ONLINE UPS · THREE-PHASE 208/120 V · VRLA

AUREON

10–30 kVA

Three-phase online double-conversion UPS with internal hot-swappable VRLA battery modules, external battery terminals and a 4.3-inch color touchscreen.



User Manual

Installation · Operation · Maintenance

AUREON 10 | AUREON 20 | AUREON 30

COPYRIGHT AND NOTICES

Copyright © 2026 AEC UPS USA LLC. All rights reserved. No part of this document may be reproduced or transmitted in any form or by any means without the prior written consent of AEC UPS USA LLC.

Trademarks. AEC and AUREON are trademarks of AEC UPS USA LLC. All other trademarks and trade names mentioned in this document are the property of their respective owners.

Notice. The products, services and features you purchase are defined by the contract between AEC and the customer; some of those described in this document may not be included in your purchase or use. Unless the contract says otherwise, all statements, information and recommendations in this document are provided “as is”, without warranties, guarantees or representations of any kind, express or implied. The information in this document may change without notice. Every effort has been made to ensure its accuracy, but nothing in it constitutes a warranty of any kind, express or implied. The illustrations are for reference: the actual product may differ slightly.

AEC UPS USA LLC
4872 SW 72nd Ave, Miami, FL 33155
Technical support, 24/7 · phone and WhatsApp: **+1 786 553 2100**
service.us@aecups.com · sales@aecups.com · aecups.com

AEC-UM-AUR-US · Rev. B · November 2026. Rev. B corrects the battery-module, environment and runtime data, sizes the breakers and conductors to the NEC, adds the FCC statement and call-out pictures of every panel, terminal block and breaker state, and removes factory references and lithium text.

BEFORE YOU START

About this manual

Thank you for choosing an AEC AUREON UPS. This manual describes the AUREON 10–30 kVA three-phase online UPS with VRLA batteries: safety, the front and rear panels, communication, planning, installation, the battery modules, the touchscreen, operation, network monitoring, maintenance, troubleshooting, transport and storage, and the specifications. Read it before you start, and keep it near the UPS.

MODELS COVERED
AUREON 10 (10 kVA / 10 kW), AUREON 20 (20 kVA / 20 kW) and AUREON 30 (30 kVA / 30 kW), three-phase 208/120 V, 4-wire, with internal VRLA battery modules and/or an external battery cabinet. Ordering codes: Table 2-1.

WHO THIS MANUAL IS FOR
Qualified electricians install and wire the UPS. Trained service personnel commission and service it. Operators use the touchscreen every day; only authorized personnel change the settings.

Safety messages

Safety messages in this manual follow ANSI Z535.6. The signal word tells how serious the hazard is:

DANGER	A hazardous situation which, if not avoided, **will** result in death or serious injury.
WARNING	A hazardous situation which, if not avoided, **could** result in death or serious injury.
CAUTION	A hazardous situation which, if not avoided, could result in minor or moderate injury.
NOTICE	Information about practices that could damage the equipment, lose data, reduce performance or give unexpected results — not related to injury.

Other conventions

i NOTE Additional information that stresses or completes the text.

✓ TIP A hint that helps you solve a problem or save time.

Keys are shown like [ON]; menus like **Settings › Battery**. Numbers in red circles on a picture are explained in the list under it. Cross-references in red are links in the PDF.

QUICK START

Up and running in seven steps

The short version — each step points to the full instructions. Read the safety chapter first.

1. **Plan the site.** Indoors, 23–104 °F (−5 to +40 °C), at least 12 in (300 mm) free behind and beside the UPS, floor rated for the weight. Section 4.3, page 24.
2. **Size the protection** for the input, bypass, battery and output to the NEC: breakers at 125 % of the current, conductors at 75 °C. Section 4.4, page 24.
3. **Unpack and place the UPS** with a forklift or pallet jack, anchor it and lower the leveling feet. Section 4.5, page 26, Section 4.6, page 28.
4. **Fit the battery modules** from the bottom up, or remove the transport ties of factory-fitted ones. Section 4.7, page 30.
5. **Wire it:** ground first, then input, bypass, output and any external battery; plug in the battery plug-ins last. Section 4.8, page 32.
6. **Check** the wiring and the neutral-to-ground voltage (below 5 V AC). Section 6.2, page 57.
7. **Start:** close the breakers, press both ON keys for 1 s, and charge the battery for 10 hours before you rely on the full runtime. Section 6.3, page 58.

3-level	40–80	4.3 in	3 + 2 years
IGBT inverter, up to 94 % efficiency	internal 12 V 9 Ah VRLA blocks, 2 to 4 modules	color touchscreen	warranty, UPS + VRLA batteries

CONTENTS

Contents

1 Safety 7
1.1 General 7
1.2 Operation and maintenance safety 8
1.3 Operating environment 8
1.4 Standards 9

2 Product overview 10
2.1 Introduction 10
2.2 Models and ordering codes 10
2.3 Key features 10
2.4 Front view 11
2.5 Operation panel 13
2.6 Rear panel 14
2.7 Communication 16
2.8 How AUREON works 19

3 Planning the installation 22
3.1 Sizing the load 22
3.2 Estimating the runtime 22
3.3 Running on a generator 22

4 Installation 23
4.1 Before you install 23
4.2 Tools 23
4.3 Site and space 24
4.4 Breakers and cables 24
4.5 Transport and unpacking 26
4.6 Mounting the UPS 28
4.7 Installing the battery modules 30
4.8 Electrical connection 32

5 Touchscreen operation 41
5.1 Menu structure 41
5.2 Main page 42
5.3 Login 44
5.4 Information management 45
5.5 Settings 47
5.6 Current faults 55
5.7 Buzzer 55
5.8 Turning on and off from the touchscreen 56

6 Operation 57
6.1 Breaker states 57
6.2 Before starting 57
6.3 Starting the UPS 58
6.4 Starting on battery (cold start) 58
6.5 Shutting down the UPS 58
6.6 Maintenance bypass 59
6.7 Emergency power off (EPO) 59
6.8 Parallel system 59

7 Troubleshooting 61

8 Network monitoring 63

8.1 The SNMP-L card 63

8.2 AEC monitoring software 63

9 Maintenance 64

9.1 Routine maintenance 64

9.2 Maintenance schedule 64

9.3 Battery care 64

9.4 Replacing a battery module 65

9.5 Component life 65

10 Packaging, transport and storage 66

10.1 Packaging 66

10.2 Transport 66

10.3 Storage 66

A Technical specifications 67

B Runtime 69

C Drawings 70

D Acronyms and abbreviations 74

E Frequently asked questions 75

F Installation record 76

01

CHAPTER 1

Safety

Read this chapter before you install, operate or service the UPS. It collects the hazards of the AUREON and the precautions that keep people and equipment safe. Safety messages also appear in the chapters where each task is described.

⚠ WARNING · IMPORTANT SAFETY INSTRUCTIONS — SAVE THESE INSTRUCTIONS

This manual contains important instructions for the AUREON 10–30 kVA UPS and its batteries that must be followed during installation and maintenance.

1.1 General

Follow all instructions and observe every DANGER, WARNING and CAUTION message in this manual and on the unit. These messages add to — they do not replace — the electrical codes and safety rules in force where the UPS is installed: in the US, the National Electrical Code (NFPA 70) and local requirements.

NOTICE

AEC accepts no liability for damage caused by failing to follow general safety practice or the safety standards for the design, manufacture and use of the equipment.

1.1.1 Electrical safety

⚠ DANGER

Hazardous voltage and high temperature inside. Comply strictly with all warnings and instructions on the UPS and in this manual.

⚠ WARNING

- In case of fire, use a dry-chemical (powder) extinguisher. A liquid extinguisher can cause electric shock.
- Do not let liquids or foreign objects enter the UPS.
- Ground the UPS properly. Connect the ground conductor first.

NOTICE

This UPS is an EMC category C3 product (IEC 62040-2). In a residential environment it may cause radio interference; the user must take measures to prevent it. See also the FCC statement in Section 1.4.1.

1.1.2 Battery safety

The AUREON battery is a valve-regulated lead-acid (VRLA) battery: 12 V 9 Ah blocks in internal battery modules, and an optional external battery cabinet. Each module, and each external string, is 20 blocks connected as a split string: ±120 V DC to the center point (BATT. N), 240 V DC between BATT. + and BATT. −. This voltage is lethal.

⚠ CAUTION

Use only the specified battery. A battery that is not specified can damage the UPS.

⚠ WARNING

- Only authorized, qualified personnel may install or replace batteries. Remove watches, bracelets, rings and other conductive objects. Wear rubber-soled shoes and rubber gloves, and use tools with insulated handles.
- Do not place tools or other conductive objects on the battery.
- Never short-circuit the battery terminals or connect them with reversed polarity: this can cause fire or electric shock.
- Disconnect the charging source before you connect or disconnect the battery terminals: unplug the battery plug-in of the module, or open the breaker of the external cabinet.
- Use only batteries of the same type, model and manufacturer.
- Keep the battery away from flames and from electrical equipment that can produce sparks.
- Each battery module weighs 99–132 lb (45–60 kg). Two people or a lifting aid are needed.

⚠ WARNING · Sulfuric acid

Do not open or damage a battery. The electrolyte contains sulfuric acid, which harms skin and eyes. If you touch it, rinse at once with plenty of water and seek medical attention. Replace a swollen, leaking or damaged block at once.

1.1.3 Electrostatic discharge (ESD)

⚠ CAUTION

Static electricity from the human body can damage sensitive components on the circuit boards. Before you touch them, wear an anti-static wrist strap with its other end properly grounded.

1.2 Operation and maintenance safety

⚠ DANGER

- Only authorized, qualified personnel may open the UPS cabinet. Opening it can cause electric shock, and damage caused by unauthorized opening is not covered by the warranty.
- Before you move, rewire or service the UPS, disconnect every power source — AC input, bypass and battery (battery plug-ins and external battery breaker) — so the UPS is isolated. Wait at least 10 minutes after it is fully off before you work on it: the output and the internal capacitors can still be live. Check with a voltmeter.
- When you remove a fan, keep fingers and tools away from the moving blades.

1.3 Operating environment

⚠ DANGER

Do not install or operate the UPS where flammable or explosive gas or smoke is present.

- Keep the UPS out of direct sunlight, rain and damp locations. Do not install it outdoors.

- Operating temperature: 23–104 °F (−5 to +40 °C); relative humidity 0–95 %, non-condensing. Recommended: 68–77 °F (20–25 °C), about 50 % relative humidity.
- Place the UPS on a flat floor, free from vibration, tilted no more than 5°.
- Keep it well ventilated: leave 12–20 in (300–500 mm) between the rear or the sides of the UPS and walls or other equipment (Section 4.3). Poor ventilation raises the internal temperature and shortens the life of the components and of the UPS.
- Altitude: up to 6,560 ft (2,000 m). Above 6,560 ft, derate the output power according to IEC 62040-3.
- Keep away dust, volatile gas, corrosive material and salt air. Never install the UPS where conductive (metallic) dust is present.

i NOTE Battery life depends on temperature and on the number of discharges: long periods at high temperature and deep discharges shorten it. VRLA batteries last longest at about 77 °F (25 °C).

1.4 Standards

The UPS is listed to UL 1778 (UL certificate E543003). It is designed according to the following standards.

TABLE 1-1 Design standards

Standard	Subject
UL 1778	Uninterruptible power systems — safety (North America); listed, UL certificate E543003
IEC 62040-1	UPS — general and safety requirements
IEC 62040-2	UPS — electromagnetic compatibility (EMC), category C3
IEC 62040-3	UPS — performance and test requirements
IEC 61000-3-12	Harmonic currents, equipment of 16 A to 75 A per phase
IEC 61000-3-11	Voltage fluctuations and flicker
IEC 61000-4-2	Immunity to electrostatic discharge
IEC 61000-4-3	Immunity to radiated electromagnetic fields
IEC 61000-4-4	Immunity to electrical fast transients / bursts
IEC 61000-4-5	Immunity to surges
IEC 61000-4-6	Immunity to conducted disturbances
IEC 61000-4-8	Immunity to power-frequency magnetic fields
IEC 63000	Restriction of hazardous substances (RoHS) — technical documentation
FCC Part 15	Radio-frequency emissions, Class A (Section 1.4.1)
NFPA 70 (NEC)	Installation: branch circuits and feeders, conductors, working space, battery systems

1.4.1 FCC statement

This equipment has been tested and found to comply with the limits for a Class A digital device, pursuant to Part 15 of the FCC Rules. These limits are designed to provide reasonable protection against harmful interference when the equipment is operated in a commercial environment. This equipment generates, uses and can radiate radio-frequency energy and, if not installed and used in accordance with this manual, may cause harmful interference to radio communications. Operation of this equipment in a residential area is likely to cause harmful interference, in which case the user will be required to correct the interference at his own expense.

CHAPTER 2

02 Product overview

What AUREON is, the models and ordering codes, the front, the operation panel, the rear panel, the communication ports and how the UPS works.

2.1 Introduction

AUREON is a high-frequency, online double-conversion three-phase UPS with intelligent control and internal hot-swappable VRLA battery modules. It also connects to an external battery cabinet. It protects file and enterprise servers, workstations, network and telecom equipment, data centers and other loads that need clean, continuous power — in finance, networks, trading, oil and gas, industry, utilities and automotive.

AUREON has a three-phase input and a three-phase output (3-in / 3-out): 208 V line-to-line, 120 V line-to-neutral, 60 Hz, with neutral and ground (3 phases + N + PE). The model name gives the rating: AUREON 10, 20 and 30 (kVA, with output power factor 1: kVA = kW).

2.2 Models and ordering codes

The frame is ordered without batteries (for an external battery, or for battery modules bought separately) or with internal VRLA battery modules. **Every frame has four module positions.** Each battery module holds 20 blocks of 12 V 9 Ah, connected as one split string (10 + 10), and weighs 99–132 lb (45–60 kg). The modules work in parallel: more modules give a longer runtime at the same voltage.

TABLE 2-1 AUREON models and ordering codes

Model	Rating	Frame (no batteries)	Factory configurations with internal VRLA batteries
AUREON 10	10 kVA / 10 kW	AUR-10 — takes 2 to 4 battery modules (40 to 80 blocks)	AUR10-40X9A (40 blocks, 2 modules) · AUR10-80X9A (80 blocks, 4 modules)
AUREON 20	20 kVA / 20 kW	AUR-20 — takes 3 or 4 battery modules (60 or 80 blocks)	AUR20-60X9A (60 blocks, 3 modules) · AUR20-80X9A (80 blocks, 4 modules)
AUREON 30	30 kVA / 30 kW	AUR-30 — takes 4 battery modules (80 blocks)	AUR30-80X9A (80 blocks, 4 modules)

How to read the code. AUR20-60X9A means AUREON 20 (AUR20) with 60 blocks of 12 V 9 Ah (60X9), that is three modules. A frame without batteries is AUR-10, AUR-20 or AUR-30.

Optional accessories: the parallel kit (PAR-KIT-AUR, parallel card with a 6.6 ft (2 m) cable), the SNMP-L network card, the dry-contact card and the Modbus protocol card (Section 2.7.1), and external battery cabinets.

2.3 Key features

- **Fully digital control.** The UPS detects the utility frequency and adapts to it. The output voltage can be set to 190, 200, 208 or 220 V line-to-line (208 V for the US).
- **High efficiency.** A three-level inverter and power-factor correction give a clean sine wave, up to 94 % efficiency online and an input power factor of 0.99 or more.
- **Smart fan control.** The fan speed follows the load: longer fan life, less noise.
- **ECO mode.** With good utility power the load runs on the bypass at up to 98 % efficiency; if the bypass leaves its window, the UPS transfers to the inverter.

- **Wide input window.** At light load the UPS stays on utility power down to 70 V line-to-neutral without using the battery, so the battery stays fully charged and is cycled less.
- **Internal battery.** Up to four hot-swappable VRLA battery modules inside the cabinet, plus terminals for an external battery cabinet for longer runtime.

2.4 Front view



1	Touchscreen and operation panel (Section 2.5)	9	Front door with key lock
2	Upper front grille: air in (front-to-rear cooling)	10	Casters and leveling feet
3	Battery module 1 — bottom position, fit first	11	Touchscreen, 4.3-inch color
4	Battery module 2	12	Status indicators (five)
5	Battery module 3	13	ON keys (press both together)
6	Battery module 4 — top position	14	OFF keys (press both together)
7	Battery plug-in of each module (one per module)	15	EPO button (red)
8	Module handle		

FIGURE 2-1 Front — door open, AUREON 30 with four battery modules (left); upper front with the door closed (right)

Behind the front door are the battery modules: two to four, fitted from the bottom up (Section 4.7). Empty positions are closed with cover plates. The plug-in on each module connects it to the UPS; unplug it before you work on a module.

Figure 2-2 shows the closed cabinet from the outside, from the AEC 3D model of the 10–30 kVA frame.

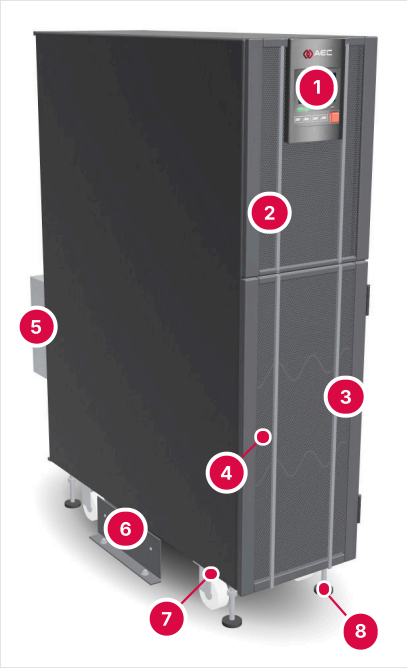

1	Touchscreen and operation panel (Section 2.5)
2	Upper front grille: air in
3	Front door of the battery compartment
4	Door lock
5	Wiring box at the rear (Section 4.8.2)
6	Support plate
7	Caster
8	Leveling foot

FIGURE 2-2 AUREON cabinet, door closed — illustration from the AEC 3D model of the frame

2.5 Operation panel

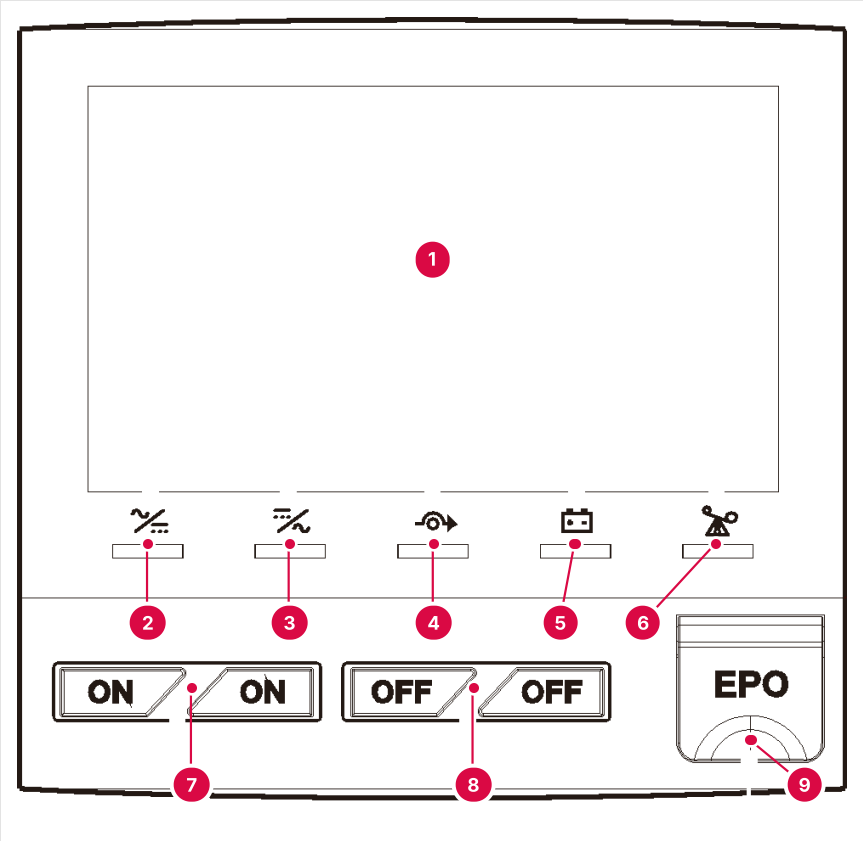

1 Touchscreen
2 AC/DC indicator
3 DC/AC indicator
4 BYP. indicator
5 BATT. LOW indicator
6 OVERLOAD indicator
7 ON keys (two)
8 OFF keys (two)
9 EPO button

FIGURE 2-3 Operation panel under the touchscreen

TABLE 2-2 Operation panel

No.	Name	Function
1	Touchscreen	Shows the operating status, the measurements, the alarms and the settings (Chapter 5).
2	AC/DC indicator	Green: rectifier normal. Red: rectifier fault.
3	DC/AC indicator	Green: inverter normal. Red: inverter fault.
4	BYP. indicator	Green: load on bypass. Red: bypass fault.
5	BATT. LOW indicator	Red: battery low.
6	OVERLOAD indicator	Red: output overload, or overload protection active.
7	ON (two keys)	Press both ON keys together for 1 s to turn the UPS on.
8	OFF (two keys)	Press both OFF keys together for 1 s to turn the UPS off.
9	EPO (emergency power off)	Press to cut the UPS output immediately (Section 6.7).

2.6 Rear panel

The rear panel holds the communication ports, the four breakers and, behind the wiring cover, the terminal blocks. Figure 2-4 shows the real panel and names each part of the upper half; Figure 2-5 shows the wiring box.

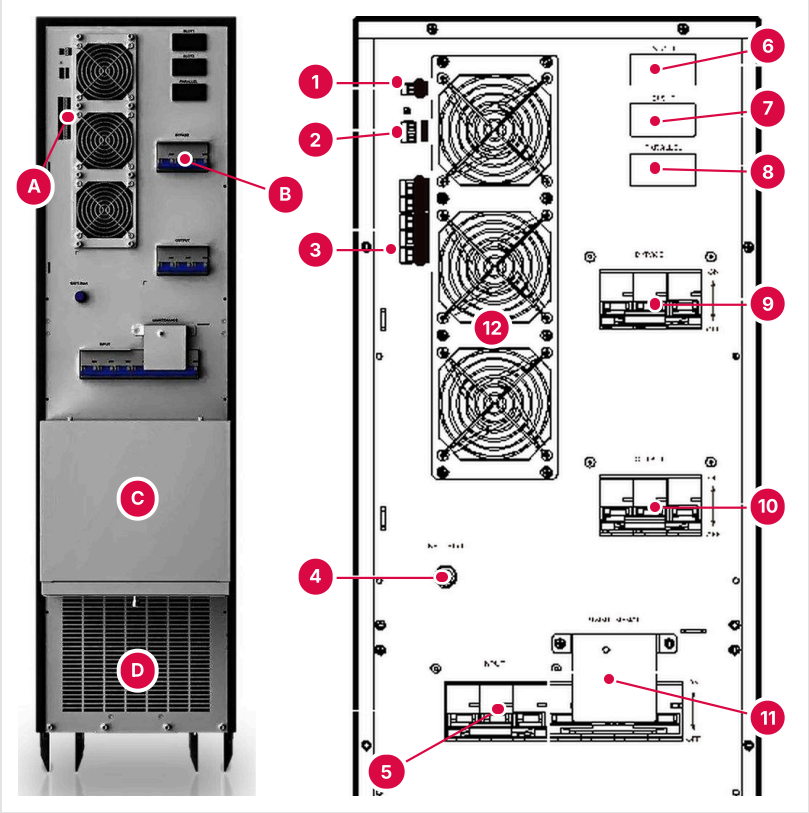

- **A** Communication ports and dry contacts; card slots at the top right
- **B** Breakers
- **C** Wiring cover over the terminal blocks (Figure 2-5)
- **D** Air outlet grille
- **1** RS-485 port (Section 2.7.2)
- **2** EPO + input dry contact IN.1 (Section 2.7.3)
- **3** Output dry contacts OUT.1–OUT.5
- **4** BATT. Start button (cold start, Section 6.4)
- **5** **INPUT** breaker — utility input to the rectifier
- **6** SLOT1 — intelligent slot 1 (SNMP card)
- **7** SLOT2 — intelligent slot 2 (optional card)
- **8** PARALLEL — parallel port
- **9** **BYPASS** breaker — bypass input
- **10** **OUTPUT** breaker — to the load
- **11** **MAINTENANCE** breaker, under its cover (normally OFF)
- **12** Cooling fans: air out

FIGURE 2-4 Rear of the UPS with the wiring cover fitted (left), and the upper part of the rear panel — communication ports and breakers (right)

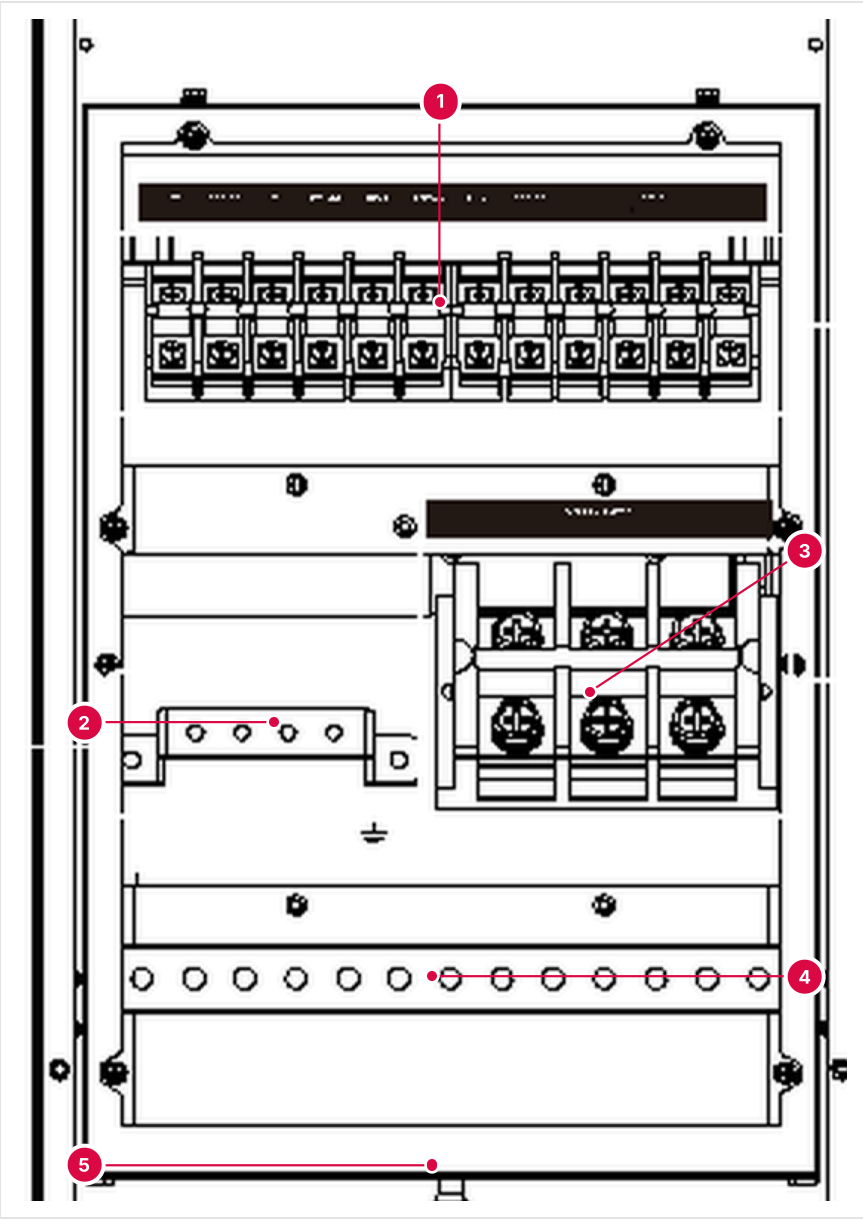

1. AC terminal block: INPUT, BYPASS and OUTPUT A, B, C, N (Figure 4-24)
2. PE ground bar
3. DC terminal block: EXTERNAL BATTERY +, N, – (Figure 4-25); keep its plastic cover on
4. Cable tie bar: tie the cables in four bundles
5. Bottom plate of the wiring box: cable entry holes

FIGURE 2-5 Rear panel, lower part — wiring box with the wiring cover removed

Battery start (cold start). The BATT. Start button (item 4) starts the UPS from the battery when there is no utility power. See Section 6.4.

Door switch of the maintenance bypass. A switch behind the cover of the maintenance breaker opens when the cover is removed and closes again when the cover is refitted. When it opens, the UPS turns its inverter off and transfers the load to bypass, so the maintenance breaker can be closed safely. The procedure is in Section 6.6.

2.7 Communication

The UPS communicates through the RS-485 port, the dry contacts and the parallel port as standard, and through optional cards in the two intelligent slots.

TABLE 2-3 Standard communication ports

Method	Port (Figure 2-4)
RS-485	RS-485 port, item 1
Dry contacts	Dry contact 1: output dry contacts OUT.1–OUT.5, item 3. Dry contact 2: input dry contacts EPO + IN.1, item 2
Parallel	PARALLEL port, item 8, with the parallel kit

2.7.1 Optional cards

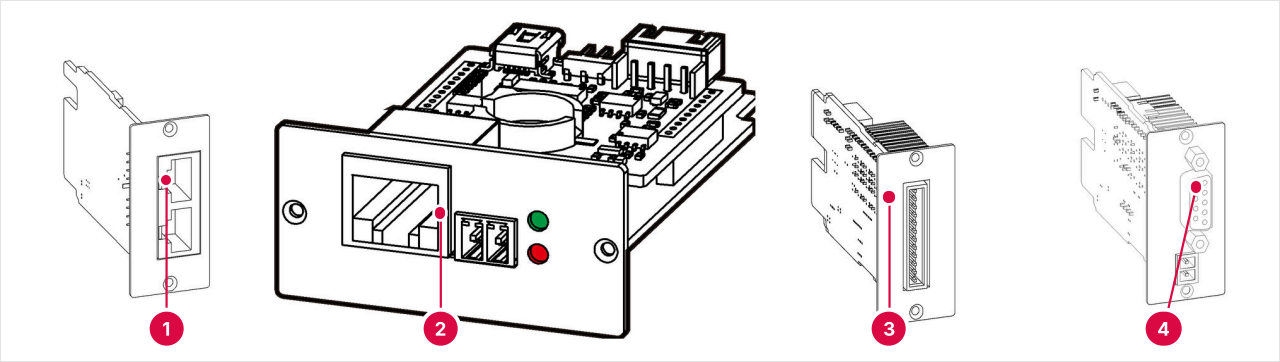

1. Parallel card (parallel kit PAR-KIT-AUR): two RJ45 parallel ports — PARALLEL port
2. SNMP-L network card: RJ45 network port — SLOT1 or SLOT2
3. Dry-contact card (Y5): terminal block — SLOT2
4. Modbus protocol card: DB9 RS-485/RS-232 port and 2-pin terminal block — SLOT2

FIGURE 2-6 Optional cards

TABLE 2-4 Optional cards

Card	Port	What it gives
Parallel kit PAR-KIT-AUR (card and 6.6 ft (2 m) cable)	PARALLEL port	Parallel operation of up to four UPS (Section 4.8.4).
SNMP-L network card	SLOT1 (standard position) or SLOT2	Network monitoring: web page, SNMP, e-mail alarms (Chapter 8). It reads the UPS over the internal RS-232 link: interface RS-232, 9600 baud, 8 data bits, 1 stop bit, no parity.
Dry-contact card (Y5)	SLOT2, one card at a time	Three output dry contacts: utility status, battery status and inverter status (configurable as bypass output status). Two inputs: battery temperature, for charge temperature compensation, and battery breaker status (configurable as remote ON/OFF).
Modbus protocol card	SLOT2, one card at a time	One RS-485 + RS-232 port (DB9; one interface at a time). Its 2-pin green RS-485 terminal block is reserved and not used with the VRLA battery of AUREON.

i NOTE

- The standard RS-485 port on the rear panel does not work while SLOT2 holds an optional card.
- See the installation guide supplied with each card for details.

2.7.2 RS-485

The UPS communicates with a PC or a building management system through its RS-485 port.

TABLE 2-5 RS-485 connection, UPS to PC

UPS RS-485 port	PC RS-485 port
A	A (+)
B	B (–)

2.7.3 Dry contacts

The dry contacts send status and alarm signals to external equipment, or receive commands from it. Set their functions on the touchscreen (Section 5.5.4).

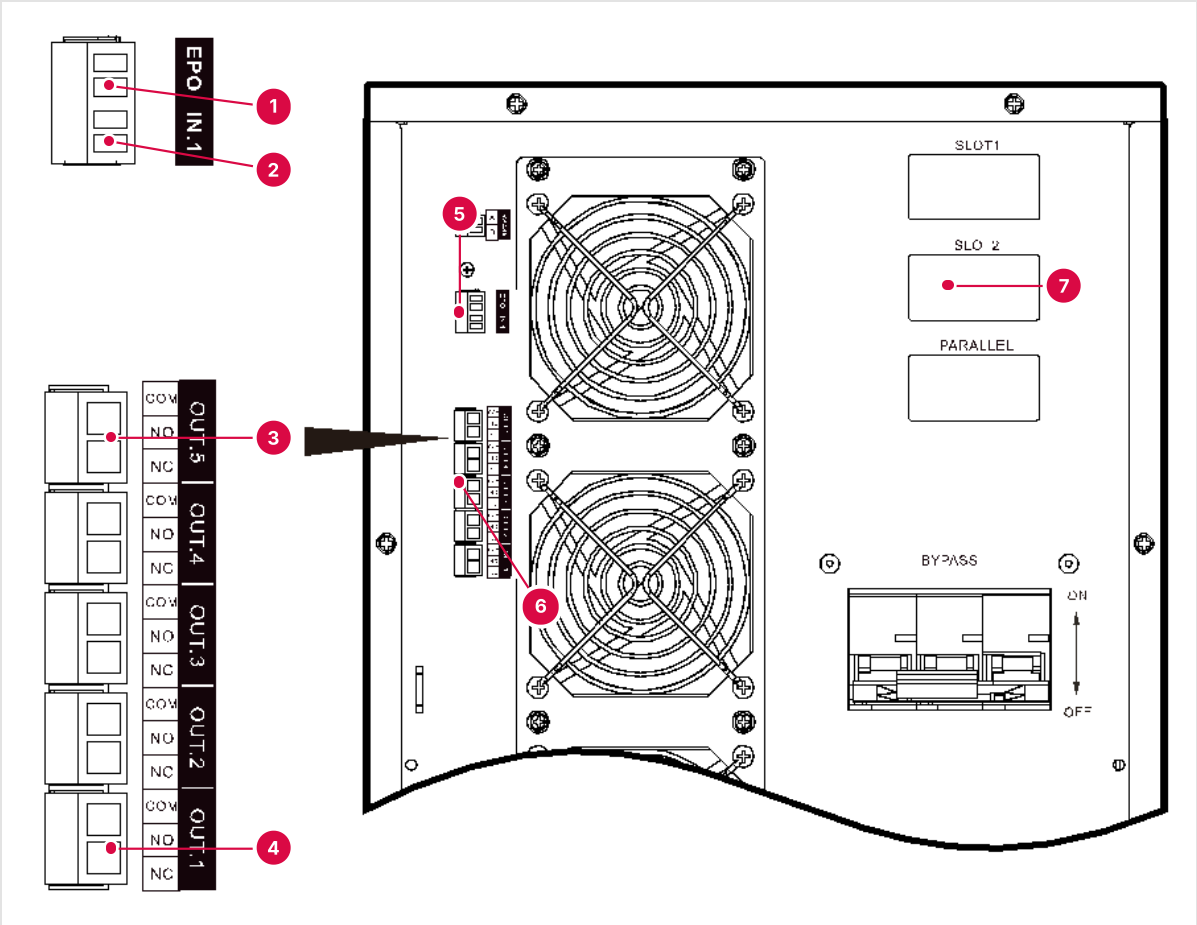

1. EPO — 2 pins: emergency power off loop, must be closed
2. IN.1 — 2 pins: programmable input
3. OUT.5 — NC, NO, COM (top) …
4. … OUT.1 — NC, NO, COM (bottom)
5. EPO + IN.1 block on the rear panel
6. OUT.1–OUT.5 block on the rear panel
7. SLOT1, SLOT2 and PARALLEL

FIGURE 2-7 Dry-contact terminal blocks — position on the rear panel and contact order

⚠ CAUTION

Relay contact rating: 277 V AC / 30 V DC, 10 A. Relay coil voltage: 12 V.

TABLE 2-6 Dry contact functions

Group	Contact	Function	Default
Dry contact 1 — outputs	OUT.1 · NC / NO / COM	When the signal is active, NO closes to COM and NC opens. Signal selectable (Table 2-8).	Utility abnormal
	OUT.2 · NC / NO / COM	As OUT.1.	Bypass abnormal
	OUT.3 · NC / NO / COM	As OUT.1.	Battery abnormal
	OUT.4 · NC / NO / COM	As OUT.1.	Output abnormal
	OUT.5 · NC / NO / COM	As OUT.1.	Overload alarm
Dry contact 2 — inputs	EPO · 2 pins	Active when the loop is opened. Fixed function (EPO), not selectable.	EPO
	IN.1 · 2 pins	Trigger level selectable (NC/NO); default: active when shorted. Signal selectable (Table 2-7).	Charging disabled

NC: normally closed · NO: normally open · COM: common.

⚠ CAUTION

The EPO input must be closed (shorted) for the UPS to run. If it is opened, the UPS shuts down both the inverter and the bypass output and the touchscreen reports an EPO fault. The fault clears after the UPS has shut down completely and the input is closed again. To use a remote EPO switch, wire a normally closed, voltage-free contact in place of the factory link on the EPO pins.

TABLE 2-7 Selectable input dry-contact signals

No.	Signal (display label)	What the UPS does when it receives it
1	Charging disabled (Charge forbidden)	Alarms and stops charging the battery.
2	External MBB on	External maintenance-bypass breaker closed: alarms, turns the inverter off and transfers to bypass.
3	External BB status	External battery breaker open: alarms and reports a fault.
4	UPS remote ON/OFF	Turns the UPS on.
5	Battery ground fault (Batt. ground fault)	Alarms and reports a fault.
6	Discharging disabled (Discharge forbidden)	Alarms and prevents the battery from discharging.

The trigger level (NO or NC) of every input signal is selectable.

TABLE 2-8 Selectable output dry-contact signals — the contact switches when the condition is true

No.	Signal	Condition
1	Mains abnormal	Utility supply abnormal.

No.	Signal	Condition
2	Bypass abnormal	Bypass supply abnormal.
3	Battery abnormal	Battery low, overvoltage, over-temperature or disconnected.
4	Output abnormal	Output abnormal.
5	Overload abnormal	Bypass or inverter overloaded.
6	General abnormal	Any UPS fault alarm.
7	Normal operation	UPS in normal operation.
8	Battery operation	UPS running on battery.
9	Bypass operation	UPS running on bypass.
10	UPS ON/OFF status	UPS on.
11	Battery low	Battery voltage low.
12	ECO mode	Output in ECO mode.
13	Fan fault	Fan abnormal.

The signal names are the labels shown on the touchscreen; "Mains" is the utility input.

2.7.4 Parallel port

The parallel kit (PAR-KIT-AUR) installs in the PARALLEL port. The UPS ships set to single mode. For parallel operation, set every UPS to the same parallel mode (redundant or expand) and give each UPS a different Parallel UPS ID (1 to 4) on the touchscreen (Section 5.5.7). Wiring: Section 4.8.4.

2.8 How AUREON works

AUREON is made of a rectifier with power-factor correction (PFC), an inverter, a battery charger (DC/DC converter) and a bypass static switch. Its inputs are the utility input, the bypass input and the battery; its outputs are the inverter output, the bypass output and the maintenance bypass (Figure 2-8; the single-line diagram with the four breakers is in Appendix C).

- With utility power present, the rectifier runs and the charger charges the battery.
- When the UPS is off and the bypass is normal, the load is fed from the bypass.
- When the UPS is on, the rectifier builds the DC bus and the inverter produces a pure sine wave: the load transfers from bypass to inverter.
- When utility power fails, the battery voltage is boosted to the DC bus and the inverter keeps feeding the load. When utility power returns, the UPS goes back to utility mode automatically.

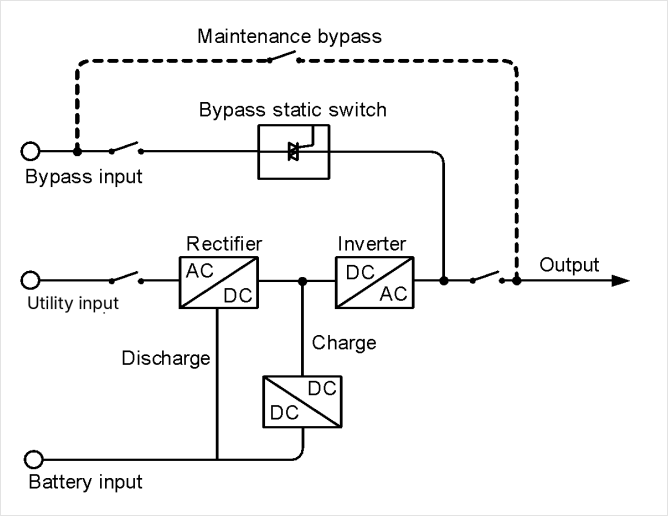

FIGURE 2-8 Block diagram

2.8.1 Operating modes

AUREON has five operating modes: normal (utility), battery, bypass, ECO and maintenance bypass. In the diagrams the thick line shows the power flow.

Normal (utility) mode. With utility power present the UPS runs on the inverter and charges the battery at the same time (Figure 2-9).

Battery mode. When utility power fails, the rectifier switches to the battery at once, boosts the battery voltage and holds the DC bus, so the inverter output continues without a break (Figure 2-10). If utility power returns before the battery is exhausted, the rectifier goes back to the utility input and recharges the battery. If the outage continues, the UPS alarms (sound and light) and runs until the battery reaches its low-voltage limit; the buzzer then sounds continuously and the load loses power. About 1 minute later the UPS switches itself off, so the battery is not drained further. When utility power returns, the UPS restarts automatically in normal mode.

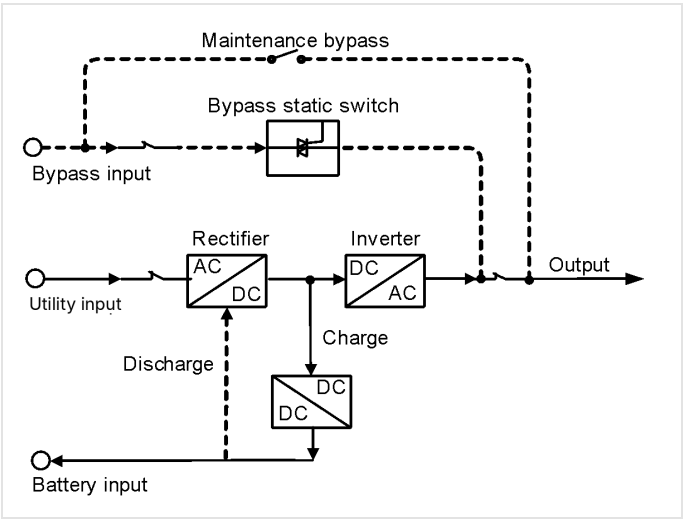

FIGURE 2-9 Normal mode

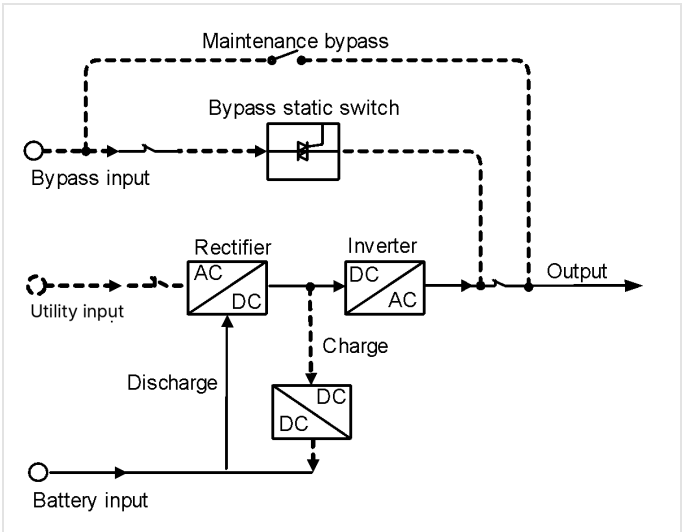

FIGURE 2-10 Battery mode

Bypass mode. With the bypass voltage normal, the load is fed from the bypass when the UPS is off, or when a fault occurs while it is on (inverter overload, overcurrent surge, IGBT over-temperature, etc.). When the fault clears, the UPS returns to the inverter. If the same fault occurs more than 5 times in a short time, the UPS stays on bypass until it is switched off manually or loses

power, the fault is removed and the UPS is restarted (Figure 2-11).

ECO mode (single UPS only). The load is fed from the bypass while the bypass voltage is normal, and transfers to the inverter when it is not. ECO is an energy-saving mode for loads that do not need the highest power quality; efficiency reaches 98 %.

Maintenance bypass mode. To service the UPS without interrupting the load, the load is moved to the maintenance-bypass breaker and the UPS is de-energized (Figure 2-12). Procedure: Section 6.6.

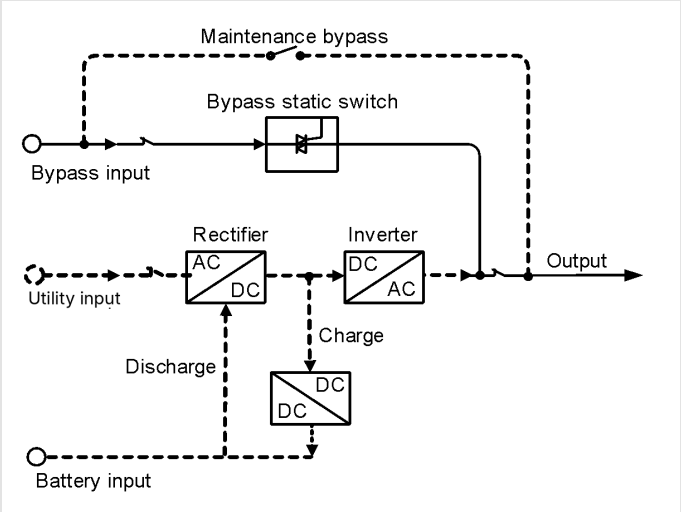

FIGURE 2-11 Bypass mode

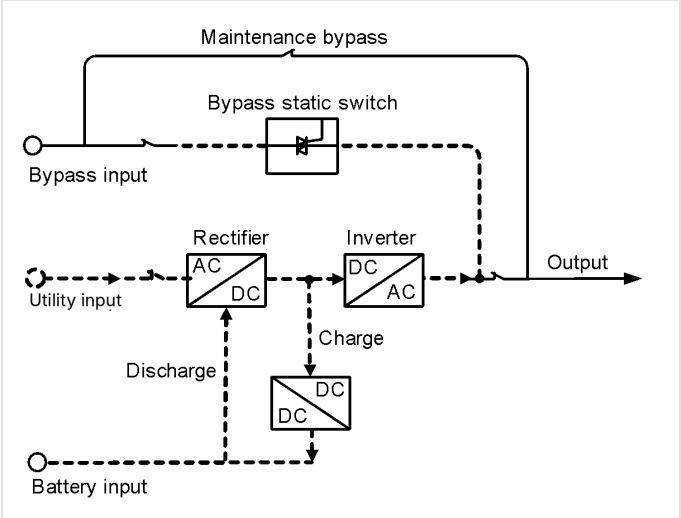

FIGURE 2-12 Maintenance bypass mode

CHAPTER 3

03 Planning the installation

Sizing the load, estimating the runtime and running on a generator — before you install.

3.1 Sizing the load

AUREON delivers up to 10, 20 or 30 kW (output power factor 1). Size the UPS on the watts (kW) the loads draw.

1. List every device that will run on the UPS.
2. Read its power in watts on the label or in the data sheet. If only volts and amps are given, multiply them (V × A): that gives VA, which is equal to or higher than the watts, so the estimate is on the safe side.
3. Add the watts and keep the total at or below 80 % of the rating: the margin covers start-up currents, growth and battery ageing.
4. Measure once the UPS runs: the output information page shows the real load (Figure 5-10).

TABLE 3-1 Worked example — AUREON 20

Load	Watts
Server racks	9,000 W
Storage	2,500 W
Network core	1,500 W
Cooling controls	1,000 W
Total	**14,000 W — 70 % of 20,000 W**

Runtime: with 60 blocks (AUR20-60X9A), about 10 minutes at 70 % load (Table B-1).

3.2 Estimating the runtime

1. Work out the load as a percentage of the rated output power.
2. Find the two load rows either side of it in Table B-1 and estimate between them.
3. Allow a margin: the runtime is shorter with batteries that are old, cold, hot or not fully charged.
4. Halving the load roughly doubles the runtime, or more.

3.3 Running on a generator

The PFC input (power factor 0.99 or more) loads a generator cleanly, and the wide input window (90–155 V line-to-neutral at full load) rides through the swings of a standby generator.

- As a general rule, choose a generator rated at least 1.5 times the UPS input power, to cover the battery recharge as well.
- Let the generator reach stable voltage and frequency before it feeds the UPS; the UPS stays on battery until the input is within range.
- If the UPS keeps returning to battery on the generator, the generator is too small or unstable.

04

CHAPTER 4

Installation

Preparing the site, the protection and the cables, moving and unpacking the UPS, anchoring it, installing the battery modules and wiring a single UPS, an external battery or a parallel system.

4.1 Before you install

⚠ WARNING

- Use insulated tools to avoid electric shock.
- The wiring terminals carry high voltage. Make sure they are de-energized before you connect any cable.
- Place the UPS on a flat, level floor.
- Do not place objects on the UPS or sit on it.

4.2 Tools

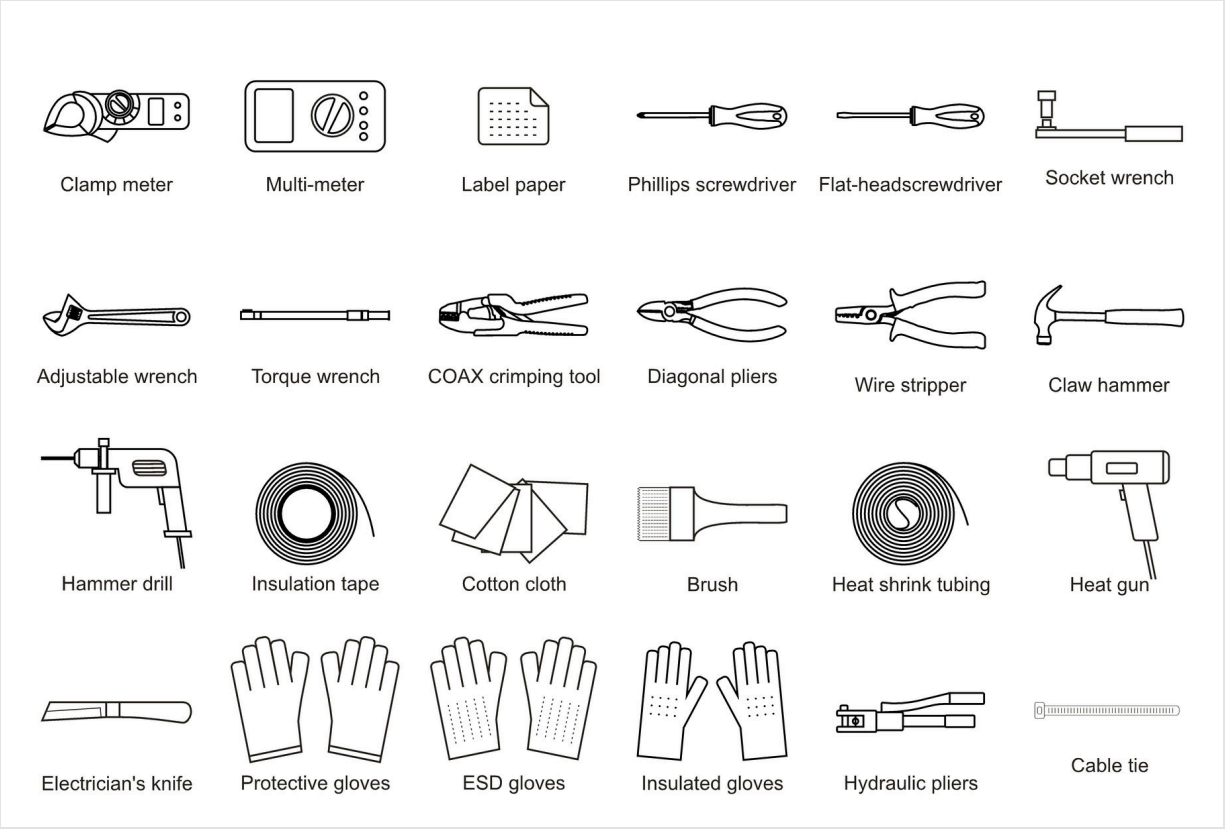

FIGURE 4-1 Tools for installation

4.3 Site and space

Install the UPS in a well-ventilated room, away from water, heat sources and flammable or explosive materials, out of direct sunlight, dust, volatile gas, corrosive substances and salt air (Section 1.3).

- **Ventilation:** leave at least 12 in (300 mm) between the rear and both sides of the UPS and any wall or other equipment. The air enters at the front and leaves at the rear (Figure C-4): do not put the rear against a wall.
- **Wiring and service at the rear:** the terminal blocks and the breakers are at the rear. The AEC installation drawing (Figure 4-2) shows at least 31.5 in (800 mm) behind the UPS and 7.9 in (200 mm) above it. Where live parts must be examined or adjusted at the rear, keep the NEC working space: at least 36 in (914 mm) deep (NEC 110.26(A)).
- **Front:** keep the front door free to open, for the battery modules.
- **Floor:** rated for the weight of the UPS with its batteries, up to 750 lb (340 kg) (Table A-1).

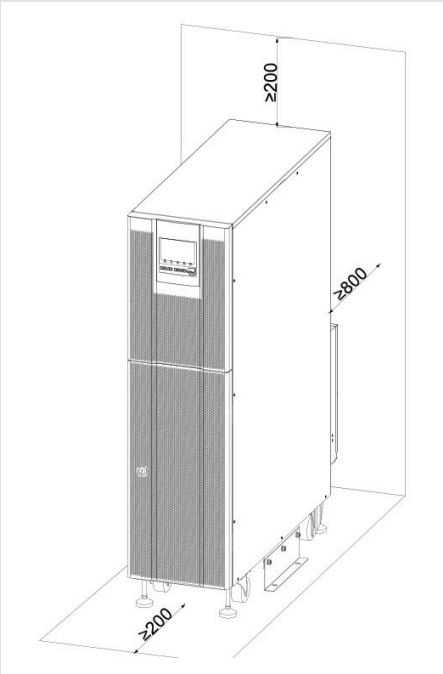

FIGURE 4-2 Clearances from the AEC installation drawing, mm: ≥ 200 above, ≥ 800 behind, ≥ 200 at the side

4.4 Breakers and cables

Size the input, bypass, output and battery breakers and cables from the maximum steady-state currents of the UPS (Table 4-1), then choose the breakers from Table 4-2 and the conductors from Table 4-3.

TABLE 4-1 Maximum steady-state current, at 208 V

Circuit	AUREON 10	AUREON 20	AUREON 30
AC input, per phase	37.0 A	75.9 A	100.0 A
Bypass input, per phase	30.3 A	60.6 A	90.9 A
DC (battery) input	45.3 A	91.6 A	137.4 A
AC output, per phase	30.3 A	60.6 A	90.9 A

4.4.1 Breakers

Install a breaker matched to the UPS rating ahead of the UPS input, to isolate it from the utility supply — preferably a breaker with a disconnect feedback (auxiliary) contact. With a separate bypass supply, the bypass input needs its own breaker. An external battery cabinet needs its own DC breaker, 3-pole (+, N, −).

- The UPS is a continuous load. Size every overcurrent device at **at least 125 % of the continuous current** (NEC 215.2, 215.3) and use the next standard rating (NEC 240.6). Table 4-2 gives this minimum and the AEC recommendation, which allows for the battery charging power and the inrush current at turn-on.
- Do not use breakers with ground-fault (leakage) protection on the UPS feeds: they can trip unnecessarily.
- AC breakers: 3-pole, rated at least 250 V AC. DC (battery) breaker: rated at least 500 V DC.

TABLE 4-2 Breakers, 3-pole — AEC recommended rating, and NEC minimum (125 %, next standard rating)

Circuit	AUREON 10	AUREON 20	AUREON 30
AC input	63 A (NEC min. 50 A)	100 A (NEC min. 100 A)	125 A (NEC min. 125 A)
Bypass input	63 A (NEC min. 40 A)	100 A (NEC min. 80 A)	125 A (NEC min. 125 A)
DC (battery) input	60 A (NEC min. 60 A)	125 A (NEC min. 125 A)	180 A (NEC min. 175 A)
AC output	63 A (NEC min. 40 A)	100 A (NEC min. 80 A)	125 A (NEC min. 125 A)

Where the AEC rating is not a US standard rating (63 A), use the next standard rating (70 A) or the NEC minimum, and size the conductors for the breaker you install.

4.4.2 Cables

⚠ *DANGER*

Failure to follow adequate grounding procedures can result in electric shock or fire. Connect the ground (PE) conductor first.

TABLE 4-3 Recommended copper conductors — AEC size (about 16 ft / 5 m, 90 °C insulation) and NEC minimum at 75 °C for the AEC breaker

Conductor	AUREON 10	AUREON 20	AUREON 30
Utility input, phases and neutral (A, B, C, N)	8 AWG — NEC 6 AWG	3 AWG — NEC 3 AWG	1 AWG — NEC 1 AWG
Bypass input, phases and neutral (A, B, C, N)	8 AWG — NEC 6 AWG	3 AWG — NEC 3 AWG	1 AWG — NEC 1 AWG
Output, phases and neutral (A, B, C, N)	8 AWG — NEC 6 AWG	3 AWG — NEC 3 AWG	1 AWG — NEC 1 AWG
DC input (BATT. +, N, −)	2 AWG — NEC 6 AWG	2 AWG — NEC 1 AWG	1/0 AWG — NEC 3/0 AWG
Ground (PE)	8 AWG	3 AWG	1 AWG
Battery cabinet ground (battery PE)	2 AWG	2 AWG	1/0 AWG

- **Use the larger of the two sizes.** The NEC size has an ampacity at 75 °C (NEC Table 310.16; terminations 75 °C, NEC 110.14(C)) at least equal to the AEC breaker of Table 4-2 (NEC 240.4). With a smaller breaker, at the NEC minimum, the conductor can be smaller accordingly; with a larger breaker it must be larger.
- The sizes are for copper, up to three current-carrying conductors in a raceway and 86 °F (30 °C) ambient. Correct them for other conditions (NEC 310.15). For runs longer than 65 ft (20 m), increase the size for voltage drop.
- The ground conductor follows NEC 250.122 for the upstream breaker; the AEC size is larger and can be used.
- Size the neutral for the load: with mainly non-linear loads (computers) the neutral current can exceed the phase current.

- In the US, the installer's calculation for the actual installation (insulation, ambient temperature, conduit fill, length) prevails over this table.

TABLE 4-4 Terminals and recommended ring terminals

Terminal	AUREON 10	AUREON 20	AUREON 30
AC input, bypass, output (A, B, C, N)	RNBS8-6 (8 AWG)	RNBS22-6 (3 AWG)	SG50-6 (1 AWG)
DC input (+, N, –)	RNBS38-10 (2 AWG)	RNBS38-10 (2 AWG)	RNB60-10 (1/0 AWG)
Ground (PE)	RNBS8-6	RNBS22-6	SG50-6

The ring terminal must fit the terminal: use crimped copper ring terminals sized for the conductor you install, within the limits of Table 4-5. Tighten the bolts to the torque for the bolt size. If you use other terminals, check their dimensions against Figure 4-3 and Table 4-5.

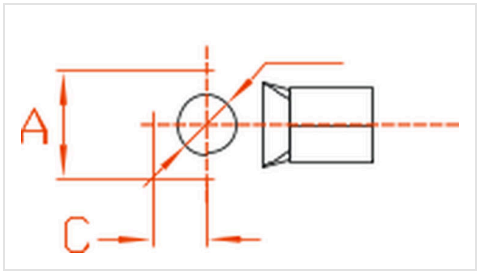

FIGURE 4-3 Ring terminal dimensions A, B, C

TABLE 4-5 Ring terminal dimension limits

Dimension	Input, bypass, output, PE	External battery
A	≤ 0.77 in (19.5 mm)	≤ 1.38 in (35 mm)
B	≥ 0.24 in (6 mm)	≥ 0.39 in (10 mm)
C	≤ 0.47 in (12 mm)	≤ 0.73 in (18.5 mm)

i NOTE The cables supplied by AEC meet national standards or carry UL certification. For lengths under 1.6 ft (0.5 m), a cable slightly smaller than the recommended size can be used.

4.5 Transport and unpacking

4.5.1 Transport

⚠ *CAUTION*

- The UPS must be moved by trained personnel.
- Move it gently; avoid impacts and drops. Keep it upright; do not set it down or lift it abruptly.
- If the UPS will be stored for a long time after unpacking, repack it in its original plastic bag.

Move the UPS with a forklift or a pallet jack. Center the UPS on the forks and move slowly and steadily (Figure 4-4, Figure 4-5).

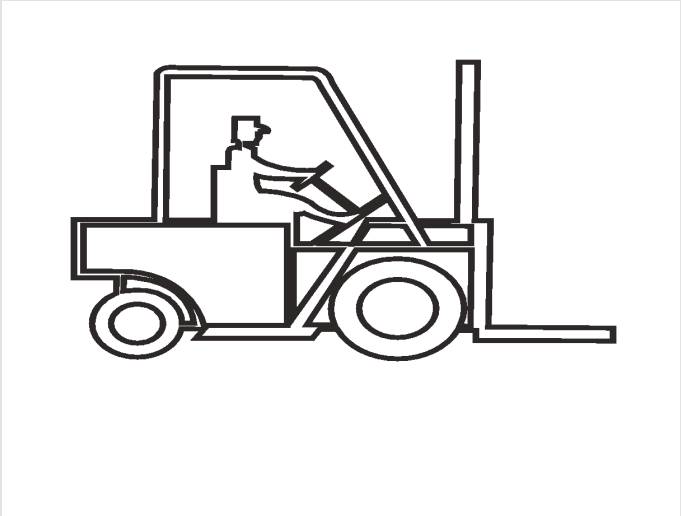

FIGURE 4-4 Moving with a forklift

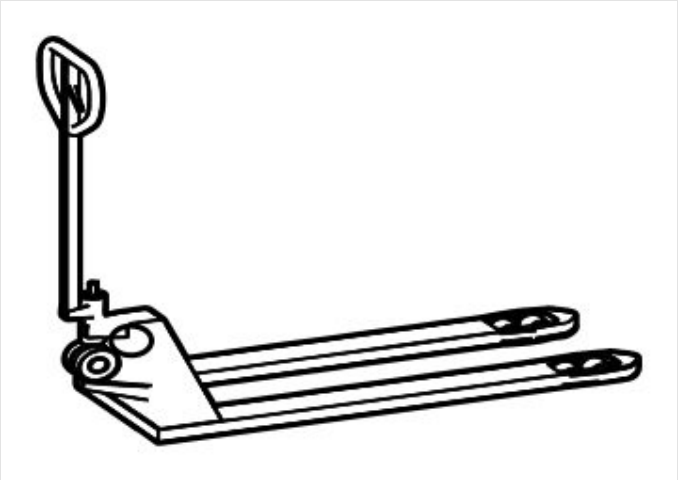

FIGURE 4-5 Moving with a pallet jack

4.5.2 Unpacking

i NOTE Choose the unpacking place in advance, as close as possible to the installation site.

1. Check the packaging for transport damage. If it is damaged, notify the carrier immediately.
2. Move the UPS to the installation site.
3. Remove the outer packaging and take out the accessories.
4. Inspect the UPS for transport damage (notify the carrier of any damage), and check the accessories against the packing list. If anything is missing or wrong, note it and contact AEC.
5. Lower the front panel of the pallet to form a ramp (Figure 4-6).
6. Remove the bolts that fix the UPS and its support plates to the wooden pallet (Figure 4-6, circled), and remove the support plates.
7. Slowly roll the UPS down the ramp to the floor.

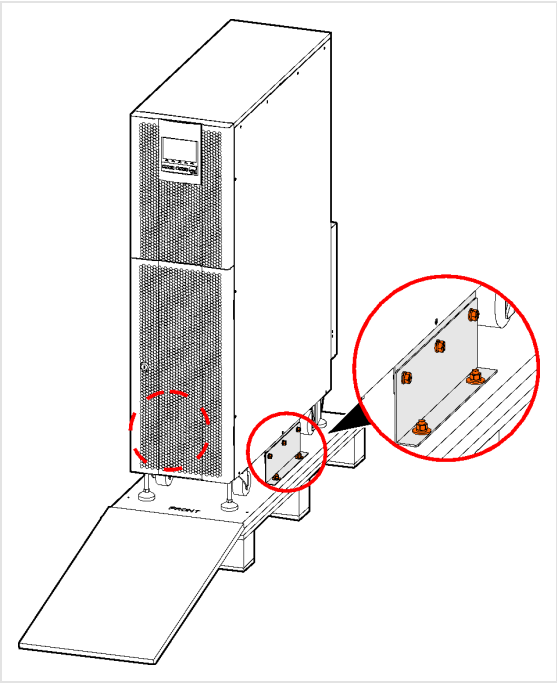

FIGURE 4-6 Pallet ramp and fixing bolts (circled)

⚠ CAUTION

Two people are needed to move the UPS, one on each side, to keep it from tipping and to avoid injury.

4.6 Mounting the UPS

i NOTE This section describes anchoring the UPS to the floor. Adapt the procedure to the site.

1. Plan the position from the UPS dimensions (Figure 4-7) and the clearances in Section 4.3.
2. Drill four 0.39 in (10 mm) holes in the floor with a hammer drill, at the positions of the mounting holes of the support plates (Figure 4-8; tolerance ±0.08 in / ±2 mm), and fit M8 expansion anchors (Figure 4-9).
3. Move the UPS over the holes. Fit the support plates loosely (one-third to two-thirds of the screws, not tightened) and align their holes with the anchors.
4. Fit the M8 flat washers, spring washers and bolts. Tighten the anchor bolts, then the six screws of the support plates.
5. Lower the leveling feet (counterclockwise) until they rest on the floor and carry part of the load (Figure 4-10). Lock the casters.

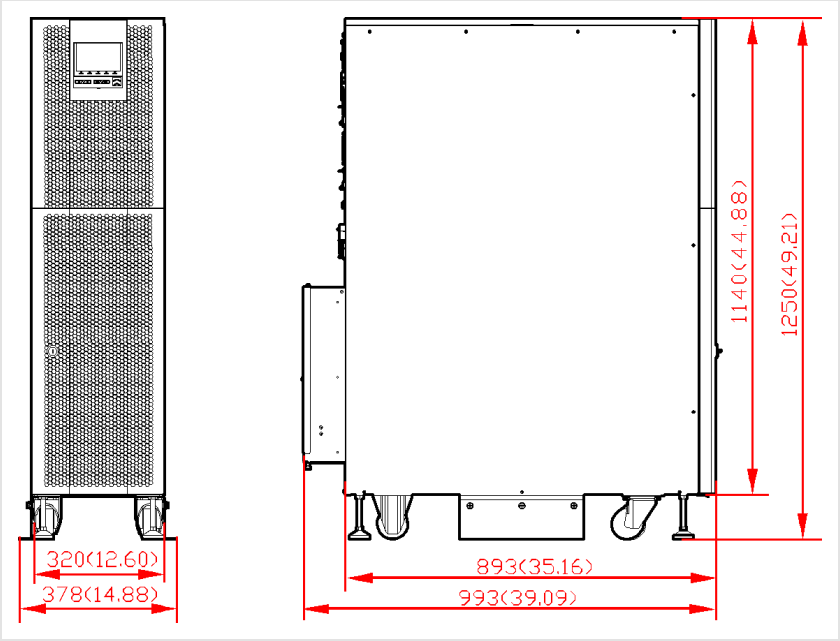

FIGURE 4-7 Dimensions, mm (in): 320 mm (12.6 in) cabinet, 378 mm (14.9 in) over the support plates, 1,250 mm (49.2 in) high

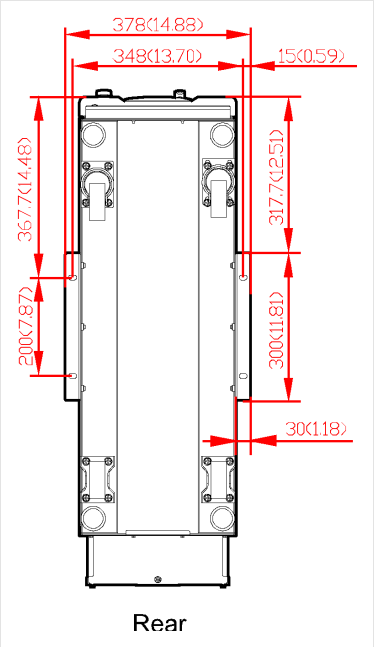

FIGURE 4-8 Mounting holes of the support plates, bottom view, mm (in)

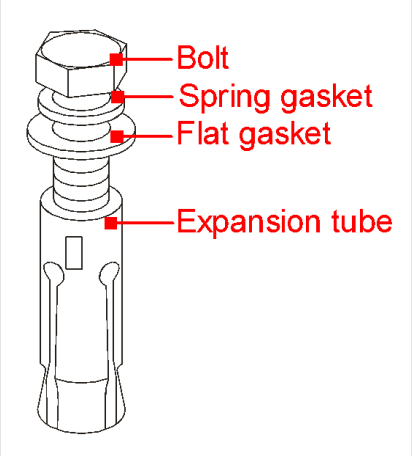

FIGURE 4-9 M8 expansion anchor: bolt, spring washer, flat washer, expansion sleeve

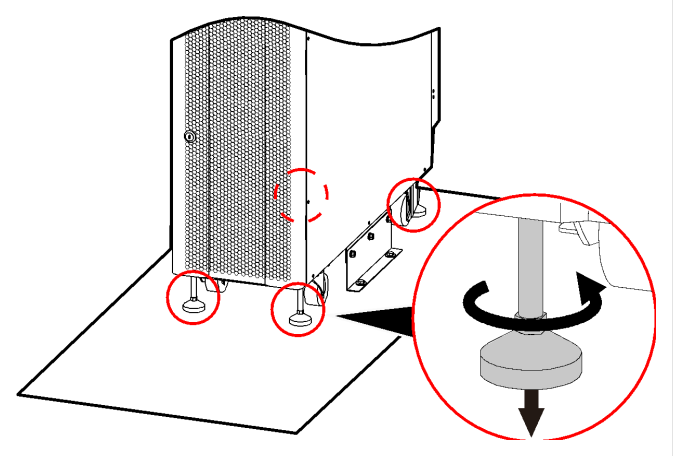

FIGURE 4-10 Lowering the leveling feet

Fitting the anchors. Drill the hole; drive the anchor in vertically with a rubber hammer until the sleeve is fully in the hole; pre-tighten the anchor; remove the bolt, spring washer and flat washer, and refit them through the support plate. The exposed height of the anchor must not exceed 2.0 in (50 mm).

i NOTE Turn the feet clockwise to raise them and counterclockwise to lower them. Adjust all four feet together, never one alone, so the UPS does not tilt.

⚠ *CAUTION*

Move the UPS steadily and keep it from tilting.

4.7 Installing the battery modules

> **⚠ CAUTION**
>
> Each lead-acid battery module weighs 99–132 lb (45–60 kg). Follow the handling regulations; use two people or a lifting aid. Install the modules from the bottom up.

TABLE 4-6 Number of battery modules

Model	Battery modules	Positions (Figure 4-15)
AUREON 10	2 to 4 (2 as standard)	Bottom two, then upward
AUREON 20	3 or 4 (3 as standard)	Bottom three, then the top one
AUREON 30	4	All four

4.7.1 UPS ordered without internal batteries

Follow these steps to fit battery modules. If the UPS was supplied with its batteries installed, see Section 4.7.2.

1. Insert the key and turn it clockwise to open the front door.
2. Remove the screws and the plug-in on the cover plate of the position (Figure 4-11).
3. Remove the screws and the cover plate (Figure 4-12).
4. Slide the battery module into the UPS (Figure 4-13).
5. Tighten the screws to secure the battery module (Figure 4-14).
6. Repeat for the next position upward. Leave the plug-ins unplugged: plug them in only after the wiring is complete (Section 4.8, step 8).

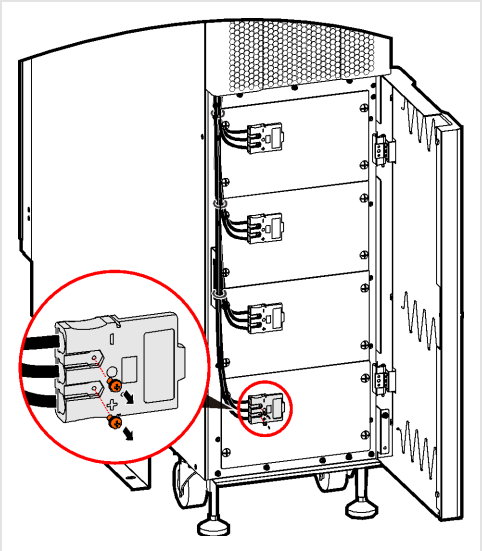

FIGURE 4-11 Step 2 — remove the plug-in on the cover plate

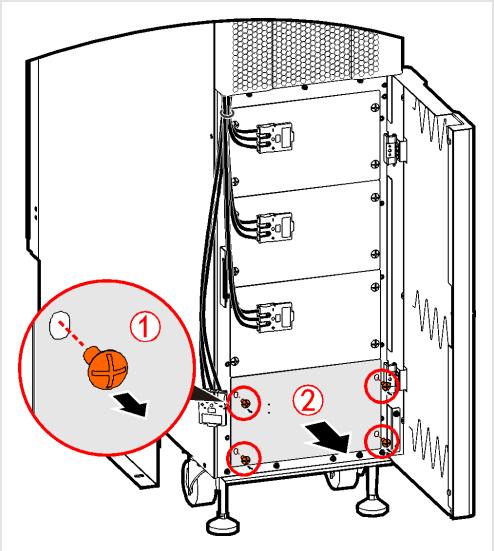

FIGURE 4-12 Step 3 — remove the cover plate

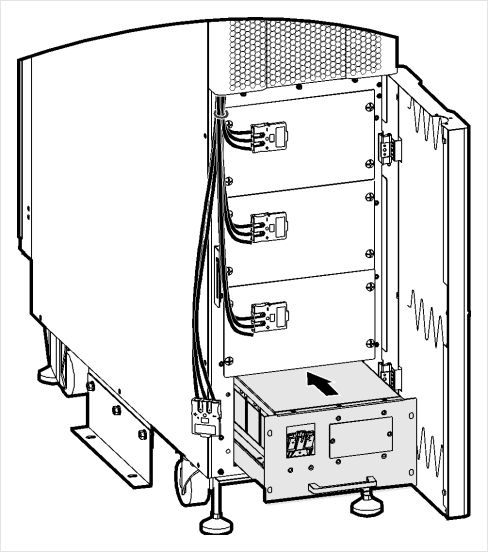

FIGURE 4-13 Step 4 — slide the module in

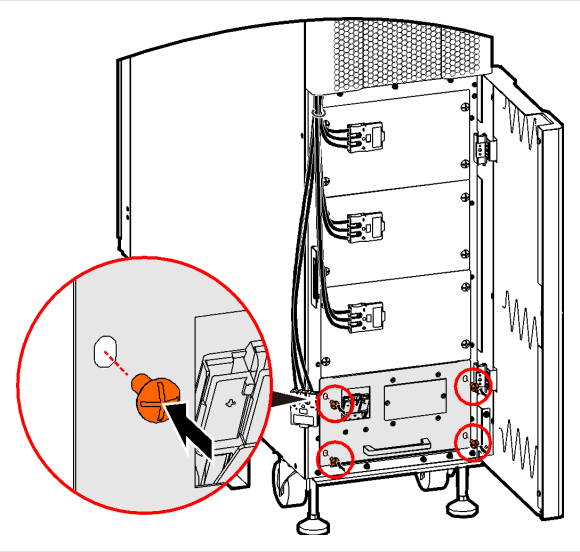

FIGURE 4-14 Step 5 — fix the module with its screws

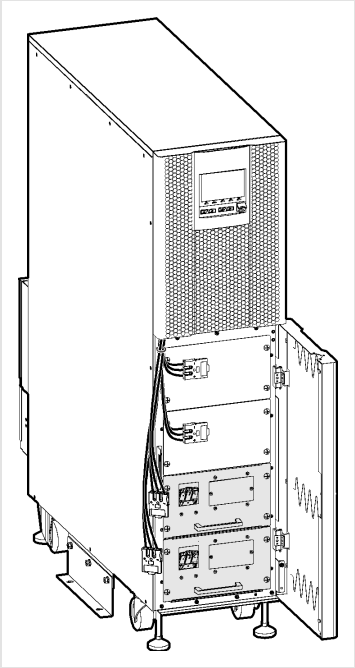

FIGURE 4-15 AUREON 10 — two modules, bottom positions

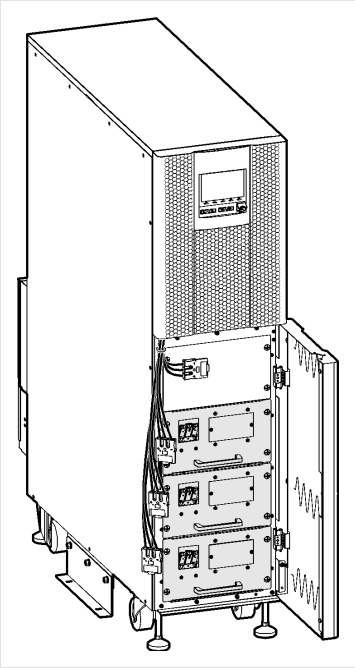

FIGURE 4-16 AUREON 20 — three modules

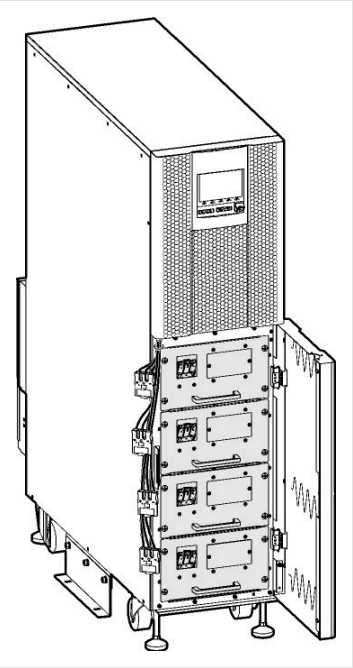

FIGURE 4-17 AUREON 30 — four modules

4.7.2 UPS supplied with internal batteries

Before you connect the plug-ins, remove the cable ties that hold the battery-module handles for transport: press and hold the release tab of each tie to free it. Figure 4-18 shows the ties on an AUREON 30; the actual number of ties may differ.

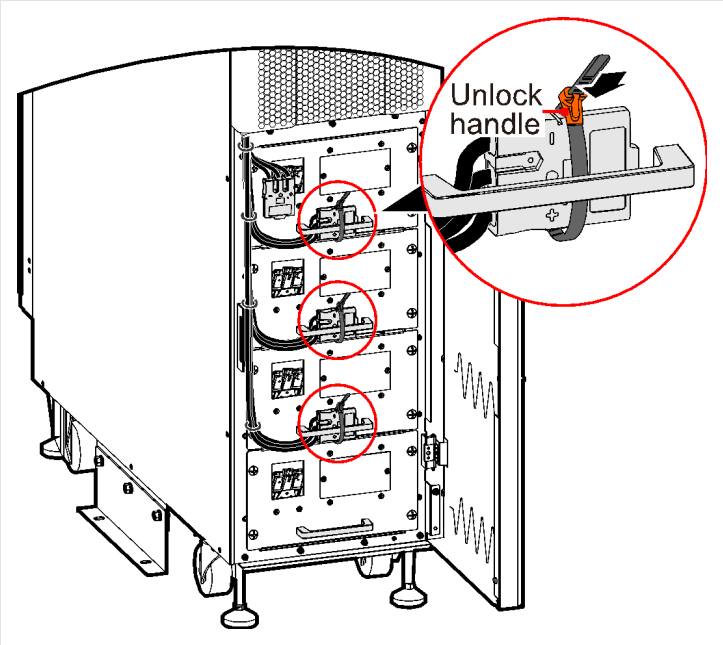

FIGURE 4-18 Transport cable ties on the module handles, and the release tab (detail)

4.8 Electrical connection

⚠ WARNING

- Before you connect, make sure the upstream utility and bypass breakers, the four UPS breakers and the external battery breaker are open (Figure 6-1, state A), and that the battery plug-ins are unplugged. Never connect live cables.
- Route the power cables where they cannot be stepped on or tripped over.
- Do not move the UPS after it has been wired.

4.8.1 Wiring a single UPS

1. Loosen the screw at the bottom of the wiring box and remove the bottom plate (Figure 4-19).
2. Drill the cable entry holes in the bottom plate: recommended positions in Figure 4-21, sizes in Table 4-7. You can drill them to suit the site.
3. Refit the bottom plate to the wiring box (Figure 4-20).
4. Remove the wiring cover: unscrew its bolts first, then slide the cover upward (Figure 4-22).
5. Connect the cables, the ground (PE) conductor first, to the terminals as marked on the terminal blocks (Figure 2-5, Figure 4-24, Figure 4-25) and in the order of Table 4-8.
6. Divide the cables into four bundles and tie them to the cable tie bar at the bottom of the cabinet (Figure 4-26).
7. Check that every cable is securely connected, then refit the wiring cover (Figure 4-27).
8. Plug in the battery plug-in of every installed module — one per module, two to four (Figure 4-28).
9. Turn the key counterclockwise to close the front door, and remove the key.

TABLE 4-7 Cable entry hole size

Model	Hole diameter
AUREON 10	1.09 in (27.8 mm)
AUREON 20	1.72 in (43.7 mm)
AUREON 30	1.97 in (50 mm)

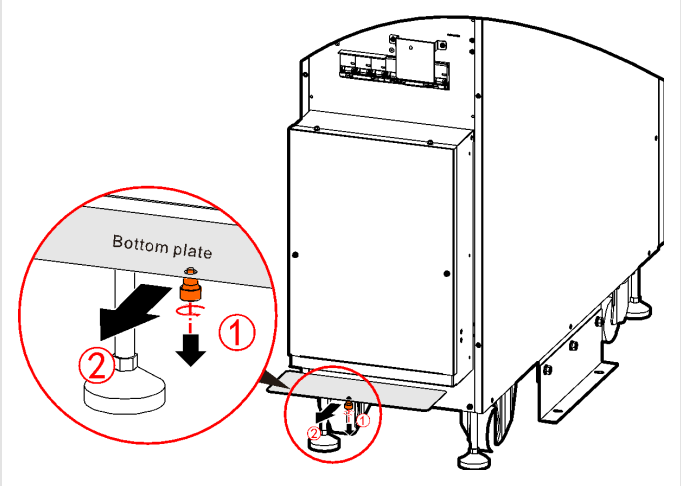

FIGURE 4-19 Step 1 — remove the bottom plate

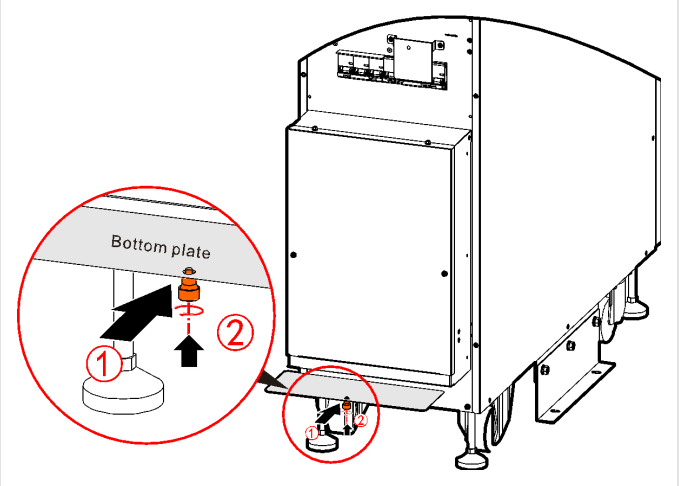

FIGURE 4-20 Step 3 — refit the bottom plate

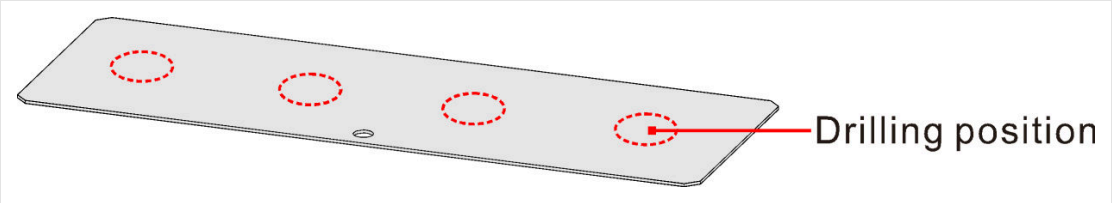

FIGURE 4-21 Step 2 — recommended drilling positions on the bottom plate

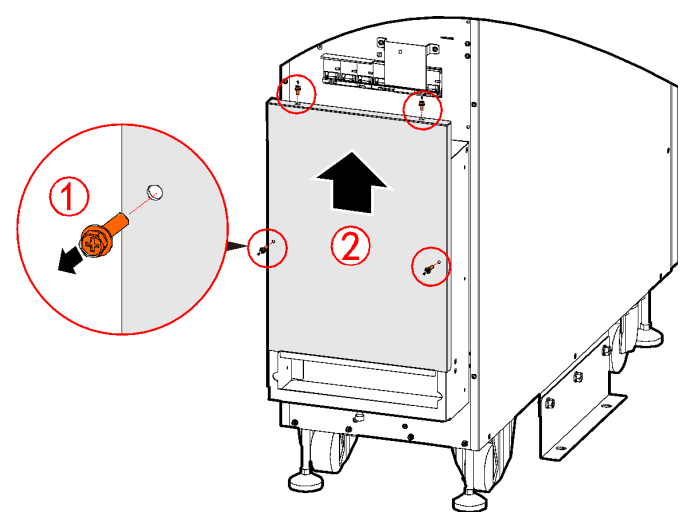

FIGURE 4-22 Step 4 — remove the wiring cover (unscrew, then slide up)

4.8.2 Terminal blocks and wire order

The terminal blocks are in the wiring box at the lower rear, behind the wiring cover (Figure 4-23): the AC terminal block, the PE bar below it and the EXTERNAL BATTERY terminal block (Figure 2-5). Table 4-9 gives the data for each terminal.

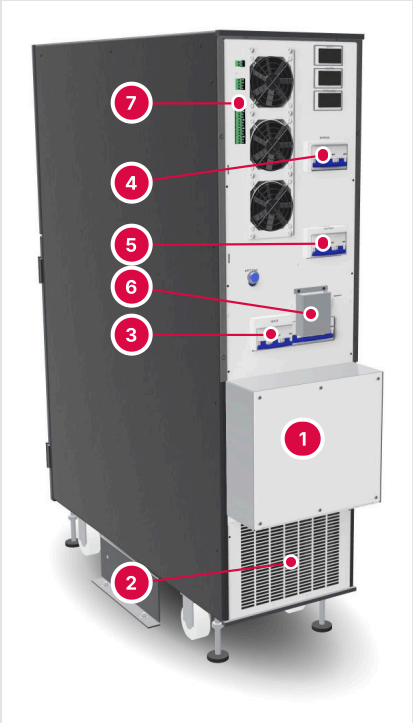

1	Wiring cover: the terminal blocks are behind it
2	Air outlet grille
3	INPUT breaker
4	BYPASS breaker
5	OUTPUT breaker
6	MAINTENANCE breaker cover
7	Communication ports and dry contacts

FIGURE 4-23 Rear of the UPS (30 kVA rear panel), wiring cover fitted — illustration from the AEC 3D model of the frame

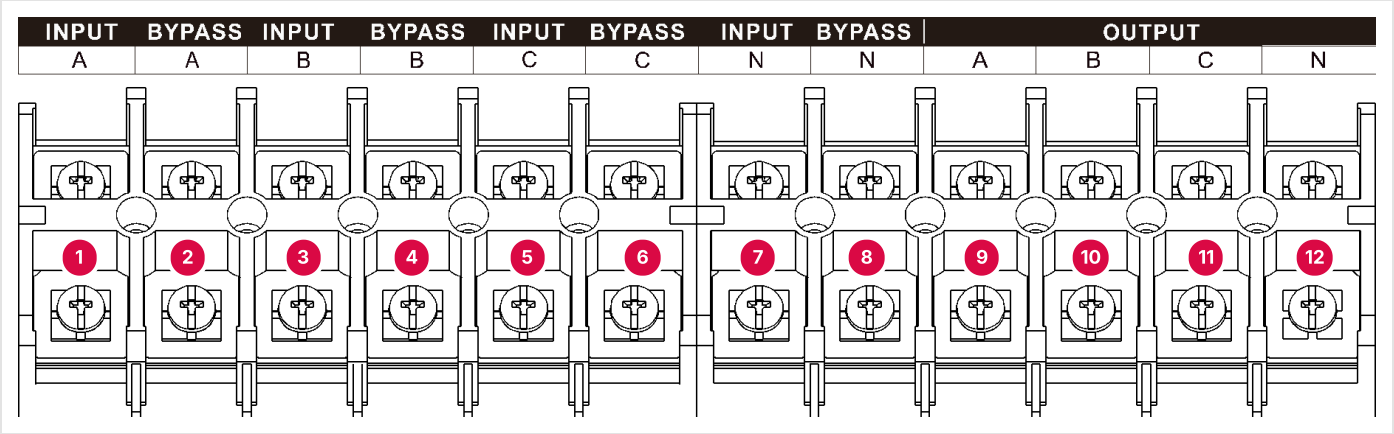

1. INPUT A — utility L1
2. BYPASS A — bypass L1
3. INPUT B — utility L2
4. BYPASS B — bypass L2
5. INPUT C — utility L3
6. BYPASS C — bypass L3
7. INPUT N — utility neutral
8. BYPASS N — bypass neutral
9. OUTPUT A — load L1
10. OUTPUT B — load L2
11. OUTPUT C — load L3
12. OUTPUT N — load neutral

FIGURE 4-24 AC terminal block, rear view, as marked on the block

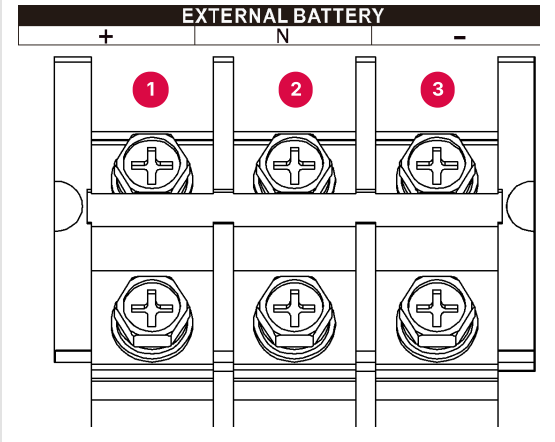

1. BATT. + — positive end of the string
2. BATT. N — center point of the string
3. BATT. – — negative end of the string

FIGURE 4-25 DC terminal block — EXTERNAL BATTERY

TABLE 4-8 Wire order

Terminal group	Order (left to right, rear view)	Notes
AC block	INPUT A · BYPASS A · INPUT B · BYPASS B · INPUT C · BYPASS C · INPUT N · BYPASS N · OUTPUT A · B · C · N	Input and bypass alternate, phase by phase. The phases are marked A, B, C (L1, L2, L3; also called U, V, W or R, S, T). Keep the same clockwise phase rotation on the input and the bypass.
PE bar	PE	Ground conductors of the input, bypass, output and battery cabinet. First on, last off.
DC block	BATT. + · BATT. N · BATT. –	External battery only. Check the polarity with a voltmeter before you connect.

⚠ CAUTION

- Do not touch the battery terminal block unless you are connecting an external battery.
- Wire the UPS exactly as marked on the terminal blocks and in Table 4-8 to avoid short circuits.
- Connect the ground cable first.

TABLE 4-9 Terminal data

Terminal	Bolt / stud	Torque	Wire, min. (AEC, AUREON 10 / 20 / 30)	Wire, max. (largest accepted / NEC size)	Ring terminal
AC block 1–12 — INPUT, BYPASS, OUTPUT A, B, C, N (Table 4-8)	Drawing M4 (Table C-1); the ...-6 ring terminals suggest larger studs — ask AEC	Not given ("the torque for the bolt size") — ask AEC	8 / 3 / 1 AWG	Largest: ask AEC · NEC 6 / 3 / 1 AWG (Table 4-3)	RNBS8-6 / RNBS22-6 / SG50-6 (Table 4-4)
PE bar	Drawing M6 (Table C-1)	ask AEC	8 / 3 / 1 AWG	Largest: ask AEC · NEC 250.122	RNBS8-6 / RNBS22-6 / SG50-6
DC block — BATT. +, N, –	Drawing M10 (Table C-1)	ask AEC	2 / 2 / 1/0 AWG	Largest: ask AEC · NEC 6 / 1 / 3/0 AWG	RNBS38-10 / RNBS38-10 / RNB60-10
Battery cabinet ground (battery PE)	Drawing M6 (Table C-1)	ask AEC	2 / 2 / 1/0 AWG	Largest: ask AEC	ask AEC

Use the larger of the AEC and NEC sizes (Table 4-3). The bolt sizes are those of the AEC wiring drawing; check the terminals on your unit, and ask AEC for the bolt size and torque, before you choose the ring terminals.

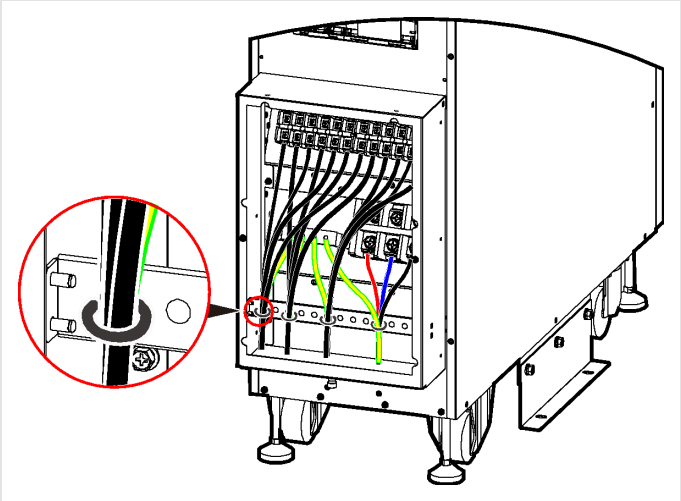

FIGURE 4-26 Step 6 — tie the cables in four bundles

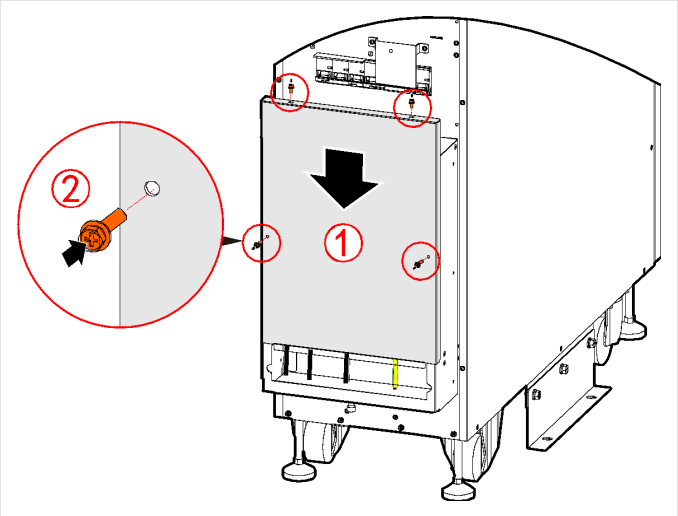

FIGURE 4-27 Step 7 — refit the wiring cover

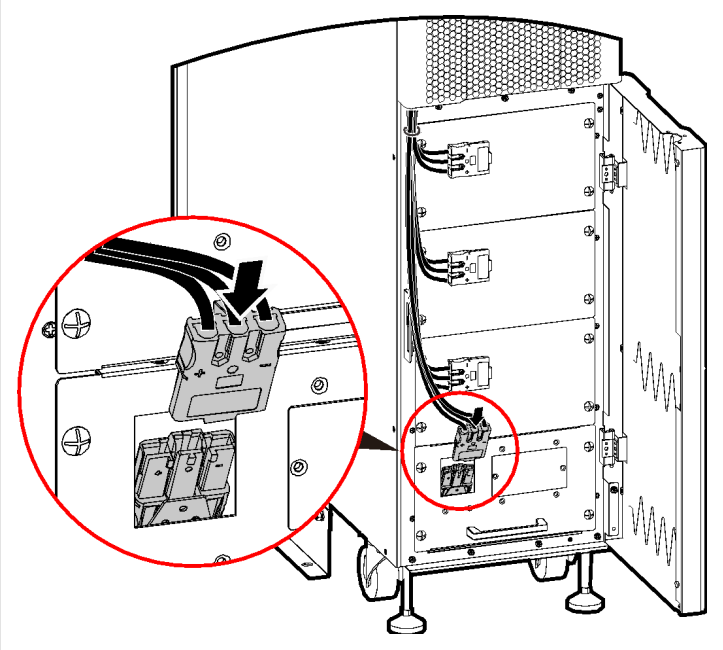

FIGURE 4-28 Step 8 — plug in the battery plug-in of each module (detail)

i NOTE

- Remove the plastic protective cover of the DC terminal block before you wire an external battery, and refit it afterwards. Fix the external battery cables vertically; the terminals of adjacent poles must not touch.
- Plug in the battery plug-ins only after all battery modules are installed. To remove a battery module, unplug its plug-in first.

⚠ *CAUTION*

While you operate the maintenance-bypass breaker, do not press the door switch behind its cover (Figure 4-29). The switch tells the UPS that the cover is off.

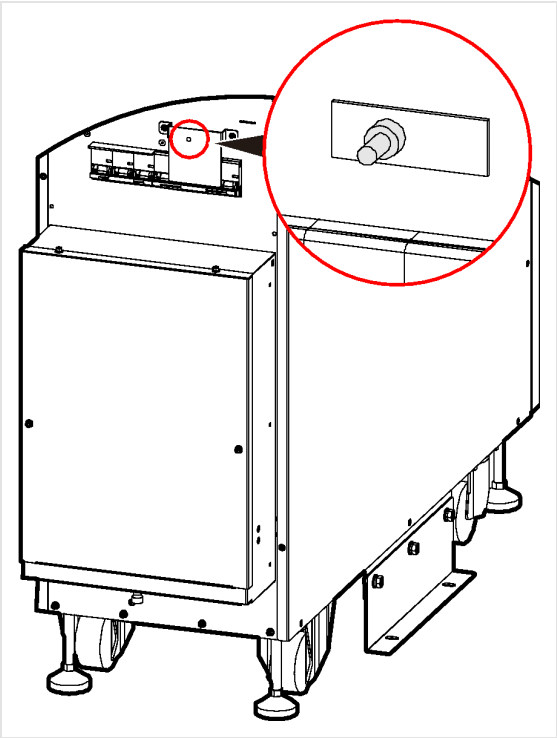

FIGURE 4-29 Door switch of the maintenance bypass, behind the breaker cover (detail)

4.8.3 Connecting an external battery

- With internal batteries, an external battery cabinet can be added to extend the runtime.
- Without internal batteries, an external battery must be connected.

The battery input takes a split battery string, positive and negative halves with a center point: 8 to 10 blocks of 12 V on the positive side and the same number on the negative side (10 + 10 by default, set as 60 cells on the display, Table 5-4). Figure 4-30 shows a battery cabinet with 20 blocks and one 3-pole DC breaker; the external cables are BATT. +, BATT. N and BATT. –.

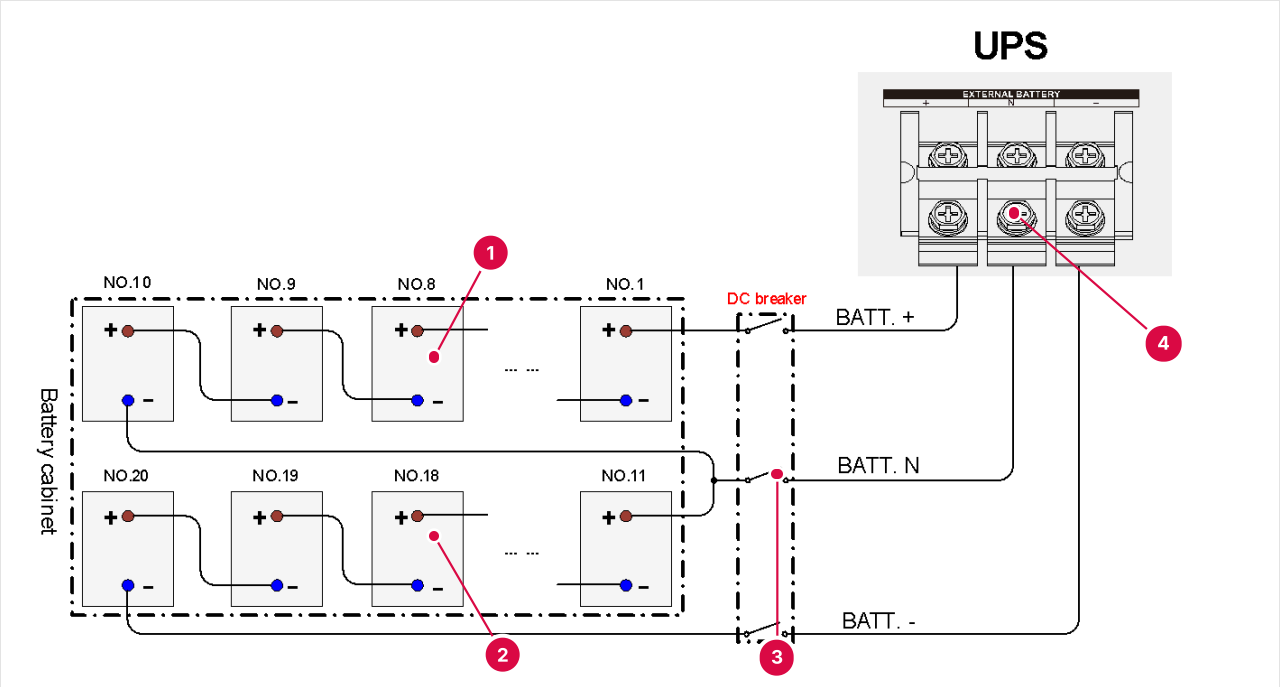

1. Blocks No. 1 to No. 10: positive half
2. Blocks No. 11 to No. 20: negative half
3. 3-pole DC breaker in the battery cabinet
4. UPS DC terminal block, + N – (Figure 4-25)

FIGURE 4-30 External battery wiring — 20 blocks, 3-pole DC breaker

1. Check that the DC breaker of the battery cabinet is open and the battery plug-ins of the internal modules are unplugged.
2. Connect the cabinet ground to the PE bar of the UPS.
3. Remove the plastic cover of the DC terminal block. Connect BATT. +, BATT. N and BATT. – from the cabinet breaker to the + N – terminals (Figure 4-25). Check the polarity with a voltmeter.
4. Refit the plastic cover. Leave the cabinet breaker open until start-up (Section 6.3).
5. Set the battery capacity and the battery quantity on the touchscreen to match the installed battery (Section 5.5.2).

⚠ WARNING

Use the same type and number of blocks in every string, internal and external. Check the polarity of every connection before you close the DC breaker: reversed polarity can damage the battery and the UPS.

4.8.4 Wiring a parallel system

Up to four UPS of the same rating can run in parallel, for redundancy or capacity.

1. Install each UPS and its batteries as described in Section 4.6 and Section 4.7.
2. Install the parallel kit in the PARALLEL port of every UPS (see the kit's installation guide).
3. Connect the input, bypass, output and battery cables of the parallel system as shown in Figure 4-31.
4. Connect the parallel ports of the UPS units with the parallel cables in a ring (Figure 4-32, Figure 4-33).
5. Set every UPS to the same parallel mode, with a different Parallel UPS ID (Section 5.5.7).

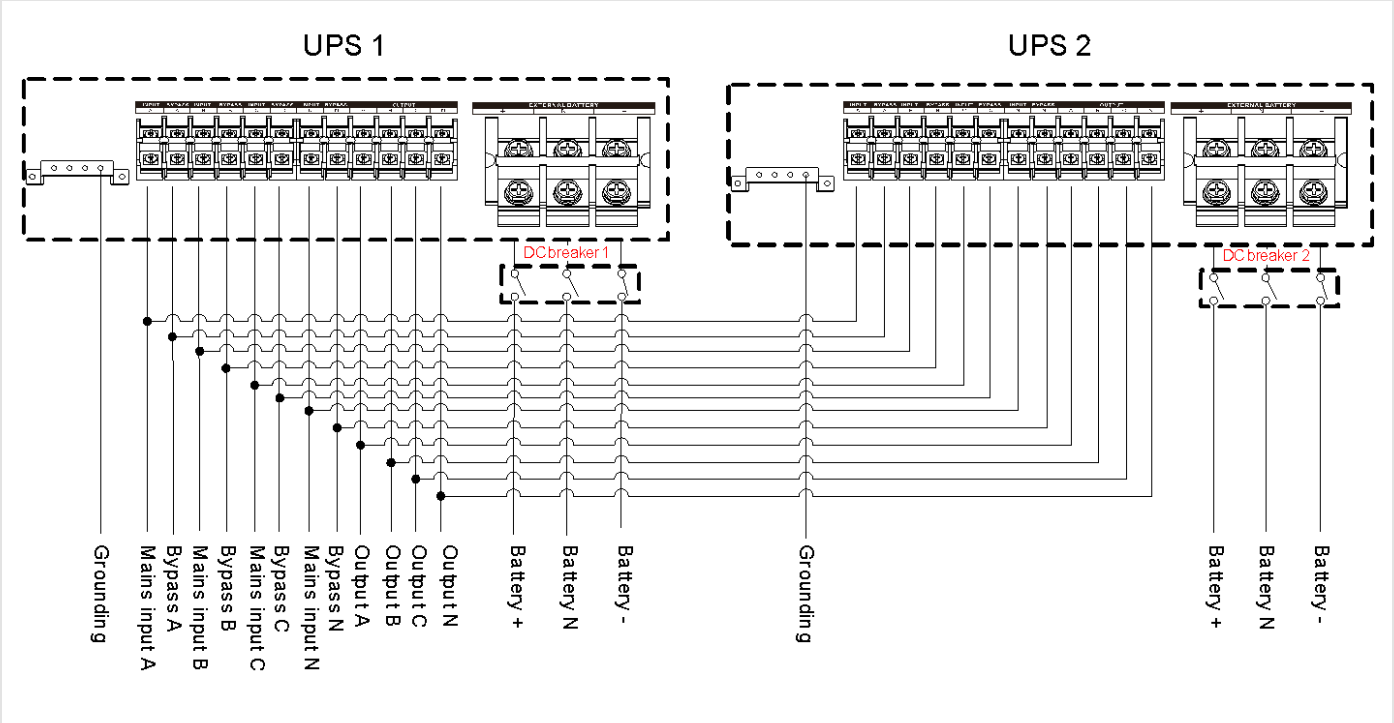

FIGURE 4-31 Parallel system power wiring (two UPS shown)

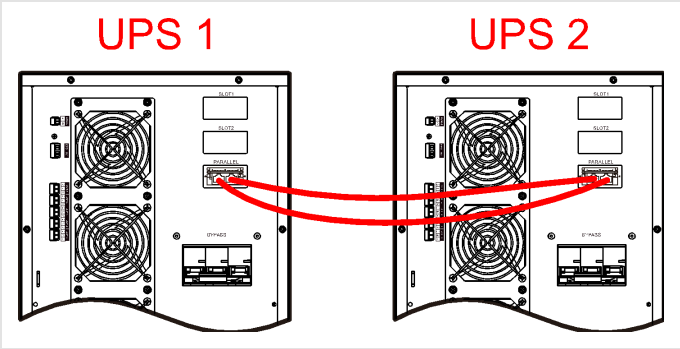

FIGURE 4-32 Parallel cables, two UPS

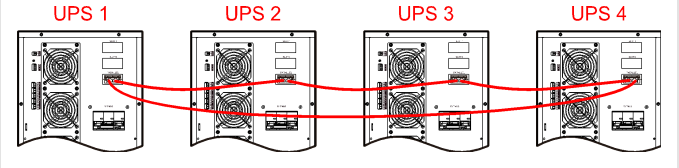

FIGURE 4-33 Parallel cables, four UPS

Each UPS has two identical RJ45 parallel ports. They back each other up for reliability; the UPS alarms if one of them is not connected.

⚠ WARNING

- Make sure the parallel kit of every UPS is installed correctly.
- The wiring and phase sequence of every UPS must be exactly the same, so that the bypass supplies of the system are in phase. Keep the input and output cables of all UPS of the same length and size.
- UPS units in parallel can share battery strings, but every UPS must have the same number of batteries.

CHAPTER 5

05 Touchscreen operation

The 4.3-inch color touchscreen shows the input, output, load and battery data, the UPS status and alarms, the history record and every setting.

i NOTE The values in the screen pictures of this chapter are examples (some were taken at 50 Hz). The touchscreen shows phase (line-to-neutral) voltages, 120 V in the US; the rating plate gives the line-to-line voltage, 208 V. The screen calls the utility input **Mains**.

⚠ CAUTION

The touchscreen gives access to the operating parameters of the UPS. Only designated, qualified personnel may change settings. If the meaning of a parameter is not clear, consult this manual or AEC; do not change parameters without authorization.

5.1 Menu structure

TABLE 5-1 Menu structure of the touchscreen

Main menu	Page	What it shows or sets
Main page	Bypass information	Voltage, current, frequency
	Mains information	Voltage, current, frequency of the utility input
	Battery information	Voltage, charge and discharge current, remaining capacity, remaining time, battery status
	Output information	Voltage, current, active and apparent power, load, power factor, frequency
Login	—	User or administrator login (Section 5.3)
Information management	Run info.	Utility, bypass, battery, output, rectifier and inverter status, mode, temperatures
	History record	Fault and alarm records
	User log	Operation records
	Device info.	Product name, model, serial number, software and hardware versions
Settings management	Sys. manage	Output set, Bypass set, ECO set
	Batt. manage	Battery set, Charge set
	Battery test	Test type, test result
	Dry contact	Input and output dry contact functions
	Comm. set	Modbus station number and baud rate of the RS-485 port
	HMI set	Date, time, language, backlight, brightness
	Password set	Login passwords

Main menu	Page	What it shows or sets
	Device config.	Mode set, Other set
	Dedust set	Fan dust-cleaning cycle
	Reco. manage	Export and clear records
Current faults	—	Active alarms and faults (Section 5.6)
Buzzer	—	Silence or re-enable the buzzer (Section 5.7)
UPS on/off	—	Turn the UPS on or off (Section 5.8)

5.2 Main page

After power-up the touchscreen initializes and then shows the main monitoring page: the power path (topology) of the UPS, with the icons of the menu on the left.

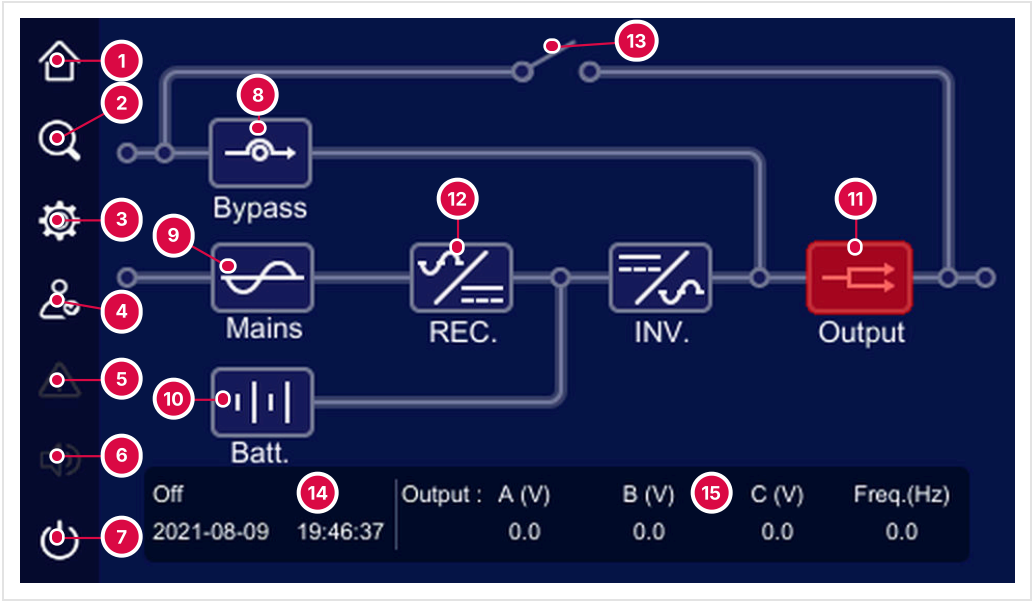

1. Home: back to the main page from any page
2. Information management (Section 5.4)
3. Settings management (Section 5.5), after login
4. Login (Section 5.3)
5. Current faults: lights when a fault is active (Section 5.6)
6. Buzzer on/off (Section 5.7)
7. UPS on/off (Section 5.8)
8. Bypass: touch for bypass information; red when abnormal
9. Mains (utility input): touch for information; red when abnormal
10. Batt.: touch for battery information; red when abnormal
11. Output: touch for output information; red when abnormal
12. REC. (rectifier) and INV. (inverter)
13. Maintenance bypass path
14. Operating status, date and time
15. Output voltage per phase and frequency

FIGURE 5-1 Main page (UPS off)

5.2.1 Operating status

The animated power path (yellow "water lights") shows the six main states. Other states have their own indications.

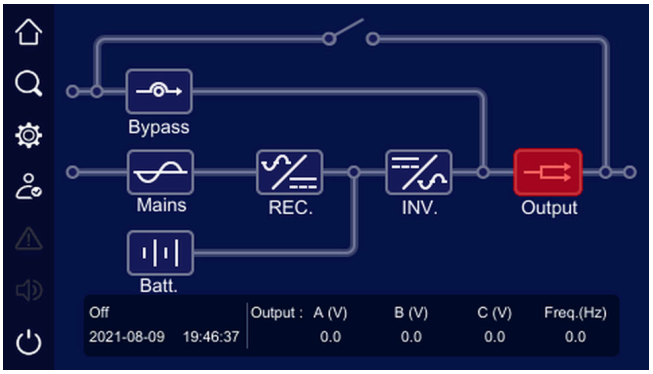

FIGURE 5-2 No power transfer (UPS off)

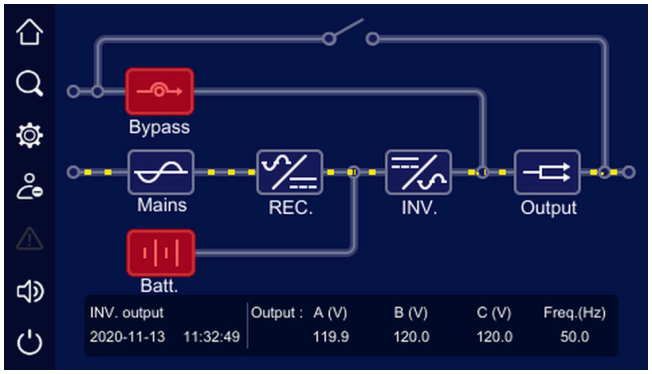

FIGURE 5-3 Utility normal, inverter mode (INV. output)

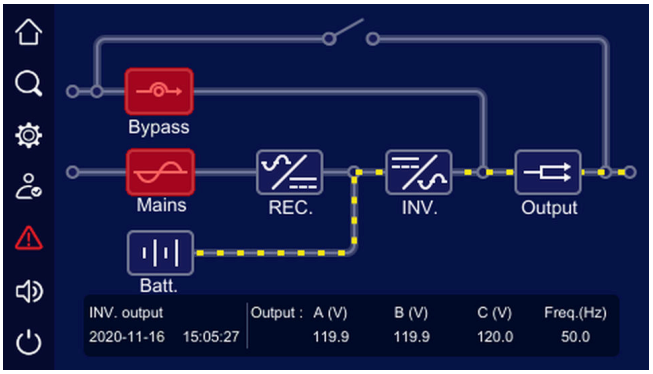

FIGURE 5-4 Utility abnormal, battery mode

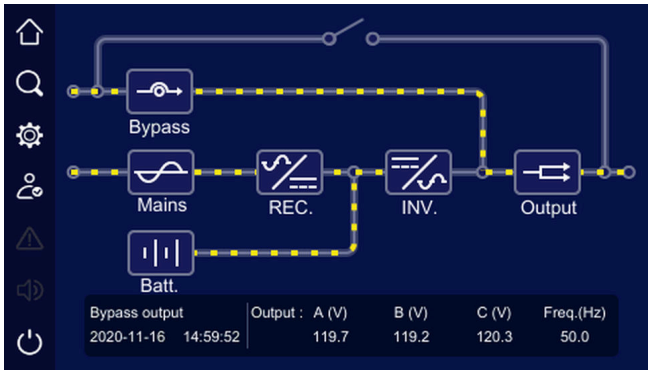

FIGURE 5-5 Bypass output

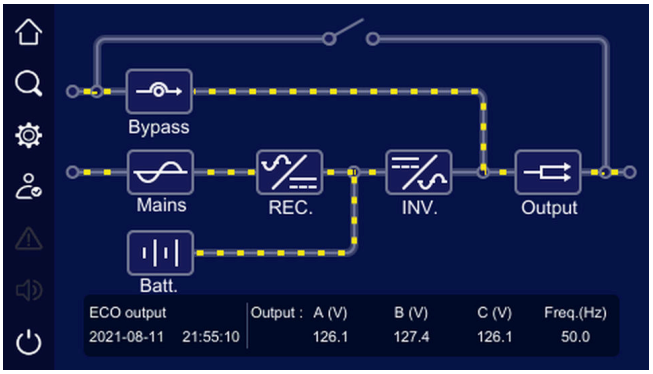

FIGURE 5-6 ECO output

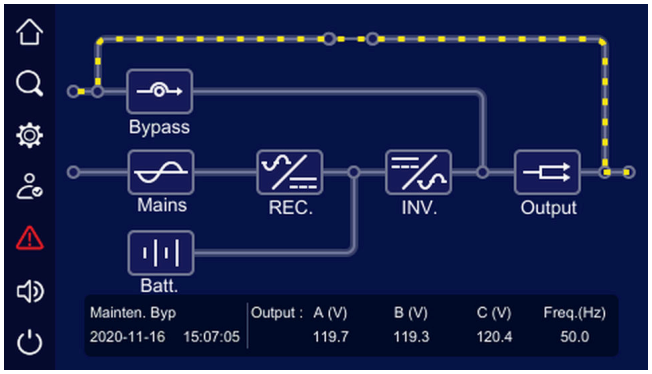

FIGURE 5-7 Maintenance-bypass output (Mainten. Byp)

A red icon marks an abnormal input. In the inverter-mode example the bypass and battery icons are red because those inputs were not connected when the picture was taken.

5.2.2 Bypass, utility and output information

On the main page touch the **Bypass** icon for the bypass information, the **Mains** icon for the utility input and the **Output** icon for the output: voltage, current, load, active and apparent power, power factor and frequency.

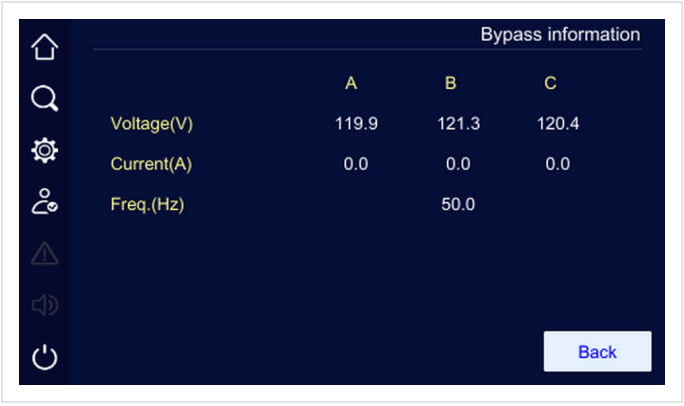

FIGURE 5-8 Bypass information

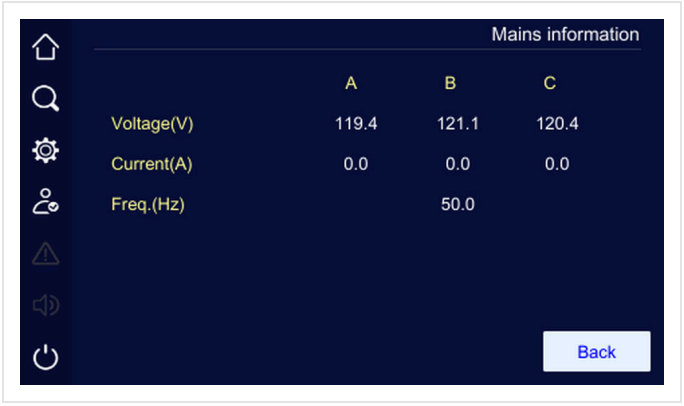

FIGURE 5-9 Mains information (utility input)

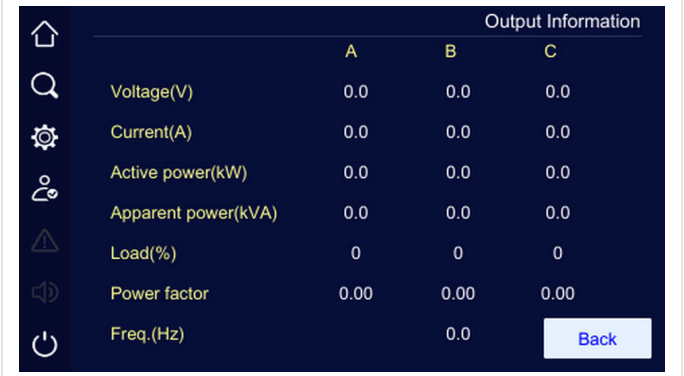

FIGURE 5-10 Output information

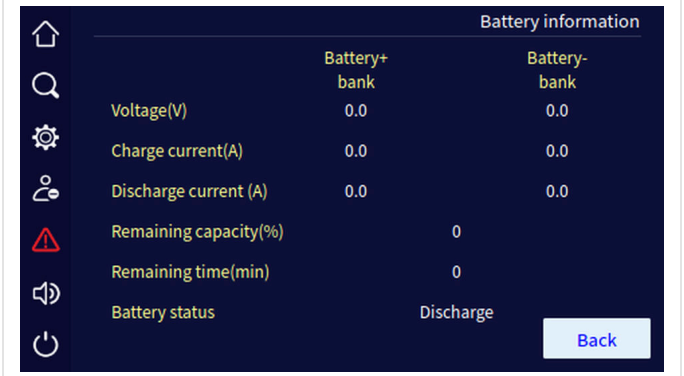

FIGURE 5-11 Battery information

5.2.3 Battery information

On the main page touch the **Batt.** icon (Figure 5-11). The page shows the voltage of the positive and the negative half of the battery (Battery+ bank, Battery– bank). While the battery discharges, the page shows the discharge current; while it is on equalizing or float charge, the charge current. The battery status reads discharge, equalizing charge or float charge. The page also shows the remaining capacity and the remaining runtime.

5.3 Login

On the main page touch the login icon (Figure 5-1, item 4) to open the login page. Enter the password on the keypad and touch ENTER. Settings can be changed only after login.

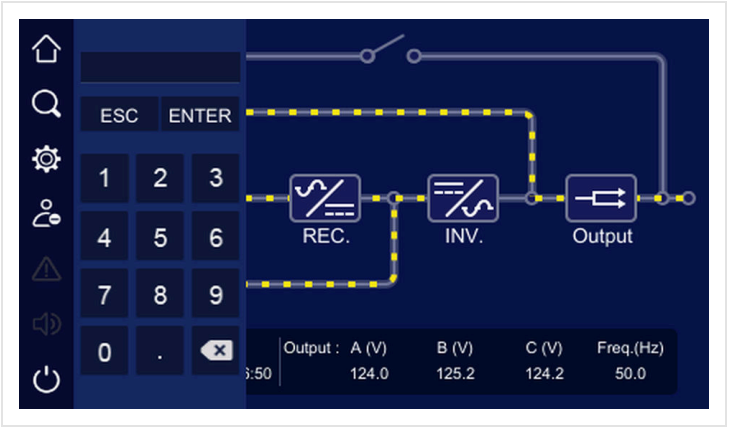

FIGURE 5-12 Login page with the keypad

TABLE 5-2 Login levels

Level	Default password	Access
User	111	View the parameters only
Administrator	Given by AEC technical service	View and change the settings

> **WARNING**
>
> Change both default passwords at the first login, on the password page (Section 5.5.6), and keep them in a safe place. Anyone with the administrator password can change the output and battery settings.

5.4 Information management

On the main page touch the information icon (Figure 5-1, item 2) to open the information management page: run information, history record, user log and device information.

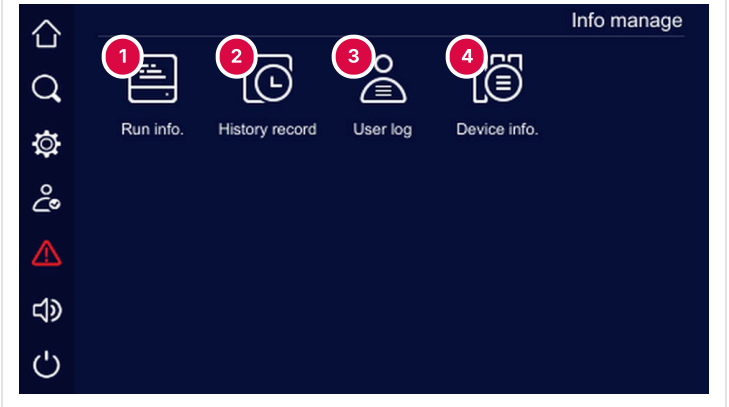

1. Run info.
2. History record
3. User log
4. Device info.

FIGURE 5-13 Information management page

5.4.1 Run information

Touch **Run info.** to see the present UPS status: utility, bypass, battery, output and load status, rectifier and inverter status, operating mode, input, bypass and battery circuits, fan status and internal temperature. Touch **Next** and **Previous** to change page.

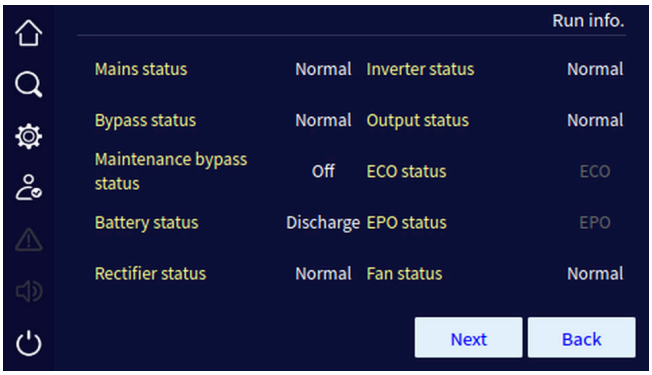

FIGURE 5-14 Run information, page 1

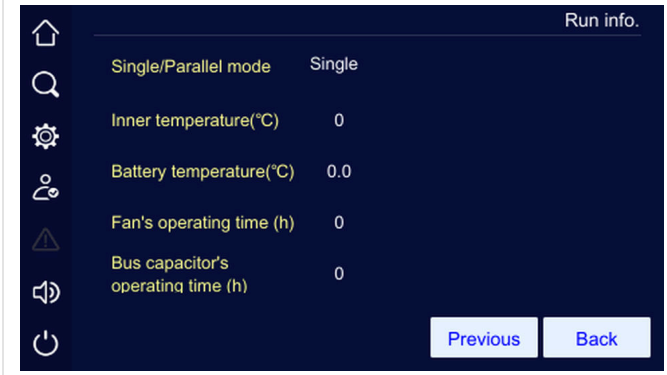

FIGURE 5-15 Run information, page 2

5.4.2 History record and user log

Touch **History record** to see the fault and alarm events, newest first. Touch **User log** to see the operations performed — on/off commands, changes of the voltage settings, etc. — newest first. Use the arrows to scroll.

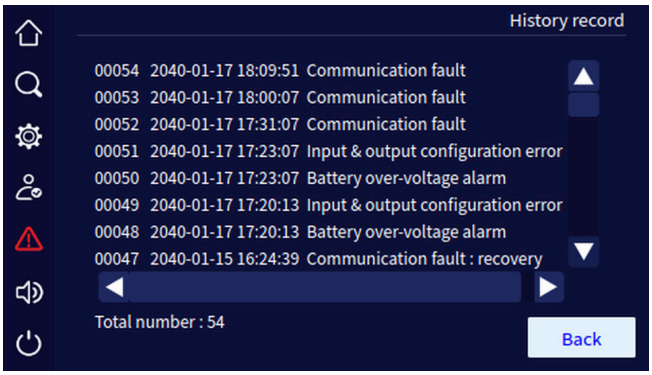

FIGURE 5-16 History record

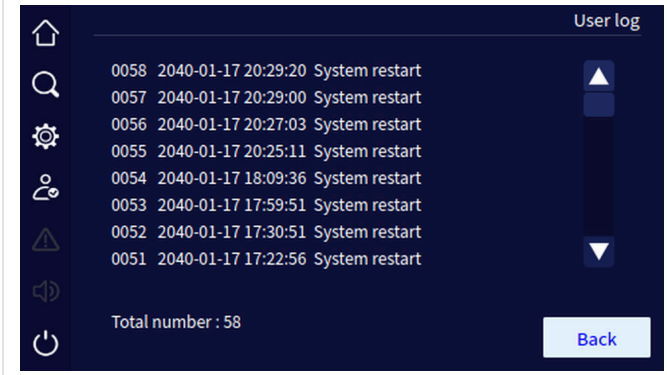

FIGURE 5-17 User log

5.4.3 Device information

Touch **Device info.** to see the product name and model, the serial number and the versions of the rectifier, inverter, system, protocol and HMI software. Have them ready when you call AEC support.

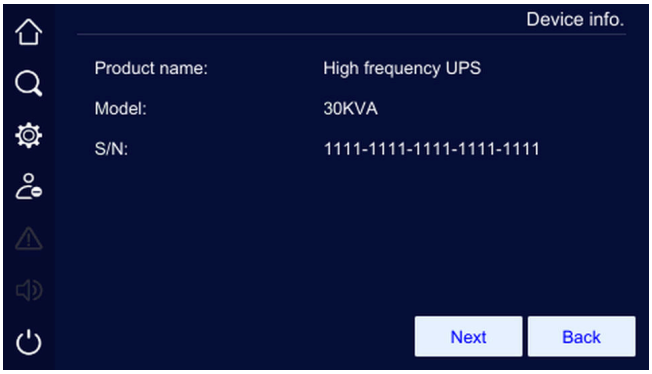

FIGURE 5-18 Device information, page 1

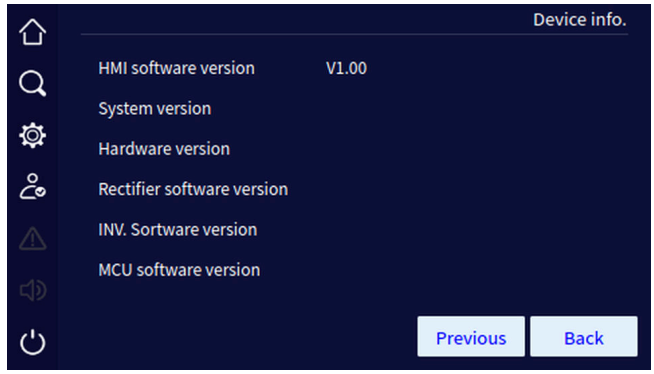

FIGURE 5-19 Device information, page 2

5.5 Settings

After login, touch the settings icon (Figure 5-1, item 3) to open the settings page.

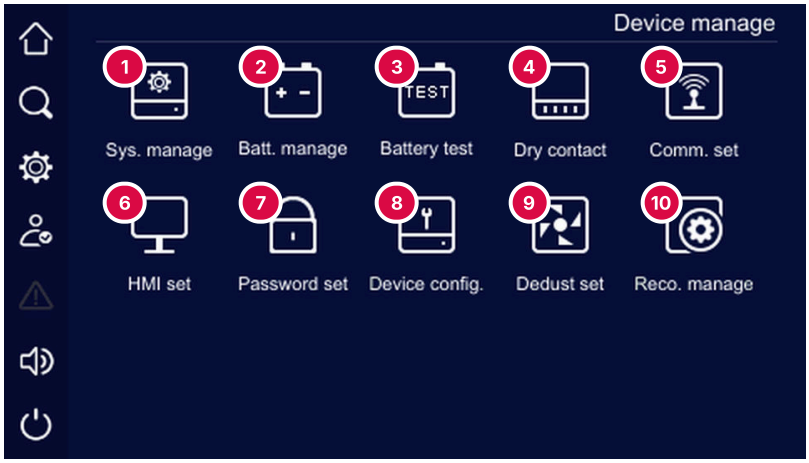

1. Sys. manage — output, bypass, ECO (Section 5.5.1)
2. Batt. manage (Section 5.5.2)
3. Battery test (Section 5.5.3)
4. Dry contact (Section 5.5.4)
5. Comm. set — Modbus station number and baud rate of the RS-485 port
6. HMI set (Section 5.5.5)
7. Password set (Section 5.5.6)
8. Device config. (Section 5.5.7)
9. Dedust set (Section 5.5.8)
10. Reco. manage (Section 5.5.9)

FIGURE 5-20 Settings page

Saving a setting. Touch a value and choose it, or touch a number field: its allowed range shows above the keypad, and a value out of range is not accepted. Then touch **Save**. A green check next to the parameter confirms the change (Figure 5-21); a red cross means it was not accepted (Figure 5-22). The same marks apply on every settings page.



FIGURE 5-21 Setting accepted (green check)



FIGURE 5-22 Setting not accepted (red cross)

5.5.1 System settings

Sys. manage has three tabs: **Output set**, **Bypass set** and **ECO set** (Table 5-3).



FIGURE 5-23 Output set

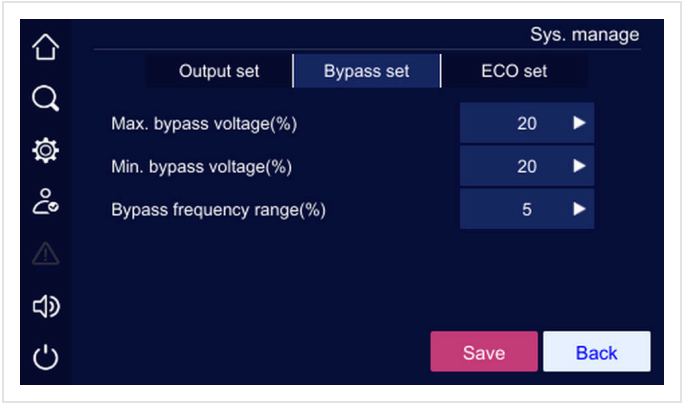

FIGURE 5-24 Bypass set

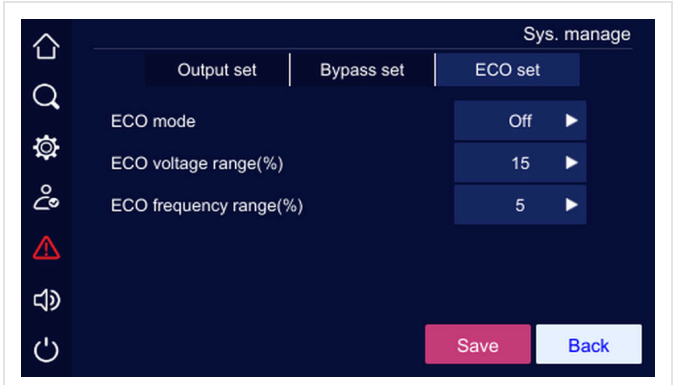

FIGURE 5-25 ECO set

TABLE 5-3 System settings

Setting	Values
Output voltage	190, 200, 208, 220 V line-to-line (US: 208 V; the screen may show the phase value, 120 V)
Output frequency	50, 60 Hz (US: 60 Hz)
Output voltage adjustment	−5 to +5 V
Max. bypass voltage (upper limit)	+10, +15, +20 %
Min. bypass voltage (lower limit)	−10, −15, −20 %
Bypass frequency range	±5, ±10 %
ECO mode	On, Off
ECO voltage range	±10, ±15 %
ECO frequency range	±5, ±10 %

5.5.2 Battery settings

Batt. manage has two tabs. **Battery set** sets the battery: capacity, number of cells, rest function, backup function, low-voltage protection and test end voltage. **Charge set** sets the charging: equalizing and float voltage, temperature compensation, charge current and forced equalizing charge (Table 5-4).



FIGURE 5-26 Battery set, page 1

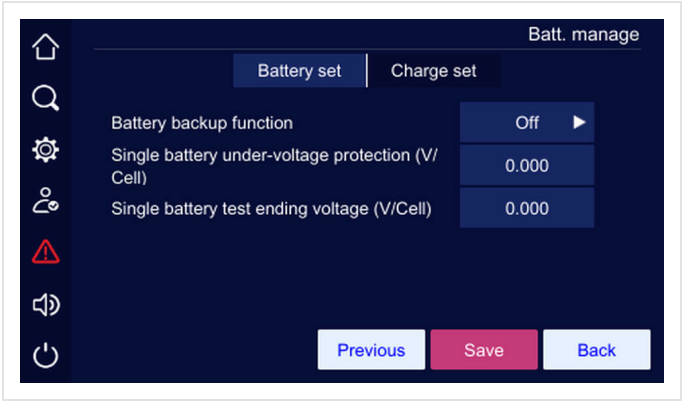

FIGURE 5-27 Battery set, page 2

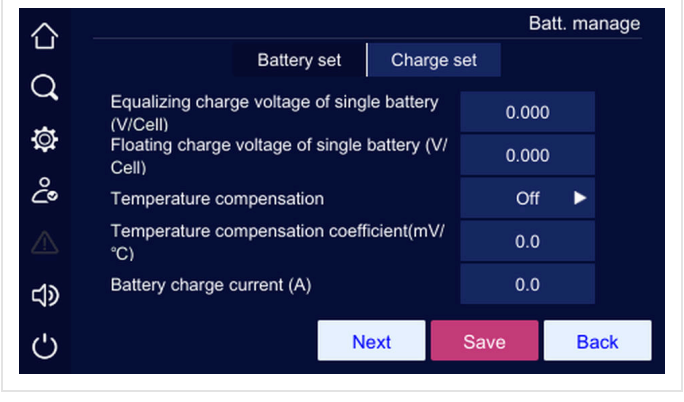

FIGURE 5-28 Charge set, page 1

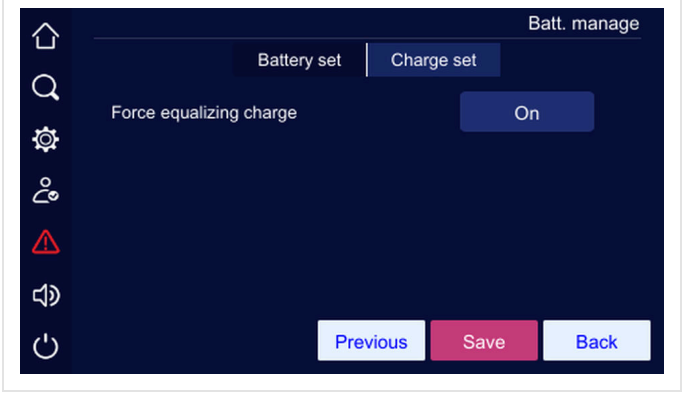

FIGURE 5-29 Charge set, page 2

TABLE 5-4 Battery settings

Setting	Values
Battery capacity	1 to 2,000 Ah
Battery amount (battery quantity)	48 to 60 cells of 2 V per half string (8 to 10 blocks of 12 V); 60 for the internal modules
Battery static (rest) function	On, Off
Battery static (rest) time	1 to 30 days
Battery static (rest) delay time	1 to 48 h
Battery backup function	On, Off
Low-voltage protection, per cell	1.667 to 1.867 V
Battery test end voltage, per cell	1.667 to 1.867 V
Equalizing charge voltage, per cell	2.083 to 2.417 V
Float charge voltage, per cell	2.083 to 2.333 V
Temperature compensation	On, Off
Temperature compensation coefficient	0 to 2.8 mV/°F (0 to 5.0 mV/°C)
Battery charge current	AUREON 10: 1.0–10.0 A (default 1 A) · AUREON 20: 1.0–20.0 A (default 2 A) · AUREON 30: 1.0–20.0 A (default 4 A)
Force equalizing charge	On

NOTICE

The battery quantity set here must match the installed battery: every internal module and every external string must have the same number of blocks. A wrong setting overcharges or undercharges the battery.

5.5.3 Battery test

The **Battery test** page runs a standard or a deep battery test, a timed test, or cancels a test in progress. It shows the test status, the battery current, the consumed capacity and the test time.

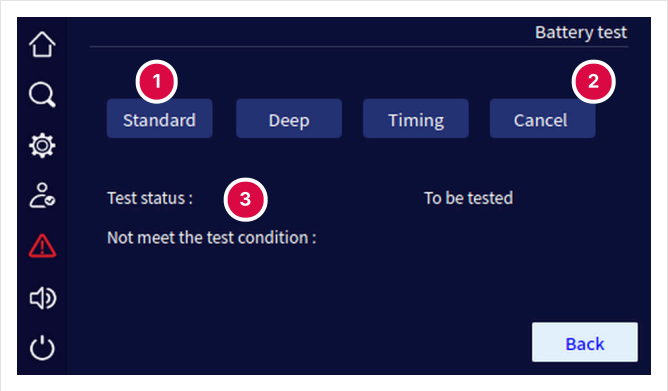

1. Standard, Deep, Timing: start a test
2. Cancel: stop the test
3. Test status and the reason if the test cannot start

FIGURE 5-30 Battery test page

Run the test with the UPS in normal mode and the battery fully charged. If the test conditions are not met, the page says why ("Not meet the test condition").

5.5.4 Dry contact settings

Touch **Dry contact** to set the function of each contact (Table 2-7, Table 2-8). All contacts are set the same way; dry contact 1 is shown.

1. Touch the **Input** or **Output** tab.
2. Touch the button of the contact (Figure 5-31, Figure 5-33).
3. Choose the signal; for an input, also choose the trigger level (**NO** or **NC**) (Figure 5-32, Figure 5-34).
4. Touch **OK** to return, then **Save**.

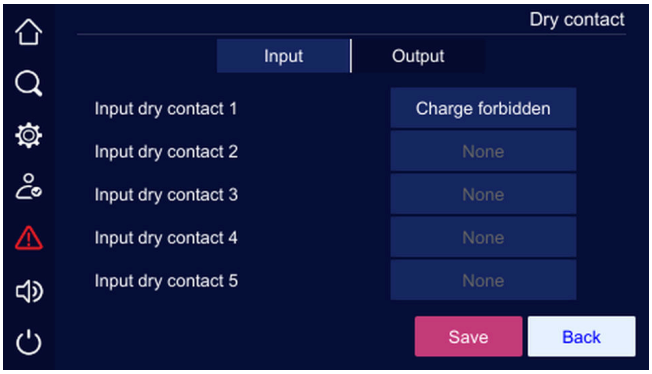

FIGURE 5-31 Input dry contacts

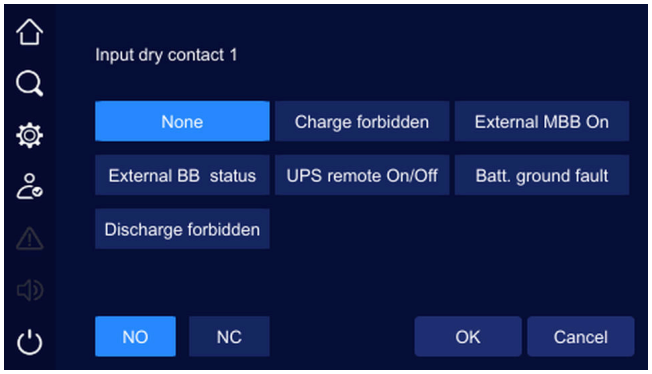

FIGURE 5-32 Input dry contact options and trigger level



FIGURE 5-33 Output dry contacts

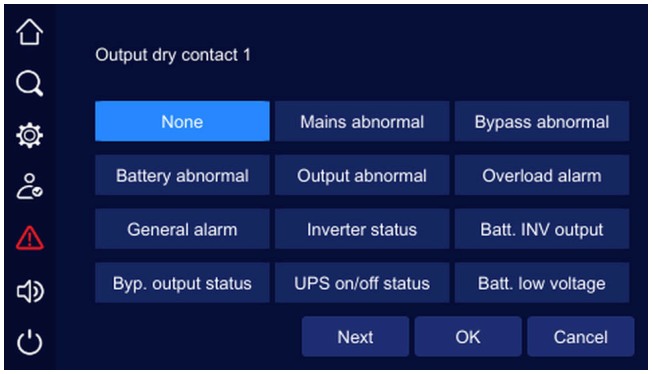

FIGURE 5-34 Output dry contact options

5.5.5 HMI settings

HMI set sets the date, the time, the backlight time, the language, the brightness and the atmosphere light.

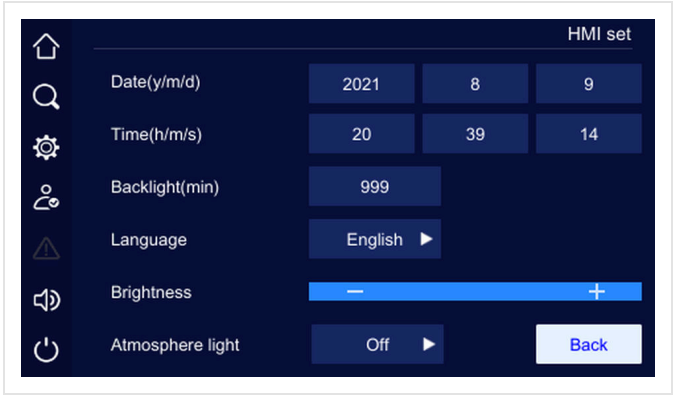

FIGURE 5-35 HMI set

5.5.6 Password

Touch **Password set** to change the login password: enter the old password, the new password twice, and touch **Save**.

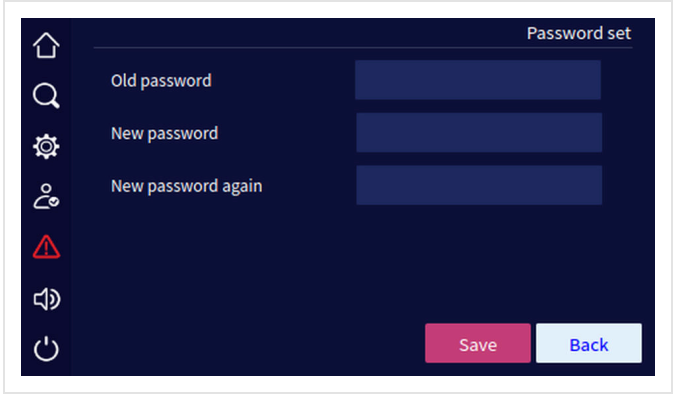

FIGURE 5-36 Password set

5.5.7 Device configuration

Touch **Device config.** to open the device configuration: **Mode set** (three pages) and **Other set** (Table 5-5).

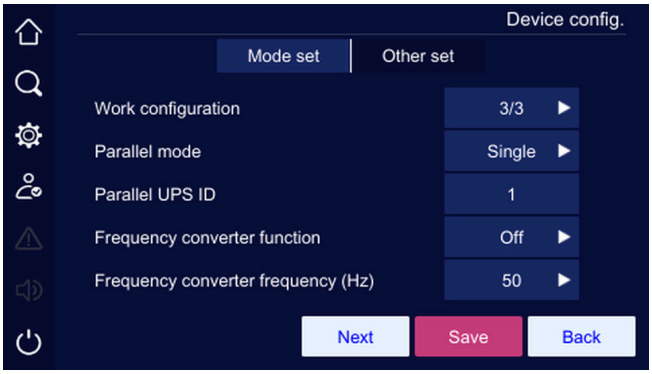

FIGURE 5-37 Mode set, page 1



FIGURE 5-38 Mode set, page 2

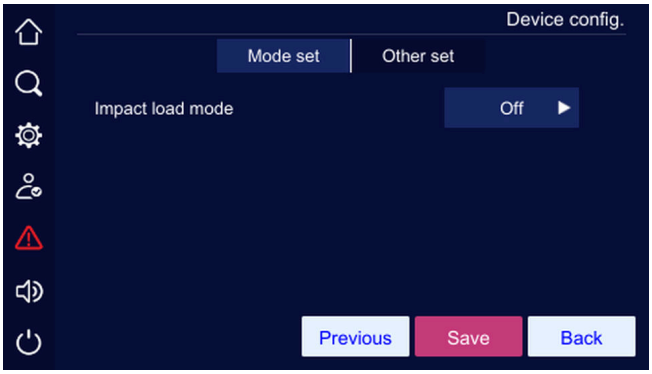

FIGURE 5-39 Mode set, page 3

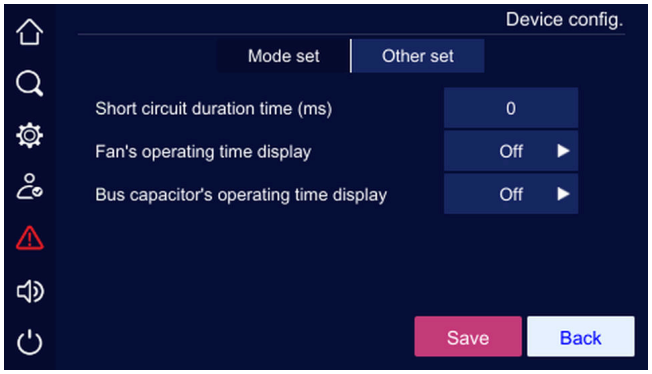

FIGURE 5-40 Other set

TABLE 5-5 Device configuration

Setting	Values
Work configuration	3/3 (three-phase in, three-phase out)
Parallel mode	Single, Redundant, Expand, BSC — factory setting Single
Parallel UPS ID	1 to 4, a different ID on each UPS of a parallel system
Frequency converter function	On, Off
Frequency converter frequency	50, 60 Hz
Self-start when power on	UPS will not turn off, On, Off
Bypass disable	On, Off
Bypass disable when short circuit	On, Off
Test load function	On, Off
Test load rate	10 to 100 %
Impact load mode	On, Off
Short circuit duration time	10 to 200 ms
Fan's operating time display	On, Off
Bus capacitor's operating time display	On, Off

Touch a number field to see its allowed range; touch **Save** to save.

5.5.8 Dedust

Touch **Dedust set** to start a standard or timed fan dust-cleaning cycle, or to cancel it.

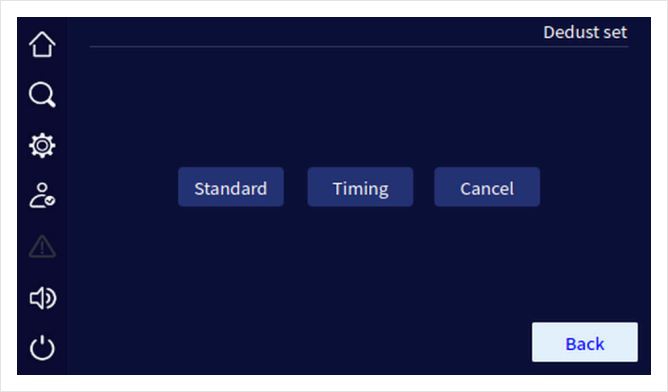

FIGURE 5-41 Dedust set

5.5.9 Record management

Reco. manage exports or clears the history record, the user log and the fan and bus-capacitor operating times. Insert a USB flash drive in the USB port of the touchscreen, then touch the export icon next to a record to save it on the drive, or the clear icon to clear it. A confirmation window appears before clearing.

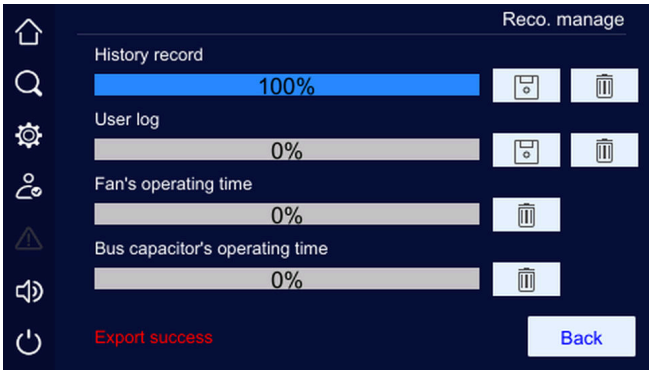

FIGURE 5-42 Records exported ("Export success")

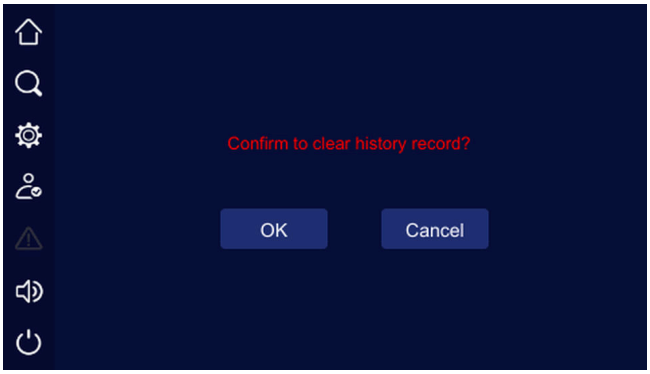

FIGURE 5-43 Confirm clearing the record

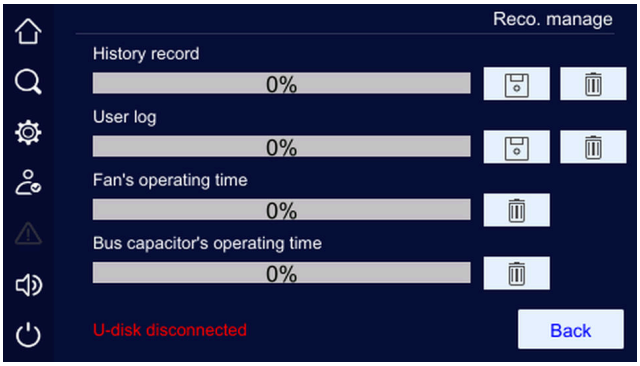

FIGURE 5-44 USB drive not inserted (U-disk disconnected)

5.6 Current faults

When the UPS has a fault, the fault icon lights red (Figure 5-45). Touch it to see the active faults (Figure 5-46). Look each fault up in Table 7-2.

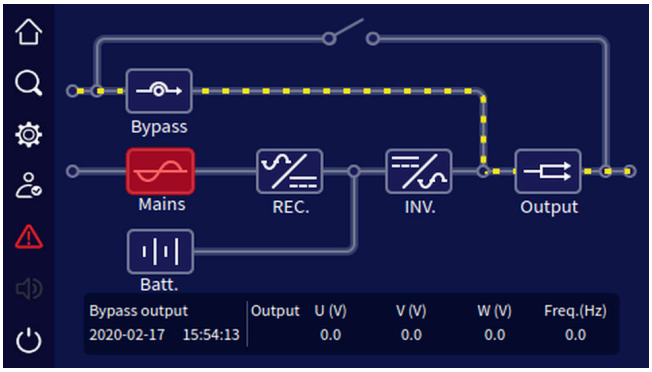

FIGURE 5-45 Fault alarm — fault icon lit

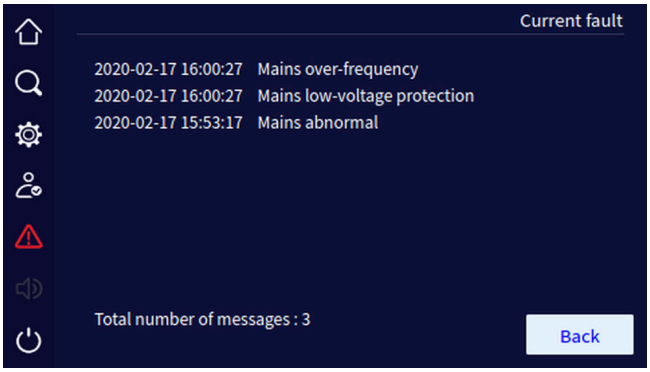

FIGURE 5-46 Current fault list

5.7 Buzzer

When the UPS has a fault, the buzzer icon lights. Touch it to silence or re-enable the buzzer; Figure 5-47 shows the buzzer silenced (crossed speaker).

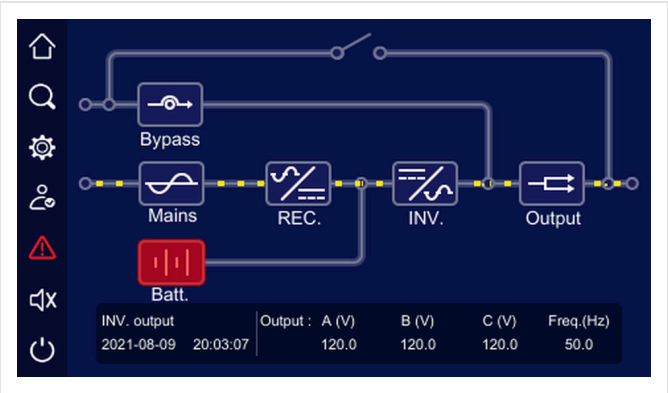

FIGURE 5-47 Buzzer silenced

i NOTE A continuous (long) beep cannot be silenced.

5.8 Turning on and off from the touchscreen

On the main page touch the on/off icon (Figure 5-1, item 7). With the UPS off, the screen asks "Confirm to power on?"; with the UPS on, "Confirm to power off?". Touch **OK** to confirm or **Cancel**.

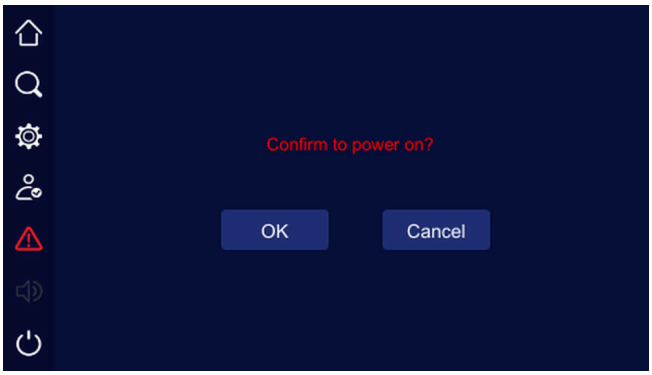

FIGURE 5-48 Confirm power on

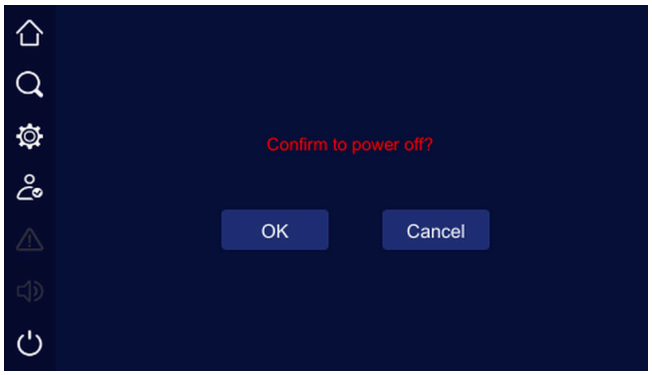

FIGURE 5-49 Confirm power off

06

CHAPTER 6

Operation

The breaker states, the checks before the first start, starting and stopping a single UPS, cold start, the maintenance bypass, EPO and the parallel system.

6.1 Breaker states

The four breakers are on the rear panel (Figure 2-4): **INPUT**, **BYPASS**, **OUTPUT** and **MAINTENANCE** (under its cover). The procedures of this chapter refer to the states of Figure 6-1. The external battery cabinet has its own DC breaker; the internal battery modules connect through their plug-ins.

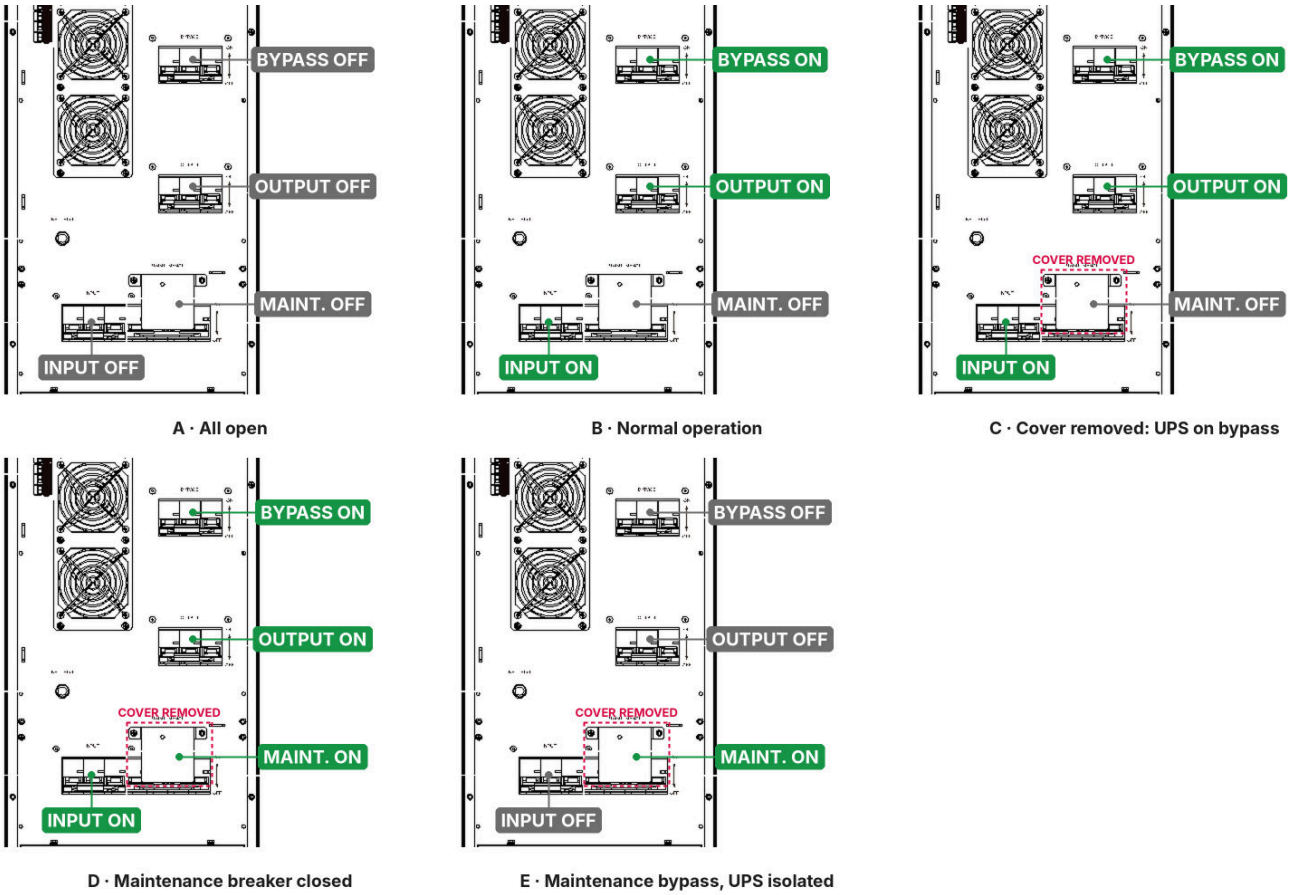

FIGURE 6-1 Breaker states A to E used in the procedures — green ON, gray OFF

6.2 Before starting

Check, before the first start:

- All connections are tight and the AC cable colors follow the specification.
- The UPS is properly grounded.
- The neutral-to-ground voltage is below 5 V AC.

- If a remote monitoring device is fitted, the RS-485 wiring is correct.
- If an external battery cabinet is used, its wiring to the UPS is correct and secure.
- The battery plug-in of every installed module is plugged in (Figure 4-28).
- The cables are routed neatly and tied according to good practice.
- The installation and wiring allow future changes, expansion and maintenance.
- The output has no short circuit and the load does not exceed the UPS rating.
- The cover of the maintenance breaker is fitted and the maintenance breaker is OFF.

6.3 Starting the UPS

1. Check that all breakers are open (Figure 6-1, state A).
2. Close the upstream utility and bypass breakers, then the **INPUT**, **BYPASS** and **OUTPUT** breakers on the rear panel (Figure 6-1, state B). Close the DC breaker of the external battery cabinet, if any. You see: the touchscreen lights; after initialization the bypass feeds the output (Figure 5-5).
3. Press both ON keys under the touchscreen together for 1 s (Figure 2-3, item 7), or use the on/off icon (Section 5.8). The UPS starts.
4. Wait about 10 s. You see: the power path runs from Mains through REC. and INV. to Output (Figure 5-3); the AC/DC and DC/AC indicators are green.
5. When the UPS is running steadily, switch on the loads.
6. Charge the battery for 10 hours before you rely on the full runtime. The UPS can be used while it charges.

> ⚠ ***CAUTION***
>
> Switch on the largest loads first and the smallest last, so that starting a large load does not trigger the overload protection.

6.4 Starting on battery (cold start)

Use the cold start when there is no utility power and the load must run from the battery.

1. Check that the battery plug-ins are plugged in (and the external battery breaker is closed, if any), and that the **OUTPUT** breaker is closed.
2. Press the **BATT. Start** button on the rear panel (Figure 2-4, item 4) and wait until the buzzer has sounded for 7 s. The UPS powers its control circuits and the touchscreen from the battery.
3. Press both ON keys together for 1 s. The UPS starts on battery (Figure 5-4).

> **i NOTE** The battery start works only when there is no utility power.

6.5 Shutting down the UPS

1. Switch off the loads and let the UPS run with no load for about 10 minutes to cool down.
2. Press both OFF keys together for 1 s (Figure 2-3, item 8). The UPS shuts down. If the bypass is present, it still feeds the output.
3. Open the external battery breaker, if any, then the **INPUT**, **BYPASS** and **OUTPUT** breakers (Figure 6-1, state A), and the upstream breakers.
4. To isolate the internal battery, unplug the battery plug-ins of the modules.

6.6 Maintenance bypass

Use the maintenance bypass to service the UPS without interrupting the load. The load is then fed straight from the bypass supply, without protection.

6.6.1 Transferring the load to the maintenance bypass

1. Check that the UPS is in normal mode (Figure 6-1, state B) and that the bypass is normal (bypass icon not red).
2. Remove the cover of the **MAINTENANCE** breaker (Figure 2-4, item 11). The door switch opens: the UPS turns its inverter off and transfers the load to bypass (Figure 6-1, state C). You see: the power path runs through the bypass (Figure 5-5).
3. Close the **MAINTENANCE** breaker (Figure 6-1, state D). You see: the touchscreen shows the maintenance-bypass output (Figure 5-7).
4. Open the **INPUT**, **BYPASS** and **OUTPUT** breakers (Figure 6-1, state E). Open the external battery breaker and unplug the battery plug-ins. The load is now fed through the maintenance bypass; the UPS input and output are disconnected and the UPS can be serviced.

> ⚠ ***DANGER***
>
> In state E the bypass input terminals, the output terminals and the maintenance breaker are still live, and the battery terminals are live while the battery is connected. Wait 10 minutes after the touchscreen goes dark and check with a voltmeter before you touch anything inside.

6.6.2 Returning from the maintenance bypass to the inverter

1. Plug in the battery plug-ins and close the external battery breaker, if any.
2. Close the **INPUT**, **BYPASS** and **OUTPUT** breakers, in that order (Figure 6-1, state D).
3. When the UPS is powered and the touchscreen shows the bypass output voltage, open the **MAINTENANCE** breaker (Figure 6-1, state C).
4. Refit the cover of the **MAINTENANCE** breaker (Figure 6-1, state B).
5. Press both ON keys to start the inverter (Figure 5-3).

6.7 Emergency power off (EPO)

Press the red EPO button on the front panel (Figure 2-3, item 9), or open the remote EPO loop on the EPO dry contact (Figure 2-7, item 1). The UPS cuts the inverter and the bypass output at once: the load loses power. The touchscreen reports an EPO fault.

To recover: remove the cause, close the EPO loop again (release the remote switch), let the UPS shut down completely, then start it as in Section 6.3.

6.8 Parallel system

6.8.1 Starting a parallel system

> ⚠ ***CAUTION***
>
> Make sure every UPS has the parallel kit and is set to the same parallel mode, with a different Parallel UPS ID on each unit (Section 5.5.7). Do not connect any load until the whole system has started, and make sure all UPS breakers are open before you begin.

1. Check that every UPS is installed correctly, then start each UPS in turn as in Section 6.3, with its **OUTPUT** breaker open.
2. When every UPS is on inverter, measure the inverter voltage of each one: the difference between the highest and the lowest must be within 8 V.
3. Close the **OUTPUT** breakers and measure the circulating current between the units: it must be below 3 A.
4. Close the main output breaker and each output branch breaker, then switch on the loads one at a time.

If the voltage difference exceeds 8 V, check that every output reads 120 V line-to-neutral; if the difference exceeds 15 V, contact AEC service. A high circulating current causes inverter faults: if it exceeds 3 A, contact AEC service.

6.8.2 Shutting down a parallel system

Avoid starting and stopping a parallel system frequently.

1. Switch off all loads.
2. Shut down the UPS units one at a time.
3. Open the breakers of each UPS. In daily use the breakers can stay closed.

6.8.3 Removing a UPS from a parallel system

If one UPS of a parallel system fails, it leaves the system automatically and alarms. To isolate it completely for live maintenance or replacement, follow Figure 6-2: shut the faulty UPS down (Section 6.5), then open its input, bypass, battery and output breakers, which connect it to the system.

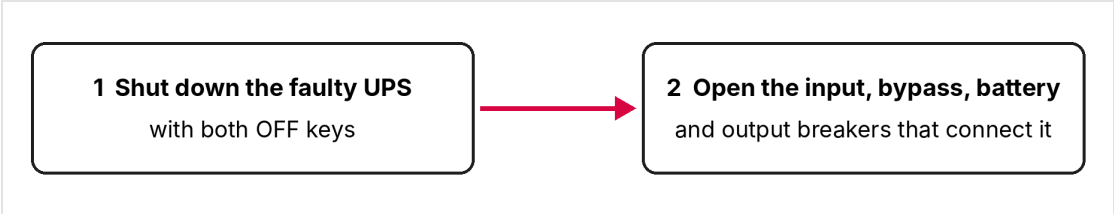

FIGURE 6-2 Removing a faulty UPS from a parallel system

⚠ CAUTION

While the parallel system is running normally, do not disconnect a UPS output from the system before that UPS has been shut down: the supply to the load could be disturbed.

6.8.4 Redundancy

In an N+1 redundant system the total load must not exceed N times the rating of one UPS. If one UPS fails, it can leave the system or rejoin it without affecting the load, which increases reliability. When the load exceeds N times the rating of one UPS, each UPS loaded above N/(N+1) of its rating raises an overload alarm. Example: in a 1+1 system, a UPS loaded above 50 % of its rating raises an overload alarm.

07

CHAPTER 7

Troubleshooting

Common problems, the fault messages and buzzer signals, and what to do.

Table 7-1 covers common problems only. If in doubt, contact AEC service.

TABLE 7-1 Troubleshooting

Symptom	Possible cause and remedy
Utility power is normal and the UPS starts, but it runs on battery and the buzzer beeps intermittently.	Check the contactors and terminals of the input circuit. Check on the touchscreen whether the utility voltage or frequency is outside the UPS input range (Figure 5-9). Check whether the **INPUT** breaker or the upstream breaker is open; if so, close it.
Applying power after installation blows a fuse or trips a breaker.	Short circuit in the UPS input or output wiring.
The touchscreen and output are normal, but the output stops as soon as a load is connected.	Severe overload or short circuit on the output: reduce the load or find the short circuit (often a faulty power strip, or a damaged load). Or the loads were not switched on largest first: restart the UPS and, when it is steady, switch on the largest loads first.
Long beep, fault indicator on, UPS on bypass, inverter fault.	Output overload — the load exceeds the UPS rating: reduce it or use a larger UPS (a short transfer to bypass when a load starts, which clears by itself, is normal). Or over-temperature protection: check that the air inlets and outlets are clear and the room temperature is within range.
The UPS normally works, but on a utility failure it does not go to battery, or goes to battery and shuts down on low battery almost at once.	Aged battery with lost capacity: replace it. Charger fault: the battery is not being charged. Battery plug-in not plugged in, battery cable loose or bad terminal contact.
With computer loads, everything works, but on a utility failure the computers hang although the UPS keeps running.	Poor grounding: the neutral-to-ground voltage is too high.

TABLE 7-2 Fault messages and buzzer signals

No.	Fault	Buzzer	Meaning and action
1	EPO	Long beep	Emergency power off active: bypass and inverter outputs are off (Section 6.7).
2	Mode fault	Long beep	The system mode setting does not match the actual wiring: check the utility or bypass wiring and make the system match the set mode.
3	Maintenance bypass fault	Long beep	Maintenance-bypass protection, inverter output off: check that the cover of the maintenance breaker is fitted and the door switch is closed (Figure 4-29).
4	Output fault	Long beep	Output fault: check the output for a short circuit or overload.
5	Mode mismatch	Long beep	The input/output mode of this UPS does not match the parallel system.
6	Voltage mismatch	Long beep	The output voltage of this UPS does not match the parallel system.
7	Frequency mismatch	Long beep	The frequency of this UPS does not match the parallel system.
8	Bypass mismatch	Long beep	The bypass voltage or frequency setting of this UPS does not match the parallel system.
9	Pattern mismatch	Long beep	The parallel mode setting of this UPS does not match the parallel system.

No.	Fault	Buzzer	Meaning and action
10	Power mismatch	Long beep	The output power setting of this UPS does not match the parallel system.
11	Battery number mismatch	Long beep	The battery quantity setting of this UPS does not match the parallel system.
12	Parallel mismatch	Long beep	The parameter settings of this UPS do not match the parallel system.
13	Short mismatch	Long beep	The "bypass disable when short circuit" setting of this UPS does not match the parallel system.
14	Two-ended fault	Long beep	Both parallel cables of this UPS disconnected.
15	Single-ended fault	Slow beep	One parallel cable of this UPS disconnected.
16	Auxiliary power supply failure	Long beep	Internal power supply failure. If it does not recover by itself, contact AEC service.
17	Fan failure	Rapid beep (about every 0.2 s)	Fan fault warning: check the fans for damage or blockage.
18	CAN fault	Slow beep (about every 2 s)	Parallel CAN communication fault: check the parallel cables for damage, or whether only one UPS of the system is running.
19	SCI fault	Long beep	Internal communication fault. If the alarm persists, contact AEC service.
20	No redundancy in the parallel UPS	Slow beep (about every 2 s)	The total load of the parallel system exceeds the redundancy limit (Section 6.8.4).
21	Mains abnormal	Long beep, or 3 beeps every 10 s	Long beep: utility input phase sequence wrong — check the input wiring. 3 beeps every 10 s: utility input missing neutral, power failure, overvoltage, undervoltage, over- or under-frequency — check the utility input.
22	Bypass abnormal	Slow beep (about every 2 s)	In utility mode the bypass voltage, frequency or phase sequence is abnormal, or the mode setting does not match the wiring. Check that the **BYPASS** breaker is closed, the bypass phase sequence, and that the bypass wiring matches the system mode.
23	Battery abnormal	Slow beep, rapid beep, or no beep	Slow beep (about every 2 s): battery overvoltage protection, charging fuse failure or overvoltage alarm — check the battery. Rapid beep (about every 0.2 s): battery wiring fault, charger short circuit, undervoltage protection or undervoltage warning — check the battery wiring, the plug-ins and the battery status. No beep: battery charging temperature too high.
24	Rectifier abnormal	Rapid beep (about every 0.2 s)	Rectifier fault. Contact AEC service.
25	Inverter abnormal	Long beep	Inverter fault. Contact AEC service.

i NOTE The buzzer signals above apply with the UPS on and the buzzer not silenced. With the UPS off, or with the buzzer silenced, the messages appear on the touchscreen without sound.

CHAPTER 8

08 Network monitoring

The AEC SNMP-L network card and the AEC monitoring software.

8.1 The SNMP-L card

The SNMP-L card puts AUREON on your network: the card's web page in any browser, SNMP V1/V2c/V3 with the standard RFC 1628 UPS MIB, and e-mail alarms. It fits SLOT1 or SLOT2 at the top right of the rear panel (Figure 2-4, items 6 and 7).

1. Fit the card in the slot with the UPS off, and connect it to your network with an RJ45 cable.
2. On a Windows PC in the same network, install the AEC card finder (AEC WiseFind_Setup.exe, in the AEC app › Support › Downloads › SNMP › SNMP-L) and press **Search**: the card appears at its factory address 192.168.0.100.
3. Select the card › **Network** › **Use Following Static IP**: give it a free address of your network, its netmask and gateway (ask your IT department). The card does not work at the factory address.
4. Open the card's web page and log in with the account **admin** and the password given by AEC technical service. Change the password at the first login.
5. **Setting › Serial port setting:** baud rate 9600 on COM1 and COM2 (interface RS-232, 8 data bits, 1 stop bit, no parity).
6. **Management › Device management › UPS › Edit:** set the communication protocol to the three-phase UPS entry **WRWF-1201-04_3I3O** (the exact label in the list), and enter the UPS data from its label.
7. **Home** shows the UPS values: the card reads the UPS. Then set the e-mail alarms (**Management › Alarm management**).

Nothing needs to be changed on the UPS touchscreen.

8.2 AEC monitoring software

TABLE 8-1 AEC monitoring software (license-free, in the AEC app › Support › Downloads › SNMP)

Program	What it does
AEC card finder (WiseFind)	Finds the SNMP-L cards on the network, sets their IP address and opens the card's web page.
AEC multi-UPS monitor (WiseInsight)	Watches one or many UPS (up to 1,000) from a Windows PC: live data, events, e-mail and audible alerts, a site map.
AEC shutdown agent (WiseClose)	Runs on a PC or server fed by the UPS and shuts it down safely before the battery runs out.

✓ TIP Step-by-step instructions for the card, every web page, SNMP and the programs: AEC SNMP-L Network Card User Manual, in the AEC app (Support › Downloads › SNMP › SNMP-L).

CHAPTER 9

09 Maintenance

Routine maintenance, the maintenance schedule, battery care, replacing a battery module and the service life of the parts that wear.

9.1 Routine maintenance

To keep the UPS efficient and reliable, regularly:

- clean the UPS with a dry cloth (never liquid or spray cleaners), with the UPS shut down;
- check that the input and output connections are tight;
- check the cooling fans and keep the air inlets and outlets clear; have a damaged fan replaced promptly; run the dedust cycle (Section 5.5.8);
- check the battery voltage and the UPS operating status, so that any fault is found early.

9.2 Maintenance schedule

TABLE 9-1 Maintenance schedule

Interval	Task
Weekly	Look at the touchscreen: normal (inverter) mode, no active fault, load within the rating.
Monthly	Check that the vents are clear and the fans run; check the room temperature (23–104 °F, −5 to +40 °C; best 68–77 °F).
Every 6 months	Battery test (Section 5.5.3); check the battery voltage and that no block is swollen or leaking.
Yearly	AEC service: inspection of the power connections (tightness, signs of heating), fans, capacitors and firmware.
After any alarm	Read the current faults and the history record (Section 5.6, Section 5.4.2) and look the fault up in Table 7-2; call AEC support if it persists.

9.3 Battery care

Battery life depends on the ambient temperature and on the number of discharges: long periods at high temperature, and deep discharges, shorten it.

- Charge the battery for 10 hours before first use. The UPS can be used while charging, but if the utility fails during this first charge the runtime may be shorter than rated.
- Every 4 to 6 months, discharge the battery until the UPS shuts down on low battery, then recharge it. In hot climates, do this every 2 months. Recharge the battery for more than 10 hours each time.
- If the UPS is not used for a long time, recharge the battery for more than 10 hours every three months.
- Battery life is typically 3 to 5 years. Replace a weak battery promptly; replacement must be done by authorized personnel.

9.4 Replacing a battery module

The battery modules are hot-swappable: a module can be replaced while the UPS runs on utility power. During the replacement the runtime is shorter.

1. Open the front door (Figure 2-1, item 9).
2. Unplug the battery plug-in of the module (Figure 2-1, item 7).
3. Remove the fixing screws (Figure 4-14) and slide the module out with its handle. Two people are needed: the module weighs 99–132 lb (45–60 kg).
4. Slide in the new module, fit the screws and plug in its plug-in.
5. Close the door. Check the battery information page (Figure 5-11).

> ⚠ ***WARNING***
>
> Replace modules only with AEC modules of the same type. Replace aged batteries as a full set: do not mix old and new modules. Dispose of used lead-acid batteries according to local regulations: they must be recycled.

9.5 Component life

TABLE 9-2 Typical service life at 77 °F (25 °C)

Component	Typical life	Action
Cooling fans	5–7 years	Replaced at the end of the period or when an alarm reports them.
DC bus electrolytic capacitors	7–10 years	Replaced by AEC service.
AC filter capacitors	5–7 years	Replaced by AEC service.
VRLA batteries (5-year design life)	3–5 years	Replace as a full set; life halves for every 18 °F (10 °C) above 77 °F.

Life is shorter at higher temperature, in dusty rooms and under continuous heavy load. The figures are typical for online UPS; AEC service plans replacement during preventive maintenance. The fan and bus-capacitor operating times can be shown on Run info. (Section 5.5.7).

CHAPTER 10

10 Packaging, transport and storage

How AUREON is packed, and how to move and store it safely.

10.1 Packaging

Keep the package in the orientation it shows. The sides of the package carry handling symbols (keep dry, fragile, this way up, etc.) and the model; the front carries the product name.

10.2 Transport

Observe the handling symbols and avoid hard impacts. Keep the package in the marked orientation to protect the components. Do not ship flammable, explosive or corrosive materials with the UPS. Do not leave it in the open during transport: protect it from rain, snow, liquids and mechanical damage.

10.3 Storage

- Store the UPS in the marked orientation, with the package at least 8 in (200 mm) above the floor and at least 20 in (500 mm) from walls, heat and cold sources, windows and air inlets.
- Storage temperature −4 to +122 °F (−20 to +50 °C), relative humidity 20–80 %. The warehouse must be free of flammable, explosive or corrosive materials and harmful gases, strong vibration, impact and magnetic fields.
- Under these conditions the UPS can generally be stored for 6 months; after 6 months, inspect it again. With batteries, recharge the battery for more than 10 hours every 3 months.

APPENDIX A

A Technical specifications

Electrical, battery and general data of the three models.

TABLE A-1 AUREON 10–30 kVA specifications

Item	AUREON 10 · AUREON 20 · AUREON 30
Rating	10 kVA / 10 kW · 20 kVA / 20 kW · 30 kVA / 30 kW — output power factor 1
Input	
Input wiring · nominal voltage	3 phases + N + PE · 208 V line-to-line, 120 V line-to-neutral
Voltage range (line-to-neutral)	90–155 V AC at 100 % load; 70–90 V AC with the output derated linearly
Frequency range	39.5–70.5 Hz
Bypass synchronization window	60 Hz (or 50 Hz) ±10 %, auto-sensing
Bypass voltage window	+10 / +15 / +20 % and −10 / −15 / −20 % (default ±20 %)
Input power factor · current THD	≥ 0.99 · linear full load ≤ 3 %, non-linear full load ≤ 5 %
Maximum input current, per phase	37.0 A · 75.9 A · 100.0 A (Table 4-1)
Battery	
Type	VRLA, 12 V 9 Ah blocks in internal hot-swappable modules (20 blocks each), and/or external battery cabinet
Battery voltage	±96 to ±120 V DC (±48 to ±60 cells of 2 V; default ±60 cells, 10 + 10 blocks)
Internal battery modules	2–4 (default 2) · 3–4 (default 3) · 4
Maximum battery current	45.3 A · 91.6 A · 137.4 A
Charge current	1–10 A (default 1 A) · 1–20 A (default 2 A) · 1–20 A (default 4 A)
DC (cold) start	Yes (Section 6.4)
Output	
Output wiring	3 phases + N + PE
Rated output current, per phase	30.3 A · 60.6 A · 90.9 A
Voltage	208 V line-to-line, 120 V line-to-neutral (default); selectable 190 / 200 / 208 / 220 V line-to-line (110 / 115 / 120 / 127 V line-to-neutral)
Frequency	Utility normal: tracks the bypass. Utility abnormal: 60 ±0.1 Hz (or 50 ±0.1 Hz, setting)
Waveform · voltage distortion	Pure sine wave · linear full load ≤ 1 %, non-linear full load ≤ 4 %
Power factor	1 (0.9 or 1; factory setting 1)
Transfer time, inverter ↔ bypass	Synchronized < 1 ms; not synchronized < 10 ms
Efficiency	Up to 94 % (online); up to 98 % (ECO)
Overload, inverter	< 105 % continuous · 105–110 % 60 min · 110–130 % 10 min · 130–150 % 1 min · 150–200 % 200 ms · > 200 % immediate protection

Item	AUREON 10 · AUREON 20 · AUREON 30
Overload, bypass	< 130 % continuous · 130–155 % 1 min · > 155 % 200 ms
General	
Display	4.3-inch color touchscreen, 5 indicators, ON / OFF key pairs, EPO button
Communication	RS-485 and dry contacts (5 outputs, EPO + 1 input) standard; parallel kit, SNMP-L card, dry-contact card, Modbus protocol card (RS-232 / RS-485) optional
Parallel	Up to 4 units, redundant or capacity
Alarms	Battery low, utility abnormal, UPS fault, output overload, etc.
Protection	Battery undervoltage, overload, short circuit, over-temperature, input overvoltage, communication fault, etc.
Noise at 77 °F (25 °C)	< 60 dB · < 65 dB · < 65 dB
Operating · storage temperature	23–104 °F (−5 to +40 °C) · −4 to +122 °F (−20 to +50 °C)
Relative humidity	0–95 %, non-condensing
Altitude	Up to 6,560 ft (2,000 m); derate above (IEC 62040-3)
Enclosure · cooling	IP20 · fans, front to rear, speed follows the load
Dimensions W × D × H	14.9 × 39.1 × 49.2 in (378 × 993 × 1,250 mm) overall; cabinet 12.6 in (320 mm) wide
Weight, frame only	231 lb (104.8 kg) · 258 lb (117 kg) · 282 lb (127.9 kg)
Weight with internal batteries	465 lb (211 kg), 40 blocks; 699 lb (317 kg), 80 blocks · 609 lb (276 kg), 60 blocks; 726 lb (329 kg), 80 blocks · 750 lb (340 kg), 80 blocks
Battery module	20 × 12 V 9 Ah, 99–132 lb (45–60 kg)
Safety · emissions	UL 1778 listed (UL certificate E543003) · FCC Part 15, Class A
Warranty	3 years on the UPS, 2 years on VRLA batteries

Specifications are subject to change without notice. Weights with batteries are for the factory configurations AUR10-40X9A, AUR10-80X9A, AUR20-60X9A, AUR20-80X9A and AUR30-80X9A.

APPENDIX B

B Runtime

Typical runtime in minutes at 77 °F (25 °C), with new, fully charged internal batteries, by load as a percentage of the rated output power.

TABLE B-1 Runtime by configuration, minutes

Load	AUREON 10, 40 blocks (AUR10-40X9A)	AUREON 10, 80 blocks (AUR10-80X9A)	AUREON 20, 60 blocks (AUR20-60X9A)	AUREON 20, 80 blocks (AUR20-80X9A)	AUREON 30, 80 blocks (AUR30-80X9A)
10 %	190	380	150	220	120
20 %	85	175	65	100	50
25 %	70	145	52.5	82.5	40
30 %	55	115	40	65	30
40 %	38	85	27	45	20
50 %	25	60	18	32	14
60 %	18	45	13	23	10
70 %	14	35	10	18	8
75 %	12.5	31.5	9	16	7
80 %	11	28	8	14	6
90 %	9	24	6	12	5
100 %	7	20	5	10	4

Published AEC runtime data. Actual runtime depends on the load type, the temperature and the battery age; external battery cabinets extend it.

C

APPENDIX C

Drawings

AEC engineering drawings for AUREON 10–30 kVA (drawing set version 001): single-line diagram, appearance, installation, cooling and rear view. Dimensions in mm.

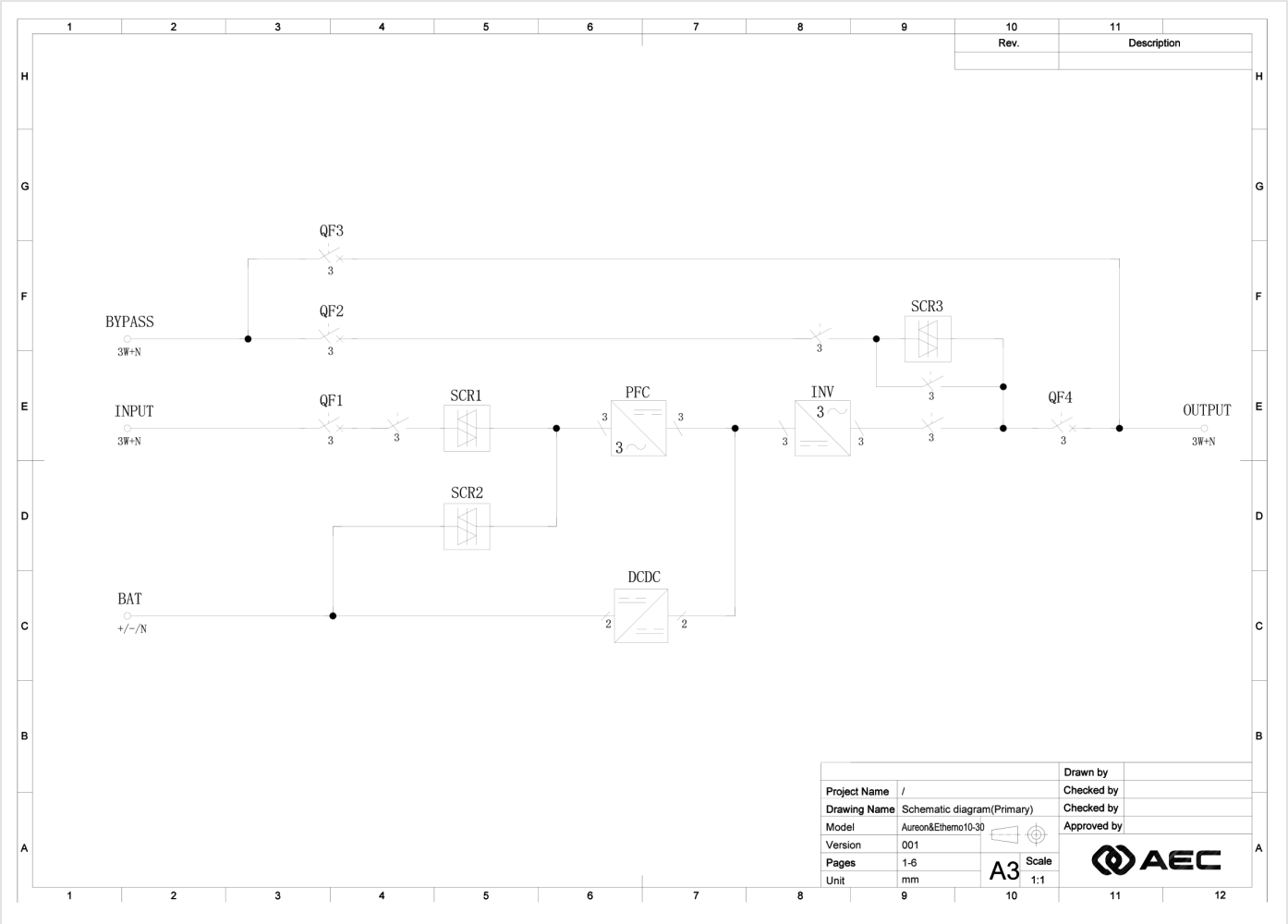

FIGURE C-1 Single-line diagram: QF1 input breaker, QF2 bypass breaker, QF3 maintenance breaker, QF4 output breaker; SCR static switches, PFC rectifier, INV inverter, DC/DC charger

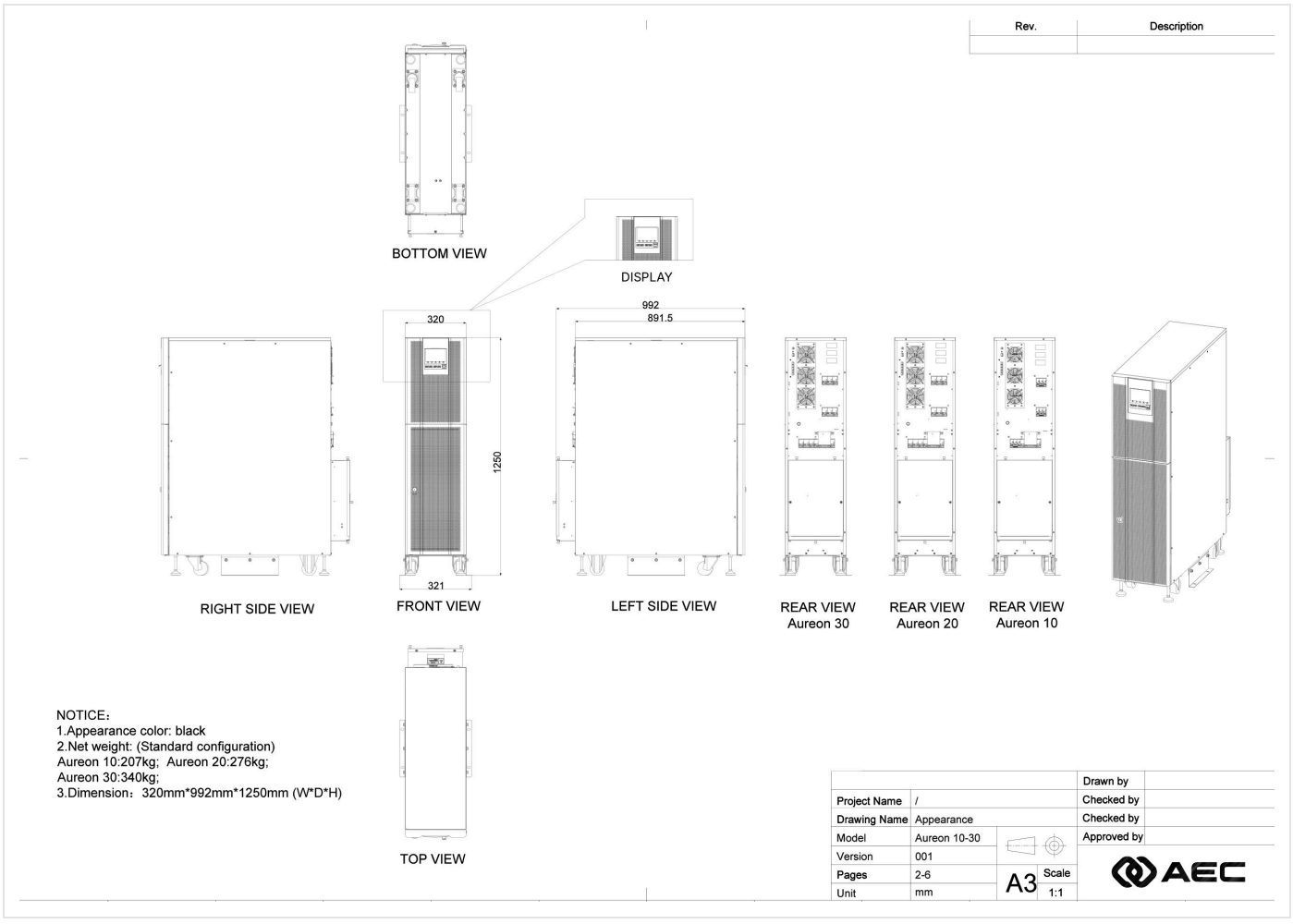

FIGURE C-2 Appearance: right side, front, left side, rear views of AUREON 10, 20 and 30, bottom and top views

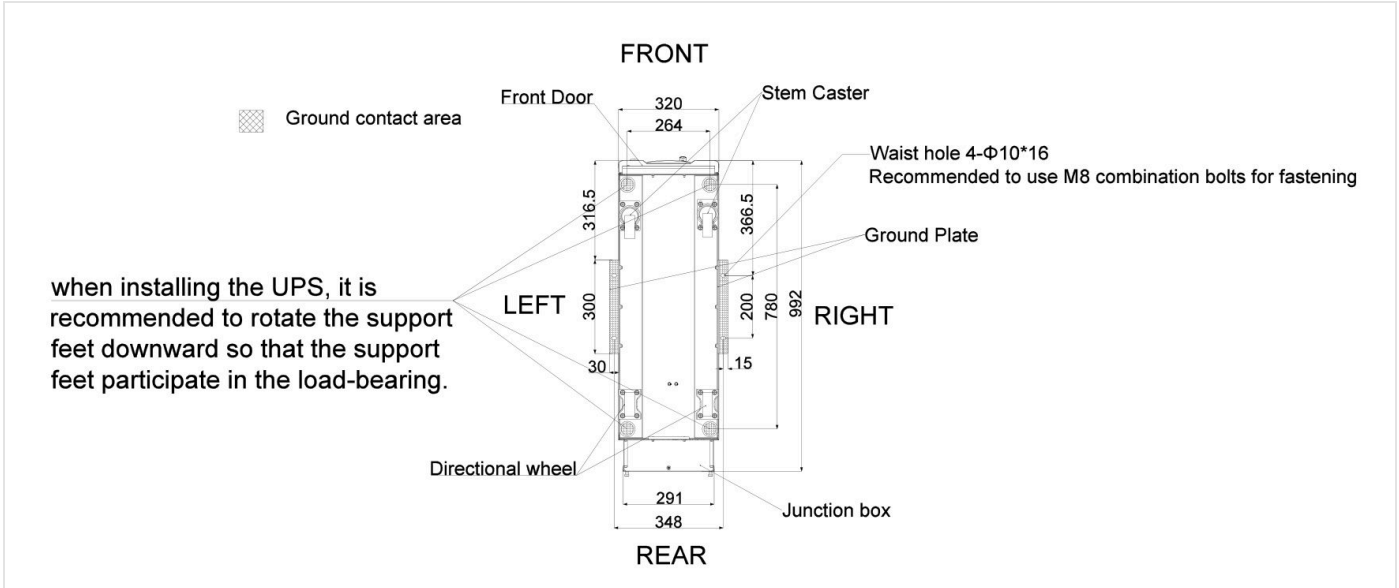

FIGURE C-3 Installation plan, bottom view: mounting slots 4 × Ø10 × 16 mm for M8 bolts, support plates, casters; lower the leveling feet to carry the load

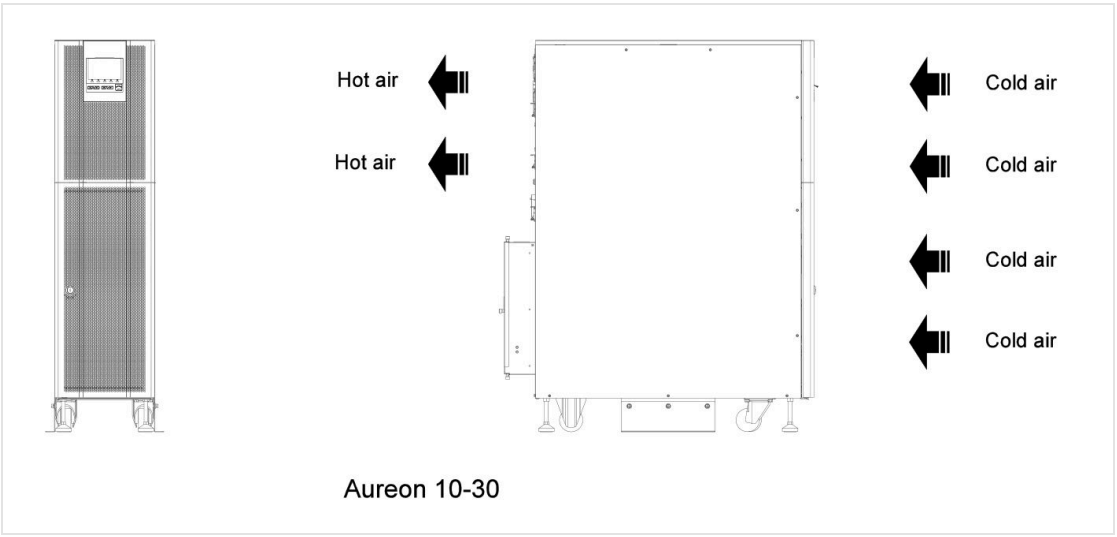

FIGURE C-4 Cooling: cold air in at the front, hot air out at the rear

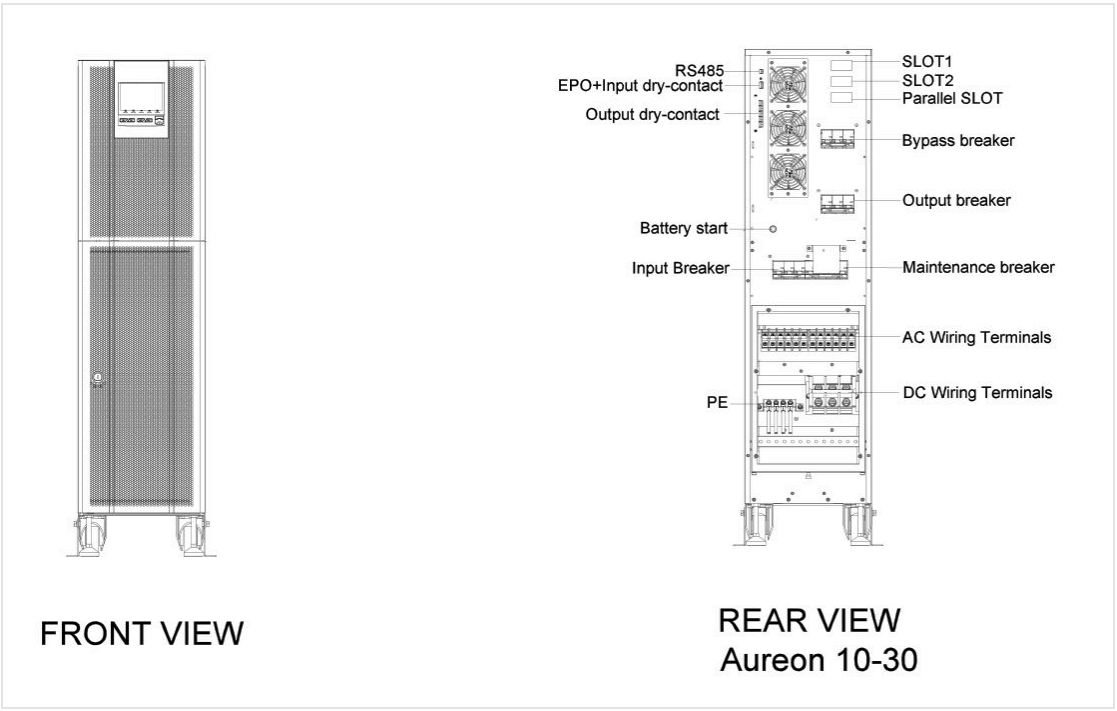

FIGURE C-5 Front and rear views with the rear panel parts named

TABLE C-1 Terminal data from the AEC wiring drawing

Terminal	Max. current, AUREON 10 / 20 / 30	Lug hole (drawing)	Bolt (drawing)	Conductor (AEC)
DC input + / N / –	45.3 / 91.6 / 137.4 A	Ø10.5 mm	M10	2 / 2 / 1/0 AWG
Battery PE	—	Ø6.5 mm	M6	2 / 2 / 1/0 AWG
AC input A, B, C, N	37.0 / 75.9 / 100.0 A	Ø4.5 mm	M4 (see note)	8 / 3 / 1 AWG
Bypass input A, B, C, N	30.3 / 60.6 / 90.9 A	Ø4.5 mm	M4 (see note)	8 / 3 / 1 AWG
Output A, B, C, N	30.3 / 60.6 / 90.9 A	Ø4.5 mm	M4 (see note)	8 / 3 / 1 AWG
PE	—	Ø6.5 mm	M6	8 / 3 / 1 AWG

Note: the recommended ring terminals for the AC terminals (...-6 types, hole B ≥ 0.24 in / 6 mm, Table 4-5) suggest larger studs than the M4 given on the drawing. Check the terminal before you choose the lugs, or ask AEC.

APPENDIX D

Acronyms and abbreviations

Terms used in this manual.

TABLE D-1 Acronyms and abbreviations

Term	Meaning
AC	Alternating current
AWG	American Wire Gauge
BB	Battery breaker
DC	Direct current
ECO	Economy (energy-saving) operating mode
EPO	Emergency power off
ESD	Electrostatic discharge
FCC	Federal Communications Commission
HMI	Human–machine interface (the touchscreen)
IGBT	Insulated-gate bipolar transistor
MBB	Maintenance bypass breaker
NC / NO / COM	Normally closed / normally open / common (dry contacts)
NEC	National Electrical Code (NFPA 70)
PE	Protective earth (ground)
PFC	Power-factor correction
RS-232 / RS-485	Serial communication standards (TIA-232 / TIA-485)
SNMP	Simple Network Management Protocol
THD	Total harmonic distortion
UPS	Uninterruptible power supply
USB	Universal Serial Bus
VRLA	Valve-regulated lead-acid (battery)

E

APPENDIX E

Frequently asked questions

Short answers to the questions AEC support hears most.

TABLE E-1 Frequently asked questions

Question	Answer
Should the UPS stay switched on?	Yes. Leave it on all the time: it protects the load and keeps the battery charged.
Is the output a pure sine wave?	Yes: the UPS is online double conversion, on utility and on battery.
What happens when the battery runs out?	The UPS switches its output off at the end of discharge, and restarts and recharges when the utility returns (Section 2.8.1).
Can I add battery modules later?	Yes, up to four per frame: AUREON 10 from 2 to 4, AUREON 20 from 3 to 4 (Section 4.7.1). Use AEC modules and keep the battery settings correct (Section 5.5.2).
Can I add an external battery cabinet?	Yes, on the EXTERNAL BATTERY terminals, with the same number of blocks per string (Section 4.8.3).
Can the UPS run from a generator?	Yes — see Section 3.3.
What is ECO mode?	The load runs on the bypass while the utility is good: higher efficiency, but no protection from disturbances. Use online mode for critical loads.
How do I monitor it on the network?	With the SNMP-L card — see Section 8.1.

APPENDIX F

F Installation record

Fill this record in at installation and keep it with the UPS: it is the first thing AEC support asks for.

TABLE F-1 Installation record

Item	Value
Model and ordering code	
Serial number	
Installation date	
Installed / commissioned by	
Site and room	
Input, bypass and output breaker ratings	
Conductor sizes	
Battery: internal modules (number), external cabinet (blocks, breaker)	
Output settings (voltage, frequency, mode)	
Parallel mode and UPS ID	
SNMP-L card IP address	
Load at start-up (kW, %)	
Battery test result and date	

Service and support

AEC technical support is available 24 hours a day, 7 days a week. For help with installation, start-up, alarms, settings, spare parts, warranty claims and service visits, contact us by WhatsApp, phone or e-mail.

TECHNICAL SUPPORT · 24/7	**+1 786 553 2100**	WhatsApp and phone — always available
SERVICE E-MAIL	**service.us@aecups.com**	Technical questions, service requests, warranty claims
SALES	**sales@aecups.com**	
ADDRESS	**AEC UPS USA LLC**	4872 SW 72nd Ave, Miami, FL 33155
WEB	**aecups.com**	

When you contact us, have ready: the model and ordering code, the serial number (on the rating label and in Device info.), the alarm shown under Current faults, the load and the battery set-up (modules, external cabinet) — a photo of the display and of the label speeds things up on WhatsApp.