AEC

THREE-PHASE ONLINE UPS · BATTERIES INSIDE

AUREON

10–30 kVA

Online double conversion for 208/120 V three-phase loads, with a three-level inverter and up to 80 VRLA blocks in modules inside one tower, 14.9 in wide at the base.



AUREON 10–30 kVA · DOOR OPEN

208/120 V
three-phase, 4-wire + PE

PF 1
output power factor 1: kVA = kW

94 %
efficiency online; 98 % in ECO

Touchscreen
4.3-inch color display: every setting on the screen

Product Overview
AUREON 10–30 kVA

An online double-conversion UPS for 208/120 V three-phase loads, 10 to 30 kVA, with 40 to 80 VRLA blocks inside the same tower.

40–80
VRLA blocks inside
12 V 9 Ah blocks in 2 to 4 modules; external cabinets on BATT.+, N, BATT.–

kVA = kW
Output power factor 1
10, 20 and 30 kW of real power

94 %
Three-level inverter
online efficiency up to 94 %, 98 % in ECO on a single unit

208/120 V
Three-phase, 4-wire
3 + N + PE in and out; 120 V L-N, settable 110 to 127 V

Touch
Color touchscreen
power flow, settings, tests and records, three access levels

×4 · N+1
Parallel
up to four units for power or redundancy

Key data

Ratings	10, 20 and 30 kVA / kW
Input and output	208/120 V three-phase, 4-wire + PE; 60 Hz
Battery	VRLA, 12 V 9 Ah, 40 to 80 blocks inside; ±96 to ±120 V DC
Efficiency	up to 94 % online · up to 98 % in ECO
Size, W × D × H	14.9 × 39.1 × 49.2 in, width at the base · 378 × 993 × 1,250 mm
Operating temperature	23–104 °F (–5 to 40 °C)
Standards	UL 1778 listed · performance IEC 62040-3
Warranty	3 years on the UPS · 2 years on the VRLA batteries

10 kVA	20 kVA	30 kVA
10,000 W · 40 or 80 blocks inside	20,000 W · 60 or 80 blocks inside	30,000 W · 80 blocks inside
up to 20 min at full load	up to 10 min at full load	up to 4 min at full load

Front View
AUREON 10–30 kVA

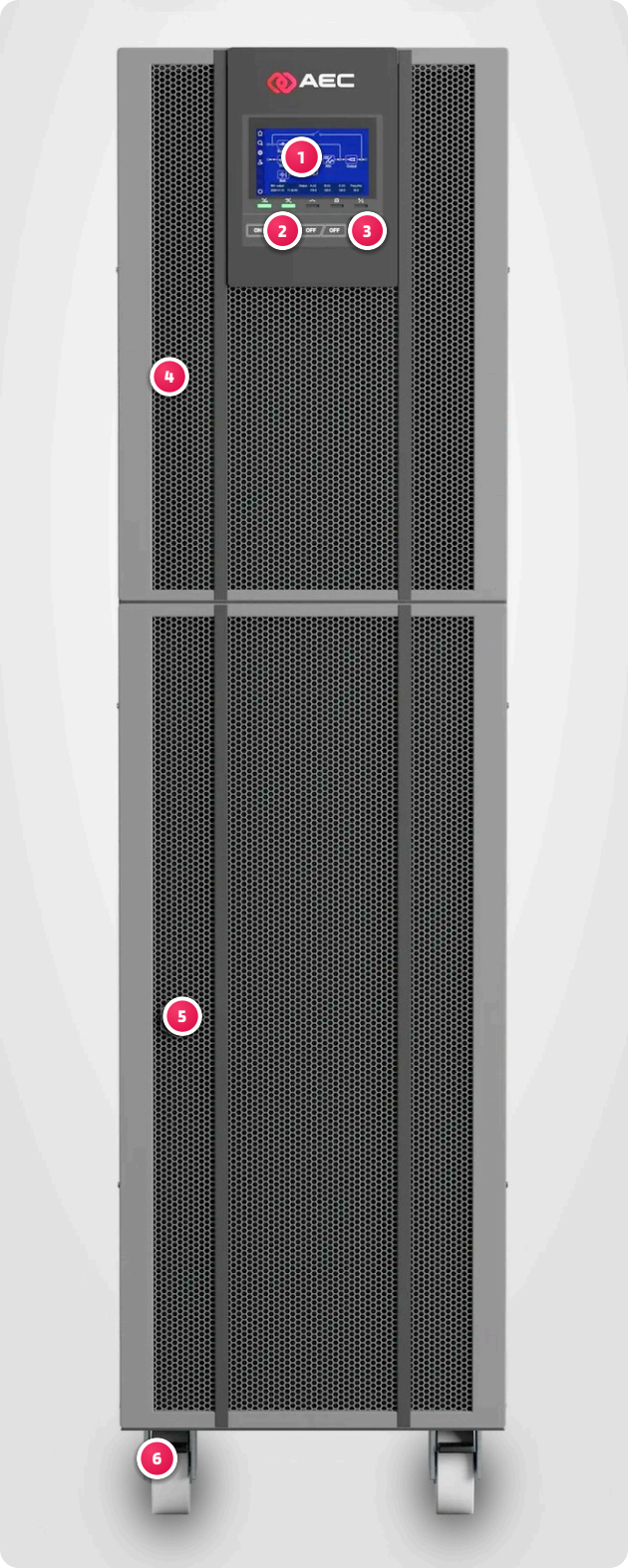

1. **Color touchscreen**
   4.3-inch: live single-line diagram, readings, settings and records

2. **Status lamps and keys**
   five lamps above the ON and OFF key pairs

3. **EPO**
   emergency power off: the output is cut at once

4. **Front grille**
   cooling air in at the front, out through the fans at the rear

5. **Front door**
   lockable; behind it 2 to 4 battery modules of 20 VRLA blocks, each with its breaker

6. **Casters**
   moved upright, then anchored with four M8 bolts and leveled on four feet

14.9 × 39.1 × 49.2 in
W × D × H, every rating; width at the base · 378 × 993 × 1,250 mm

Rear View
AUREON 10–30 kVA

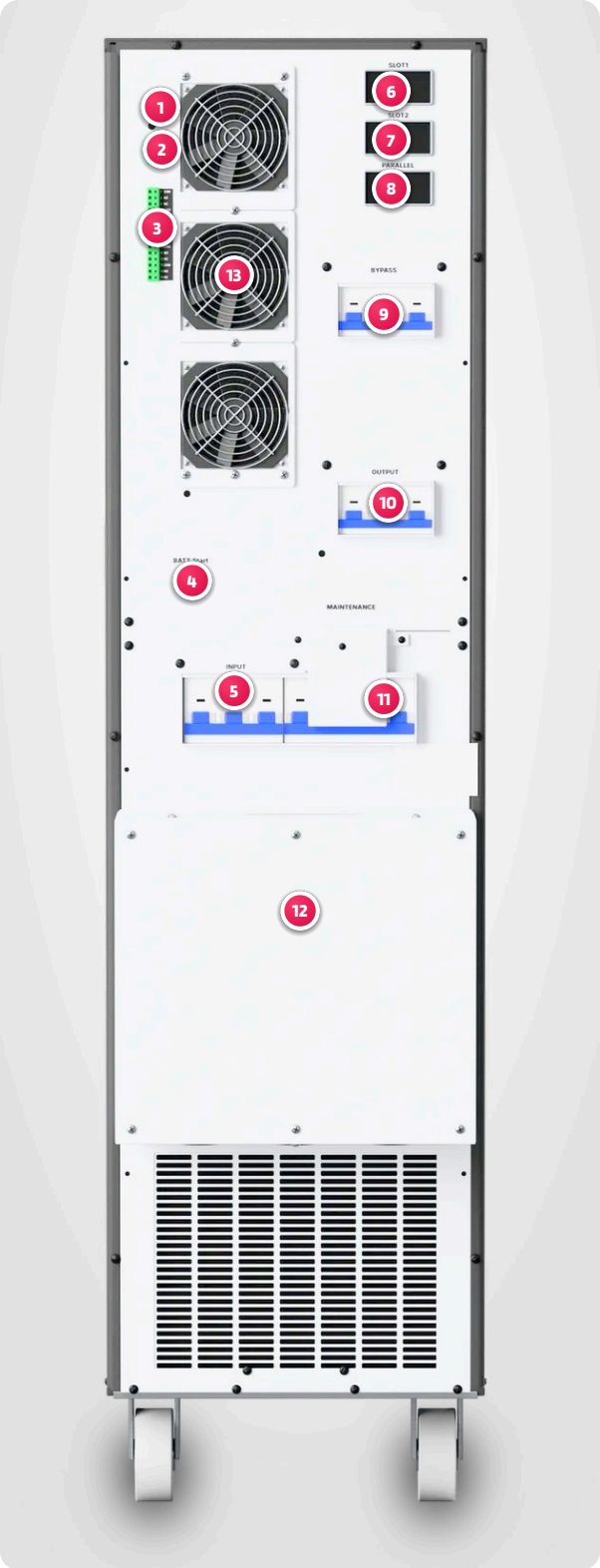

1. **RS485**
   Modbus link to a PC or BMS
2. **EPO + input dry contact**
   EPO loop (closed for normal operation) and input IN.1
3. **Output dry contacts**
   OUT.1 to OUT.5, NO / NC / COM
4. **BATT. Start**
   Starts the UPS from the battery when there is no mains
5. **Input breaker**
   Mains input
6. **Intelligent slot 1**
   SNMP card
7. **Intelligent slot 2**
   Dry-contact card, protocol-transfer card or SNMP card
8. **Parallel port**
   Two parallel cable sockets
9. **Bypass breaker**
   Bypass input
10. **Output breaker**
    UPS output
11. **Maintenance breaker**
    Behind an interlocked cover
12. **Wiring box**
    AC terminals and PE; BATT.+, N, BATT.– for external batteries, cables from below
13. **Fans**
    Speed controlled by the load

Internal View
AUREON 10–30 kVA

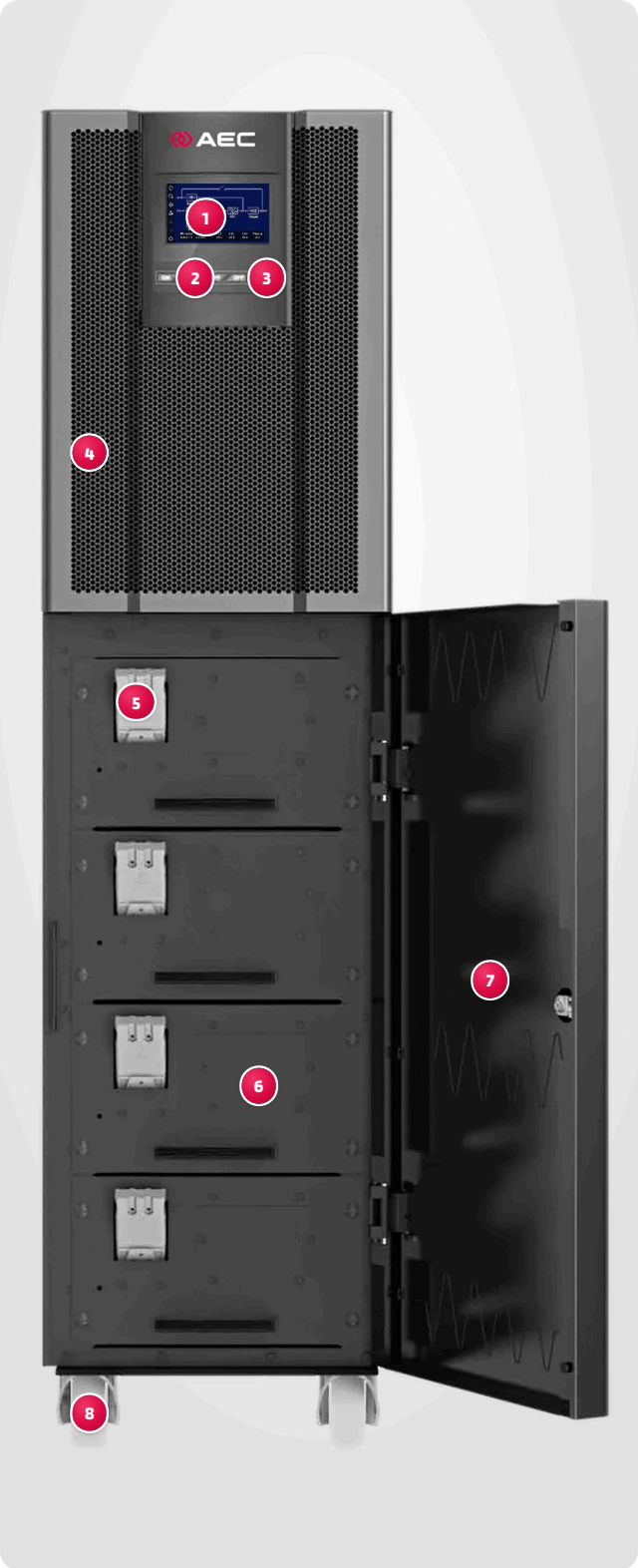

1. **Color touchscreen**
   the same panel and screen as ETHERNO

2. **Status lamps and keys**
   five lamps above the ON and OFF key pairs

3. **EPO**
   emergency power off: the output is cut at once

4. **Front grille**
   cooling air in at the front

5. **Module breaker**
   one on each battery module, opened before service

6. **Battery modules**
   2 to 4 modules of 20 × 12 V 9 Ah VRLA blocks, 99.2–132.3 lb each

7. **Front door**
   lockable, opened for battery service

8. **Casters**
   moved upright, then anchored and leveled on four feet

Touchscreen Interface
AUREON 10–30 kVA



SCREEN

1 Color touchscreen
4.3-inch: the live single-line diagram (here normal mode, the load on the inverter), readings, settings and records. Its left bar carries the menus, the log-in and an ON/OFF icon.

Three password levels
user (reads), administrator (sets) and manufacturer: everything is accessible from the display, without a PC or external software.

STATUS LAMPS

2–6 AC/DC · DC/AC · BYP. · BATT. LOW · OVERLOAD
one lamp for each part of the UPS: green in normal operation, red when that part is abnormal.

KEYS

7 ON pair
both ON keys together for 1 s: the UPS powers on.

8 OFF pair
both OFF keys together for 1 s: the UPS powers off.

9 EPO
the output is cut at once, bypass and inverter both. The EPO loop on the rear panel does the same from afar.

Screens · the same panel as ETHERNO

The home page draws the UPS at work, the yellow dots tracing the power, and reads the output phase by phase (L-N; the nameplate gives line voltage). A touch on a block opens its readings.

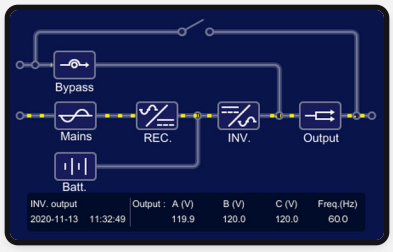

Home page, normal mode
Mains, rectifier, inverter, load: the power traced in yellow; the output read phase by phase at 120 V.

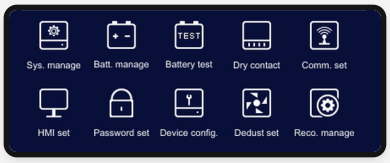

Settings, behind the log-in
Ten setting pages: system, battery, tests, dry contacts, communication, screen, password, device, dedust, records.



Output set
120 V per phase at 60 Hz, a fine adjustment of the voltage; saved with a green tick.

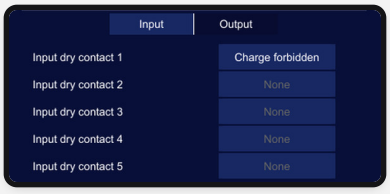

Input dry contact
Input 1 set to charge forbidden; each input takes one function from the list.

4.3 in
color touchscreen

5
status lamps, green or red

3
password levels, no PC needed

5
working modes, each drawn live

Touchscreen Screens
AUREON 10–30 kVA

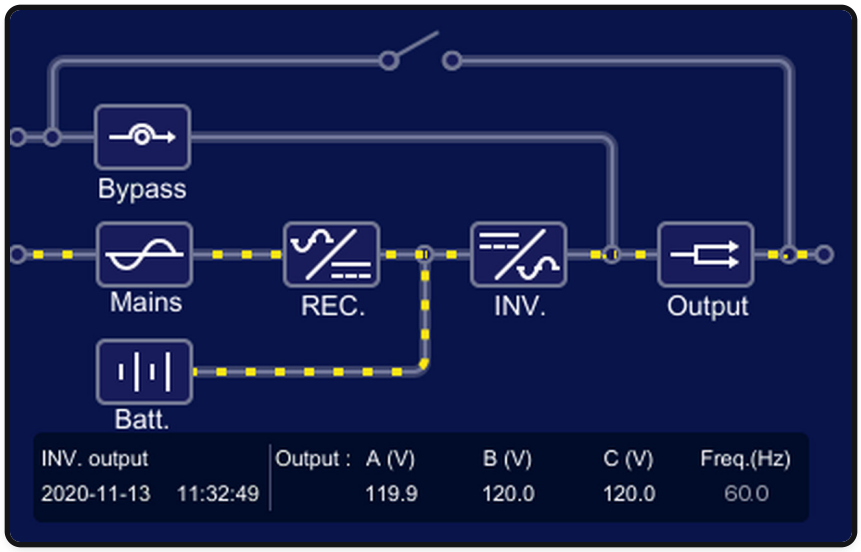

Live single-line diagram

The home page draws the UPS as it runs: yellow dots trace the active power path (here mains, rectifier, inverter, output), a faulty block turns red, and the bottom line reads the output voltage of each phase and the frequency.

Touch any block (bypass, mains, battery, rectifier, inverter, output) to open its page; the bar at the left opens the menus, the log-in and the ON/OFF page.

Settings, behind the log-in

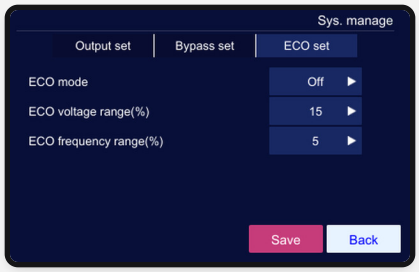

ECO setting
ECO on or off, with its voltage and frequency windows, in percent of nominal.



Bypass setting
The voltage and frequency window in which the static switch may transfer the load.



Output dry contacts
Five relays, each with its function: ECO output, battery abnormal, general alarm, bypass output, battery inverter output.



Battery test
Standard, deep or timed test, started from the screen; its status and its conditions shown.

Menus

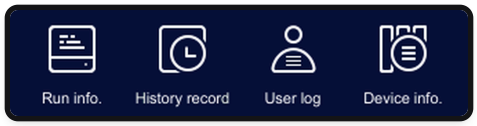

Information menu
Run info, history record, user log, device information.

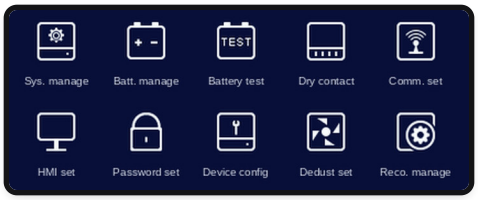

Settings menu
System, battery, battery test, dry contacts, communication, screen, password, device, dedust, records.

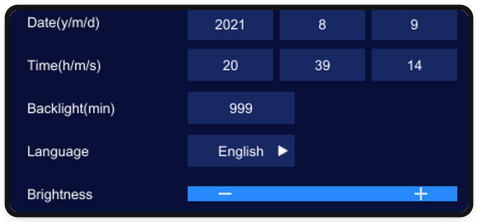

Screen setting
Date and time, backlight, language, brightness and the atmosphere light of the panel.

Smart Functions
AUREON 10–30 kVA

Functions built into every AUREON, each set and read on its touchscreen with three password levels: no PC, no external software.

1

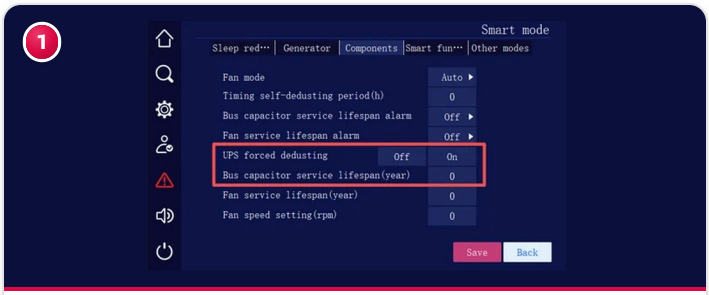

Fan self-cleaning — timed · forced

The fans run a dust-cleaning cycle on a timer or on demand (forced dedusting) to keep the air path and the electronics clean; fan and capacitor operating hours are counted on the screen.

2

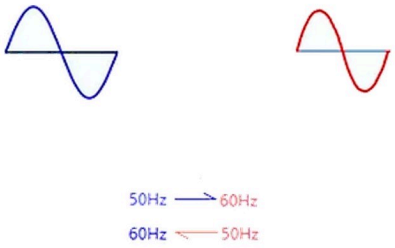

Frequency converter — 50 ↔ 60 Hz

Set on the device configuration page: the output runs at a fixed 50 or 60 Hz, whatever the input frequency, for loads built for another grid; the battery-not-connected warning can be disabled.

3

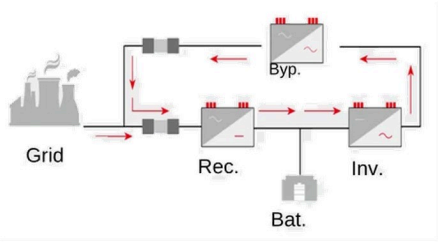

Self-load test — 10–100 %

The UPS tests itself at 10 to 100 % of its rating without a rented load bank: the power circulates through rectifier, inverter and bypass, drawing only about 2.7 % of the rated power.

4



Short-circuit capability — 10–200 ms

On an output short circuit the inverter holds the fault for a settable time, so the faulty branch trips and the other loads keep running; the bypass can be set to stay off on a short circuit.

5

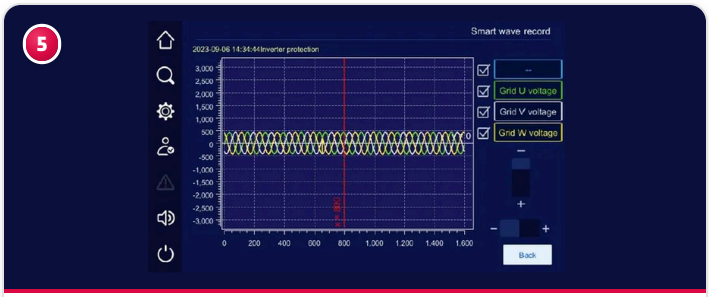

Waveform recording — built-in scope

An oscilloscope inside the UPS: the smart wave record captures the grid, rectifier and inverter waveforms around an event, shown on the screen phase by phase and kept for diagnosis.

6

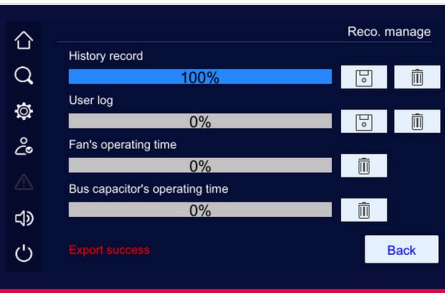

USB port behind the display — all records

A USB flash drive in the port behind the display takes the memory of the UPS: history record (up to 10,000 events), user log and wave capture, with no PC and no software.

Battery and Runtime
AUREON 10–30 kVA

Charging in stages

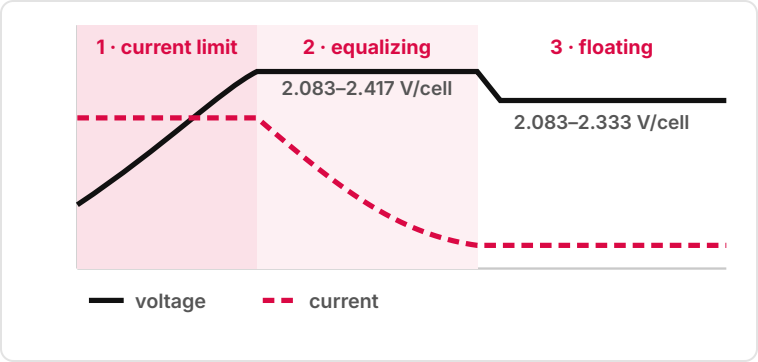

10 A

maximum charge current, AUREON 10 (1 A by default)

20 A

maximum, AUREON 20 and 30 (2 and 4 A by default)

- Equalizing charge 2.083–2.417 V/cell
- Floating charge 2.083–2.333 V/cell
- Capacity set from 1 to 2,000 Ah
- Static function: 1–30 days, delay 1–48 h

End of discharge

A low-voltage warning, then the protection level in V/cell:

2.083–2.333 floating charge

Warning battery low voltage

1.667–1.867 protection: output off

≈ 1 min the UPS switches off

Mains back: it restarts and recharges by itself.

Battery test

Started from the battery test page:

Standard | Deep | Timing

- Standard or deep test, or timed
- Ends at 1.667–1.867 V/cell, settable
- Shows status and battery current
- Consumed capacity and test time

Temperature

Charge voltage compensated for temperature:

0–2.8 mV/°F (0–5.0 mV/°C)

Compensation on or off, on the charge set page.

Heat shortens life

Long hours at high temperature and deep discharges age the blocks: where it is hot, a full discharge and recharge every 2 months instead of every 4 to 6.

Backup time by load

minutes · new batteries at 77 °F (25 °C) · blocks inside the tower

Load, % of rating	10 %	20 %	25 %	30 %	40 %	50 %	60 %	70 %	75 %	80 %	90 %	100 %
10 kVA · 40 blocks AUR10-40X9A	190	85	70	55	38	25	18	14	12.5	11	9	7
10 kVA · 80 blocks AUR10-80X9A	380	175	145	115	85	60	45	35	31.5	28	24	20
20 kVA · 60 blocks AUR20-60X9A	150	65	52.5	40	27	18	13	10	9	8	6	5
20 kVA · 80 blocks AUR20-80X9A	220	100	82.5	65	45	32	23	18	16	14	12	10
30 kVA · 80 blocks AUR30-80X9A	120	50	40	30	20	14	10	8	7	6	5	4

±96 to ±120 V

DC bus: 8 to 10 blocks on each side of the neutral, 10 + 10 by default; BATT.+, N and BATT. – for external cabinets

20 blocks

in each module, 99.2–132.3 lb, with its own breaker; 2 to 4 modules slide in from the front

10 h

charge before first use; a battery left unused, 10 hours every 3 months

Installation and Dimensions
AUREON 10–30 kVA

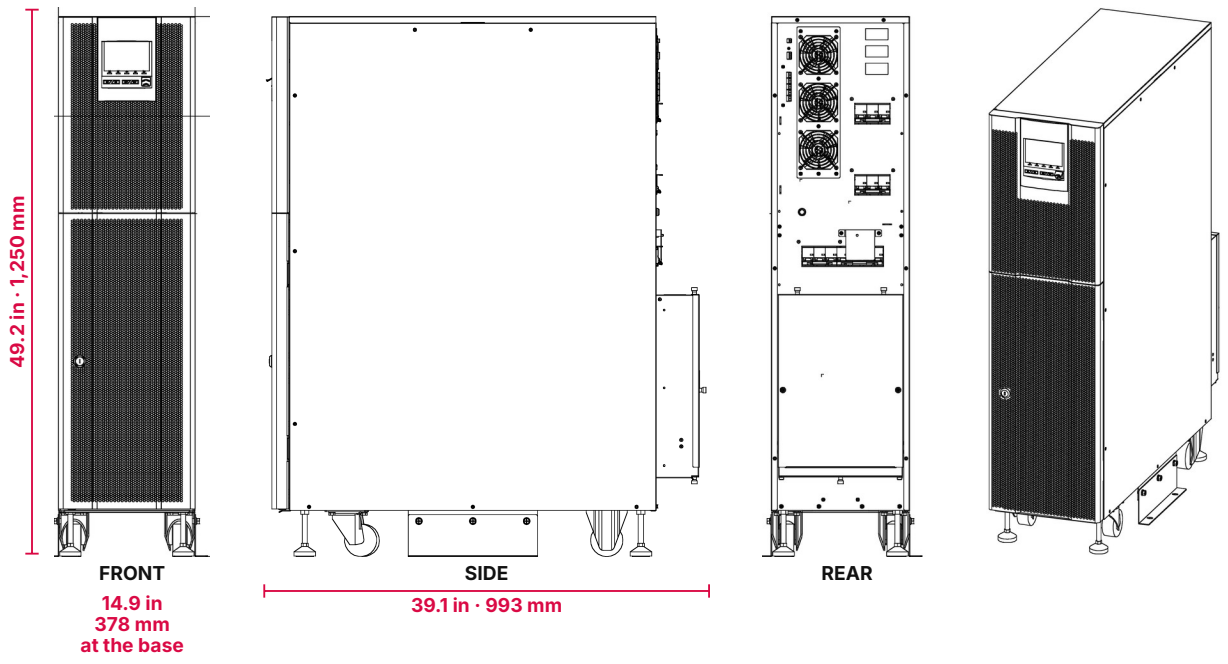

Air path

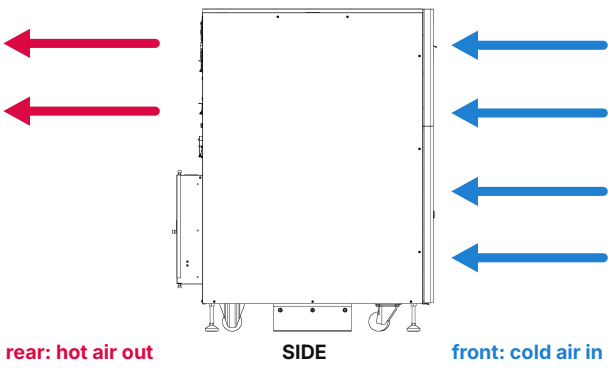

Space, floor and weights

Size, W × D × H	14.9 × 39.1 × 49.2 in · 378 × 993 × 1,250 mm; width at the base
Weight, frame	10 kVA: 231 lb 20 kVA: 258 lb 30 kVA: 282 lb
Weight with batteries	10 kVA: 465 lb · 699 lb 20 kVA: 609 lb · 726 lb 30 kVA: 750 lb
Clearance	11.8 in (300 mm) behind and on both sides; the front clear for service
Floor	level, under 5° slope; four M8 expansion bolts on concrete, four leveling feet; moved upright by forklift
Environment	23–104 °F (–5 to 40 °C) · 0–95 % RH · IP20 · below 6,562 ft (2,000 m)

14.9 in
wide at the base, 378 mm

39.1 in
deep, 993 mm

49.2 in
high, 1,250 mm

11.8 in
free behind and on both sides

Technical Specifications
AUREON 10–30 kVA

Model	10 kVA	20 kVA	30 kVA
Power (VA / W)	10,000 / 10,000	20,000 / 20,000	30,000 / 30,000
INPUT			
Connection	3 phases + N + PE		
Voltage, L-N	90–155 V at full load; 70–90 V with the output derated linearly		
Frequency	39.5–70.5 Hz		
Bypass	window 10, 15 or 20 % (20 % default); synchronizing 50/60 Hz ± 10 %		
Power factor · current distortion	≥ 0.99 · ≤ 3 % resistive, ≤ 5 % non-linear		
Current, max., input · bypass	37.0 · 30.3 A	75.9 · 60.6 A	100.0 · 90.9 A
BATTERY			
Type	VRLA, 12 V 9 Ah blocks, in modules inside the tower; external cabinets		
DC bus	±96 to ±120 V DC (±48 to ±60 cells, ±60 default)		
Blocks inside	40 · 80	60 · 80	80
Charge current · DC current, max.	1–10 A, 1 A default · 45.3 A	1–20 A, 2 A default · 91.6 A	1–20 A, 4 A default · 137.4 A
Backup at 50 % · 100 %	25 · 7 / 60 · 20 min	18 · 5 / 32 · 10 min	14 · 4 min
OUTPUT			
Connection · voltage	3 phases + N + PE · 120 V L-N (110 / 115 / 127 settable), 208 V L-L (190 / 200 / 220)		
Frequency	follows the bypass; 60 ± 0.1 Hz (or 50) on battery		
Distortion · power factor	≤ 1 % resistive, ≤ 4 % non-linear · 1 or 0.9, 1 by default		
Transfer to bypass	< 1 ms synchronized, < 10 ms not		
Overload, inverter	< 105 % continuous · 105–110 % 60 min · 110–130 % 10 min · 130–150 % 1 min · 150–200 % 200 ms		
Overload, bypass	< 130 % continuous · 130–155 % 1 min · > 155 % 200 ms		
Current, max.	30.3 A	60.6 A	90.9 A
Efficiency	up to 94 % · up to 98 % in ECO		
SYSTEM			
Display · communication	touchscreen, 5 lamps · RS485, dry contacts (5 out, 1 in, EPO), 2 slots: SNMP, relay or protocol card		
Parallel	up to 4 units, redundant or expand		
Environment	23–104 °F (–5 to 40 °C) · 0–95 % RH · IP20 · below 6,562 ft (2,000 m)		
Noise at 77 °F	< 60 dB		< 65 dB
W × D × H	14.9 × 39.1 × 49.2 in · 378 × 993 × 1,250 mm, width at the base; body 12.6 in (320 mm)		
Weight, frame without batteries	231 lb	258 lb	282 lb
Weight with batteries	465 lb · 699 lb	609 lb · 726 lb	750 lb
Standards	UL 1778 listed · performance IEC 62040-3		
Warranty	3 years on the UPS · 2 years on the VRLA batteries		

10–30 kVA
kVA = kW, output power factor 1

94 %
online efficiency; 98 % in ECO

UL 1778
listed UPS

3 years
warranty on the UPS

Ordering Information
AUREON 10–30 kVA

Every AUREON is ordered with one code: the rating, then the batteries inside. A frame without batteries takes external batteries.

AUR 20 -60X9A

series | rating, kVA | VRLA blocks × Ah

EXAMPLES

AUR-20
20 kVA frame, no batteries

AUR10-80X9A
10 kVA with 80 blocks inside

Code	Description
AUR-10	AUREON 10 kVA frame, no batteries
AUR10-40X9A	AUREON 10 kVA with 40 × 12 V 9 Ah · 7 min at full load
AUR10-80X9A	AUREON 10 kVA with 80 × 12 V 9 Ah · 20 min at full load
AUR-20	AUREON 20 kVA frame, no batteries
AUR20-60X9A	AUREON 20 kVA with 60 × 12 V 9 Ah · 5 min at full load
AUR20-80X9A	AUREON 20 kVA with 80 × 12 V 9 Ah · 10 min at full load
AUR-30	AUREON 30 kVA frame, no batteries
AUR30-80X9A	AUREON 30 kVA with 80 × 12 V 9 Ah · 4 min at full load
PAR-KIT-AUR	Parallel kit: up to four AUREON units
SNMP-L	SNMP-L network card: web pages, SNMP v1/v2c/v3 and Modbus TCP/IP; e-mail alarms; for LUMINA, ETHERNO, AUREON and INFINITE
DRYCNT	Dry-contact relay card: mains failure, battery low, UPS fault, bypass; all AEC UPS series

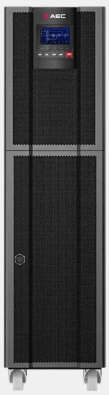

Closed



Door open: battery modules



Rear: breakers, wiring box

40–80 Blocks inside

12 V 9 Ah VRLA blocks in modules of 20, two to four per tower; external cabinets on the battery terminals for more.

10 kVA	40 or 80 blocks
20 kVA	60 or 80 blocks
30 kVA	80 blocks

ORDER

Sizing by AEC
Tell us the load and the runtime: AEC chooses the code, the battery set-up and the cables.

STOCK

Miami
AEC UPS USA keeps units, modules and spare parts in Miami.

WARRANTY

3 + 2 years
3 years on the UPS · 2 years on the VRLA batteries.