BATTERIES AND BATTERY CABINETS

Batteries and cabinets

A cabinet for every AEC UPS that takes external batteries: BAT towers and 19-inch packs for the FERRUS line, and the BB4US beside the FERRUS SP, each cabinet at the DC voltage of its UPS.



BB4US CABINET, A BAT TOWER AND A 19-INCH PACK

8
cabinets and packs for the FERRUS line

12 V 9 Ah
VRLA blocks, delivered charged

80
blocks in one BB4US cabinet

1–4
cabinets or packs per UPS

Battery Cabinet Selection
BAT, BAT…RT and BB4US

Eight cabinets and packs for the FERRUS line (11 catalog codes): every UPS rating and its cabinets; the DC voltage of the cabinet is the DC voltage of the UPS. Sizes, weights and pictures: the pages that follow.

Which goes with which

UPS	DC	BAT 0424	BAT 0848	BAT 1272	BAT 0424RT	BAT 0848RT	BAT 1272RT	BAT 16192RT	BB4US all	Per UPS
FERRUS 1 kVA	24 V	●								1–4
FERRUS 2 kVA	48 V		●							1–4
FERRUS 3 kVA	72 V			●						1–4
FERRUS RT 1 kVA	24 V				●					1–4
FERRUS RT 1.5 kVA	48 V					●				1–4
FERRUS RT 2 kVA	48 V					●				1–4
FERRUS RT 3 kVA	72 V						●			1–4
FERRUS SP 6 kVA	192 V								●	1
FERRUS SP 10 kVA	192 V								●	1
FERRUS SP 20 kVA	240 V								—	on request
FERRUS SP RT 6 kVA	192 V							●		1–4
FERRUS SP RT 10 kVA	192 V							●		1–4

● a catalog set: UPS and cabinet in one code (42 sets; ×2 to ×4 for more cabinets), backup time published

FERRUS SP 20 kVA: 40 blocks inside on 240 V DC (FERSP20000-40X9), or the same cabinet supplied empty (FERSP20000-EMPTY); external cabinet on request.

Battery inside: LUMINA (LiFePO4), ETHERNO (1 to 3 lithium modules of 50 Ah), AUREON (VRLA modules), RADIANT-IB and CIRRO-IB (up to 240 blocks on trays). **RADIANT and CIRRO:** an external battery bank, sized by AEC with each project. **INFINITE:** AEC L6 lithium cabinets, 480 V DC into its lithium window of 384–640 V (512 V rated); the L6 output voltages, p. 140.

BAT Tower Cabinets
FERRUS 1–3 kVA

Towers of the size of the FERRUS beside them: BAT0424 as the 1 kVA, BAT0848 (48 V DC) and BAT1272 (72 V DC) as the 2 and 3 kVA. 12 V 9 Ah blocks in two strings, delivered charged.

UPS AND CABINET · ONE SCALE



FERRUS 2 · 3 kVA
15.8 in

BAT0848 · BAT1272
15.8 in

The size of the UPS beside it. BAT0424 has the chassis of the FERRUS 1 kVA, 5.6 × 8.6 × 13.9 in; BAT0848 and BAT1272 the chassis of the 2 and 3 kVA, 7.5 × 12.6 × 15.8 in. Shown: the 2 · 3 kVA and its cabinet, to one scale.

	BAT0424	BAT0848	BAT1272
For	FERRUS 1 kVA	FERRUS 2 kVA	FERRUS 3 kVA
DC voltage	24 V	48 V	72 V
12 V 9 Ah blocks	4	8	12
Strings	2 × 2 blocks	2 × 4 blocks	2 × 6 blocks
W × D × H, in	5.6 × 8.6 × 13.9	7.5 × 12.6 × 15.8	7.5 × 12.6 × 15.8
W × D × H, mm	142 × 218 × 353	190 × 319 × 400	190 × 319 × 400
Weight, with blocks	31.4 lb	58.8 lb	86.2 lb

One to four per UPS, side by side, each on the external battery terminal of the FERRUS; the long-backup charger is set from 1 to 8 A on the UPS panel.

SET CODES

FER1000-2X9+BAT0424	FERRUS 1 kVA with one BAT0424; x2 to x4 for more
FER2000-4X9+BAT0848	FERRUS 2 kVA with one BAT0848; x2 to x4 for more
FER3000-6X9+BAT1272	FERRUS 3 kVA with one BAT1272; x2 to x4 for more

Backup time with one to four cabinets

The same published times for the 1, 2 and 3 kVA: every cabinet carries the blocks of its UPS. Times as published for each set.

UPS ALONE	+1 CABINET	+2 CABINETS	+3 CABINETS	+4 CABINETS
4.2 min at full load	**10** min at full load	**23.7** min at full load	**39.4** min at full load	**56.4** min at full load
10 min at half load	23.7 min at half load	56.4 min at half load	93.6 min at half load	134.2 min at half load

How the code reads

- **BAT**, a battery cabinet; **04**, **08**, **12**: its 12 V 9 Ah blocks
- **24**, **48**, **72**: its DC volts, the UPS's
- **RT** at the end: the 19-inch pack; none: the tower
- A set adds it to the UPS code: FER3000-6X9+BAT1272x2

UPS size	24–72 V	1–4	56.4 min
every tower the size of its UPS: 1 kVA, or 2 and 3 kVA	the UPS's DC voltage	cabinets per UPS	full load, four cabinets

19-inch Battery Packs
FERRUS RT and FERRUS SP RT

The width of the rack UPS they extend, 17.3 in: BAT…RT packs of 2U to 4U for the FERRUS RT, and the 3U BAT16192RT for the FERRUS SP RT, its 16 blocks in one string on the 192 V DC bus.



BAT0424RT, 2U, closed: the 19-inch front with handles



The same pack with its block tray drawn out



BAT16192RT, 3U: the pack of the FERRUS SP RT

	BAT0424RT	BAT0848RT	BAT1272RT	BAT16192RT
For	FERRUS RT 1 kVA	FERRUS RT 1.5 · 2 kVA	FERRUS RT 3 kVA	FERRUS SP RT 6 · 10 kVA
Rack height	2U	3U	4U	3U
DC voltage	24 V	48 V	72 V	192 V
12 V 9 Ah blocks	4	8	12	16
Strings	2 × 2 blocks	2 × 4 blocks	2 × 6 blocks	1 × 16 blocks
W × D × H, in	17.3 × 17.3 × 3.4	17.3 × 17.3 × 5.2	17.3 × 22.8 × 7	17.3 × 25 × 5.2
W × D × H, mm	439 × 439 × 86	439 × 439 × 132	439 × 579 × 178	439 × 635 × 132
Weight, with blocks	35.4 lb	64.8 lb	94.2 lb	123.6 lb
Per UPS	1–4	1–4	1–4	1–4

Full-load backup with one to four packs

UPS	+1 pack	+2 packs	+3 packs	+4 packs
FERRUS RT 1 · 2 · 3 kVA	10 min	23.7 min	39.4 min	56.4 min
FERRUS RT 1.5 kVA	14.3 min	34 min	56.4 min	80.8 min
FERRUS SP RT 6 kVA	6 min	14.3 min	23.7 min	34 min
FERRUS SP RT 10 kVA	3.2 min	7.5 min	12.5 min	17.9 min

In the rack

- The same 17.3 in width as the rack UPS, in the same 19-inch rack.
- Each pack connects to the external battery port of the UPS, at its DC voltage.
- FERRUS SP RT: one to four BAT16192RT on its 192 V DC bus.
- Battery capacity entered from the UPS panel.

How heavy, how deep

- BAT0424RT and BAT0848RT: 17.3 in deep, 35.4 and 64.8 lb.
- BAT1272RT: 22.8 in deep, 94.2 lb.
- BAT16192RT: 25 in deep, 123.6 lb.

17.3 in
19-inch width

2U–4U
BAT…RT packs

192 V
BAT16192RT, 16 blocks

1–4
packs per UPS

BB4US Battery Cabinet
FERRUS SP 6–10 kVA

A steel cabinet 9.84 in wide on four casters, delivered empty or with 32, 64 or 80 blocks of 12 V 9 Ah already wired in strings of 16 on the 192 V DC bus of the FERRUS SP.



The BB4US cabinet: ventilated steel front, blocks inside on shelves, on four casters. AEC photo.

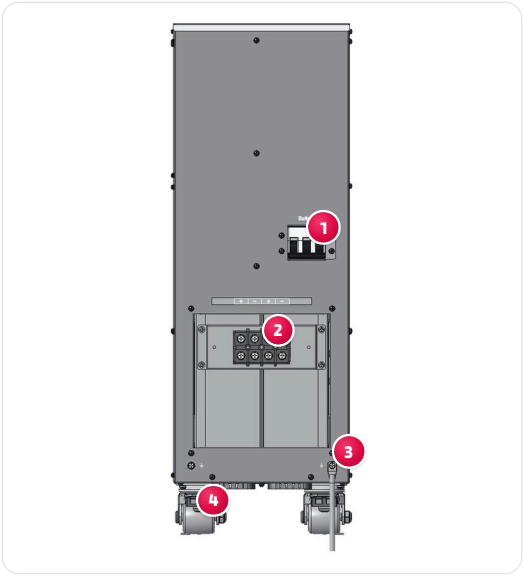

The rear

1. Battery MCB
2. DC terminal block, two strings (+ − + −)
3. Ground stud, one at each lower corner
4. Casters

Four ways to order it

Code	Blocks	Strings at 192 V	Weight	Set code
BB4US	empty: blocks to order	up to 5 strings of 16	110 lb	—
BB4US-32X9	32 × 12 V 9 Ah	2 strings of 16	297.2 lb	FERSP6000-16X9 or FERSP10000-16X9 +BB4US-32X9
BB4US-64X9	64 × 12 V 9 Ah	4 strings of 16	484.4 lb	FERSP6000-16X9 or FERSP10000-16X9 +BB4US-64X9
BB4US-80X9	80 × 12 V 9 Ah	5 strings of 16	578 lb	FERSP6000-16X9 or FERSP10000-16X9 +BB4US-80X9

Backup time, one cabinet and the 16 blocks inside the UPS

UPS	Cabinet	Blocks in all	25 % load	50 %	75 %	100 %
FERRUS SP 6 kVA	BB4US-32X9	48	107 min	56 min	31 min	24 min
FERRUS SP 6 kVA	BB4US-64X9	80	202 min	107 min	59 min	45 min
FERRUS SP 6 kVA	BB4US-80X9	96	254 min	135 min	74 min	57 min
FERRUS SP 10 kVA	BB4US-32X9	48	56 min	30 min	17 min	13 min
FERRUS SP 10 kVA	BB4US-64X9	80	107 min	57 min	32 min	24 min
FERRUS SP 10 kVA	BB4US-80X9	96	135 min	72 min	40 min	30 min

9.84 in
wide; 33.54 in deep, 28.54 in high

80
blocks, up to

MCB
battery breaker at the rear

578 lb
BB4US-80X9 with blocks