AEC
Technology Behind Power

BB6

Battery Cabinet · 800 × 800 × 1400 mm

User Manual

Installation, configurations, wiring diagrams and dimensional drawings

Rev. A · 2026-10-10

Foreword

Summary

Thank you for choosing the AEC BB6 battery cabinet.

This manual describes the BB6 battery cabinet and every battery configuration released by AEC for it: product data, safety, receiving and handling, installation, cabling, commissioning, maintenance and storage. The appendices contain the dimensional drawings made from the AEC mechanical CAD files and the AEC wiring diagrams of all configurations.

Read the whole manual before you start and keep it with the cabinet.

NOTE
The figures in this manual are for reference. Battery positions and cable routes in the diagrams are those used by AEC in the factory.

Symbol Conventions

Symbol	Description
DANGER	Alerts you to a high-risk hazard that, if not avoided, will result in death or serious injury.
WARNING	Alerts you to a medium or low-risk hazard that, if not avoided, could result in moderate or minor injury.
CAUTION	Alerts you to a potentially hazardous situation that, if not avoided, could result in equipment damage or performance deterioration.
NOTE	Provides additional information to emphasise or supplement important points in the main text.

Contents

1 Safety Description 1

1.1 Safety Announcements 1

1.2 Battery Announcements 1

1.3 Personal Protective Equipment 2

2 Receiving and Handling 3

2.1 Inspection on Receipt 3

2.2 Storage before Installation 3

2.3 Handling and Unpacking 3

2.4 Transport and Lifting 3

3 Product Description 4

3.1 Overview 4

3.2 Main Components (photo callouts) 4

3.3 Technical Data 5

3.4 Three-Pole System 5

3.5 Disconnect Q1 5

3.6 Cables and Kit 6

3.7 Fuse and Cable Selection 6

3.8 Electrical Ratings 7

3.9 Frame Variants 7

3.10 Options and Accessories 7

3.11 Conformity and Standards 8

4 Battery Configurations 9

4.1 Configuration Overview 9

4.2 How to Read the Diagrams 9

4.3 UPS Pairing (AEC Codes) 9

5 Installation 10

5.1 Site Requirements 10

5.2 Positioning and Floor Fixing 10

5.3 Earthing (PE) 10

5.4 Checking the Batteries 10

5.5 Installing the Batteries 10

5.6 Wiring Procedure 11

5.7 Connection to the UPS 11

5.8 Room Ventilation (EN IEC 62485-2) 11

5.9 Floor Loading and Heat Dissipation 12

5.10 Battery Temperature Sensor 12

5.11 Several Cabinets in Parallel 12

6 Commissioning 13

6.1 Voltage Measurements 13

6.2 Before Closing Q1 13

7 Maintenance and Storage 14

7.1 Periodic Checks 14

7.2 Battery Replacement 14

7.3 Storage 14

7.4 Spare Parts 15

8 Troubleshooting 16

9 Warranty, Disposal and Contacts 16

9.1 Warranty 16

9.2 Disposal 16

9.3 Contacts 16

Appendices 17

Appendix A — General Arrangement and Dimensional Drawings 17

Appendix B — AEC Wiring Diagrams 17

Appendix C — Commissioning Record 17

Appendix D — Battery Log Sheet 17

1 Safety Description

1.1 Safety Announcements

DANGER

The cabinet contains a DC battery string of up to ±240 VDC (480 VDC between + and –). Battery voltage is always present and cannot be switched off at the batteries. Contact with live parts causes electric shock, burns and death.

CAUTION

Only qualified electricians who have read this manual may install, wire or maintain the cabinet. Work by unauthorised persons voids the warranty.

- Keep disconnect Q1 OFF during the whole installation and during any work inside the cabinet.
- Use insulated tools only. Remove rings, watches and other metal objects.
- Wear insulating gloves (EN 60903, class 0 or higher), safety glasses and protective footwear.
- Never place tools or metal parts on top of the batteries.
- Never short-circuit a battery or the string. Short-circuit currents can exceed several thousand amperes.
- Connect the main cables in the order N, then –, then + last. Disconnect in the reverse order.
- Work in a dry, ventilated area. VRLA batteries can release hydrogen if overcharged or damaged: no open flames or sparks.
- Do not open, crush or burn batteries. Damaged batteries can leak corrosive electrolyte.
- Two people are needed to move batteries; each one weighs 8 to 35 kg.

1.2 Battery Announcements

CAUTION

Use only the battery model, capacity and quantity specified for your configuration. A non-specified battery can damage the UPS.

WARNING

For safety, one link in the middle of the string and the jumpers between shelves may be removed before shipment. Reconnect them as shown in the wiring diagram, last of all, before closing Q1.

If electrolyte touches the skin or eyes, rinse with plenty of clean water for at least 15 minutes and get medical help.

1.3 Personal Protective Equipment

Equipment	Standard
Insulating gloves	EN 60903, class 0 or higher
Safety glasses or face shield	EN 166
Protective footwear	EN ISO 20345
Insulated tools	IEC 60900 (1000 V)
Multimeter	CAT III 1000 V or better

2 Receiving and Handling

2.1 Inspection on Receipt

- Inspect the delivery in the presence of the carrier: count the packages against the delivery note and check for visible damage (crushed corners, tilt indicators, punctures).
- Write any damage on the delivery note before signing, take photographs and send a damage report to the carrier and to AEC within 24 hours.
- Unpack within 7 days and check for concealed damage. Report concealed damage to the carrier and to AEC with photographs.
- Do not install a damaged cabinet or damaged batteries. Contact AEC for a return authorisation (RMA) before returning any goods.

2.2 Storage before Installation

Store the cabinet indoors, dry and upright. Store batteries at 0 to 25 °C and recharge them every 6 months, or when the open-circuit voltage falls below 12.6 V per battery. Note the charge date written on the battery packaging.

2.3 Handling and Unpacking

- Remove the front door(s) or front panel and the side panels before loading batteries; keep the screws.
- Two people are needed to handle each battery. Lift batteries by the case, never by the terminals.

⚠ WARNING

The cabinet is heavy. Use lifting equipment rated for the weight and never tilt the cabinet more than 10°.

2.4 Transport and Lifting

- Move the cabinet only empty: never lift or move it with the batteries installed.
- Use a forklift or pallet truck. Insert the forks under the cabinet between the feet (clearance under the frame: see the dimensional drawing, Appendix A), with forks at least as long as the cabinet depth.
- Keep the cabinet upright. The centre of gravity of the empty cabinet is in the middle of the footprint; do not tilt it more than 10°.
- Do not lift by the doors, the panels or the roof. Remove the packaging only at the final position.
- For lifting by crane use a spreader and slings under the base; do not use the roof as a lifting point.

3 Product Description

3.1 Overview

The BB6 is a floor-standing steel battery cabinet for AEC UPS systems. It holds a series string of 12 V VRLA batteries; the string is split into two equal halves and the midpoint is the neutral (N). The cabinet supplies the UPS through a 3-pole DC disconnect with three conductors: positive (+), neutral (N) and negative (–).



Fig. 1 Closed



Fig. 2 Open, without batteries



Fig. 3 With batteries installed (example)

The photos show example configurations. The number, size and position of the batteries depend on the configuration ordered (chapter 4).

3.2 Main Components (photo callouts)

No.	Component	Description	Fig.
1	Front door	Hinged steel door with lock, RAL 9005, with the AEC logo.	1
2	Q1 operating handle	Door-mounted rotary handle of the disconnect Q1: O = OFF (open), I = ON (closed).	1
3	Side panels	Screwed steel side panels. Remove them for access during installation if required; keep the screws.	1
4	Feet	Steel feet. Fix the cabinet to the floor through the feet (see 5.2).	1
5	Disconnect Q1	3-pole DC fuse switch-disconnector (+, N, –) on a galvanised mounting plate in the top compartment, with DC fuses F1 (+) and F2 (–). Fuse rating per UPS model (see 3.7).	2, 3
6	Cable compartment	Free space beside Q1 for routing the +, N, – and PE cables to the UPS.	2
7	Battery shelves	Steel battery shelves. The number of levels depends on the frame variant (see 3.9).	2
8	Uprights	Galvanised uprights with holes for the shelf positions.	2

No.	Component	Description	Fig.
9	Batteries	12 V VRLA AGM batteries, placed and connected as in the wiring diagram of the configuration (Appendix B).	3
–	Terminal block X1	Output to the UPS: L+, M (N), L– and PE.	–
–	PE bonding point	Earth connection of the frame. Connect it to the UPS earth / building earth.	–
–	Cable entry	Top: gland plate 100 × 100 mm in the roof (see Appendix A); bottom: through the open base	–

3.3 Technical Data

Dimensions (W × D × H)	800 × 800 × 1400 mm (31.5 × 31.5 × 55.1 in)
Weight, empty	140 kg (309 lb)
Shelves	3 battery shelves + shelf 4 (disconnect Q1; also holds batteries in the 38 and 40 configurations)
Battery type	12 V 60 Ah VRLA AGM (40 Ah and 80 Ah layouts available)
Configurations (batteries)	30, 32, 34, 36, 38, 40
DC fuses (F1, F2)	50 / 63 / 100 / 125 / 160 / 250 A (max 250 A)
Main cables	per UPS power, see 3.7
Cable entry	Top: gland plate 100 × 100 mm in the roof (see Appendix A); bottom: through the open base
Colour / protection	RAL 9005 · IP20 (IP21–IP44 optional)
Typical UPS	IST7 10–120 kVA — see 4.3
Internal frame	745 × 765 mm (frame) · uprights 50 mm · shelves 40 mm
Floor fixing	through the feet with floor anchors; hole positions from AEC on request

3.4 Three-Pole System

The batteries are connected in series. The neutral (N) is connected between battery n/2 and battery n/2+1, so that each half of the string supplies the same voltage. With n batteries of 12 V, each half supplies 6 × n volts: positive relative to N on the + side, negative relative to N on the – side. Example with 40 batteries: + to N = 240 V, N to – = 240 V, + to – = 480 V.

3.5 Disconnect Q1

Q1 is a 3-pole DC switch-disconnector on the top shelf. The positive (+) and negative (–) poles have fuses F1 and F2; the neutral pole is switched but not fused. With Q1 OFF the UPS terminals are isolated from the batteries; the batteries and the cables up to Q1 remain live.

The position of Q1, fuses F1/F2, terminals X1 and the PE point is shown in the general arrangement drawing DOC-BB6-GA-001 (Appendix A, detail A).

3.6 Cables and Kit

Cable	Function
+ (red)	Main cable, Q1 + to the last battery (+)
– (black)	Main cable, Q1 – to Battery 1 (–)
N (blue)	Main cable, Q1 N to the midpoint
J1...J3	Long jumpers between shelves (dashed in the diagrams)
Short links	Battery-to-battery links, supplied with the batteries

Internal cable kit per configuration

Quantities counted from the AEC wiring diagram of each configuration. Main cables and long jumpers are supplied with the cabinet when ordered “with internal cables”; short links are supplied with the batteries. The cables from X1 to the UPS are supplied only when ordered “with external cables”.

Config.	+ (red)	– (black)	N (blue)	Long jumpers	Short links	Total
30 · 15N15	1	1	1	2	27	32
32 · 16N16	1	1	1	2	29	34
34 · 17N17	1	1	1	2	31	36
36 · 18N18	1	1	1	2	33	38
38 · 19N19	1	1	1	3	34	40
40 · 20N20	1	1	1	3	36	42

3.7 Fuse and Cable Selection

Fuses F1 (+) and F2 (–) are selected by the UPS power, according to the AEC code of the cabinet (BB6-10k … BB6-120k). Use only DC-rated fuses with a rated voltage not lower than the maximum charge voltage of the string (see 3.8).

UPS max. power	AEC code	Fuse F1/F2	Fuse size	Cu cable min.	PE min.
10 kW	BB6-10k	50 A	NH00	10 mm²	10 mm²
20 kW	BB6-20k	63 A	NH00	16 mm²	16 mm²
40 kW	BB6-40k	100 A	NH00	25 mm²	16 mm²
60 kW	BB6-60k	125 A	NH00	35 mm²	16 mm²
80 kW	BB6-80k	160 A	NH00	70 mm²	35 mm²
100 kW	BB6-100k	250 A	NH1	120 mm²	60 mm²
120 kW	BB6-120k	250 A	NH1	120 mm²	60 mm²

Minimum copper cross-section for the cables X1 → UPS: single-core cable, 70 °C PVC insulation, laid in air (IEC 60364-5-52, method C), current rating not lower than the fuse rating. Apply the derating factors of the site (ambient temperature, grouping, length/voltage drop ≤ 0.5 %). For 400 A, 2 × 120 mm² in parallel per pole is an alternative to 240 mm². PE per IEC 60364-5-54. Fuse size = standard NH size for the rating.

3.8 Electrical Ratings

Item	Value
Nominal string voltage	12 V × number of batteries (see 4.1); 3-pole: ±6 V × batteries per string
Float voltage	13.5 – 13.7 V per battery at 20 – 25 °C (2.25 – 2.28 V/cell)
Maximum charge voltage	14.4 V per battery (2.40 V/cell)
Maximum continuous current	Rating of F1/F2: up to 250 A
Fuses F1/F2	DC-rated, rated voltage ≥ maximum charge voltage; breaking capacity ≥ prospective short-circuit current of the battery string (battery data sheet)
Disconnect Q1	3-pole DC switch-disconnector, fuse holders on + and –
Earthing	PE bonding point on the frame; one PE conductor per cabinet
Standards	IEC/EN 62040-1 (UPS safety) · EN IEC 62485-2 (battery installations) · CE

3.9 Frame Variants

The internal frame is supplied with 2 to 4 shelf levels. The clear height of each level suits a battery size; AEC chooses the frame for the configuration ordered. Clear heights are taken from the AEC mechanical drawings (Appendix A).

Levels	Clear height per level, top to bottom (mm)	Drawing
2	593 / 592	DOC-BB6-MD-002
3	374 / 382 / 389	DOC-BB6-MD-003
4	277 / 276 / 276 / 276	DOC-BB6-MD-004

3.10 Options and Accessories

Option	Description
Protection degree	IP20 standard; IP21 to IP44 on request.
Materials	Painted steel RAL 9005 standard; aluminium alloy or stainless steel versions on request.
Forced ventilation	Automatic fans, IP68, 12 V or 24 V DC supply.
Protection devices	Fuse holders or 2-pole / 3-pole DC disconnectors up to 1000 A.
Q1 auxiliary contacts	Optional auxiliary contacts on Q1 for remote signalling of the disconnect status to the UPS or BMS.
2-pole version	Positive / negative output (no neutral) for 2-pole UPS battery inputs.
Internal cables	Main cables and long jumpers fitted to the configuration (code option “with internal cables”).
External cables	Cables from X1 to the UPS (code option “with external cables”).
Custom layouts	Other battery models, capacities and numbers on request.

3.11 Conformity and Standards

Marking	CE
Product standard	IEC/EN 62040-1 — UPS safety requirements (battery cabinets for UPS)
Battery installation	EN IEC 62485-2 — safety requirements for stationary batteries (ventilation, protection, labelling)
Wiring	IEC 60364 series and local regulations
Declaration of conformity	Available from AEC on request, quoting the cabinet code and serial number.
USA / Canada	Install to NEC (NFPA 70) Articles 480 and 706 or CEC; apply shock and arc-flash labels per NFPA 70E. Check the nameplate for product listings.

4 Battery Configurations

4.1 Configuration Overview

The table lists every configuration released by AEC for the BB6. Each configuration has a two-sheet AEC wiring diagram (installation layout and electrical schematic) checked for continuity, polarity, neutral position and cable routing. For configurations not listed, contact AEC.

Batteries	Layout	Battery	Poles	+ to N / N to –	+ to –	Document	Page
30	15N15	60 Ah	3	180 / 180 V	360 V	DOC-BB6-WD-030	23
32	16N16	60 Ah	3	192 / 192 V	384 V	DOC-BB6-WD-032	25
34	17N17	60 Ah	3	204 / 204 V	408 V	DOC-BB6-WD-034	27
36	18N18	60 Ah	3	216 / 216 V	432 V	DOC-BB6-WD-036	29
38	19N19	60 Ah	3	228 / 228 V	456 V	DOC-BB6-WD-038	31
40	20N20	60 Ah	3	240 / 240 V	480 V	DOC-BB6-WD-040	33

* Approximate weight with batteries (16.5 kg per battery). Check that the floor can carry it.

4.2 How to Read the Diagrams

- Battery 1 is always the negative end of the string. Batteries are numbered along the string.
- Red = positive cable (+), black = negative cable (–), blue = neutral (N), grey = short battery links, dashed = jumpers between shelves.
- In ×2 configurations the two strings are identical and connected in parallel at Q1. Measure each string separately.
- 2-pole configurations have no neutral: only + and – are connected to Q1.

4.3 UPS Pairing (AEC Codes)

Configurations of the BB6 supplied by AEC with its UPS, from the AEC code list (UPS code = model-kVA-batteries×Ah). The total weight includes cabinet and batteries.

Batteries	Total weight	UPS models
30 × 60 Ah	660 kg	IST7 10 · 20 · 30 · 40 · 60 · 80 · 100 · 120 kVA
32 × 60 Ah	695 kg	IST7 10 · 20 · 30 · 40 · 60 · 80 · 100 · 120 kVA
34 × 60 Ah	730 kg	IST7 10 · 20 · 30 · 40 · 60 · 80 · 100 · 120 kVA
36 × 60 Ah	760 kg	IST7 10 · 20 · 30 · 40 · 60 · 80 · 100 · 120 kVA

5 Installation

5.1 Site Requirements

- Indoor, dry, clean room, protected from direct sunlight and water. Never install the cabinet in a sealed enclosure: batteries can release hydrogen.
- Ambient temperature 20 to 25 °C for best battery life (0 to 40 °C allowed). Battery life halves for approximately every 10 °C above 25 °C.
- Level floor able to carry the full weight of the cabinet with batteries (see 5.9).
- At least 600 mm free in front of the cabinet for installation and maintenance; keep the ventilation slots free (minimum 100 mm behind and at the sides with ventilation).
- Keep the cable route to the UPS as short as possible.

5.2 Positioning and Floor Fixing

1. Place the empty cabinet in its final position and level it.
2. Fix the cabinet to the floor with anchors suitable for the floor (hole positions from AEC on request).
3. Remove the front door(s) or front panel and the side panels for access. Check that Q1 is OFF.

5.3 Earthing (PE)

Connect the PE bonding point of the cabinet to the UPS earth terminal or to the building earth with a green/yellow conductor sized according to IEC 60364-5-54 and local regulations (main cables up to 16 mm²: same cross-section; 25–35 mm²: 16 mm²; above 35 mm²: half the cross-section — see the table in 3.7). Each cabinet must have its own earth conductor.

5.4 Checking the Batteries

- Check every battery for damage, leaks or deformed cases. Do not install damaged batteries.
- Measure the open-circuit voltage of every battery: 12.6 V or higher: ready; 12.0 to 12.6 V: recharge before installation; below 10.5 V: do not install, contact AEC.
- Check that all batteries are the same model, capacity and production batch.

5.5 Installing the Batteries

- Load the bottom shelf first and work upwards to keep the cabinet stable.
- Place every battery in the position shown in the diagram of your configuration, terminals oriented exactly as drawn.
- Leave the terminals uncovered until all links are fitted, then fit the terminal covers.

5.6 Wiring Procedure

DANGER

Keep disconnect Q1 OFF during the whole installation and during any work inside the cabinet.

1 Set Q1 to OFF. Keep it OFF until commissioning (chapter 6).

2 Open the wiring diagram of your configuration (Appendix B, sheet 1). Place every battery in the position shown, with the terminals oriented exactly as drawn. Load the bottom shelf first to keep the cabinet stable.

3 Fit the short links between the batteries as shown. Tighten every terminal bolt to the torque specified by the battery manufacturer. Fit terminal covers where supplied.

4 Fit the long jumpers J1…J3 between the shelves along the route shown (dashed lines).

5 Before you connect the main cables, measure each half of the string: from Battery 1 (–) to Battery n/2 (+), and from Battery n/2+1 (–) to the last battery (+). Each reading must be approximately 6 × n volts, where n is the number of batteries (see the table in chapter 6).

6 Connect the neutral cable N (blue) from Q1 to the midpoint shown in the diagram.

7 Connect the negative cable (black) from Q1 to Battery 1 (–).

8 Connect the positive cable (red) from Q1 to the last battery (+). This is always the last connection.

9 With Q1 still OFF, measure at the Q1 battery-side terminals: + to N, N to –, + to – (chapter 6).

5.7 Connection to the UPS

1 Switch the UPS off and isolate its battery input before connecting the cabinet.

2 Connect X1 to the UPS: L+ to BAT+, M to N, L– to BAT–, PE to the UPS earth. Check the polarity at both ends.

3 Size the cables for the UPS battery current and a maximum voltage drop of 0.5 % of the battery voltage; follow the UPS manual and local regulations.

4 Close Q1 only during UPS commissioning, following the UPS manual.

5.8 Room Ventilation (EN IEC 62485-2)

VRLA batteries release small amounts of hydrogen, mainly during boost/equalising charge. The room must provide at least the air flow Q below (natural or forced ventilation). $Q = 0.05 \times n \times I_{gas} \times C_{rt} \times 10^{-3}$ m³/h, with n = number of cells, I_{gas} = 1 mA/Ah (float) or 8 mA/Ah (boost), C_{rt} = capacity in Ah. For natural ventilation, free inlet and outlet openings of at least A = 28 × Q cm² each.

Config.	Cells	Capacity	Q float	Q boost	Openings A
30 · 15N15	180	60 Ah	0.54 m³/h	4.3 m³/h	121 cm²
32 · 16N16	192	60 Ah	0.58 m³/h	4.6 m³/h	129 cm²
34 · 17N17	204	60 Ah	0.61 m³/h	4.9 m³/h	137 cm²

Config.	Cells	Capacity	Q float	Q boost	Openings A
36 · 18N18	216	60 Ah	0.65 m³/h	5.2 m³/h	145 cm²
38 · 19N19	228	60 Ah	0.68 m³/h	5.5 m³/h	153 cm²
40 · 20N20	240	60 Ah	0.72 m³/h	5.8 m³/h	161 cm²

Values per cabinet at the highest capacity of each configuration. For several cabinets in the same room, add the flows.

5.9 Floor Loading and Heat Dissipation

Floor load = total weight / footprint (800 × 800 mm). Check the floor rating with the building engineer before installation. Heat dissipation on float is calculated with a float current of 1 mA/Ah at 13.65 V per battery; it rises during recharge.

Batteries	Total weight	Floor load	Load per foot	Heat on float
30 × 60 Ah	660 kg	1031 kg/m²	165 kg	25 W
32 × 60 Ah	695 kg	1086 kg/m²	174 kg	26 W
34 × 60 Ah	730 kg	1141 kg/m²	182 kg	28 W
36 × 60 Ah	760 kg	1188 kg/m²	190 kg	29 W

5.10 Battery Temperature Sensor

- If the UPS supports temperature-compensated charging, fit the UPS battery temperature probe inside the cabinet.
- Fix the probe on the side of a battery at mid-height of the battery stack, away from the door, the ventilation slots and the main cables.
- Route the probe cable separately from the DC power cables and connect it to the UPS input stated in the UPS manual.
- Set the compensation coefficient on the UPS as specified by the battery manufacturer.

5.11 Several Cabinets in Parallel

- Use the same battery model, capacity, number of batteries per string and manufacturing batch in all cabinets connected to one UPS.
- Each cabinet keeps its own disconnect Q1 and fuses F1/F2.
- Use cables of the same cross-section and the same length from each cabinet to the UPS (or to a common DC busbar), so that the strings share the current equally.
- Connect + to +, N to N and – to –. Check the voltage of each cabinet separately (chapter 6) before connecting them together.
- The maximum number of parallel strings and the total capacity are set by the UPS: see the UPS manual. Set the battery capacity on the UPS to the total of all cabinets.
- Earth every cabinet with its own PE conductor.

6 Commissioning

6.1 Voltage Measurements

Measure with a CAT III multimeter, Q1 OFF, at the battery side of Q1. Put the black probe (COM) on the first terminal named and the red probe on the second. All readings must be positive. Nominal values use 12 V per battery; the float range uses 13.5 to 13.7 V per battery (batteries on charge).

Batteries per string	COM on N, red on +	COM on −, red on N	COM on −, red on +	Float range, each half
30	+180 V	+180 V	+360 V	202 – 206 V
32	+192 V	+192 V	+384 V	216 – 219 V
34	+204 V	+204 V	+408 V	230 – 233 V
36	+216 V	+216 V	+432 V	243 – 247 V
38	+228 V	+228 V	+456 V	256 – 260 V
40	+240 V	+240 V	+480 V	270 – 274 V

NOTE
For ×2 configurations, measure each string separately before connecting it to Q1. For 2-pole configurations, measure + to − only.

6.2 Before Closing Q1

- All three readings match the table for your configuration.
- The two halves differ by less than 1 %.
- No reading is negative: a negative value means the polarity of a cable is reversed. Stop and correct it before closing Q1.
- All terminal bolts are tightened; no tools or loose parts in the cabinet.
- The UPS is ready to receive the batteries (see the UPS manual). Then close Q1.

7 Maintenance and Storage

7.1 Periodic Checks

Interval	Check
Every month	Visual check: no swollen cases, leaks, corrosion or overheating; ventilation openings free; room temperature.
Every 6 months	Measure the voltage of every battery on float. Note the values. A battery more than 0.3 V away from the average needs checking.
Every 12 months	With Q1 OFF and the UPS on bypass or off, check the tightness of all terminal bolts. Clean dust with a dry cloth.
Every 3 to 5 years	Battery capacity test or replacement, according to the battery manufacturer and the operating temperature.

7.2 Battery Replacement

1. Prepare the new battery: same model and capacity; open-circuit voltage 12.6 V or higher.
2. Switch Q1 OFF and make sure the UPS is not drawing power from the batteries.
3. Remove the jumper(s) between shelves to reduce the voltage in the work area.
4. Disconnect the battery to be replaced: + first, then −.
5. Fit the new battery with the terminals oriented as in the diagram. Reconnect − first, then +. Tighten to the torque on the battery label.
6. Refit the jumpers. Measure + to N, N to − and + to − at Q1 before closing it.

7.3 Storage

Store batteries in a dry place at 0 to 25 °C. Recharge stored batteries at least every 6 months, or when the voltage falls below 12.6 V. A deeply discharged battery (below 10.5 V) can be permanently damaged.

7.4 Spare Parts

Order spare parts from AEC service quoting the cabinet code and serial number from the nameplate.

Part	Specification	Qty
Fuse F1/F2	DC-rated, rating per cabinet code (see 3.7), NH size per rating	2
Disconnect Q1	3-pole DC switch-disconnector with fuse holders	1
Battery	12 V VRLA AGM, same model, capacity and supplier as installed	per configuration
Short links	Battery-to-battery links with screws and washers	per configuration
Long jumpers	Jumpers between shelves (J1…), with lugs	per configuration
Main cables	+ (red), – (black), N (blue), with lugs	per configuration (see 3.6)
Terminal covers	Insulating covers for battery terminals	per battery
Door lock and key	Front door lock	1
Gland plate	Cable entry plate	1

8 Troubleshooting

Problem	Possible cause	Action
No voltage at the UPS	Q1 OFF; fuse F1 or F2 blown; loose cable	Check Q1 and the fuses; check every connection with Q1 OFF.
Wrong voltage + to N or N to –	Neutral at the wrong position; link missing or wrong	Compare with the diagram: N must be between battery n/2 and n/2+1.
Negative reading	Cable connected with reversed polarity	Q1 OFF; correct the connection before closing Q1.
One battery much lower than the others	Faulty battery	Replace the battery with the same model.
Warm terminal or link	Loose bolt or corroded contact	Q1 OFF; clean and tighten to the specified torque.
Short backup time	Old batteries; high room temperature	Capacity test; replace the string if needed.
Fuse blows again	Short circuit or wrong fuse rating	Do not replace the fuse again: contact AEC service.

9 Warranty, Disposal and Contacts

9.1 Warranty

The BB6 cabinet is covered by a 3-year warranty from the date of purchase, according to the AEC conditions of sale. Batteries are covered by the warranty of the battery manufacturer. The warranty does not cover damage caused by installation not following this manual, wrong polarity, unsuitable environment, or batteries not approved by AEC.

9.2 Disposal

Batteries contain lead and acid. Do not dispose of them with household waste. Return them to an authorised collection point according to Directive 2006/66/EC and local regulations. The cabinet (steel) can be recycled.

9.3 Contacts

Technical support	service@aecups.com
Phone	+39 393 080 5211
Web	www.aecups.com
Head office	AEC International Srl, Via Nerviano 55, 20045 Lainate (MI), Italy

Have the cabinet serial number, the configuration and the diagram code (e.g. DOC-BB6-WD-040) ready when you contact AEC.

Appendices

Appendix A — General Arrangement and Dimensional Drawings

General arrangement (front view, side section and Q1 compartment detail) and dimensional drawings, rendered from the AEC mechanical CAD files (DXF, 1:1, mm). The DXF files are available from AEC on request.

Document	Title	Page
DOC-BB6-GA-001	General arrangement · IP20	18
DOC-BB6-MD-001	800 × 800 × 1400 mm · external dimensions	19
DOC-BB6-MD-002	Internal frame · 2 levels	20
DOC-BB6-MD-003	Internal frame · 3 levels	21
DOC-BB6-MD-004	Internal frame · 4 levels	22

Appendix B — AEC Wiring Diagrams

Two sheets per configuration. Sheet 1: installation layout (front view, battery positions, links, jumpers and main cables). Sheet 2: electrical schematic to IEC 60617.

Document	Title	Page
DOC-BB6-WD-030	30 × 12 V · 15N15	23
DOC-BB6-WD-032	32 × 12 V · 16N16	25
DOC-BB6-WD-034	34 × 12 V · 17N17	27
DOC-BB6-WD-036	36 × 12 V · 18N18	29
DOC-BB6-WD-038	38 × 12 V · 19N19	31
DOC-BB6-WD-040	40 × 12 V · 20N20	33

Appendix C — Commissioning Record

Forms to copy and fill in. Keep them with the cabinet documentation; AEC service may ask for them for warranty claims.

Document	Title	Page
DOC-BB6-CR	Commissioning Record	35

Appendix D — Battery Log Sheet

Document	Title	Page
DOC-BB6-BL	Battery Log Sheet	36

BB6 BATTERY CABINET

GENERAL ARRANGEMENT — 800 × 800 × 1400 mm · IP20

FRONT VIEW — door closed

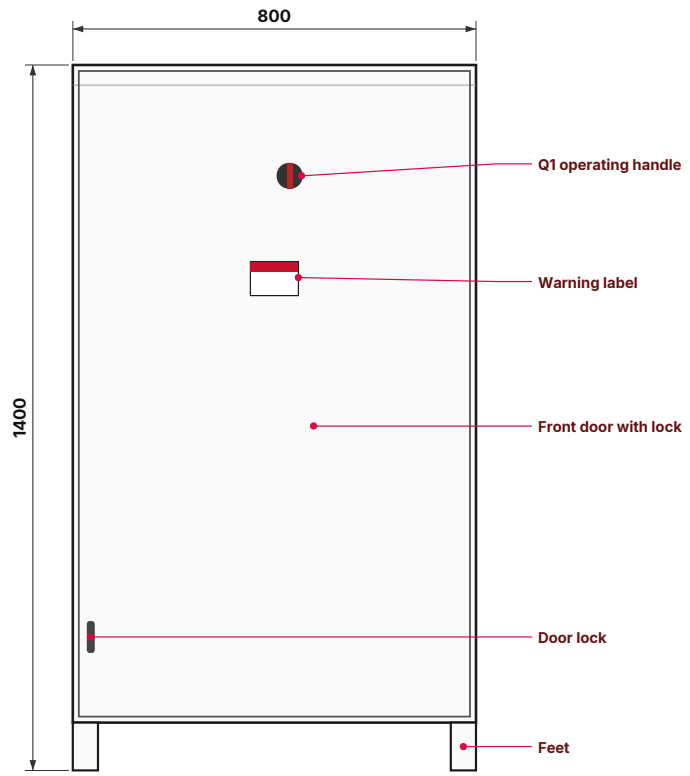

SIDE SECTION — side panel removed

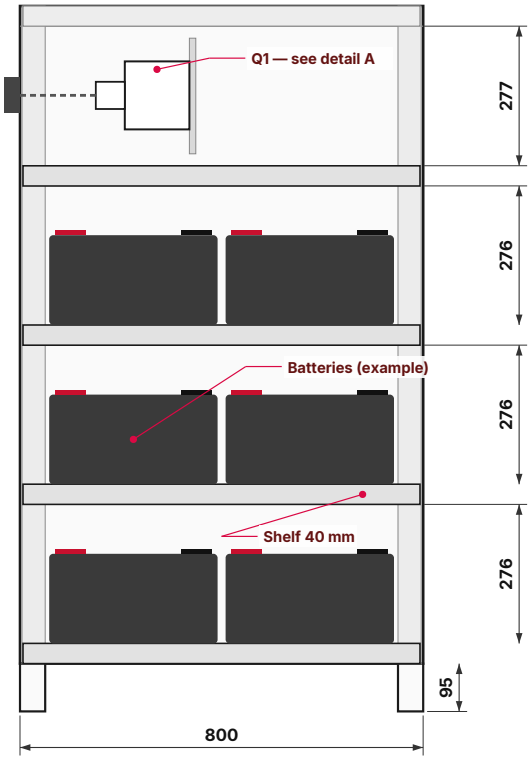

DETAIL A — Q1 compartment, door open

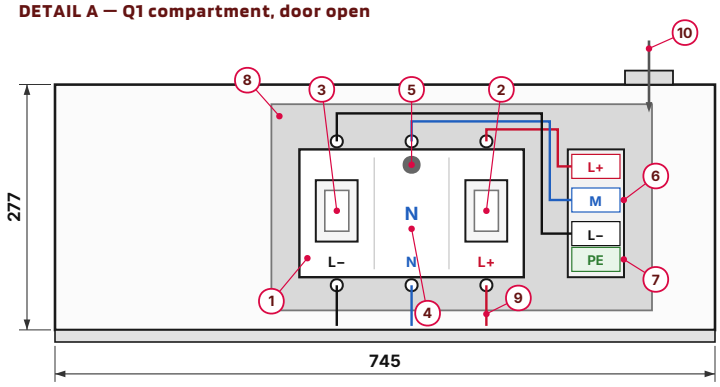

DETAIL A — ITEMS

1. Q1 3-pole DC switch-disconnector
2. F1 fuse (+)
3. F2 fuse (–)
4. N pole (switched, not fused)
5. Handle shaft to door
6. X1 terminals to UPS: L+ · M · L–
7. PE bonding point
8. Galvanised mounting plate
9. Main cables to the string
10. Cable entry: gland plate 100 × 100 (top)

NOTES

1. All dimensions in mm. Do not scale the drawing; use the dimensions.
2. IP20: ventilation slots in side panels and top cover. RAL 9005.
3. Shelf layout shown: 4 levels (other frame variants: see dimensional drawings). Batteries shown as an example.
4. Q1 rating and fuses F1/F2 per UPS model (see 3.7). Detail A shows the arrangement; component positions are indicative.
5. Geometry from AEC mechanical drawing MOB 800X800X1400 / PANNELLI · 4 piani.

AEC International Srl Lainate (MI) — Italia	**BB6 — GENERAL ARRANGEMENT** 800 × 800 × 1400 mm · IP20 Document: DOC-BB6-GA-001 · Rev.: A · Date: 2026-10-10 Scale: 1:15 (A4) · Sheet: 1/1

AEC Technology Behind Power

BB6 BATTERY CABINET

DIMENSIONAL DRAWING — 800 × 800 × 1400 mm · external dimensions

FRONT VIEW

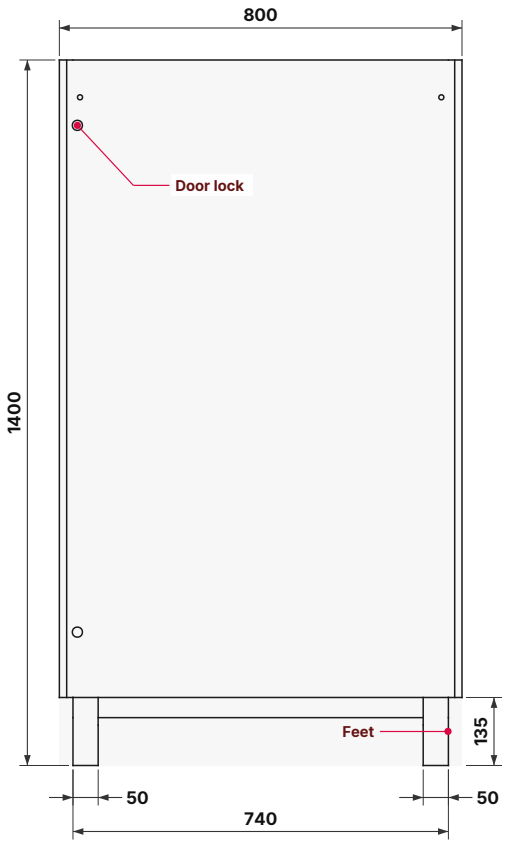

SIDE VIEW

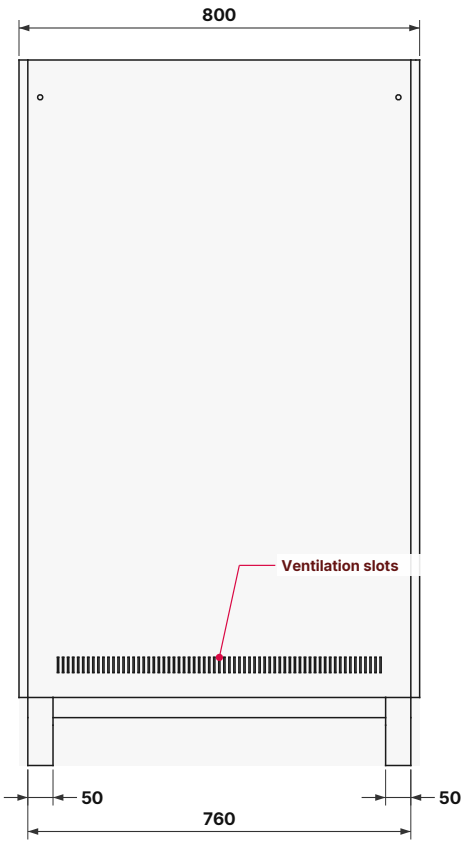

TOP VIEW

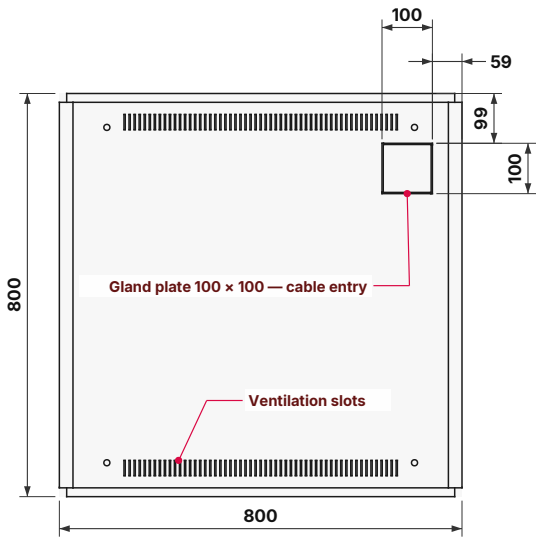

▲ FRONT

NOTES

1. All dimensions in mm. Do not scale the drawing; use the dimensions.
2. Colour RAL 9005 · IP20 (IP21–IP44 optional).
3. Doors with lock; side panels screwed. Ventilation slots in side panels and top cover.
4. Floor fixing through the feet; hole positions from AEC on request.
5. Drawn from AEC mechanical drawing MOB 800X800X1400 PANNELLI.dxf.

AEC International Srl Lainate (MI) — Italia	**BB6 — DIMENSIONAL DRAWING** 800 × 800 × 1400 mm · external dimensions Document: DOC-BB6-MD-001 · Rev.: A · Date: 2026-10-10 Scale: 1:15 (A4) · Sheet: 1/1

BB6 BATTERY CABINET

DIMENSIONAL DRAWING — Internal frame · 2 levels

FRONT VIEW — frame, panels removed

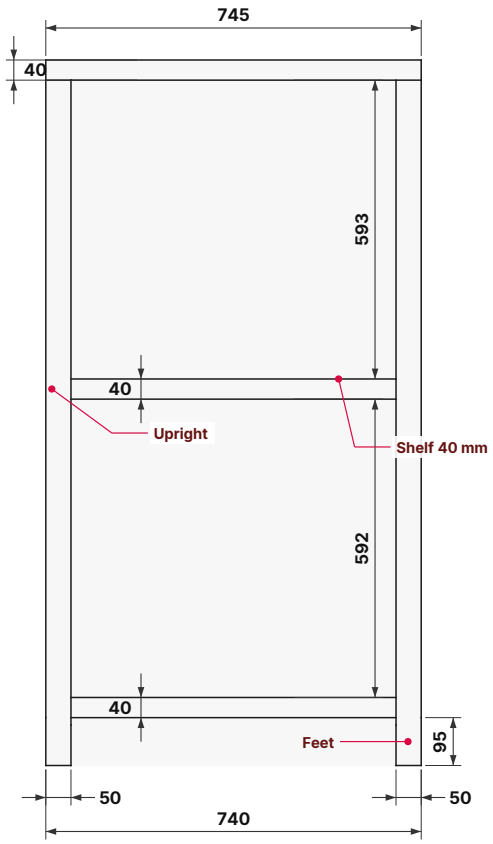

SIDE VIEW — frame, panels removed

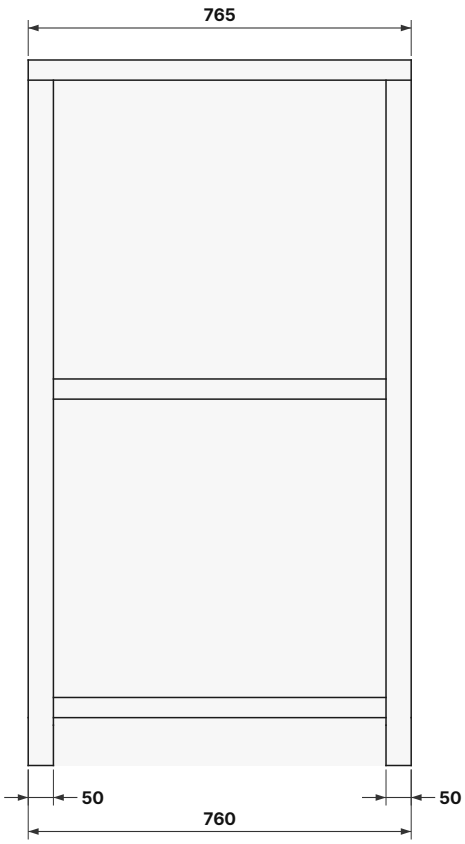

TOP VIEW

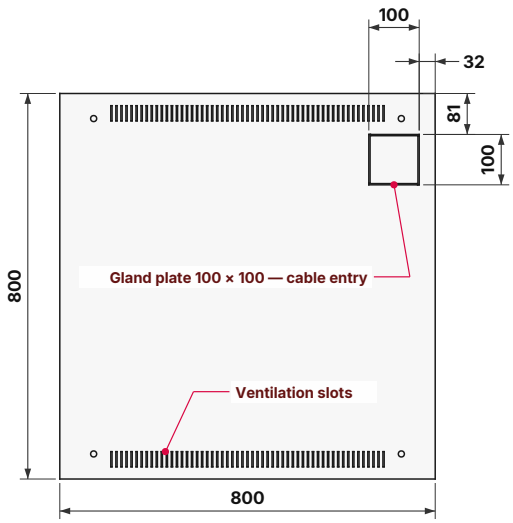

▲ FRONT

NOTES

1. All dimensions in mm. Do not scale the drawing; use the dimensions.
2. Colour RAL 9005 · IP20 (IP21–IP44 optional).
3. Frame shown without panels. Clear height between shelves as dimensioned.
4. Drawn from AEC mechanical drawing MOB 800X800X1400 2 piani.dxf.

AEC International Srl Lainate (MI) — Italia	**BB6 — DIMENSIONAL DRAWING** Internal frame · 2 levels Document: DOC-BB6-MD-002 · Rev.: A · Date: 2026-10-10 Scale: 1:15 (A4) · Sheet: 1/1

AEC Technology Behind Power

BB6 BATTERY CABINET

DIMENSIONAL DRAWING — Internal frame · 3 levels

FRONT VIEW — frame, panels removed

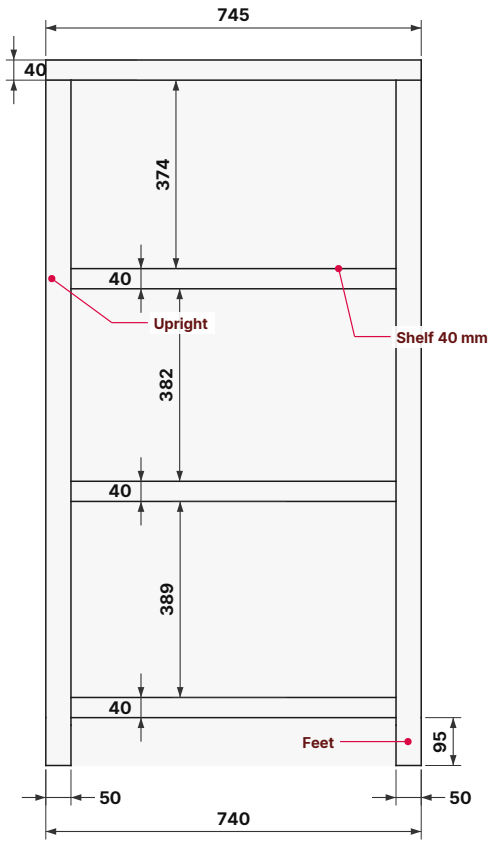

SIDE VIEW — frame, panels removed

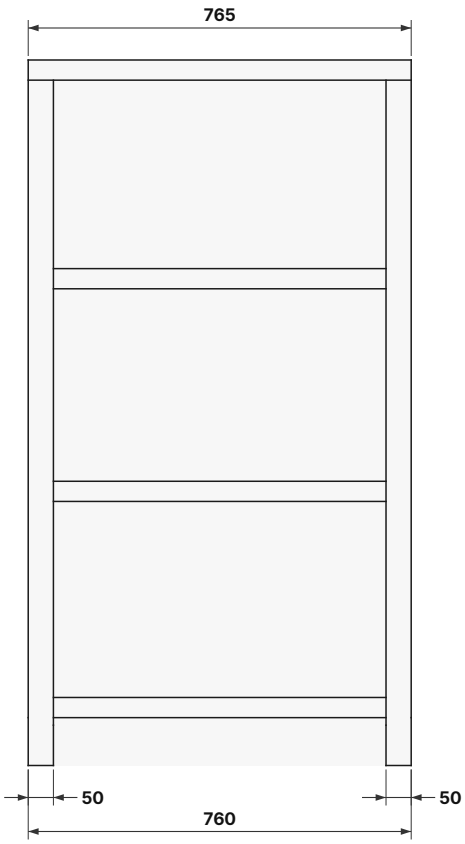

TOP VIEW

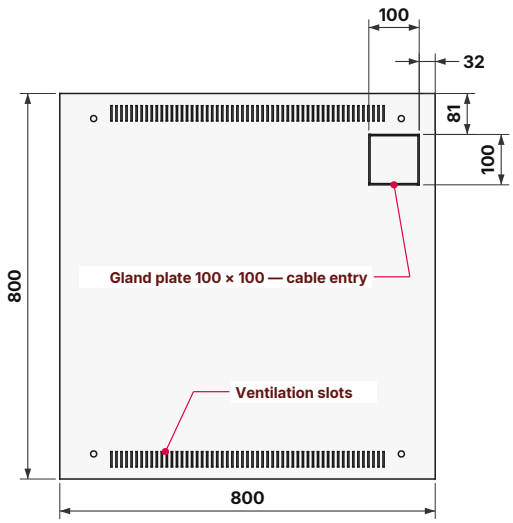

▲ FRONT

NOTES

1. All dimensions in mm. Do not scale the drawing; use the dimensions.
2. Colour RAL 9005 · IP20 (IP21–IP44 optional).
3. Frame shown without panels. Clear height between shelves as dimensioned.
4. Drawn from AEC mechanical drawing MOB 800X800X1400 3 piani.dxf.

AEC Technology Behind Power

AEC International Srl
Lainate (MI) — Italia

BB6 — DIMENSIONAL DRAWING
Internal frame · 3 levels

Document	Rev.	Date
DOC-BB6-MD-003	A	2026-10-10

Scale	Sheet
1:15 (A4)	1/1

AEC Technology Behind Power

BB6 BATTERY CABINET

DIMENSIONAL DRAWING — Internal frame · 4 levels

FRONT VIEW — frame, panels removed

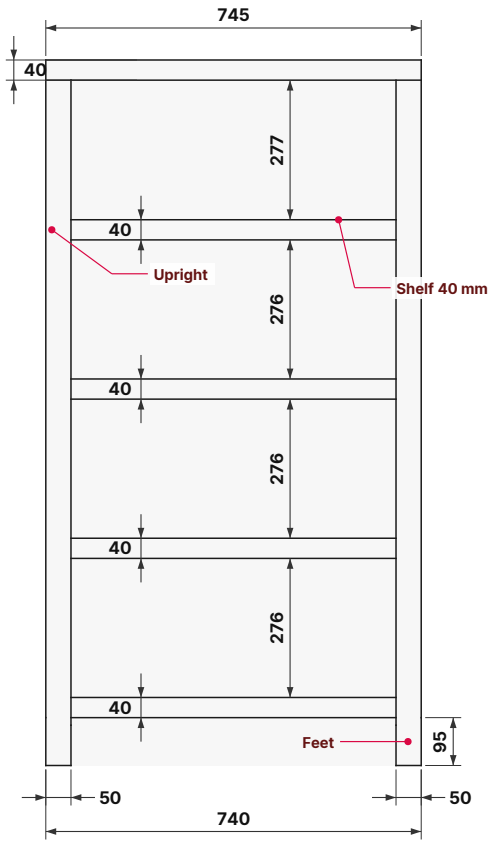

SIDE VIEW — frame, panels removed

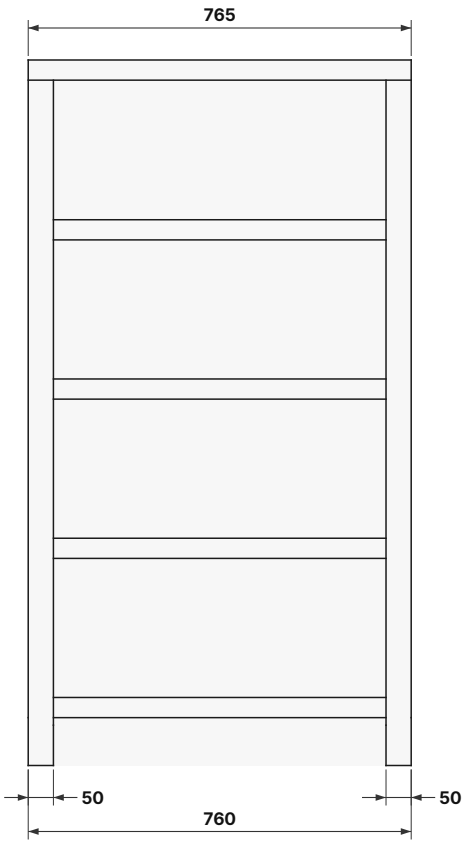

TOP VIEW

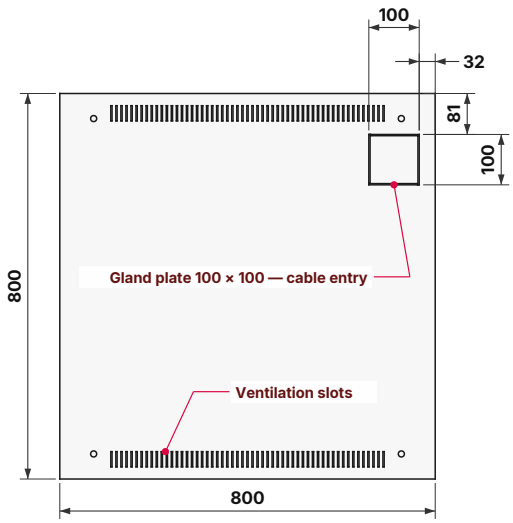

▲ FRONT

NOTES

1. All dimensions in mm. Do not scale the drawing; use the dimensions.
2. Colour RAL 9005 · IP20 (IP21–IP44 optional).
3. Frame shown without panels. Clear height between shelves as dimensioned.
4. Drawn from AEC mechanical drawing MOB 800X800X1400 4 piani.dxf.

AEC International Srl Lainate (MI) — Italia	**BB6 — DIMENSIONAL DRAWING** Internal frame · 4 levels		
	Document **DOC-BB6-MD-004**	Rev. **A**	Date **2026-10-10**
	Scale **1:15 (A4)**	Sheet **1/1**	

AEC Technology Behind Power

BB6 BATTERY CABINET

Installation wiring diagram — sheet 1/2

30 × 12 V 60 Ah · 15 + N + 15 · ±180 VDC

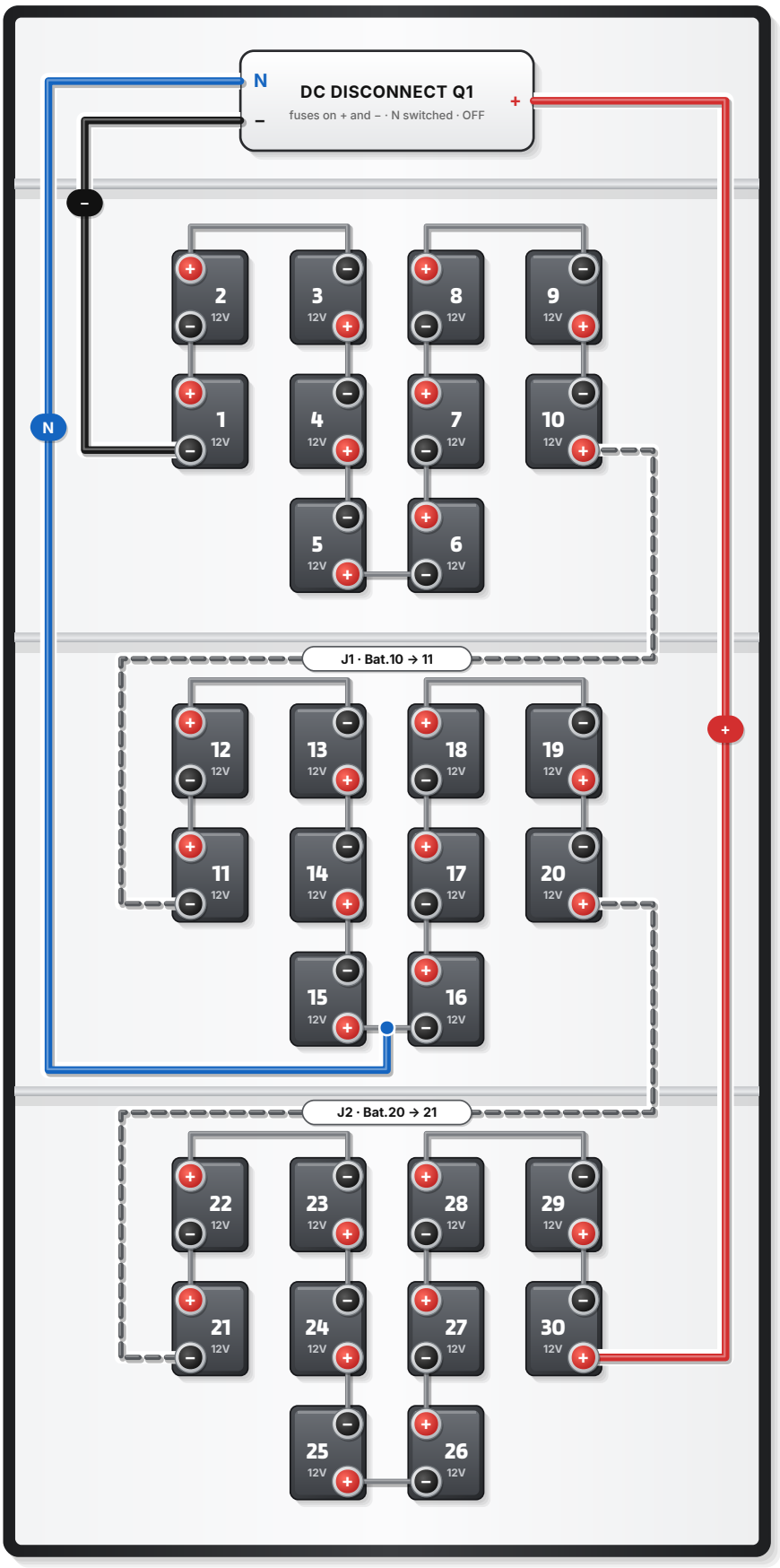

CONFIGURATION

Batteries	**30 × 12 V 60 Ah**
Strings	**15 + N + 15**
+ to N	**180 VDC**
N to –	**180 VDC**
+ to –	**360 VDC**

Nominal values (12 V per battery).

LEGEND

- Positive terminal (+)
- Negative terminal (–)
- Main cable + (red)
- Main cable – (black)
- Neutral N (blue)
- Battery link (short)
- Jumper (long)
- Cable passes over (no contact)

CABLES

- + — Q1 + → Bat.30 +
- – — Q1 – → Bat.1 –
- N — Q1 N → Bat.15 + / Bat.16 –
- J1 — Bat.10 + → Bat.11 –
- J2 — Bat.20 + → Bat.21 –

+ 27 short links (supplied with batteries)

WIRING ORDER

1. Q1 OFF for the whole job.
2. Place batteries exactly as shown, terminals oriented as drawn.
3. Fit the 27 short links.
4. Fit the jumpers J1, J2.
5. Connect N, then –, then + last.
6. Check voltages (table above) before closing Q1.

⚠ DANGER — up to 360 VDC

Qualified electricians only.
Insulated tools and PPE.

Electrical schematic: sheet 2/2.

Front view, doors and side panels removed. Battery 1 = negative end. Battery positions and connections as built by AEC production.

BATTERY STRING

–G1 … –G30 · 30 × 12 V VRLA · series, midpoint M

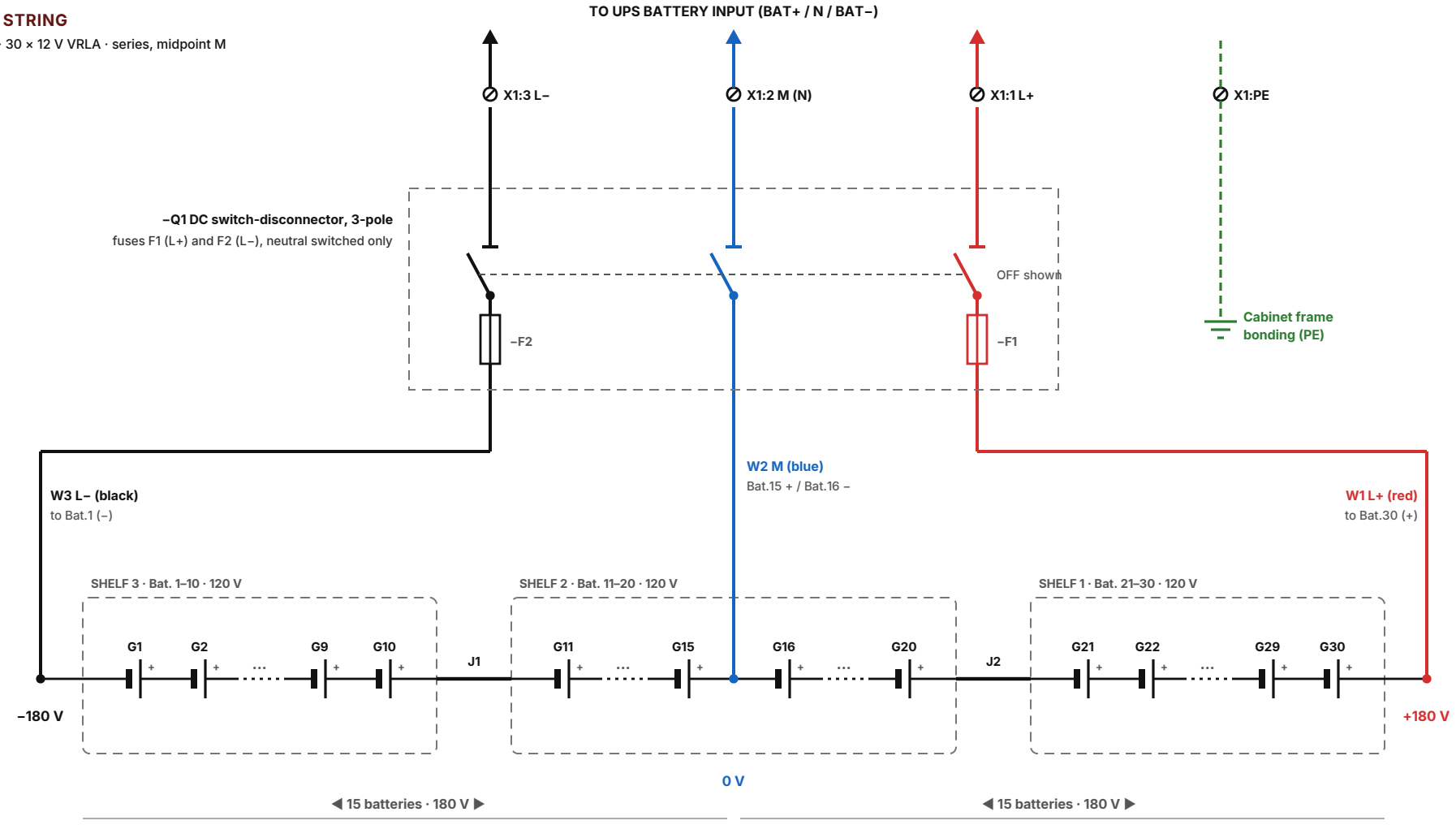

NOTES

1. Symbols to IEC 60617. Conductor names to IEC 60445: L+ positive, L– negative, M midpoint (neutral).
2. –G1…–G30 = Bat.1…Bat.30 on sheet 1. Bat.1 is the negative end. J = long jumper.
3. Voltages are nominal (12 V per battery). Float voltage per battery manufacturer data.
4. Fuses F1 (L+) and F2 (L–) only; M is switched, not fused. Fuse rating and cable size per UPS model.
5. Q1 OFF during installation. Verify 180 V (L+ to M), 180 V (M to L–), 360 V (L+ to L–) before closing Q1.

Battery positions and connections as built by AEC production.

AEC Technology Behind Power

AEC International Srl
Lainate (MI) — Italia

BB6 — ELECTRICAL SCHEMATIC
30 × 12 V 60 Ah · 15 + N + 15 · 360 VDC

Document	Sheet
DOC-BB6-WD-030	2 / 2

Rev.	Date	Scale
A	2026-10-10	NTS

AEC Technology Behind Power

BB6 BATTERY CABINET

Installation wiring diagram — sheet 1/2

32 × 12 V 60 Ah · 16 + N + 16 · ±192 VDC

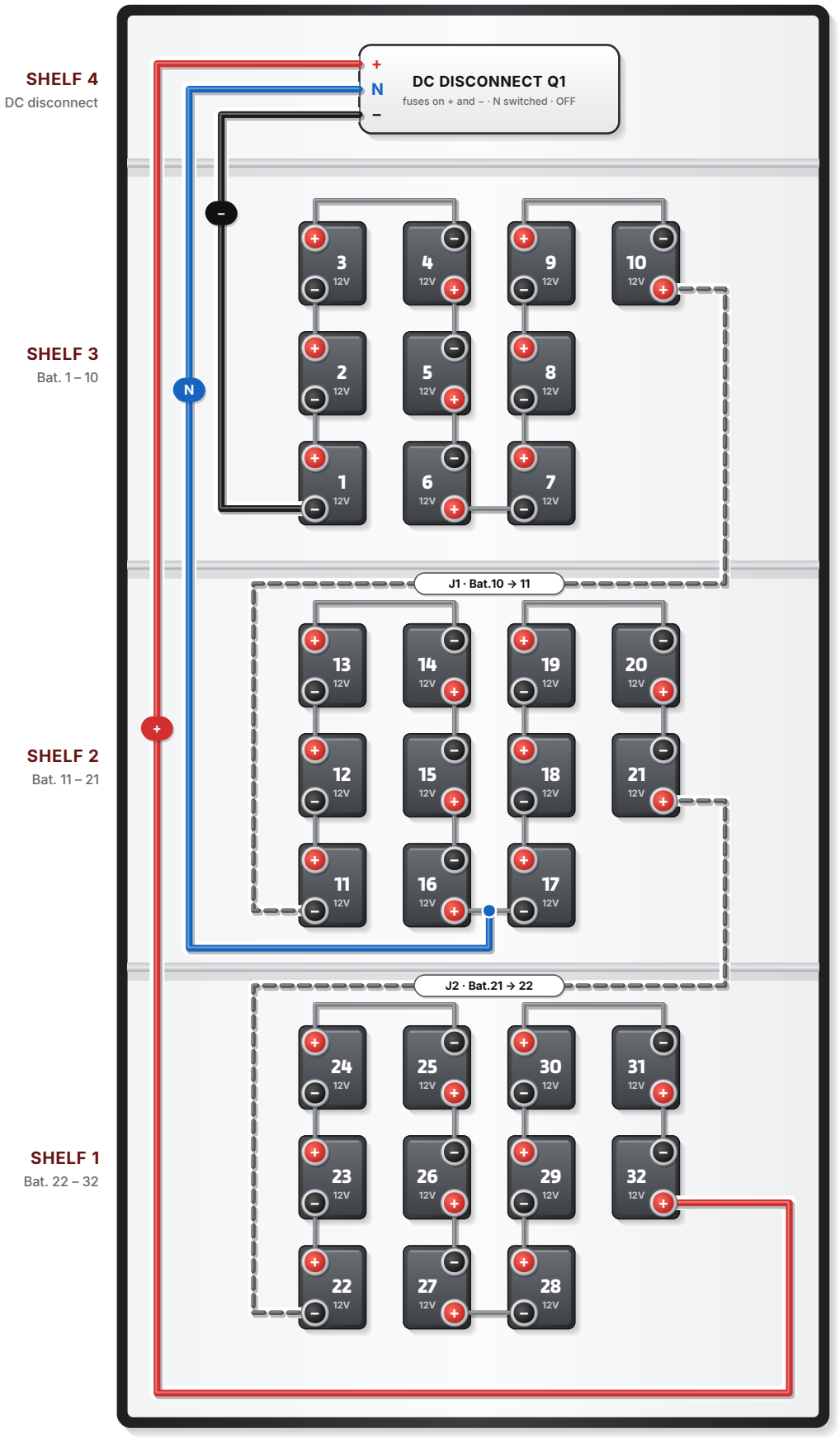

CONFIGURATION

Batteries	**32 × 12 V 60 Ah**
Strings	**16 + N + 16**
+ to N	**192 VDC**
N to –	**192 VDC**
+ to –	**384 VDC**

Nominal values (12 V per battery).

LEGEND

- Positive terminal (+)
- Negative terminal (–)
- Main cable + (red)
- Main cable – (black)
- Neutral N (blue)
- Battery link (short)
- Jumper (long)
- Cable passes over (no contact)

CABLES

- + — Q1 + → Bat.32 +
- – — Q1 – → Bat.1 –
- N — Q1 N → Bat.16 + / Bat.17 –
- J1 — Bat.10 + → Bat.11 –
- J2 — Bat.21 + → Bat.22 –

+ 29 short links (supplied with batteries)

WIRING ORDER

1. Q1 OFF for the whole job.
2. Place batteries exactly as shown, terminals oriented as drawn.
3. Fit the 29 short links.
4. Fit the jumpers J1, J2.
5. Connect N, then –, then + last.
6. Check voltages (table above) before closing Q1.

⚠ DANGER — up to 384 VDC
Qualified electricians only.
Insulated tools and PPE.

Electrical schematic: sheet 2/2.

BATTERY STRING

–G1 … –G32 · 32 × 12 V VRLA · series, midpoint M

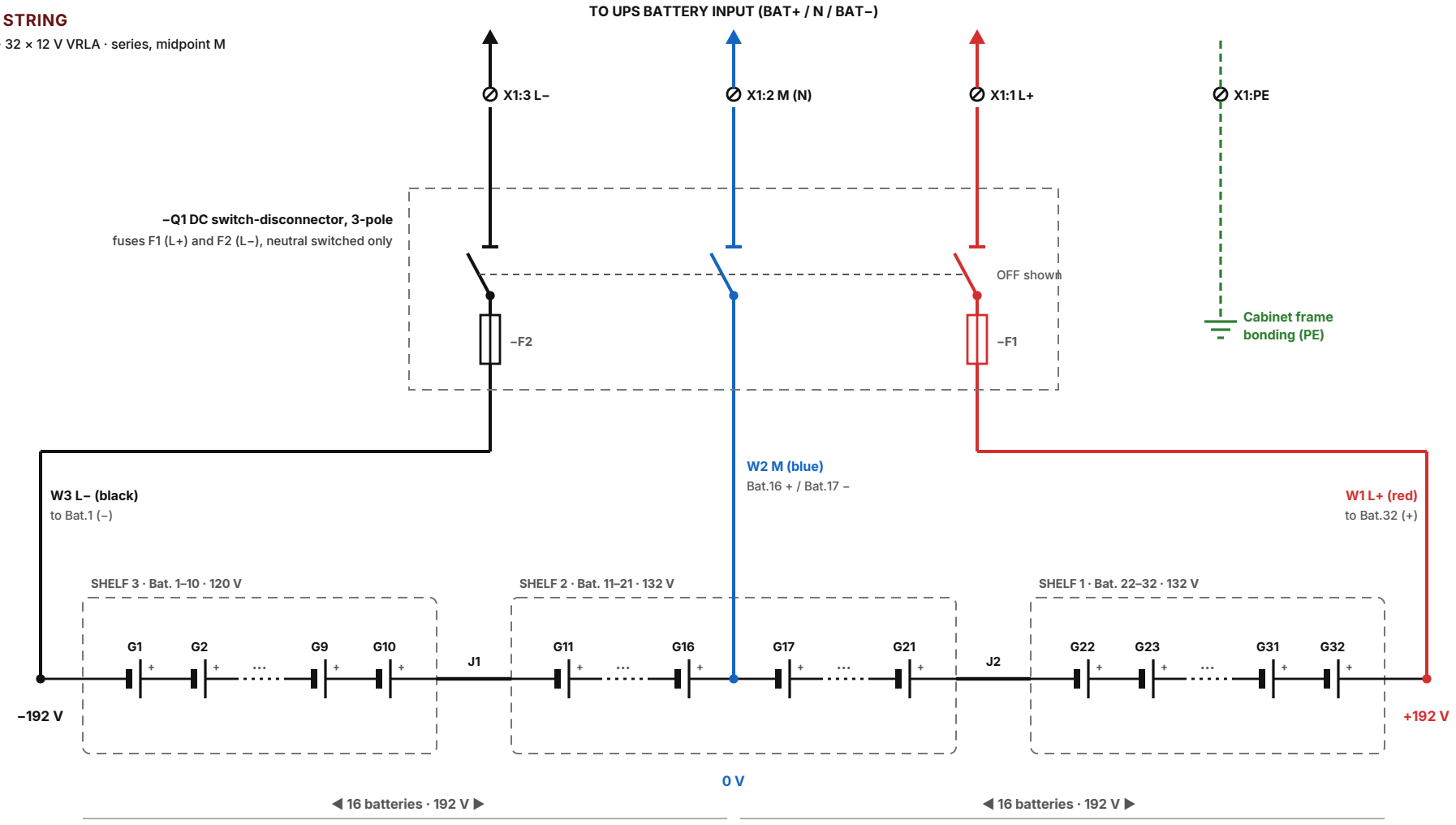

NOTES

1. Symbols to IEC 60617. Conductor names to IEC 60445: L+ positive, L– negative, M midpoint (neutral).
2. –G1…–G32 = Bat.1…Bat.32 on sheet 1. Bat.1 is the negative end. J = long jumper.
3. Voltages are nominal (12 V per battery). Float voltage per battery manufacturer data.
4. Fuses F1 (L+) and F2 (L–) only; M is switched, not fused. Fuse rating and cable size per UPS model.
5. Q1 OFF during installation. Verify 192 V (L+ to M), 192 V (M to L–), 384 V (L+ to L–) before closing Q1.

Battery positions and connections as built by AEC production.

AEC Technology Behind Power

AEC International Srl
Lainate (MI) — Italia

BB6 — ELECTRICAL SCHEMATIC
32 × 12 V 60 Ah · 16 + N + 16 · 384 VDC

Document	Sheet
DOC-BB6-WD-032	2 / 2

Rev.	Date	Scale
A	2026-10-10	NTS

AEC Technology Behind Power

BB6 BATTERY CABINET

Installation wiring diagram — sheet 1/2

34 × 12 V 60 Ah · 17 + N + 17 · ±204 VDC

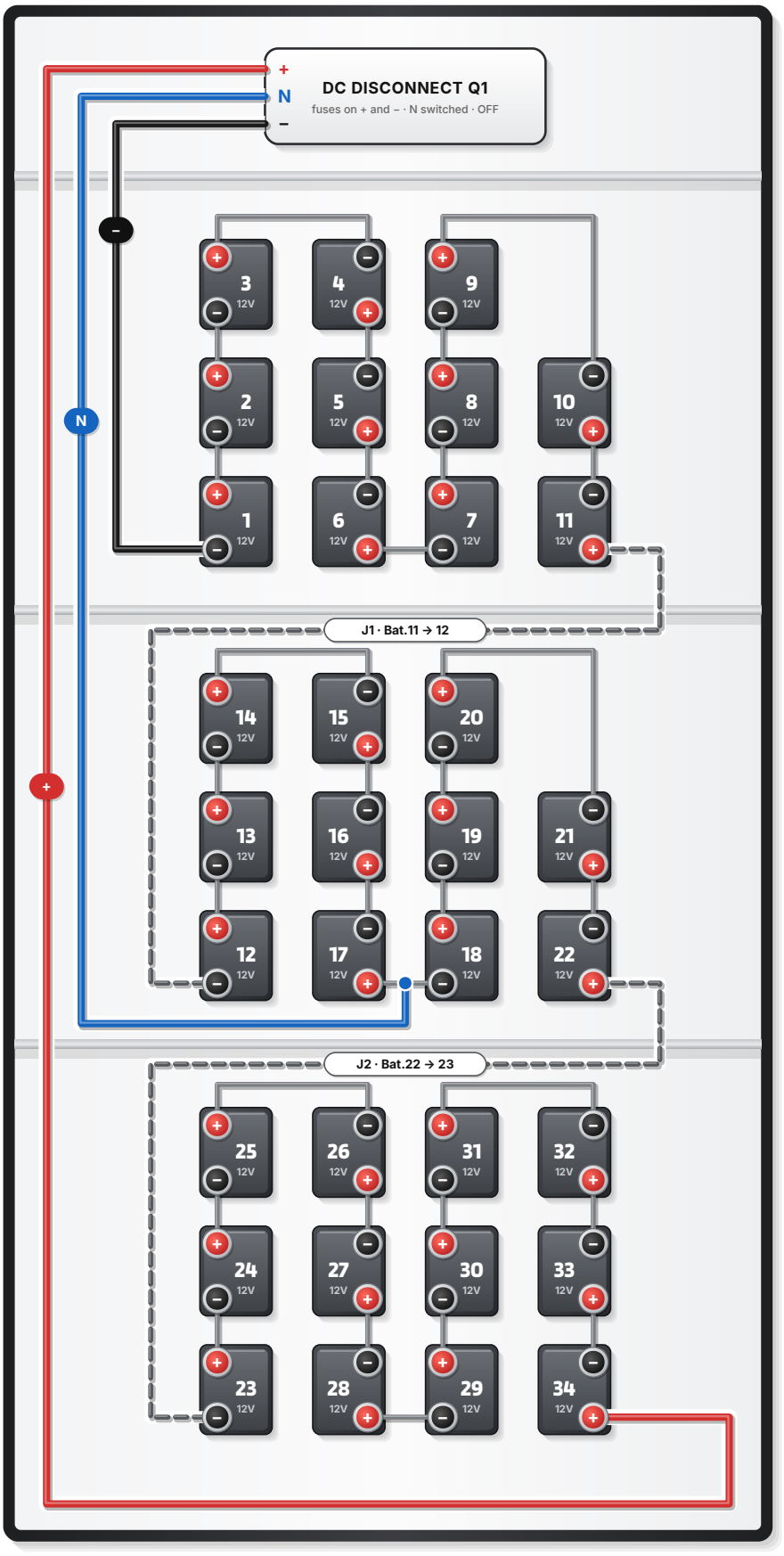

CONFIGURATION

Batteries	**34 × 12 V 60 Ah**
Strings	**17 + N + 17**
+ to N	**204 VDC**
N to –	**204 VDC**
+ to –	**408 VDC**

Nominal values (12 V per battery).

LEGEND

- Positive terminal (+)
- Negative terminal (–)
- Main cable + (red)
- Main cable – (black)
- Neutral N (blue)
- Battery link (short)
- Jumper (long)
- Cable passes over (no contact)

CABLES

- + — Q1 + → Bat.34 +
- – — Q1 – → Bat.1 –
- N — Q1 N → Bat.17 + / Bat.18 –
- J1 — Bat.11 + → Bat.12 –
- J2 — Bat.22 + → Bat.23 –

+ 31 short links (supplied with batteries)

WIRING ORDER

1. Q1 OFF for the whole job.
2. Place batteries exactly as shown, terminals oriented as drawn.
3. Fit the 31 short links.
4. Fit the jumpers J1, J2.
5. Connect N, then –, then + last.
6. Check voltages (table above) before closing Q1.

⚠ DANGER — up to 408 VDC
Qualified electricians only.
Insulated tools and PPE.

Electrical schematic: sheet 2/2.

BATTERY STRING

–G1 … –G34 · 34 × 12 V VRLA · series, midpoint M

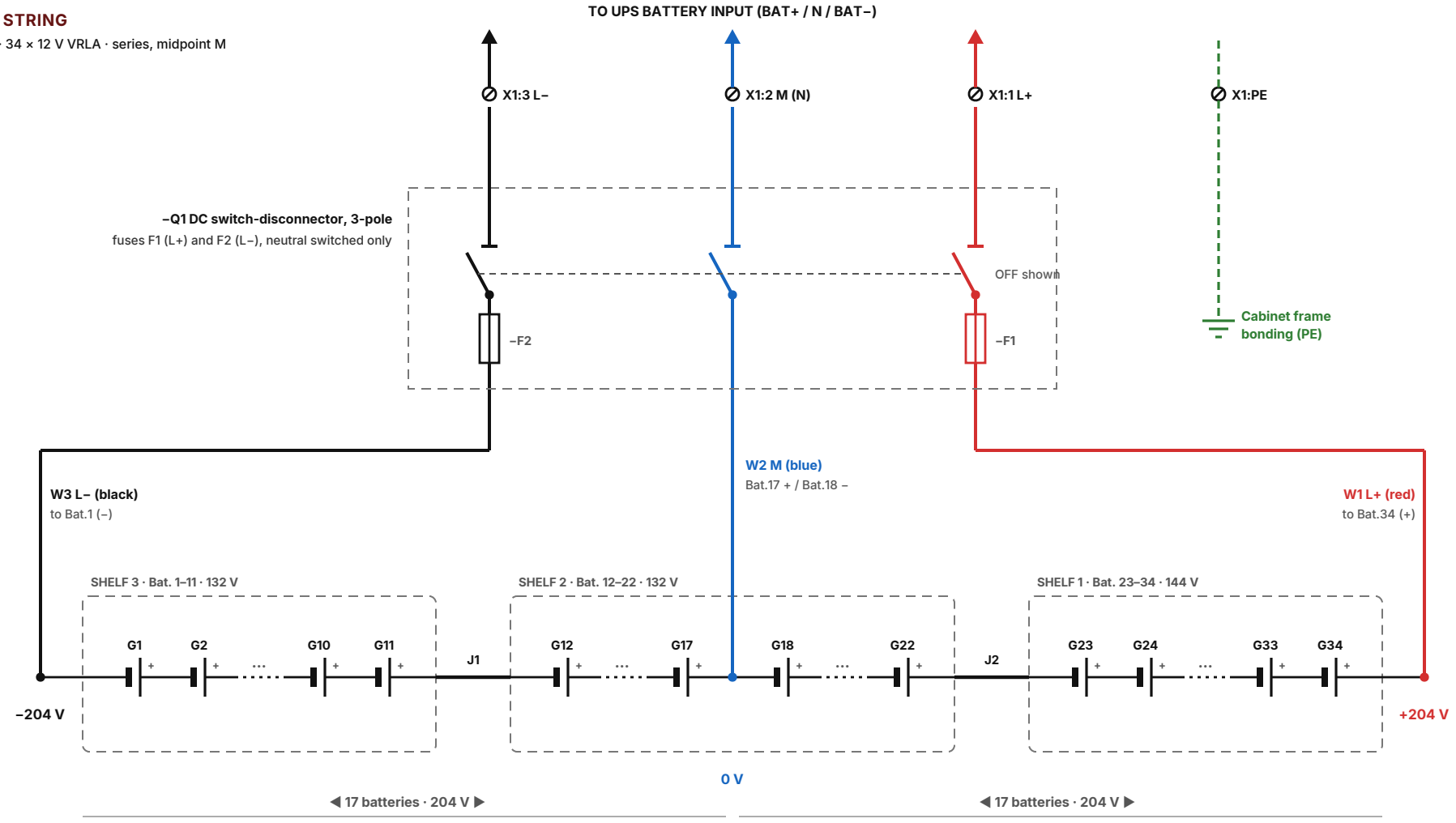

NOTES

1. Symbols to IEC 60617. Conductor names to IEC 60445: L+ positive, L– negative, M midpoint (neutral).
2. –G1…–G34 = Bat.1…Bat.34 on sheet 1. Bat.1 is the negative end. J = long jumper.
3. Voltages are nominal (12 V per battery). Float voltage per battery manufacturer data.
4. Fuses F1 (L+) and F2 (L–) only; M is switched, not fused. Fuse rating and cable size per UPS model.
5. Q1 OFF during installation. Verify 204 V (L+ to M), 204 V (M to L–), 408 V (L+ to L–) before closing Q1.

Battery positions and connections as built by AEC production.

AEC Technology Behind Power

AEC International Srl
Lainate (MI) — Italia

BB6 — ELECTRICAL SCHEMATIC
34 × 12 V 60 Ah · 17 + N + 17 · 408 VDC

Document	Sheet
DOC-BB6-WD-034	2 / 2

Rev.	Date	Scale
A	2026-10-10	NTS

AEC Technology Behind Power

BB6 BATTERY CABINET

Installation wiring diagram — sheet 1/2

36 × 12 V 60 Ah · 18 + N + 18 · ±216 VDC

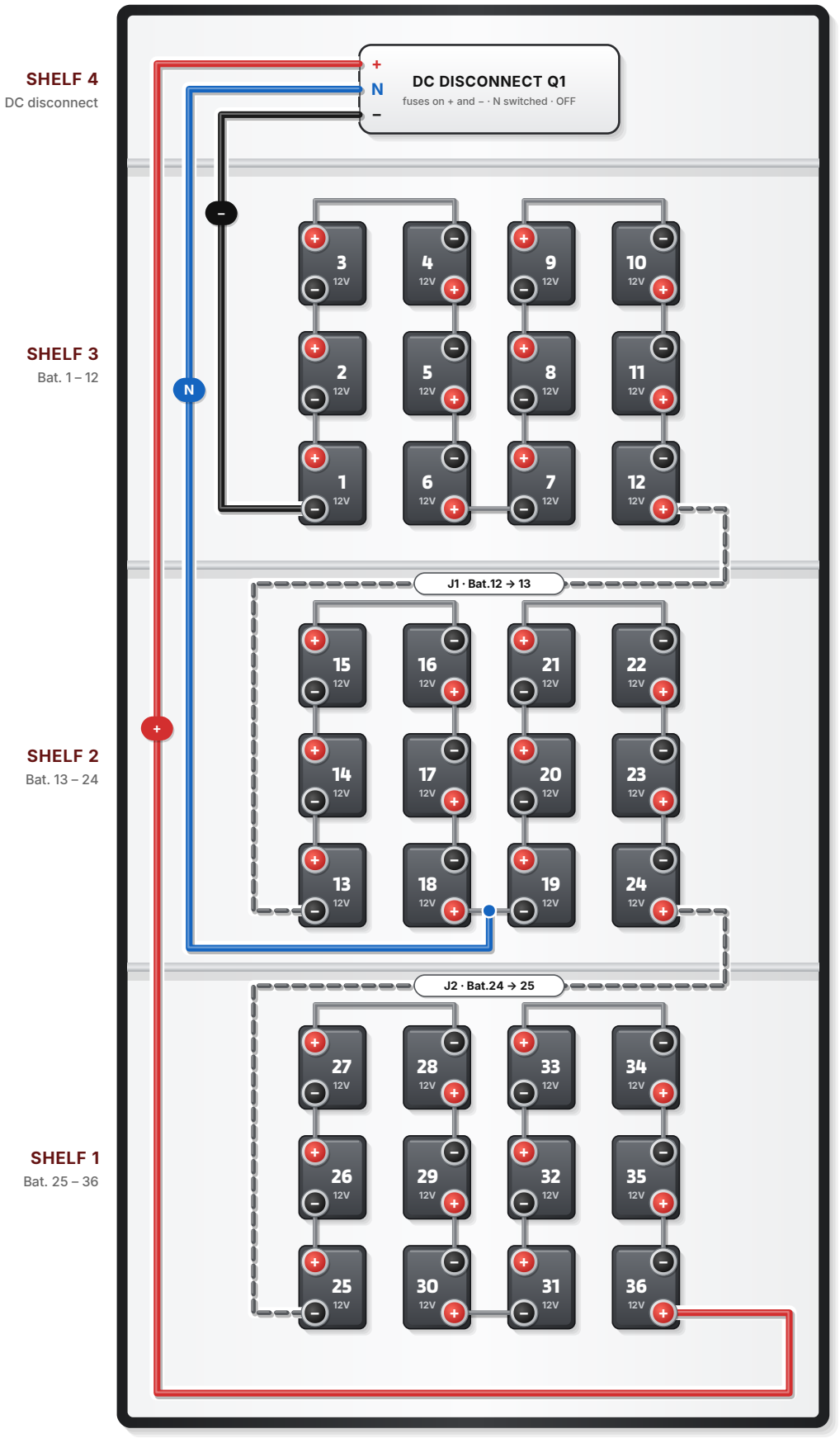

CONFIGURATION

Batteries	**36 × 12 V 60 Ah**
Strings	**18 + N + 18**
+ to N	**216 VDC**
N to –	**216 VDC**
+ to –	**432 VDC**

Nominal values (12 V per battery).

LEGEND

- Positive terminal (+)
- Negative terminal (–)
- Main cable + (red)
- Main cable – (black)
- Neutral N (blue)
- Battery link (short)
- Jumper (long)
- Cable passes over (no contact)

CABLES

- + — Q1 + → Bat.36 +
- – — Q1 – → Bat.1 –
- N — Q1 N → Bat.18 + / Bat.19 –
- J1 — Bat.12 + → Bat.13 –
- J2 — Bat.24 + → Bat.25 –

+ 33 short links (supplied with batteries)

WIRING ORDER

1. Q1 OFF for the whole job.
2. Place batteries exactly as shown, terminals oriented as drawn.
3. Fit the 33 short links.
4. Fit the jumpers J1, J2.
5. Connect N, then –, then + last.
6. Check voltages (table above) before closing Q1.

⚠ DANGER — up to 432 VDC
Qualified electricians only.
Insulated tools and PPE.

Electrical schematic: sheet 2/2.

BATTERY STRING

–G1 … –G36 · 36 × 12 V VRLA · series, midpoint M

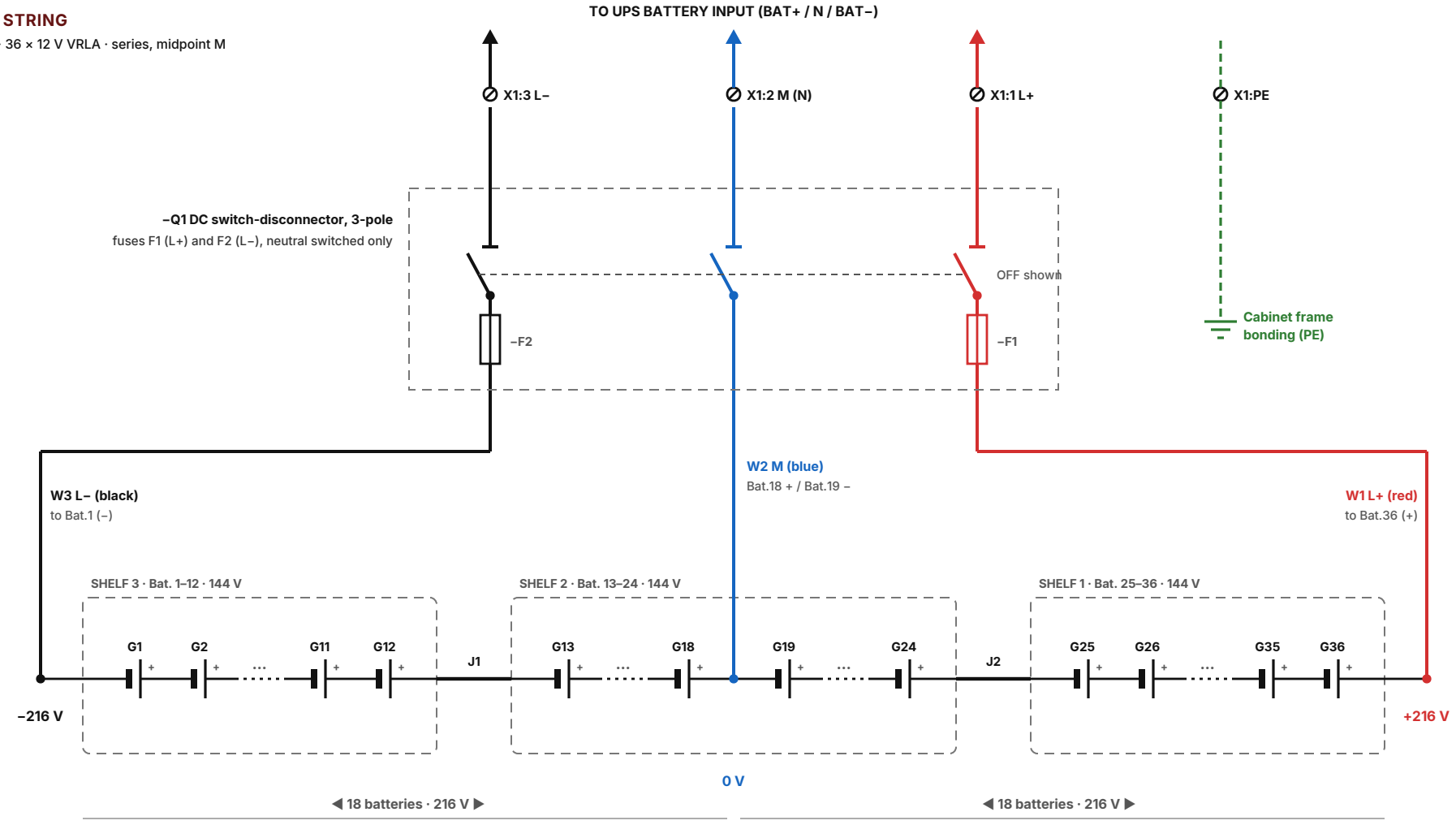

NOTES

1. Symbols to IEC 60617. Conductor names to IEC 60445: L+ positive, L– negative, M midpoint (neutral).
2. –G1…–G36 = Bat.1…Bat.36 on sheet 1. Bat.1 is the negative end. J = long jumper.
3. Voltages are nominal (12 V per battery). Float voltage per battery manufacturer data.
4. Fuses F1 (L+) and F2 (L–) only; M is switched, not fused. Fuse rating and cable size per UPS model.
5. Q1 OFF during installation. Verify 216 V (L+ to M), 216 V (M to L–), 432 V (L+ to L–) before closing Q1.

Battery positions and connections as built by AEC production.

AEC Technology Behind Power

AEC International Srl
Lainate (MI) — Italia

BB6 — ELECTRICAL SCHEMATIC
36 × 12 V 60 Ah · 18 + N + 18 · 432 VDC

Document	Sheet
DOC-BB6-WD-036	2 / 2

Rev.	Date	Scale
A	2026-10-10	NTS

AEC Technology Behind Power

BB6 BATTERY CABINET

Installation wiring diagram — sheet 1/2

38 × 12 V 60 Ah · 19 + N + 19 · ±228 VDC

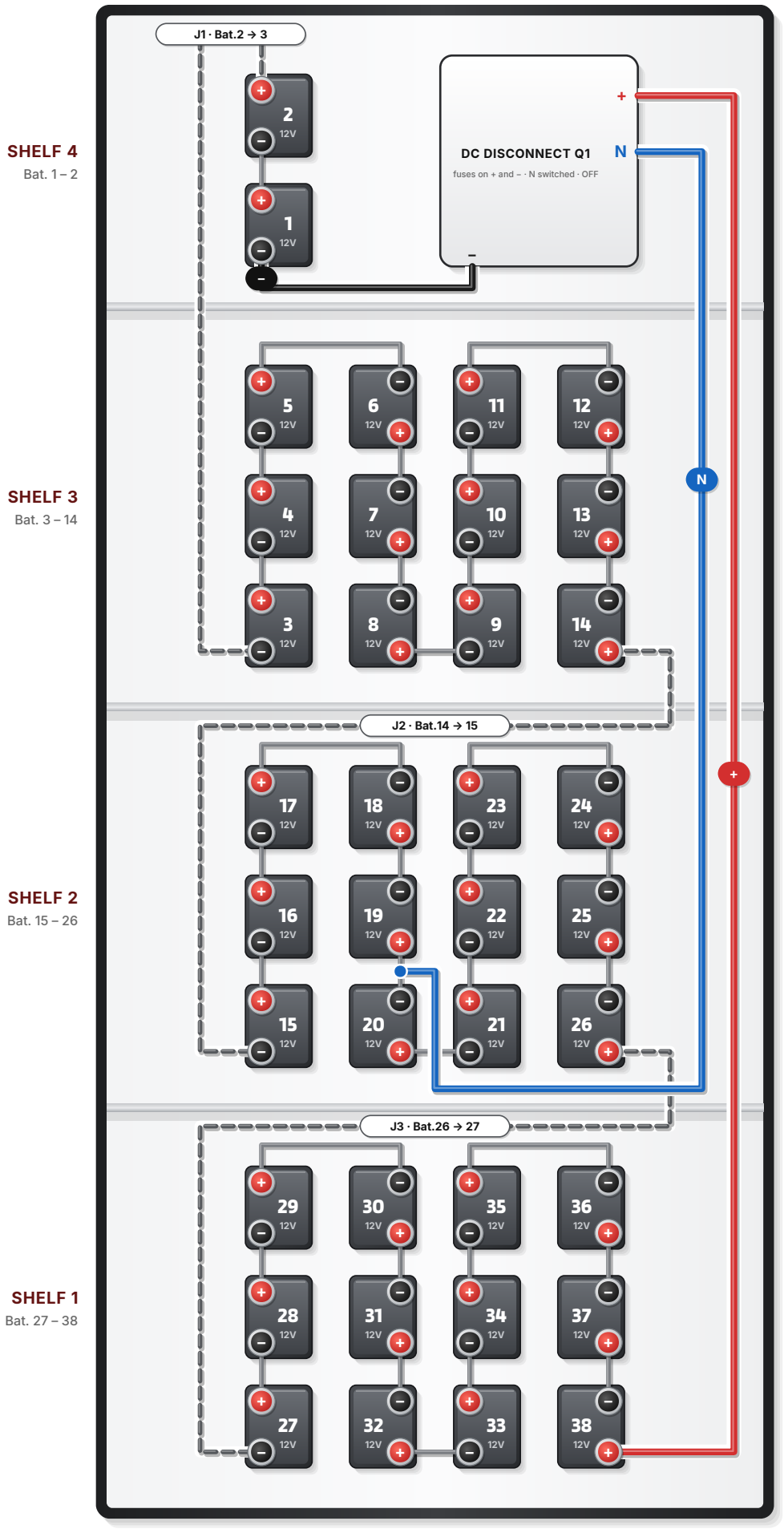

CONFIGURATION

Batteries	**38 × 12 V 60 Ah**
Strings	**19 + N + 19**
+ to N	**228 VDC**
N to –	**228 VDC**
+ to –	**456 VDC**

Nominal values (12 V per battery).

LEGEND

- Positive terminal (+)
- Negative terminal (–)
- Main cable + (red)
- Main cable – (black)
- Neutral N (blue)
- Battery link (short)
- Jumper (long)
- Cable passes over (no contact)

CABLES

+	Q1 + → Bat.38 +
–	Q1 – → Bat.1 –
N	Q1 N → Bat.19 + / Bat.20 –
J1	Bat.2 + → Bat.3 –
J2	Bat.14 + → Bat.15 –
J3	Bat.26 + → Bat.27 –

+ 34 short links (supplied with batteries)

WIRING ORDER

1. Q1 OFF for the whole job.
2. Place batteries exactly as shown, terminals oriented as drawn.
3. Fit the 34 short links.
4. Fit the jumpers J1, J2, J3.
5. Connect N, then –, then + last.
6. Check voltages (table above) before closing Q1.

⚠ DANGER — up to 456 VDC
Qualified electricians only.
Insulated tools and PPE.

Electrical schematic: sheet 2/2.

BATTERY STRING

–G1 … –G38 · 38 × 12 V VRLA · series, midpoint M

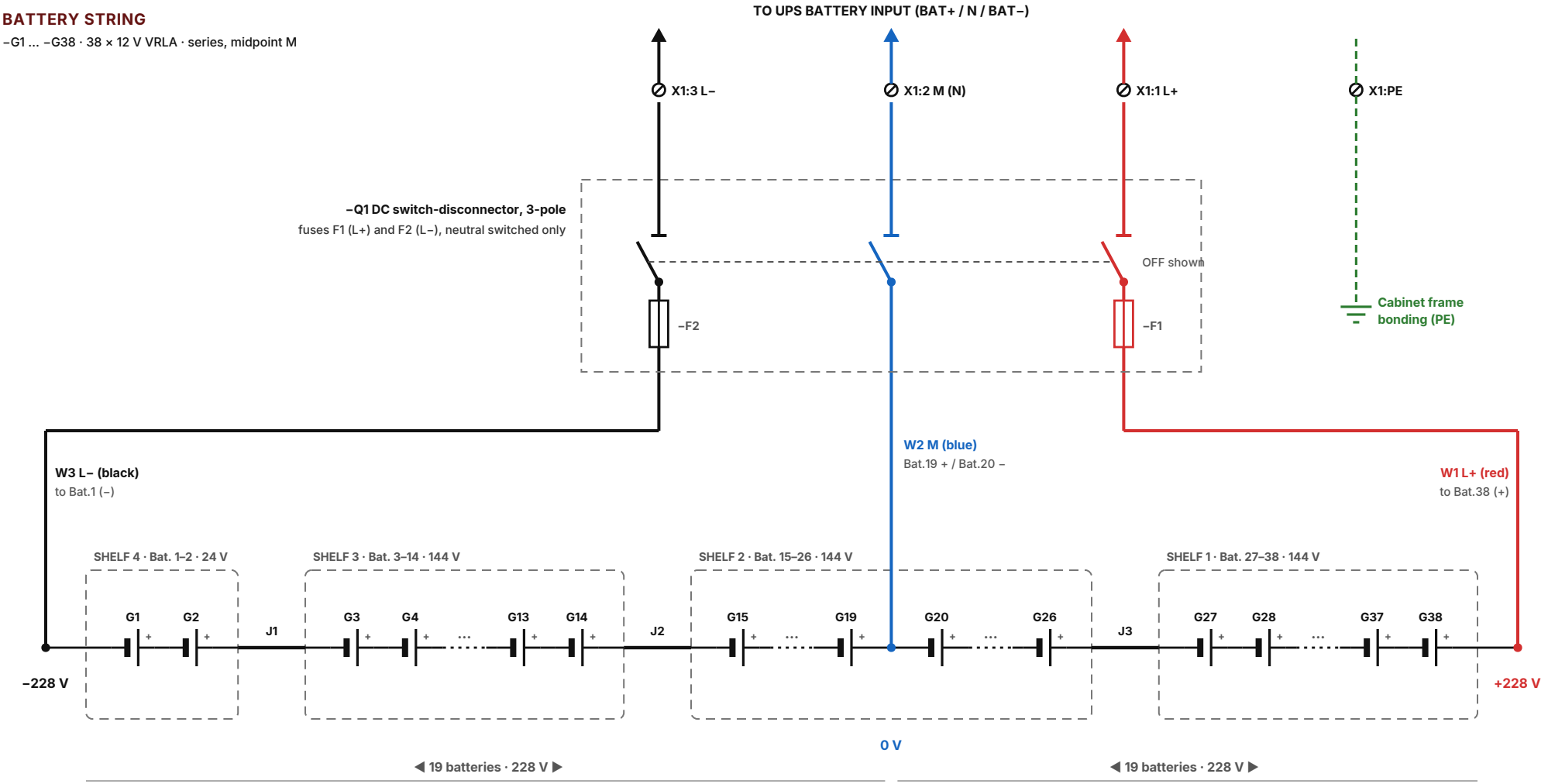

NOTES

1. Symbols to IEC 60617. Conductor names to IEC 60445: L+ positive, L– negative, M midpoint (neutral).
2. –G1…–G38 = Bat.1…Bat.38 on sheet 1. Bat.1 is the negative end. J = long jumper.
3. Voltages are nominal (12 V per battery). Float voltage per battery manufacturer data.
4. Fuses F1 (L+) and F2 (L–) only; M is switched, not fused. Fuse rating and cable size per UPS model.
5. Q1 OFF during installation. Verify 228 V (L+ to M), 228 V (M to L–), 456 V (L+ to L–) before closing Q1.

Battery positions and connections as built by AEC production.

AEC Technology Behind Power

AEC International Srl
Lainate (MI) — Italia

BB6 — ELECTRICAL SCHEMATIC
38 × 12 V 60 Ah · 19 + N + 19 · 456 VDC

Document	Sheet
DOC-BB6-WD-038	2 / 2

Rev.	Date	Scale
A	2026-10-10	NTS

AEC Technology Behind Power

BB6 BATTERY CABINET

Installation wiring diagram — sheet 1/2

40 × 12 V 60 Ah · 20 + N + 20 · ±240 VDC

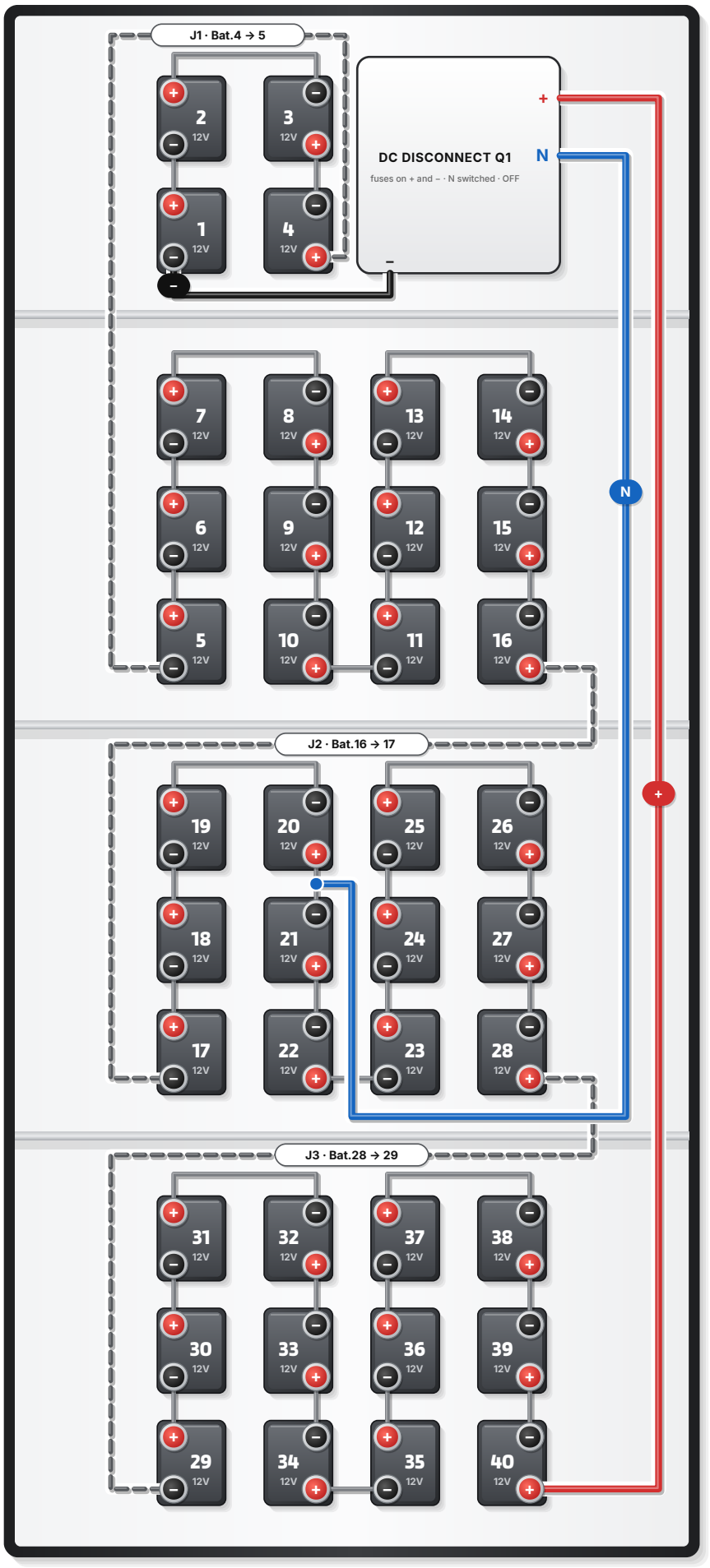

CONFIGURATION

Batteries	**40 × 12 V 60 Ah**
Strings	**20 + N + 20**
+ to N	**240 VDC**
N to –	**240 VDC**
+ to –	**480 VDC**

Nominal values (12 V per battery).

LEGEND

- Positive terminal (+)
- Negative terminal (–)
- Main cable + (red)
- Main cable – (black)
- Neutral N (blue)
- Battery link (short)
- Jumper (long)
- Cable passes over (no contact)

CABLES

+	Q1 + → Bat.40 +
–	Q1 – → Bat.1 –
N	Q1 N → Bat.20 + / Bat.21 –
J1	Bat.4 + → Bat.5 –
J2	Bat.16 + → Bat.17 –
J3	Bat.28 + → Bat.29 –

+ 36 short links (supplied with batteries)

WIRING ORDER

1. Q1 OFF for the whole job.
2. Place batteries exactly as shown, terminals oriented as drawn.
3. Fit the 36 short links.
4. Fit the jumpers J1, J2, J3.
5. Connect N, then –, then + last.
6. Check voltages (table above) before closing Q1.

⚠ DANGER — up to 480 VDC
Qualified electricians only.
Insulated tools and PPE.

Electrical schematic: sheet 2/2.

BATTERY STRING

–G1 … –G40 · 40 × 12 V VRLA · series, midpoint M

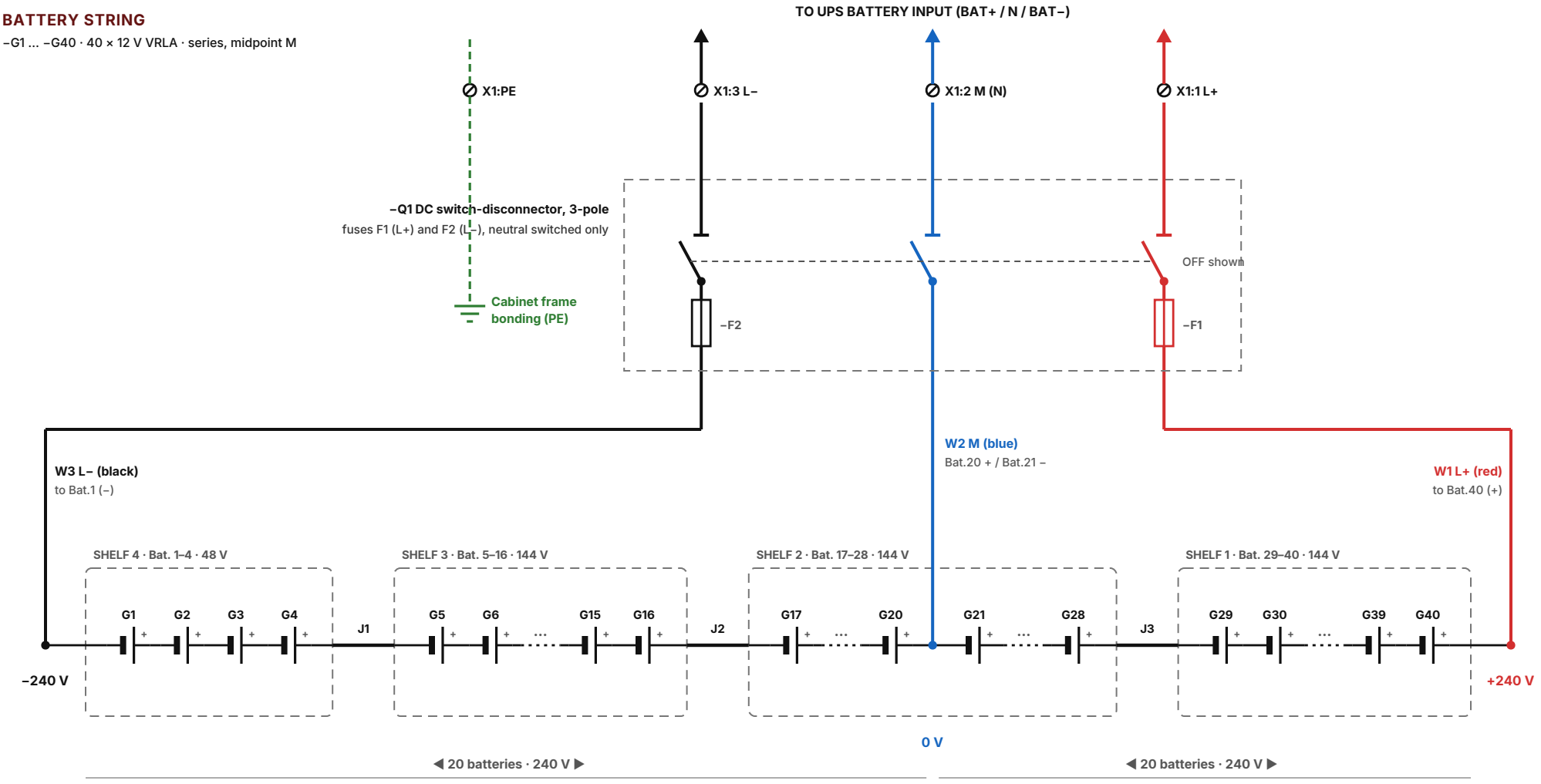

NOTES

1. Symbols to IEC 60617. Conductor names to IEC 60445: L+ positive, L– negative, M midpoint (neutral).
2. –G1…–G40 = Bat.1…Bat.40 on sheet 1. Bat.1 is the negative end. J = long jumper.
3. Voltages are nominal (12 V per battery). Float voltage per battery manufacturer data.
4. Fuses F1 (L+) and F2 (L–) only; M is switched, not fused. Fuse rating and cable size per UPS model.
5. Q1 OFF during installation. Verify 240 V (L+ to M), 240 V (M to L–), 480 V (L+ to L–) before closing Q1.

Battery positions and connections as built by AEC production.

AEC Technology Behind Power

AEC International Srl
Lainate (MI) — Italia

BB6 — ELECTRICAL SCHEMATIC
40 × 12 V 60 Ah · 20 + N + 20 · 480 VDC

Document	Sheet
DOC-BB6-WD-040	2 / 2

Rev.	Date	Scale
A	2026-10-10	NTS

BB6 — COMMISSIONING RECORD

Fill in at commissioning. Keep a copy with the cabinet.

Customer / site	
Cabinet code	
Serial number	
Configuration (batteries × Ah)	
Battery manufacturer / model	
Battery date code	
UPS model / serial number	
Fuse F1/F2 rating (A)	
Cable X1 → UPS (mm²) / length (m)	
PE conductor (mm²)	
Installation date	
Installer (name / company)	

Check	OK	Value / note
Cabinet level and fixed to the floor	☐	
PE connected to UPS / building earth	☐	
Batteries checked on receipt (OCV ≥ 12.6 V)	☐	
Batteries placed as in the wiring diagram	☐	
All terminal bolts tightened to the battery torque	☐	
Terminal covers fitted	☐	
Voltage + to N (V)	☐	
Voltage N to − (V)	☐	
Voltage + to − (V)	☐	
Halves differ < 1 %	☐	
Polarity checked at Q1 and at the UPS	☐	
Ambient temperature (°C)	☐	
Room ventilation as section 5.8	☐	
Q1 closed during UPS commissioning	☐	

Installer signature _____ Customer signature _____ Date _____

BB6 — BATTERY LOG SHEET

Record the voltage of every battery on float (section 7.1). Values more than 0.3 V from the average need checking.

Date	Operator	Ambient °C	String V (+ to –)

No.	V float	Note
1		
2		
3		
4		
5		
6		
7		
8		
9		
10		
11		
12		
13		
14		
15		
16		
17		
18		
19		
20		

No.	V float	Note
21		
22		
23		
24		
25		
26		
27		
28		
29		
30		
31		
32		
33		
34		
35		
36		
37		
38		
39		
40		

AEC
Technology Behind Power

AEC INTERNATIONAL S.r.l.
Via Nerviano 55 – 20045 Lainate (MI) – Italy
Tel. +39 02 94158991 · info@aecups.com
ups.aecups.com

Specifications are subject to change without notice. © 2026 AEC International S.r.l. – All rights reserved.