MODULAR ONLINE UPS · 480/277 V · INTERNAL BATTERIES

CIRRO-IB

30–150 kVA

Modular three-phase online double-conversion UPS with hot-swappable 30 kVA power modules, 240 internal VRLA blocks in 24 trays and the AEC color touchscreen, in the 150 kVA cabinet (5 slots).



User Manual

Installation · Operation · Maintenance

CIRRO-IB 150 kVA cabinet

30 · 60 · 90 · 120 · 150 kVA

30 kVA modules

COPYRIGHT AND NOTICES

Copyright © 2026 AEC UPS USA LLC. All rights reserved. No part of this document may be reproduced or transmitted in any form or by any means without the prior written consent of AEC UPS USA LLC.

Trademarks. AEC and CIRRO-IB are trademarks of AEC UPS USA LLC. All other trademarks and trade names mentioned in this document are the property of their respective owners.

Notice. The products, services and features you purchase are defined by the contract between AEC and the customer; some of those described in this document may not be included in your purchase or use. Unless the contract says otherwise, all statements, information and recommendations in this document are provided “as is”, without warranties, guarantees or representations of any kind, express or implied. The information in this document may change without notice. Every effort has been made to ensure its accuracy, but nothing in it constitutes a warranty of any kind, express or implied. The illustrations are for reference: the actual product may differ slightly.

AEC UPS USA LLC
4872 SW 72nd Ave, Miami, FL 33155
Technical support, 24/7 · phone and WhatsApp: **+1 786 553 2100**
service.us@aecups.com · sales@aecups.com · aecups.com

AEC-UM-CIRIB-US · Rev. G · November 2026. Rev. G sizes every breaker, conductor, neutral and equipment grounding conductor to NEC 2023 with its article, adds NFPA 70E arc-flash and lockout/tagout, grounding and ground-fault protection, NEC working space at the front and rear, heat and floor load, a data table for the electrical engineer and the menu tree, and corrects the battery capacity setting (54 Ah), battery life (68 °F reference), battery test conditions, battery-low warning, 90 kVA battery current and module weight.

BEFORE YOU START

About this manual

Thank you for choosing an AEC CIRRO-IB UPS. This manual describes the CIRRO-IB 30–150 kVA modular UPS with internal batteries: safety, the cabinet and its modules, planning, installation, the internal battery, operation with the breaker positions for every procedure, the AEC touchscreen, communication, maintenance, the event log and the specifications. Read it before you start, and keep it near the UPS.

MODELS COVERED

The CIRRO-IB 150 kVA cabinet (CIRIB-FRAME, 5 module slots: 30 to 150 kVA, CIRIB150-1X30 to -5X30), with 30 kVA power modules (CIRIB-PWR-30) and 240 internal 12 V VRLA blocks in 24 trays, 480/277 V three-phase, 4-wire. Ordering codes: Table 2-2.

WHO THIS MANUAL IS FOR

Qualified electricians install and wire the UPS. An engineer approved by AEC commissions it. Trained operators use it every day: they read the touchscreen and follow the procedures of the operation chapter.

Safety messages

Safety messages in this manual follow ANSI Z535.6. The signal word tells how serious the hazard is:

DANGER	A hazardous situation which, if not avoided, **will** result in death or serious injury.
WARNING	A hazardous situation which, if not avoided, **could** result in death or serious injury.
CAUTION	A hazardous situation which, if not avoided, could result in minor or moderate injury.
NOTICE	Information about practices that could damage the equipment, lose data, reduce performance or give unexpected results — not related to injury.

Other conventions

i NOTE Additional information that stresses or completes the text.

✓ TIP A hint that helps you solve a problem or save time.

Keys are shown like [ON]; menus like **Settings › Battery**. Numbers in red circles on a picture are explained in the list under it. Cross-references in red are links in the PDF.

QUICK START

From delivery to normal mode in six steps

The short version — each step points to the full instructions. Read the safety chapter first.

1. **Inspect the delivery and move the crate** with a forklift rated for up to 2,400 lb (1,089 kg). Section 4.1, page 28.
2. **Place the cabinet** with its working space and lower the four anchor bolts; fit the power modules from the bottom slot up and the 24 battery trays. Section 4.3, page 29, Section 4.5, page 32.
3. **Size the breakers, conductors, neutral and grounding for your build** (30 to 150 kVA, NEC) and wire PE first, then input, bypass and output, at 133 lb-in. Table 4-3, page 33, Section 4.8, page 34.
4. **Connect EPO, sensors, dry contacts and the network card.** Section 4.9, page 39.
5. **Commission with the AEC engineer:** close the breakers in the order of the breaker pictures and let the UPS go to inverter. Section 5.2, page 47.
6. **Check the battery settings and the system mode** on the touchscreen. Section 6.6, page 58.

30 kVA	240	480/277 V	Touch
hot-swappable power modules, up to 5 per cabinet	internal 12 V 9 Ah VRLA blocks, ±240 V DC	three-phase, 4-wire, 60 Hz	7-inch AEC color touchscreen

CONTENTS

Contents

1 Safety 7
1.1 General 7
1.2 Moving and installation 7
1.3 Commissioning and operation 8
1.4 Electrical safety: NFPA 70E, arc flash and lockout/tagout 8
1.5 Maintenance and replacement 9
1.6 Battery safety 9
1.7 Disposal 10
1.8 Standards 10

2 Product description 11
2.1 Introduction 11
2.2 Models and ordering codes 13
2.3 What is in the box 13
2.4 Front of the cabinet 13
2.5 Rear of the cabinet and breakers 16
2.6 Power modules and the bypass & monitoring module 17
2.7 The internal battery 19
2.8 How the UPS works 22
2.9 Operating modes 23
2.10 Protections 24

3 Planning the installation 25
3.1 Sizing the power modules 25
3.2 Planning the battery 25
3.3 Running on a generator 25
3.4 Heat, air and floor load 26
3.5 Data for the electrical engineer 26

4 Installation 28
4.1 Unpacking and moving 28
4.2 Site and environment 29
4.3 Working space and clearances 29
4.4 Positioning the cabinet 30
4.5 Installing power modules and battery trays 32
4.6 External protective devices 32
4.7 Ground-fault protection, grounding and source types 34
4.8 Power cables 34
4.9 Control and communication cables 39
4.10 Parallel system 43
4.11 Installation checklist 45

5 Operation 46
5.1 Operation at a glance 46
5.2 Starting the UPS 47
5.3 Starting on battery (cold start) 48
5.4 Transferring to bypass and back 48
5.5 Maintenance bypass 48
5.6 Servicing the bypass & monitoring module 49

5.7 Shutting the UPS down 50
5.8 Emergency power off (EPO) 50
5.9 Replacing a power module 50
5.10 Battery test and maintenance 51
5.11 Language, date and time 51

6 Touchscreen 52
6.1 Operator panel 52
6.2 Home page and main menu 53
6.3 Cabinet (system readings) 54
6.4 Module (power module readings) 56
6.5 Log 58
6.6 Set (settings) 58
6.7 Control 64
6.8 Scope (waveforms) 66

7 Everyday use 67
7.1 During a power outage 67
7.2 What the panel tells you 67
7.3 Good habits 67

8 Communication and monitoring 68
8.1 Setting up the SNMP-M card 68
8.2 UPS View software 68

9 Battery management 70

10 Preventive maintenance 72
10.1 Maintenance schedule 72
10.2 Component life 72
10.3 Battery life and temperature 72

11 Troubleshooting 74
11.1 Indicators and buzzer 74
11.2 What to do first 74
11.3 UPS event log 74

12 Specifications 79

A Parallel setting 81

B Drawings 82

C Quick reference 84

D Frequently asked questions 85

E Installation record 86

F Warranty 87

G Acronyms and abbreviations 88

01

CHAPTER 1

Safety

Read this chapter before you install, operate or service the UPS. Safety messages also appear in the chapters where each task is described.

⚠ WARNING · IMPORTANT SAFETY INSTRUCTIONS — SAVE THESE INSTRUCTIONS

This manual contains important instructions for the installation and operation of the CIRRO-IB modular UPS. Read it before installation. Do not put the UPS into operation until an engineer approved by AEC has commissioned it: otherwise there is a risk to people, the equipment may malfunction and the warranty is void.

Commissioning engineer: the engineer who installs or operates the equipment must be trained in electricity and safety, and familiar with the operation, commissioning and maintenance of the equipment.

1.1 General

⚠ DANGER

- Only commissioning engineers may install, commission and service the UPS.
- This UPS is designed for commercial and industrial applications only. It is not intended for life-support devices or systems.

⚠ WARNING

- Read all warning labels before operation and follow their instructions.
- Do not touch surfaces marked with the hot-surface label while the system runs: risk of burns.
- The UPS contains electrostatic-sensitive components. Take ESD precautions before you handle them.

1.2 Moving and installation

⚠ DANGER

- Keep the equipment away from heat sources and air outlets.
- In case of fire, use a dry-chemical (powder) extinguisher only. A liquid extinguisher can cause electric shock.

⚠ WARNING

- Do not start the system if you find any damage or abnormal part.
- Touching the UPS with wet materials or wet hands can cause electric shock.
- The cabinet weighs up to 2,400 lb (1,089 kg) with its batteries. Use lifting equipment rated for the weight.

⚠ CAUTION

- Use suitable equipment to handle and install the UPS. Wear safety shoes, protective clothing and other protective equipment.
- Protect the UPS from shock and vibration while you position it.
- Install the UPS in a suitable environment, as described in Section 4.2.

1.3 Commissioning and operation

⚠ DANGER

- Connect the grounding conductor before the power cables. Grounding and neutral conductors must comply with the National Electrical Code (NFPA 70) and local codes.
- Before you move or reconnect cables, switch off all input power sources and the battery breaker, and wait at least 10 minutes for the internal capacitors to discharge. Check with a multimeter that the voltage on the terminals is below 36 V DC (30 V AC) before you work.

⚠ WARNING

- The earth leakage current of the UPS and of its load flows in the grounding conductor and through any ground-fault device upstream (Section 4.7).
- After long storage, inspect and check the UPS before you start it.

1.4 Electrical safety: NFPA 70E, arc flash and lockout/tagout

⚠ DANGER

- Work on or near exposed live parts of this UPS is electrical work under NFPA 70E. Before anyone opens a cover with live parts behind it, operates the rear breakers with the rear doors open, or removes or inserts a power module, the employer carries out a shock risk assessment and an arc-flash risk assessment (NFPA 70E 130.4 and 130.5). They set the approach and arc-flash boundaries and the PPE.
- Wear the PPE the assessment calls for: at least arc-rated clothing, eye and face protection, voltage-rated gloves with leather protectors, and safety shoes. Use insulated tools rated for the voltage.
- Field-mark the UPS with an arc-flash warning label (NEC 110.16(A)). The label with the incident energy or the PPE category comes from the site's arc-flash study (NFPA 70E 130.5(H)).

⚠ WARNING · Lockout/tagout before you touch conductors

1. Shut the UPS down (Section 5.7) or put the load on an external maintenance bypass.
2. Open the external main input, bypass input and output breakers, and the **Battery** breaker in the cabinet. Lock and tag the external breakers (NFPA 70E Article 120).
3. Wait at least 10 minutes for the capacitors to discharge.
4. Test for absence of voltage on every terminal: phase to phase, phase to neutral, phase to ground, and on BATT +, BATT – and BATT N. Use a meter rated for at least 600 V and check it on a known live source before and after.

DANGER

The internal battery cannot be locked out from outside the cabinet. The **Battery** breaker isolates the DC bus of the modules, but the trays, the battery bus and the battery side of the breaker stay live at ±240 V DC. Treat each end of the battery as up to 294 V DC to ground until you have measured it.

1.5 Maintenance and replacement

DANGER

Maintenance and service that need internal access require special tools and trained personnel. Parts reached by opening a protective cover with a tool are not user-serviceable. Hazardous voltage is present inside the cabinet, in particular in the battery compartment. In normal operation, following this manual, there is no risk to the operator.

1.6 Battery safety

DANGER

- Battery maintenance and service that need internal access require special tools or keys and trained personnel.
- The internal battery is connected as strings of 40 blocks with the neutral at the midpoint: **±240 V DC to the neutral, 480 V DC between BAT+ and BAT−**, about 540 V DC on float charge and 552 V DC on boost charge (up to 588 V DC at the highest boost setting). This voltage is lethal.
- Follow the battery maker's precautions for work on or near a large battery bank at all times, in particular for the environment, protective clothing, first aid and fire fighting.
- Replace batteries only with the same type and number. Otherwise there is a risk of explosion or poor performance.
- Inspect the batteries before you connect them. If the package is damaged, the terminals are dirty, corroded or rusty, or the case is broken, deformed or leaking, replace the battery. Otherwise capacity can drop, current can leak or fire can result.
- Remove rings, watches, necklaces, bracelets and other metal jewelry. Wear rubber gloves and eye protection against arc flash. Use only tools with insulated handles.
- Batteries are heavy: a full tray weighs 63.5 lb (28.8 kg). Lift and handle them correctly to prevent injury and damage to the terminals.
- Do not disassemble, modify or damage a battery: risk of short circuit, leakage or injury.

WARNING · Sulfuric acid

- The VRLA batteries contain sulfuric acid. If a case breaks, acid can leak. Wear safety glasses, rubber gloves and an apron. Acid in the eyes can cause blindness; it burns the skin.
- At the end of its life a battery can short internally, lose electrolyte and corrode its plates, then overheat, swell or leak. Replace batteries before this happens.
- Replace a leaking or damaged battery, store it in an acid-resistant container and dispose of it according to local regulations.
- If electrolyte touches the skin, wash the area immediately with water.

Ambient temperature is a major factor in battery capacity and life. The nominal battery temperature is 68 °F (20 °C); higher temperatures shorten battery life, lower temperatures reduce capacity. Replace the batteries as their maker requires, to keep the rated runtime.

1.7 Disposal

⚠ WARNING

Dispose of used batteries according to local regulations. Waste lead-acid batteries are hazardous waste: store, transport and recycle them as the law requires. Do not dispose of them in any other way.

1.8 Standards

The UPS meets the UL 1778 standard. It is designed according to the following standards.

TABLE 1-1 Design standards

Standard	Subject
UL 1778	Uninterruptible power systems — safety (North America)
IEC 62040-1	UPS — general and safety requirements
IEC 62040-2	UPS — electromagnetic compatibility (EMC), Category C3
IEC 62040-3	UPS — performance and test requirements (VFI SS 111)
IEC 61000-3-12	Harmonic currents, equipment of 16 A to 75 A per phase
IEC 61000-3-11	Voltage fluctuations and flicker
IEC 61000-4-2	Immunity to electrostatic discharge
IEC 61000-4-3	Immunity to radiated electromagnetic fields
IEC 61000-4-4	Immunity to electrical fast transients / bursts
IEC 61000-4-5	Immunity to surges
IEC 61000-4-6	Immunity to conducted disturbances
IEC 61000-4-8	Immunity to power-frequency magnetic fields
IEC 63000	Restriction of hazardous substances (RoHS) — technical documentation
NFPA 70 (NEC)	Installation: branch circuits, conductors, working space, battery systems (Article 480)

1.8.1 FCC statement

This equipment has been tested and found to comply with the limits for a Class A digital device, pursuant to Part 15 of the FCC Rules. These limits are designed to provide reasonable protection against harmful interference when the equipment is operated in a commercial environment. This equipment generates, uses and can radiate radio-frequency energy and, if not installed and used in accordance with this manual, may cause harmful interference to radio communications. Operation of this equipment in a residential area is likely to cause harmful interference, in which case the user will be required to correct the interference at his own expense.

02

CHAPTER 2

Product description

The CIRRO-IB cabinet, its power modules and internal batteries, the front and rear, the breakers, how the UPS works, its operating modes and its protections.

2.1 Introduction

CIRRO-IB is a modular online double-conversion UPS for 480/277 V three-phase, 4-wire loads, with its batteries inside. It is built in one cabinet, the 150 kVA cabinet, 23.6 × 39.4 × 78.7 in (600 × 1,000 × 2,000 mm), with five slots for 30 kVA power modules: 30 to 150 kVA.

The cabinet holds up to 240 VRLA blocks of 12 V in 24 trays, the bypass & monitoring module, the touchscreen and four breakers: main input, output, maintenance bypass and battery. Up to three cabinets run in parallel.

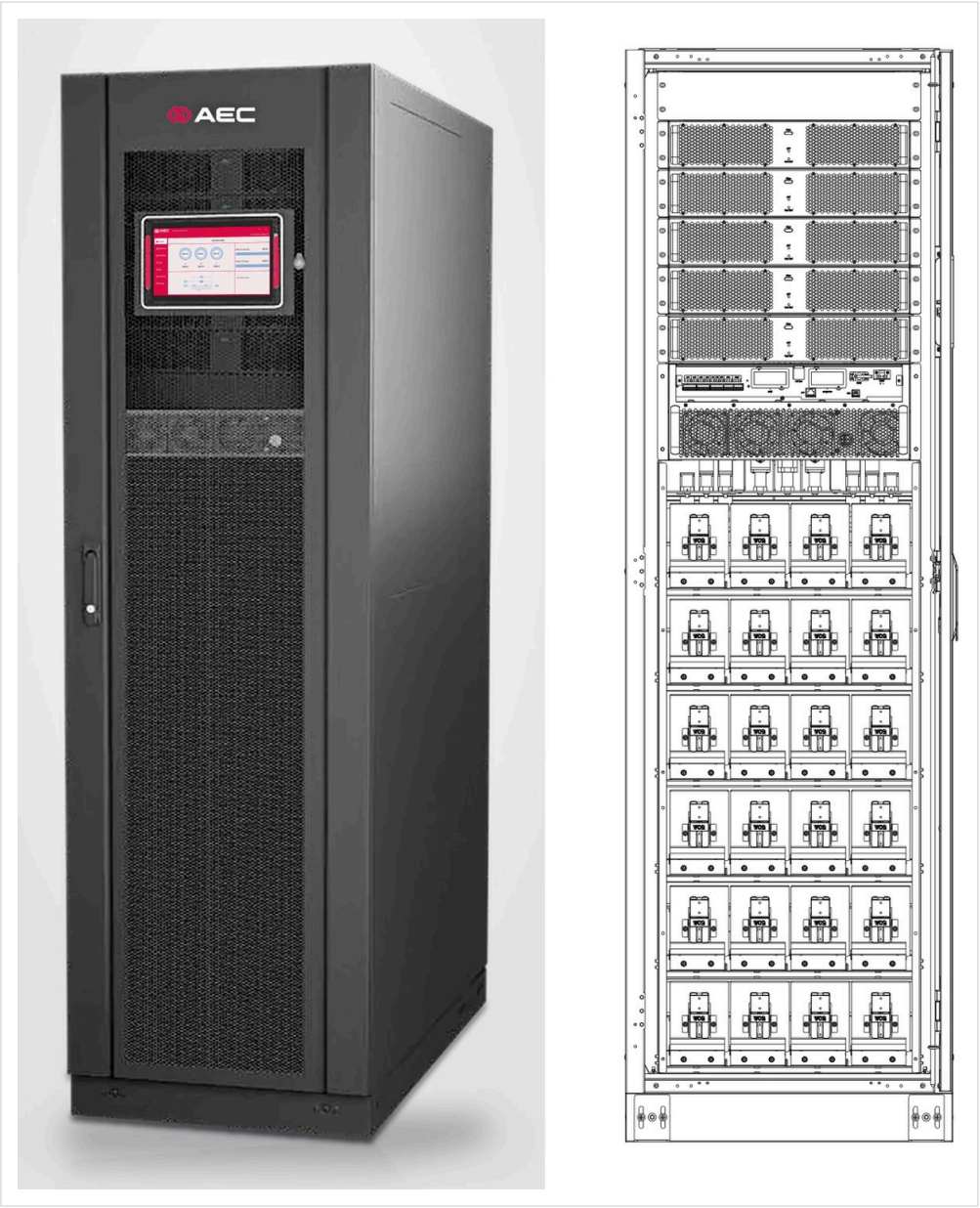

FIGURE 2-1 CIRRO-IB, door closed (render, left) and the 150 kVA cabinet with the door open (right)

TABLE 2-1 CIRRO-IB at a glance

Feature	What it gives you
30 kVA modules	Up to five, hot-swappable. Each module is a complete rectifier, inverter and charger.
240 blocks inside	24 trays of ten 12 V 9 Ah VRLA blocks: six strings of 40 blocks, ±240 V DC.
96 %	Efficiency in double conversion and in battery mode; input power factor above 0.99.
kVA = kW	Output power factor 1; 0 ms transfer between inverter and bypass when synchronized.
N+X	A redundant module carries the load if another stops or is replaced.
×3	Up to three cabinets in parallel, for power or redundancy.

2.2 Models and ordering codes

TABLE 2-2 CIRRO-IB ordering codes and weights

Code	Configuration	Weight
CIRIB150-1X30	30 kVA: 150 kVA cabinet, 1 × 30 kVA module, 240 × 12 V 9 Ah	2,190.5 lb (993.6 kg)
CIRIB150-2X30	60 kVA: 150 kVA cabinet, 2 × 30 kVA modules, 240 × 12 V 9 Ah	2,241.2 lb (1,016.6 kg)
CIRIB150-3X30	90 kVA: 150 kVA cabinet, 3 × 30 kVA modules, 240 × 12 V 9 Ah	2,291.9 lb (1,039.6 kg)
CIRIB150-4X30	120 kVA: 150 kVA cabinet, 4 × 30 kVA modules, 240 × 12 V 9 Ah	2,342.6 lb (1,062.6 kg)
CIRIB150-5X30	150 kVA: 150 kVA cabinet, 5 × 30 kVA modules, 240 × 12 V 9 Ah	2,393.3 lb (1,085.6 kg)
CIRIB-FRAME	150 kVA cabinet: 5 slots, bypass & monitoring module, breakers; no module, no tray	616 lb (279.4 kg)
CIRIB-PWR-30	Power module 30 kVA / 30 kW, hot-swappable	50.7 lb (23 kg)
CIRIB-BATTR-10×9A	Battery tray with ten 12 V 9 Ah VRLA blocks	63.5 lb (28.8 kg)
CIRIB-BATTR-EMPTY	Battery tray, empty (takes ten 12 V blocks)	5 lb (2.3 kg)
SNMP-M · DRYCNT	SNMP network card · dry-contact card	—

How to read the code. CIRIB150-3X30 means the 150 kVA cabinet (CIRIB150), then the number of 30 kVA modules (3 × 30 = 90 kVA installed). Order one module for every 30 kW of load and one more for N+1. Every cabinet comes with its 240 blocks in 24 trays.

2.3 What is in the box

Inspect the contents on delivery. Report damage to the carrier and missing parts to AEC.

- 1 × CIRRO-IB 150 kVA cabinet with the bypass & monitoring module, the touchscreen and the breakers, on four anchor bolts (no casters: moved with a pallet truck or forklift)
- The power modules ordered and the 24 battery trays (fitted, or packed separately — see the packing list)
- 1 × user manual

2.4 Front of the cabinet

With the door closed: the touchscreen and the EPO button on the perforated front door.

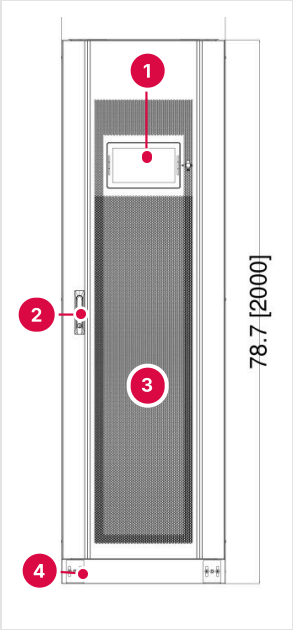

1	Touchscreen, 7-inch color, with the status indicators and the EPO button (Section 6.1)
2	Door handle and lock
3	Perforated door: air in
4	Base with the anchor bolts

FIGURE 2-2 Front of the cabinet, door closed

Behind the door, from top to bottom: the power-module slots, the bypass & monitoring module, the battery connection row and the battery trays. The cabinet has five module slots.

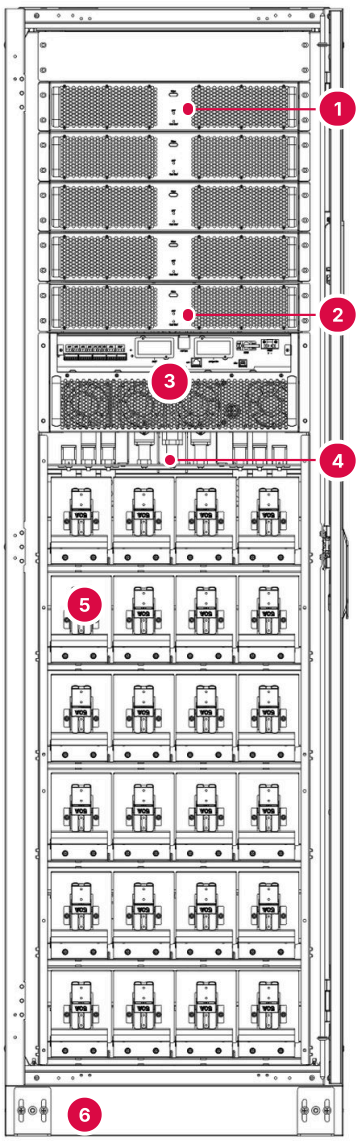

1. 5 power-module slots (No. 5 at the top)
2. Power module No. 1, bottom slot
3. Bypass & monitoring module: communication panel (Section 4.9) and fans
4. Battery connection row: the tray cables plug into the battery bus
5. Battery trays, 4 per row × 6 rows = 24 trays
6. Base and anchor bolts

FIGURE 2-3 The 150 kVA cabinet with the front door open

2.5 Rear of the cabinet and breakers

Open the two rear doors to reach the breaker panel and, behind the lower cover, the power terminals. The cabinet has four breakers: **Battery** at the top, then **Output**, **Maintenance** and **Input** from left to right.

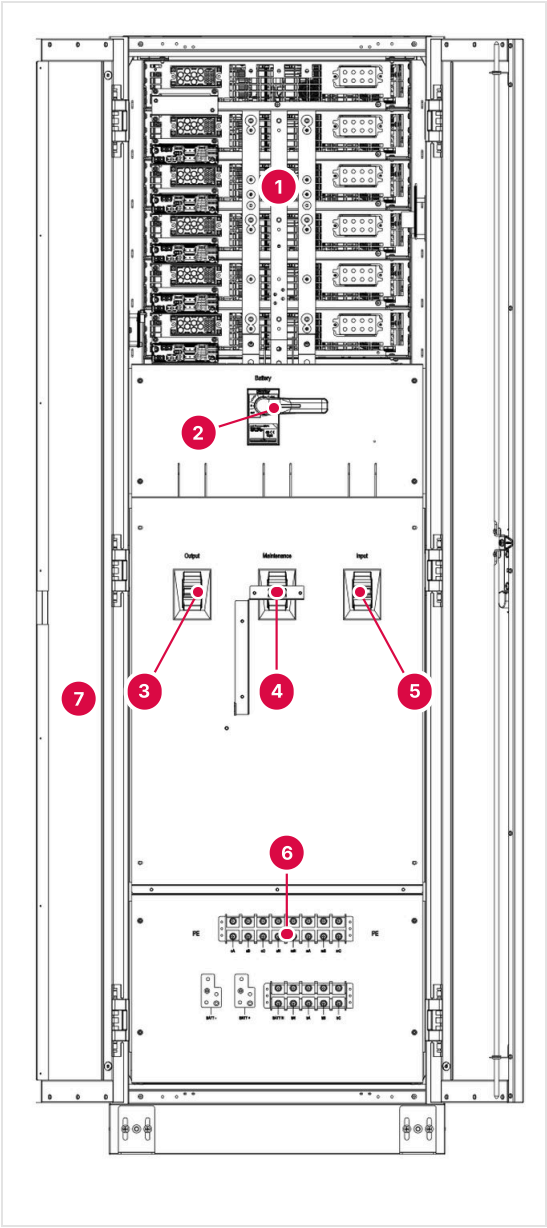

1. Module backplane: the modules plug in from the front
2. Battery breaker
3. Output breaker
4. Maintenance bypass breaker
5. Input breaker
6. Power terminals, behind the lower cover (Figure 4-7)
7. Rear doors: air out

FIGURE 2-4 The 150 kVA cabinet with the rear doors open

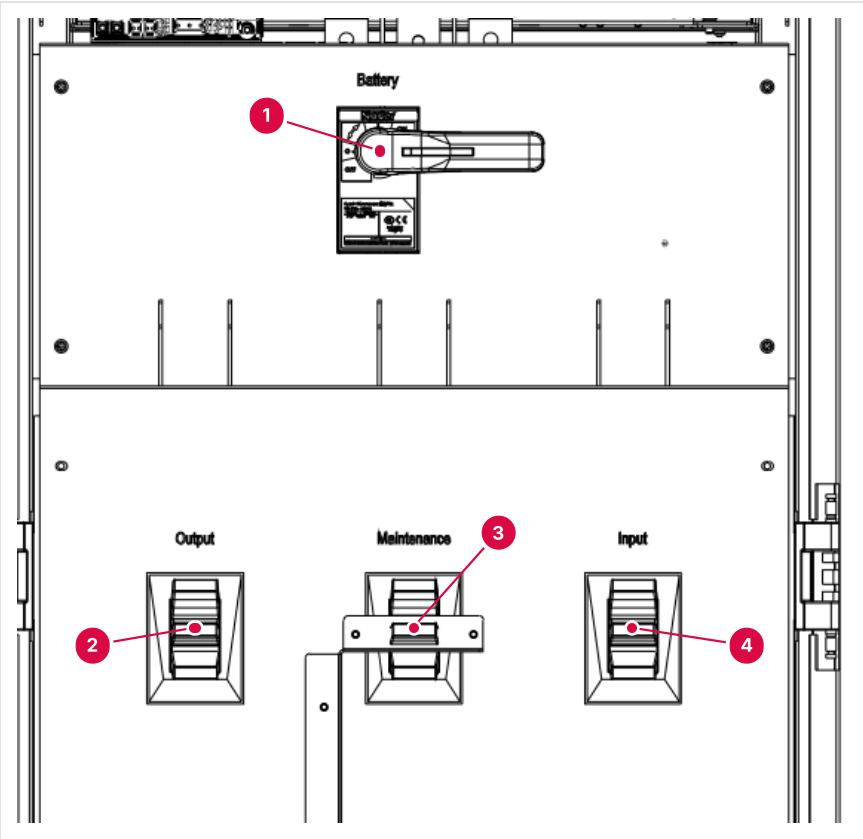

1. **Battery** — battery breaker. Connects the 240 internal blocks to the DC bus of the modules. The UPS trips it at end of discharge and on EPO.
2. **Output** — output breaker. Connects the inverters and the static bypass to the output terminals and the load.
3. **Maintenance** — maintenance bypass breaker. Connects the bypass input straight to the output, around the UPS, for service. Normally OFF.
4. **Input** — main input breaker. Feeds the rectifiers of the power modules from the main input terminals.

FIGURE 2-5 The breaker panel of the 150 kVA cabinet — each breaker is labeled on the panel

NOTICE

The bypass input has no breaker in the cabinet: protect and switch it with the upstream bypass breaker (Section 4.6). The breakers are 3-pole; the neutral is not switched.

2.6 Power modules and the bypass & monitoring module

How the UPS is built. Figure 2-6 and Figure 2-7 show the 150 kVA cabinet in 3D, door open and pulled apart: the power modules at the top, the bypass & monitoring module with the communication panel under them, the battery connection row, and the 24 battery trays at the bottom. The breakers and the power terminals are at the rear, behind the two rear doors (Section 2.5).



1. Power module No. 1, bottom slot (No. 5 at the top)
2. Bypass & monitoring module: communication panel
3. Bypass & monitoring module: fans
4. Battery connection row: the trays plug into the battery bus
5. Battery trays, 24
6. Touchscreen, on the door (seen from inside)

FIGURE 2-6 150 kVA cabinet, door open (3D render) — illustration, internal layout simplified

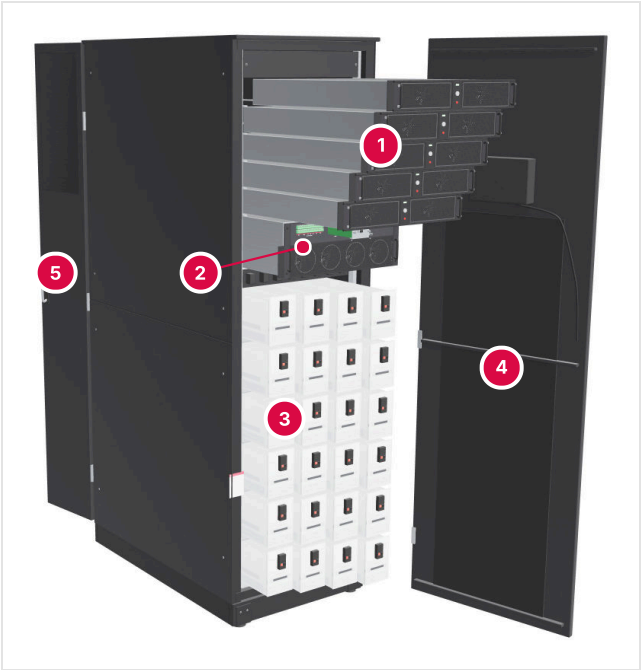

1. Power modules, 30 kVA, hot-swappable
2. Bypass & monitoring module: static switch, controls, communication panel
3. Battery trays: ten 12 V blocks each
4. Front door
5. Rear doors: breakers and power terminals behind them

FIGURE 2-7 150 kVA cabinet pulled apart (3D render) — illustration, internal layout simplified

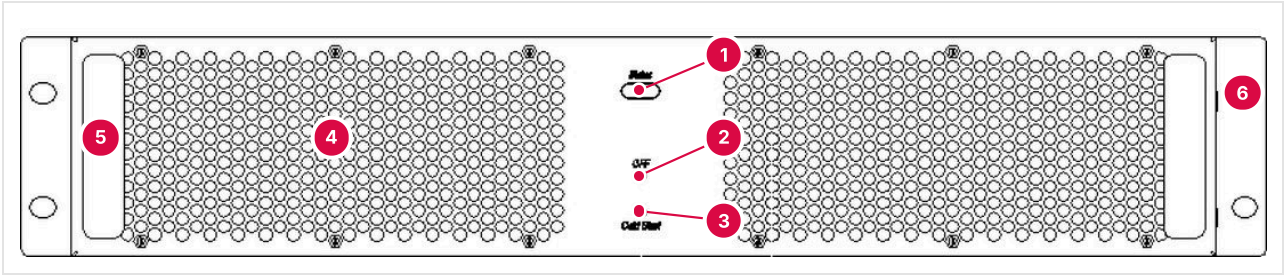

1. Status LED, green: the module runs
2. OFF pinhole: takes the module out of the system (enable it first, Section 6.7)
3. Cold Start pinhole: starts the module on battery (Section 5.3)
4. Fan grilles: air in, front to back
5. Handles
6. Mounting ears with the fixing screws

FIGURE 2-8 Front of a 30 kVA power module (CIRIB-PWR-30)

TABLE 2-3 Power module CIRIB-PWR-30

Item	Value
Rating	30 kVA / 30 kW
Inside	Rectifier, inverter, DC charger

Item	Value
Size	17.3 × 26.7 × 3.3 in (440 × 678 × 85 mm), 2U
Weight	50.7 lb (23 kg)
Front	Green Status LED; OFF and Cold Start pinholes; two handles, fixing screws
Slots	5, numbered from 1 at the bottom

The **bypass & monitoring module** sits under the power modules. It holds the static bypass switch, the controls, the communication panel with the red cold-start button (Figure 4-10) and its fans. It is not hot-swappable: only AEC service removes it, with the load on the maintenance bypass (Section 5.6).

2.7 The internal battery

The 240 blocks sit in 24 trays of ten. Four trays in series make one string of 40 blocks; the neutral is taken between the second and the third tray (between blocks 20 and 21). Six strings run in parallel on the battery bus.

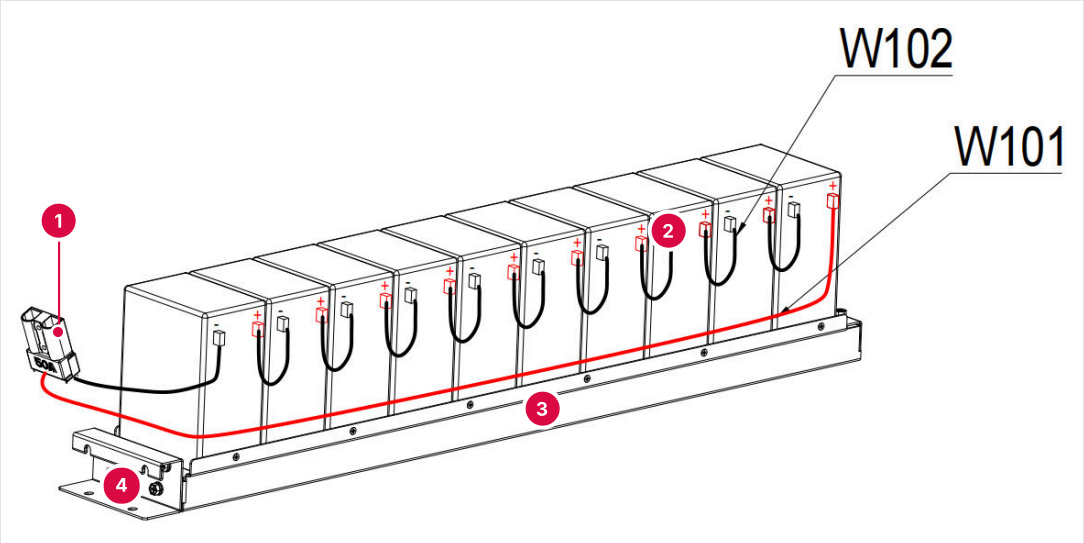

1. Anderson 2-pin connector: the tray plugs in with it
2. W102: block-to-block jumpers
3. W101: tray cable from the last block back to the connector
4. Tray rail and front plate with its fixing screw

FIGURE 2-9 One battery tray CIRIB-BATTR-10x9A — ten 12 V blocks in series

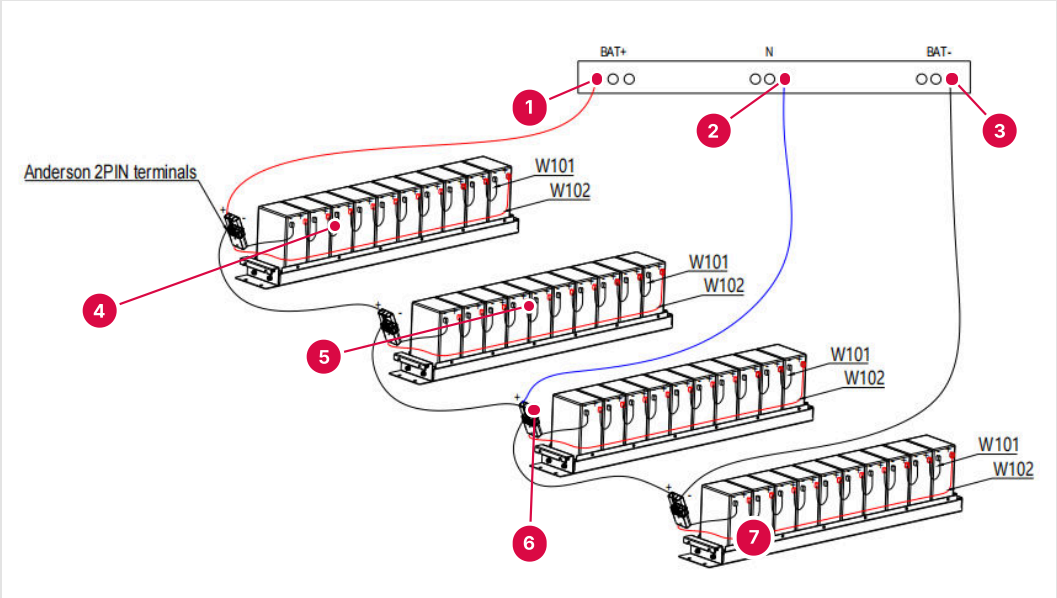

1	BAT+ busbar	5	Tray 2
2	N busbar	6	Tray 3: the neutral joins here
3	BAT– busbar	7	Tray 4
4	Tray 1		

FIGURE 2-10 One string: four trays in series, BAT+ from tray 1, N between trays 2 and 3, BAT– from tray 4, to the battery busbar

In the cabinet the trays sit in six rows of four, under the battery connection row (Figure 2-11). Each tray slides out to the front; its connector is on the front plate. The battery bus runs to the battery breaker at the rear (Figure 4-5, item 2).

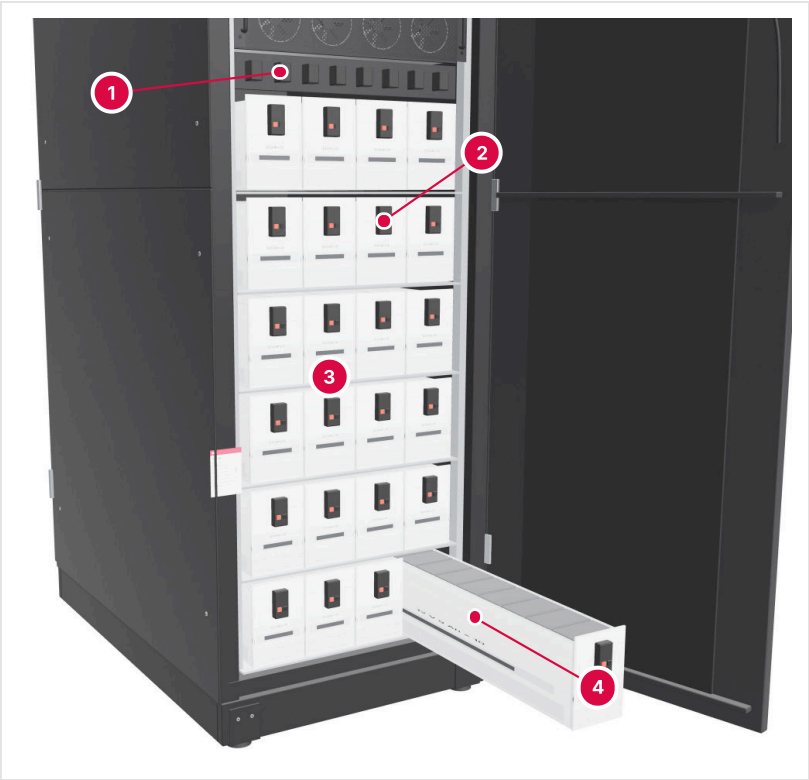

1. Battery connection row: the battery bus connectors
2. Tray connector, on the front plate of each tray
3. Battery trays, 6 rows × 4 = 24
4. Tray pulled out: ten 12 V 9 Ah blocks

FIGURE 2-11 Battery compartment, door open, one tray pulled out (3D render) — illustration, tray contents simplified

TABLE 2-4 The battery

Item	Value
Blocks	240 × 12 V 9 Ah VRLA. 7 Ah blocks are an option: capacity setting 42 Ah and shorter runtimes; ask AEC for their runtime.
Trays	24 × 10 blocks; 63.5 lb (28.8 kg) each
Strings	6 strings of 40 blocks in parallel; neutral between blocks 20 and 21
Voltage	±240 V DC nominal (480 V DC between BAT+ and BAT−)
Charge	Float 2.25 V/cell (540 V DC), boost 2.30 V/cell (552 V DC); highest boost setting 2.45 V/cell (588 V DC); best charge current 0.1 C (5.4 A), maximum 0.2 C (10.8 A) for 54 Ah
Temperature compensation	−1.7 mV/°F/cell (−3.0 mV/°C/cell), settable 0 to −2.8 mV/°F (0 to −5.0 mV/°C), with the optional sensor
End of discharge	1.65 V/cell at 0.6 C · 1.75 V/cell at 0.15 C
Battery breaker	In the cabinet (Figure 2-5, item 1)
Cold start	From the batteries, about 60 s to output

TABLE 2-5 Backup time with the 240 internal blocks (minutes, new batteries, 77 °F / 25 °C)

Build	At 50 % load	At 100 % load
30 kVA (1 module)	45	14
60 kVA (2 modules)	14	6
90 kVA (3 modules)	11	3
120 kVA (4 modules)	6	2
150 kVA (5 modules)	about 4 (estimated)	less than 2 — ask AEC

The backup time depends on the load in kW, not on the number of modules: 60 kVA at 100 % and 120 kVA at 50 % both draw 60 kW and give the same 6 minutes. 150 kVA at 50 % (75 kW) lies between 60 kW (6 min) and 90 kW (3 min): about 4 minutes, estimated. Ask AEC for the runtime at your exact load.

2.8 How the UPS works

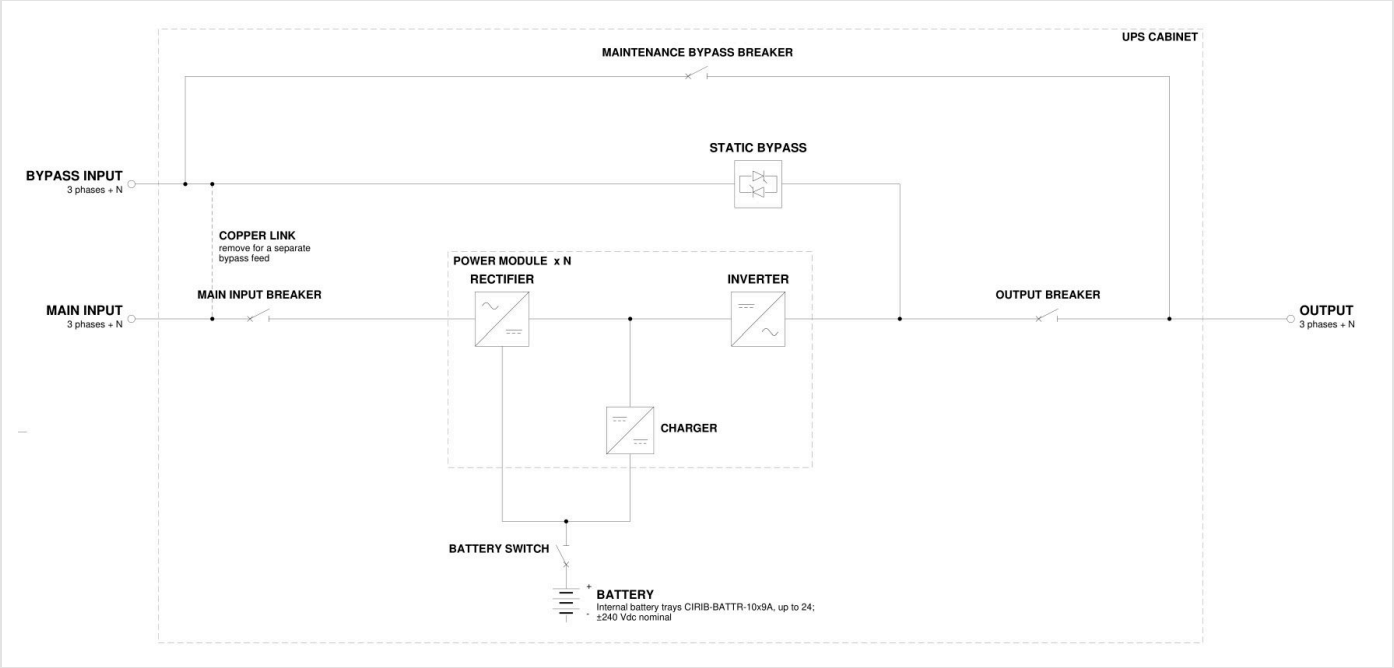

FIGURE 2-12 Single-line diagram — one line stands for the three phases and the neutral; PE not shown

TABLE 2-6 The parts of the power path

Part	What it does
Rectifier	In each power module: turns the utility into a regulated DC bus, drawing a near-sinusoidal current (power factor above 0.99, current THD 3 % or less).
Inverter	In each power module: rebuilds the three-phase sine wave from the DC bus. The modules share the load.
Charger	In each power module: charges the internal battery from the DC bus; on a utility failure the battery feeds the DC bus with no break.
Static bypass	In the bypass & monitoring module: feeds the load from the bypass input when the inverters are off, overloaded or faulty.
Copper link	Joins the main input and the bypass input as delivered (single feed). Remove it for a separate bypass feed.

Part	What it does
Breakers	Main input, output, maintenance bypass and battery, in the cabinet (Figure 2-5). The bypass input has no breaker of its own. The maintenance bypass joins the output after the output breaker.

2.9 Operating modes

TABLE 2-7 Operating modes

Mode	What happens
Normal	The rectifiers turn the utility into DC and the inverters turn it back into regulated AC for the load. The chargers keep the battery charged.
Battery	On a utility failure the inverters run from the internal battery with no break. When the utility returns the UPS goes back to normal mode by itself. The UPS can also start from the battery alone (cold start, Section 5.3).
Bypass	With the inverters off, overloaded, too hot or faulty, the static bypass feeds the load from the bypass input: the load is not protected. A transfer out of synchronism interrupts the load for less than 3/4 of a cycle (12.5 ms at 60 Hz).
Maintenance bypass	With the maintenance bypass breaker closed the load is fed from the bypass input, so the UPS and the battery can be serviced without stopping the load. Dangerous voltage stays on the input, output and neutral terminals and the internal busbars.
ECO	The load runs on the static bypass while the bypass stays within its window; the inverters stand by and the chargers keep the battery charged. If the bypass fails the inverters take the load in less than 10 ms.
Auto restart	After end of discharge the UPS restarts by itself when the utility returns. The commissioning engineer sets the mode and the delay.
Module sleep	At part load the modules not needed stand by in turn, so they age evenly; they wake as the load grows.
Frequency converter	40–70 Hz in, 50 or 60 Hz out; the static bypass is disabled.

The thick line in each diagram shows the power path in that mode.

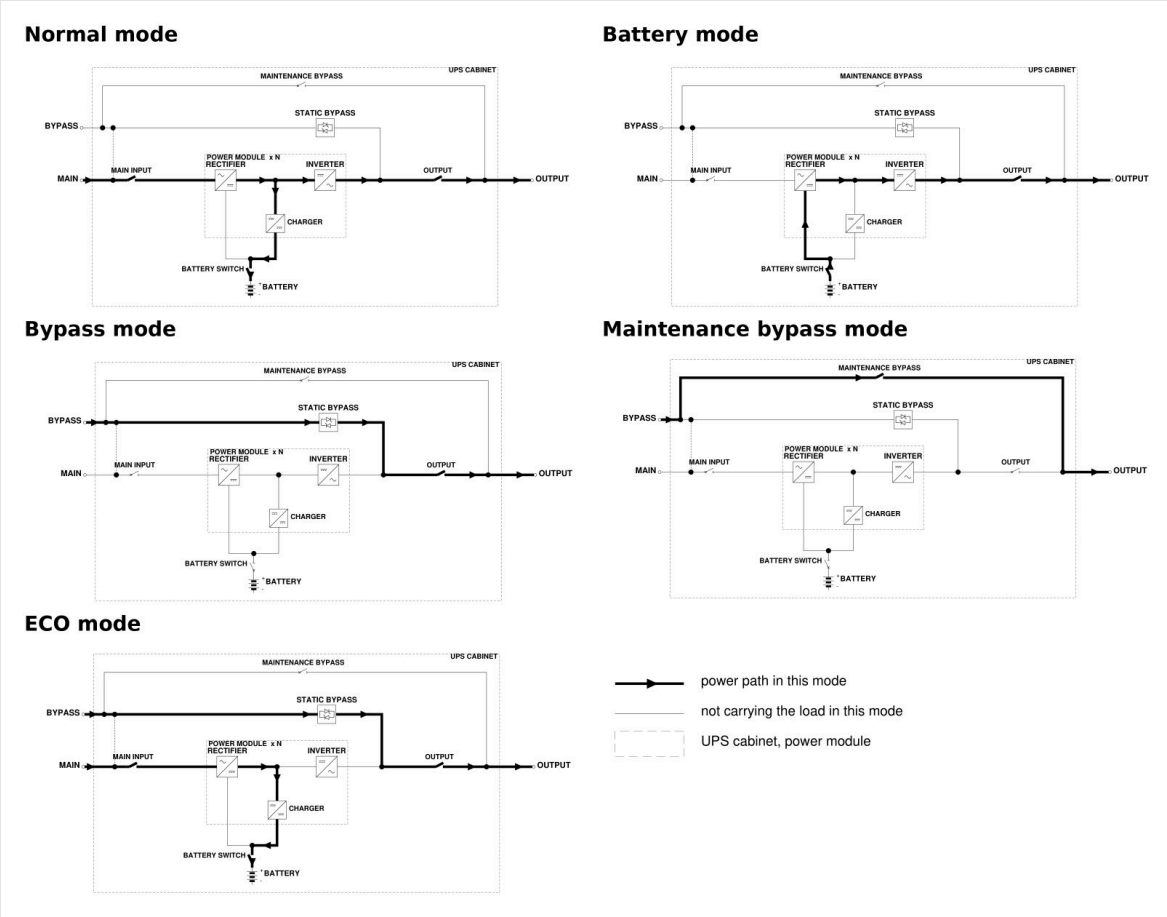

FIGURE 2-13 The power path in each operating mode — thick line: power path; thin line: not carrying the load

NOTICE

On bypass, on maintenance bypass and in ECO mode the load is not protected from utility disturbances. The transfer from ECO to battery mode interrupts the load for less than 10 ms: make sure the load accepts it.

2.10 Protections

- **Overload, inverter:** 110 % for 1 h · 125 % for 10 min · 150 % for 1 min · above 150 % for 200 ms, then transfer to bypass.
- **Overload, bypass:** 110 % continuous · 110–125 % for 5 min · 125–150 % for 1 min · above 150 % for 1 s.
- **Output short circuit.**
- **Temperature and wear:** module and inlet over-temperature, fan failure; capacitor, fan and dust-filter service timers.
- **Battery:** battery low pre-warning shortly before end of discharge, end-of-discharge shutdown, reverse battery connection, battery breaker trip at end of discharge or on EPO.
- **Input:** input neutral lost, bypass phase sequence, bypass voltage and frequency window; lost N+X redundancy.
- **EPO:** covered button on the front and remote EPO input.

CHAPTER 3

03 Planning the installation

Sizing the power modules for capacity and redundancy, the battery, running on a generator, heat and floor load, and the data the electrical engineer needs.

3.1 Sizing the power modules

CIRRO-IB uses hot-swappable power modules of 30 kVA / 30 kW (output power factor 1: kVA = kW). The cabinet holds up to five. Size the system on the kW the loads draw.

1. Add up the active power (kW) of all the loads, from their data sheets or from measurements on the existing installation.
2. Divide by the module rating (30 kW) and round up: that is N, the number of modules that carry the load.
3. For redundancy add one module (N+1) or more (N+X). If a module fails or is removed for service, the others carry the load with no interruption.
4. Keep the load at or below about 80 % of the capacity that remains with one module out, for start-up currents and growth.
5. Up to five modules fit the cabinet; for more power, up to three cabinets run in parallel (Section 4.10).
6. Set the number of redundant modules in **Set › Sys Set** (Figure 6-10, item 10), so that the UPS alarms when redundancy is lost.

TABLE 3-1 Worked example — 80 kW of load

Step	Result
Load	80 kW
Modules for the load (N)	80 ÷ 30 = 2.67 → 3 modules
With 80 % margin	80 ÷ (30 × 0.8) = 3.33 → 4 modules
For N+1 redundancy	5 modules: 150 kVA cabinet, CIRIB150-5X30

✓ TIP Leave the free slots closed with their covers: you can add modules later, hot-swapped, as the load grows. Size the breakers and conductors for the final build from the start (Table 4-3).

3.2 Planning the battery

CIRRO-IB carries its battery inside: 24 trays of ten 12 V 9 Ah VRLA blocks. The runtime depends on the load (Table 2-5). For a longer runtime, ask AEC.

- The number of blocks per string and the capacity entered in **Set › BATT Set** must match the installed battery exactly.
- Battery life is best at 68 °F (20 °C) and halves for each 18 °F (10 °C) above it. Plan the room temperature for it.
- Plan the floor for the full weight: up to 2,400 lb (1,089 kg) on a 23.6 × 39.4 in (600 × 1,000 mm) footprint, about 371 lb/ft² (Table 3-2).

3.3 Running on a generator

The PFC rectifier (input power factor above 0.99) and the wide input window let the UPS run from a standby generator.

- As a general rule, choose a generator rated at least 1.5 times the UPS input power, to cover the battery recharge as well.
- A dry-contact input tells the UPS that the generator runs (**Set › Dry Contact**, input IP3, Section 4.9.4), for example to limit the battery charge on the generator.
- Let the generator reach stable voltage and frequency before it feeds the UPS. The UPS stays on battery until the input is within range.

3.4 Heat, air and floor load

TABLE 3-2 Heat and floor load for each build, at full load

Build	Heat to remove	Weight with batteries	Floor load on the footprint	Load on each anchor bolt
30 kVA	1.25 kW · 4,270 BTU/h	2,190.5 lb (993.6 kg)	339 lb/ft² (1,656 kg/m²)	548 lb (248 kg)
60 kVA	2.5 kW · 8,530 BTU/h	2,241.2 lb (1,016.6 kg)	347 lb/ft² (1,694 kg/m²)	560 lb (254 kg)
90 kVA	3.75 kW · 12,800 BTU/h	2,291.9 lb (1,039.6 kg)	355 lb/ft² (1,733 kg/m²)	573 lb (260 kg)
120 kVA	5.0 kW · 17,060 BTU/h	2,342.6 lb (1,062.6 kg)	363 lb/ft² (1,771 kg/m²)	586 lb (266 kg)
150 kVA	6.25 kW · 21,330 BTU/h	2,393.3 lb (1,085.6 kg)	371 lb/ft² (1,809 kg/m²)	598 lb (271 kg)

All values in Table 3-2 are calculated, not measured:

- **Heat** = output kW × (1 ÷ efficiency − 1) × 3,412 BTU/h per kW, at output power factor 1 and the published 96 % efficiency. It is a lower bound: below full load the efficiency can be lower, and the battery recharge after an outage adds heat. Size the air conditioning with a margin.
- **Floor load** = weight ÷ footprint of 23.6 × 39.4 in (6.46 ft², 0.6 m²). The load on each of the four anchor bolts is a quarter of the weight, assuming an even share.
- **Not published: ask AEC.** The airflow of the cabinet (cfm), the measured losses, the position of the center of gravity, and any seismic qualification.

3.5 Data for the electrical engineer

TABLE 3-3 Data for the electrical engineer

Item	Value
Supply	Solidly grounded 480Y/277 V wye, 3 phases + N + PE, 60 Hz; main and bypass inputs on the same neutral. Not for high-resistance-grounded, ungrounded or corner-grounded delta sources (Section 4.7)
Output	480Y/277 V, 3 phases + N, 30 to 150 kVA, output power factor 1 (kVA = kW)
Currents	Max. input 45 A, rated output and bypass 36 A, per 30 kVA module: up to 225 A and 180 A at 150 kVA (Table 4-3)
Neutral	Rated 1.7 × the rated output current: up to 306 A at 150 kVA; not switched
Upstream breakers · conductors · EGC	Per build in Table 4-3, Table 4-4 and Table 4-5: NEC 125 %, 75 °C copper, Table 250.122
Short-circuit current rating (SCCR) / withstand	Not published: ask AEC
Maximum upstream breaker	Not published: ask AEC. Use the breakers of Table 4-3
Inverter fault current, bypass I^2t	Not published: ask AEC (needed for selective coordination)

Item	Value
Earth leakage current	Not published: ask AEC (needed for GFPE settings)
Breakers in the cabinet	Input, output, maintenance bypass (225 A, 3-pole) and battery; ratings of the input, output and battery breakers: ask AEC
Battery	240 × 12 V 9 Ah VRLA, 6 strings of 40, ±240 V DC nominal; 540 V DC float, 552 V DC boost, 588 V DC highest setting
Battery current	321 A at 480 V DC nominal (150 kVA); about 395 A at end of discharge, 150 kW (calculated)
Terminals	M10, two bolts per pole, crimped ring lugs, 133 lb-in (15 N·m); bottom cable entry only. Largest conductor and lug: ask AEC
Heat · air	Up to 21,330 BTU/h at 150 kVA (calculated, Table 3-2) · airflow: ask AEC
Weight · floor	Up to 2,393.3 lb (1,085.6 kg); 371 lb/ft² (1,809 kg/m²) (calculated)
Working space	NEC 110.26(A), front and rear: 3 / 3.5 / 4 ft for Conditions 1 / 2 / 3 (Section 4.3)
Standards	UL 1778 standard; FCC Part 15, Class A (Section 1.8)

04

CHAPTER 4

Installation

Unpacking and moving, the site and its working space, positioning, the modules and battery trays, protective devices, grounding and conductors for every build, the terminals, control cables and parallel systems.

DANGER

Only authorized engineers may install and commission the UPS. Do not apply power to the UPS before the commissioning engineer arrives at the site.

WARNING · Battery hazards

The internal battery strings are ±240 V DC (480 V DC end to end) and lethal. Wear eye protection, remove rings, watches and metal objects, use tools with insulated handles and rubber gloves.

4.1 Unpacking and moving

1. Check the packing for damage. If there is any, notify the carrier and AEC.
2. Move the crate to the site with a forklift rated for the weight: up to 2,400 lb (1,089 kg) with batteries (Table 2-2).
3. Open the top plate of the crate, then the side boards (Figure 4-1). Remove the protective foam.
4. Check the cabinet for damage and the contents against the packing list (Section 2.3).
5. Remove the bolts that hold the cabinet to the pallet and move the cabinet to its place with a pallet truck or forklift (it has no casters). Keep it upright; the center of gravity and the largest safe tilt are not published: ask AEC before you move it on a ramp.

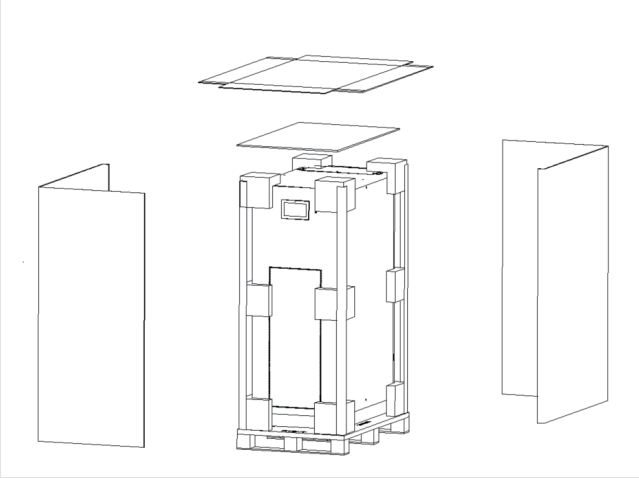

FIGURE 4-1 Opening the crate — top plate first, then the side boards

CAUTION

Move the cabinet carefully to avoid scratching it.

4.2 Site and environment

TABLE 4-1 Operating and storage environment

Item	Requirement
Location	Indoors; dry, clean, ventilated; away from water, heat sources, flammable, explosive or corrosive substances, conductive dust, salt air and direct sunlight
Operating temperature	32–104 °F (0–40 °C); 68–77 °F (20–25 °C) for maximum battery life
Humidity	0–95 % RH, non-condensing
Altitude	Full power up to 4,900 ft (1,500 m); from 4,900 to 6,560 ft (1,500–2,000 m) derate 1 % per 490 ft (150 m); above 6,560 ft (2,000 m) consult AEC
Protection · noise	IP20 · below 65 dB; 62 dB at 45 % load
Floor	Rated for up to 2,400 lb (1,089 kg); no vibration, less than 5° inclination
UPS storage and transport	−40 to 158 °F (−40 to 70 °C), indoors, dry
Battery storage	Dry, cool and ventilated; 68–77 °F (20–25 °C) is best. Recharge stored VRLA batteries as their maker requires

NOTICE

- The batteries give off small amounts of hydrogen and oxygen at the end of charging. Ventilate the room according to NFPA 70 Article 480 and IEEE 1635.
- Battery life halves for each 18 °F (10 °C) above 68 °F (20 °C); below 68 °F (20 °C) the capacity drops.

4.3 Working space and clearances

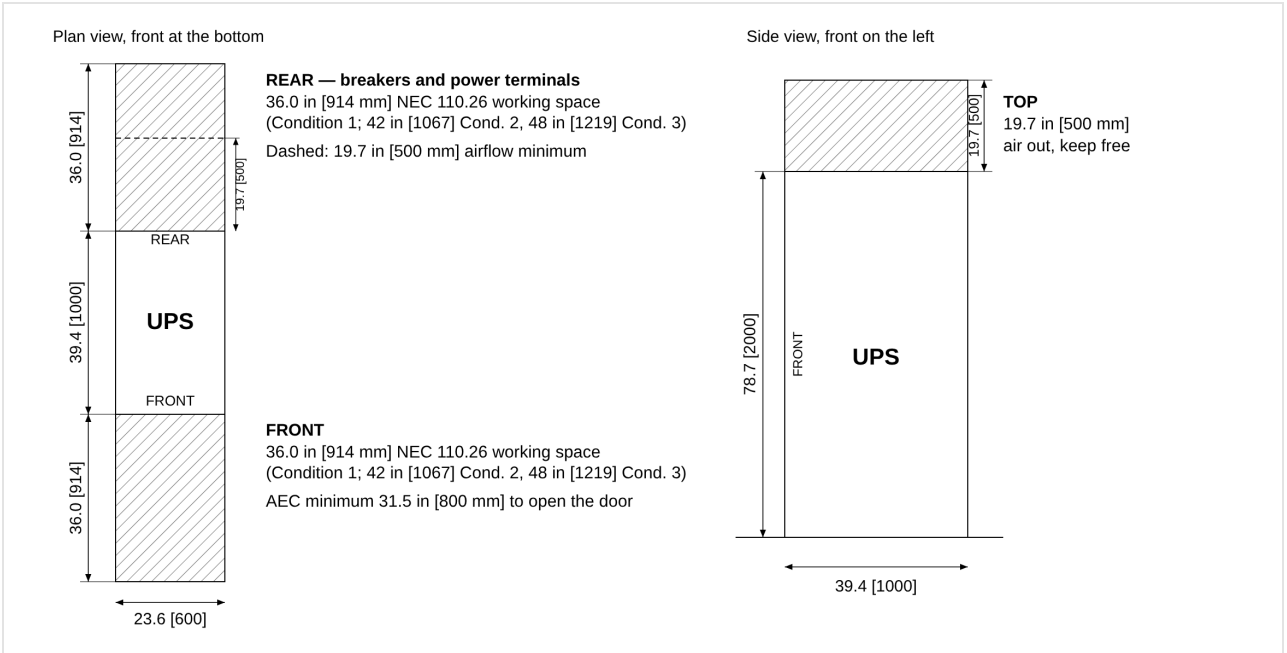

FIGURE 4-2 Working space and clearances, in inches [mm]: plan view (left) and side view (right); hatched areas keep free

The UPS is worked on from two sides: the modules and the touchscreen at the front, the four breakers and the power terminals at the rear. The breakers are operated while energized in the maintenance bypass procedures, so the NEC working space of 110.26(A) applies **at the front and at the rear**.

TABLE 4-2 Working space, NEC 110.26(A)(1) at 277 V to ground

Condition	Depth	When it applies
Condition 1	3 ft (914 mm)	Exposed live parts on one side; no live or grounded parts (or only insulated ones) on the other side
Condition 2	3.5 ft (1.07 m)	Exposed live parts on one side, grounded parts (for example a concrete, brick or tile wall) on the other
Condition 3	4 ft (1.22 m)	Exposed live parts on both sides, for example two cabinets facing each other

- **Front and rear:** the depth of Table 4-2, at least 30 in (762 mm) wide or the width of the equipment, whichever is greater, and 6.5 ft (2.0 m) high (NEC 110.26(A)(2), (A)(3)). The doors must open at least 90°. At the front AEC asks for at least 31.5 in (800 mm) to open the door and replace modules: the NEC depth is larger and governs.
- **Rear, for air only:** 19.7 in (500 mm) is the minimum for cooling. It is not enough to operate the breakers or reach the terminals while the UPS is energized.
- **Top:** at least 19.7 in (500 mm): the air leaves at the top and rear.
- **Sides:** no clearance is published; the cabinet can stand beside other cabinets.

4.4 Positioning the cabinet

The cabinet has no casters: it is moved with a pallet truck or forklift and stands on its four anchor bolts (leveling feet), which fix it in place.

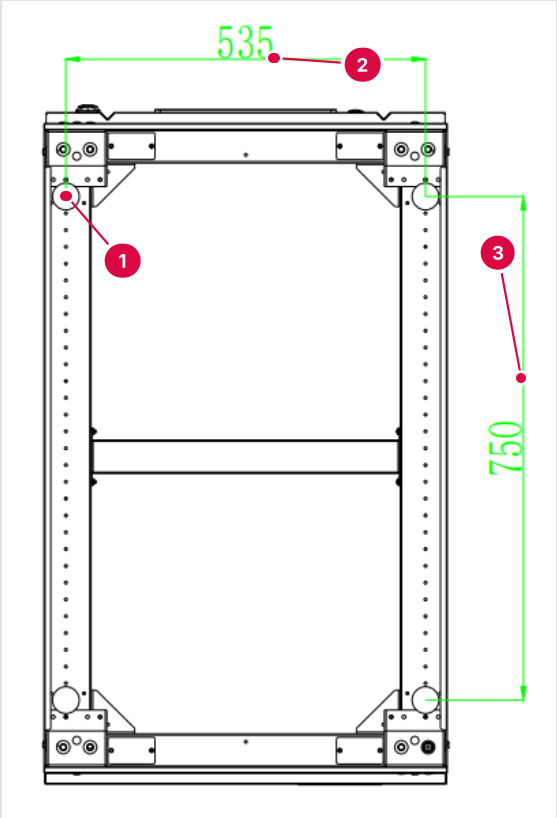

1	Support point (anchor bolt), one in each corner
2	21.1 in (535 mm) between centers
3	29.5 in (750 mm) between centers

FIGURE 4-3 Bottom view: support points 21.1 in (535 mm) apart side to side and 29.5 in (750 mm) front to back

1. Check that the anchor bolts are in good condition and that the floor is level, sound and strong enough.
2. Retract the anchor bolts: turn them counterclockwise with a wrench, so the pallet truck can set the cabinet down without catching them.
3. Set the cabinet down in its final place, over the floor opening for the cables.
4. Lower the anchor bolts: turn them clockwise until the cabinet rests on them.
5. Check that the four bolts are at the same height and the cabinet is level and does not move.

> ⚠ ***WARNING***
>
> The cabinet is heavy and tall. On a floor that is not strong enough, spread the load: lay steel plates or enlarge the support area of the anchor bolts. Install the modules and trays only after the cabinet is in its final place.

Floor load and seismic. The full 150 kVA cabinet puts about 371 lb/ft² (1,809 kg/m²) on its footprint and about 598 lb (271 kg) on each anchor bolt (calculated from the weight, evenly shared; Table 3-2 gives every build). The anchor bolts are leveling feet, not seismic anchors: no seismic anchoring kit or seismic qualification is published for this cabinet. In a seismic zone, ask AEC before you design the anchoring.

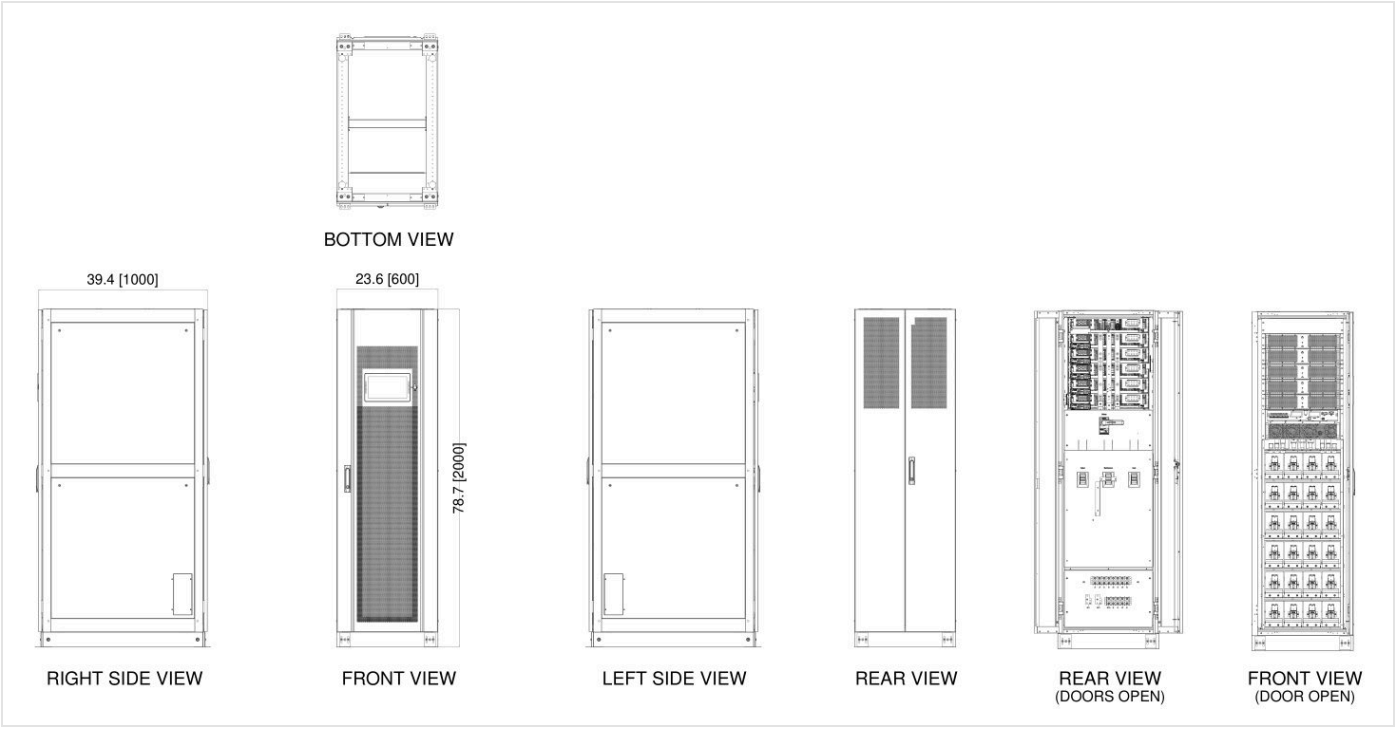

FIGURE 4-4 Appearance and dimensions, in inches [mm]: right side, front, left side, rear, rear with the doors open, front with the door open, bottom and top (150 kVA cabinet)

4.5 Installing power modules and battery trays

1. Remove the slot covers for the number of modules ordered.
2. Insert the modules from the bottom slot upward (No. 1 at the bottom, Figure 2-3), to keep the center of gravity low.
3. Push each module fully in and tighten the fixing screws on both sides (Figure 2-8, item 6). Leave the empty slots closed.
4. Slide the 24 battery trays into their places (Figure 2-3, item 5).
5. Connect the trays string by string, four trays per string (Figure 2-10): connect each tray with its Anderson connector (Figure 2-9, item 1), then the BAT+, N and BAT– cables of each string to the battery busbar.
6. Before you connect to the main circuit, check the polarity and measure the voltage of each string: about 480 V DC between BAT+ and BAT–, about 240 V DC from each end to N.

⚠ *DANGER*

The string voltage is ±240 V DC. Make sure +, N and – are connected correctly from the trays to the busbar and the battery breaker, and from the breaker to the UPS. Keep the battery breaker open until the commissioning engineer closes it.

i NOTE If the UPS is installed as a stand-alone unit in a damp room, AEC recommends fitting the modules from the top slot downward, to protect the bottom module from corrosion. Remove modules from the top down in any case (Section 5.9).

4.6 External protective devices

Install breakers upstream of the UPS in the distribution panel. Size them for your build with Table 4-3.

- **Continuous load.** The UPS runs for hours at full current: it is a continuous load. Every overcurrent device is at least **125 % of the continuous current** (NEC 210.20(A) for a branch circuit, 215.3 for a feeder), rounded up to the next standard rating (NEC 240.6(A)). Table 4-3 shows the result. A breaker listed for 100 % continuous operation may be sized at 100 % of the current, with conductors to match; the table uses standard (80 %-rated) breakers.
- **Bypass input.** The bypass input has no breaker in the cabinet. With a single feed (copper link fitted) the main input breaker feeds both inputs. With a separate bypass feed, the main input and the bypass input each need their own breaker, fed from sources with the same neutral.
- **Poles.** Use 3-pole breakers upstream; the neutral is not switched.
- **External maintenance bypass.** For service with the whole cabinet isolated, provide an external maintenance bypass (Section 5.6). Its breaker is 3-pole and sized as the bypass/output breaker of the final build (225 A at 150 kVA). Feed it from its own breaker, not from the UPS input breaker, so that the UPS can be isolated while the load runs on it. A key interlock (Kirk-key type) between the external maintenance bypass breaker and the UPS output breaker prevents closing them out of sequence.
- **Selective coordination.** Where the UPS feeds emergency, legally required standby or critical operations power loads, the overcurrent devices must be selectively coordinated (NEC 700.32, 701.32, 708.54). The trip-unit settings and the inverter fault current needed for the study are not published: ask AEC.
- **Later growth.** If you plan to add modules later, size the breakers and conductors for the final build.

TABLE 4-3 Currents and external breakers for each build — 480 V

Build	Modules	Max. input current	Rated bypass / output current	Max. battery current	Main input breaker	Bypass / output breaker	Battery breaker (DC)
30 kVA	1	45 A	36 A	64 A	60 A	45 A	90 A
60 kVA	2	90 A	72 A	128 A	125 A	90 A	175 A
90 kVA	3	135 A	108 A	187 A	175 A	150 A	250 A
120 kVA	4	180 A	144 A	257 A	225 A	200 A	350 A
150 kVA	5	225 A	180 A	321 A	300 A	225 A	450 A

How the table is built:

- **Currents** at 480 V rated line voltage. The 90 and 150 kVA currents are published data; the 30, 60 and 120 kVA currents are scaled per module (45 A input, 36 A bypass and output, 64.2 A battery per 30 kVA module: calculated). The battery current is at the nominal 480 V DC. At the end of discharge (1.65 V/cell, 396 V DC) a 150 kW load draws about 395 A (calculated: 150 kW ÷ 0.96 ÷ 396 V).
- **Breakers:** 125 % of the current, next standard rating. Example, 150 kVA: input 225 A × 1.25 = 281 A → 300 A; output 180 A × 1.25 = 225 A → 225 A; battery 321 A × 1.25 = 401 A → 450 A.
- **The maintenance bypass breaker** in the cabinet is 225 A, 3-pole. The ratings of the cabinet's input, output and battery breakers are not published: ask AEC.

Battery (DC) circuit. The 240 blocks and the battery breaker are inside the cabinet: no external DC circuit is needed. The battery breaker column applies only where AEC specifies an external DC circuit on the BATT terminals (Section 4.8.1). Such a circuit follows NEC Article 480 and Article 240:

- **Voltage rating.** The DC breaker or fused disconnect is listed for DC at a voltage above the highest charge voltage: 588 V DC (2.45 V/cell × 240 cells, the highest boost setting; the menu stops below 2.5 V/cell, 600 V). A 600 V DC rated device and 600 V conductor insulation are therefore enough. Never set float or boost above 2.45 V/cell.
- **Current rating.** AEC sizes it like the AC breakers, at 125 % of the maximum battery current (conservative: the internal battery runs for minutes, well under the 3 hours that make a load continuous).
- **Interrupting rating.** At least the short-circuit current of the battery, from the block maker's data.
- **Disconnect.** A disconnect within sight of the battery, or lockable (NEC 480.7).

4.7 Ground-fault protection, grounding and source types

Supply. The UPS needs a **solidly grounded 480Y/277 V wye** source, 3 phases + neutral + PE, with the same neutral for the main input and the bypass input. It is not for high-resistance-grounded, ungrounded or corner-grounded delta sources: it needs the neutral.

Neutral and grounding. The neutral runs through the UPS from the input to the output and is not switched: the UPS is not a separately derived system. Keep the neutral-to-ground bond at the service or at the transformer that feeds the UPS. Do not bond the neutral to ground at the UPS or in the panel it feeds (NEC 250.24(A)(5), 250.142(B)). If a transformer downstream of the UPS makes a new separately derived system, bond and ground it there (NEC 250.30). Run the equipment grounding conductor with the phase conductors in every raceway (NEC 250.122(F) for parallel runs); do not use the raceway as the only grounding path.

Ground-fault protection. Residual-current devices (RCD/GFCI type) are not recommended on the UPS feeds: the leakage current of the UPS filters and of the load can trip them. The NEC requires ground-fault protection of equipment (GFPE) on service and feeder disconnects rated 1,000 A or more on solidly grounded wye systems above 150 V to ground, such as 480Y/277 V (NEC 230.95, 215.10, 240.13). The UPS feeders here (60 to 300 A) are below that, but the switchgear upstream may have GFPE. Where it does:

- set its time delay to at least 0.2 s, so that transfers between inverter and bypass do not trip it;
- set its pickup above the leakage current of the UPS and its loads (the UPS leakage current is not published: ask AEC);
- on this 4-wire system, use a scheme that senses the neutral (4-pole breaker or a neutral sensor), and coordinate it with the breakers downstream.

Battery and ground. The battery neutral (BATT N) is drawn from the midpoint of the strings. Whether it is tied to the AC neutral inside the cabinet, and whether the UPS detects a battery ground fault, are not published: ask AEC. Until then, treat each end of the battery as up to 294 V DC to ground.

Marking. Field-mark the UPS with an arc-flash warning label (NEC 110.16(A)). Where the upstream switchboard is service equipment it carries the available fault current (NEC 110.24); record that value at the UPS and check it against the short-circuit current rating of the UPS (NEC 110.10). The SCCR is not published: ask AEC before you connect the UPS to a source with a high available fault current.

4.8 Power cables

⚠ DANGER

Failure to follow adequate grounding procedures can result in electric shock or fire. Connect the protective earth (PE) first.

TABLE 4-4 Minimum copper conductors for each build — 75 °C, NEC Table 310.16

Build	Main input A, B, C	Bypass input and output A, B, C	Neutral: mN, bN, oN	Battery +, N, – (external DC circuit only)
30 kVA	6 AWG [13.3 mm²]	8 AWG [8.4 mm²]	6 AWG [13.3 mm²]	3 AWG [26.7 mm²]
60 kVA	1 AWG [42.4 mm²]	3 AWG [26.7 mm²]	1 AWG [42.4 mm²]	2/0 AWG [67.4 mm²]
90 kVA	2/0 AWG [67.4 mm²]	1/0 AWG [53.5 mm²]	3/0 AWG [85 mm²]	250 kcmil [127 mm²]
120 kVA	4/0 AWG [107 mm²]	3/0 AWG [85 mm²]	250 kcmil [127 mm²]	500 kcmil or 2 × 3/0 AWG [253 or 2 × 85 mm²]
150 kVA	350 kcmil [177 mm²]	4/0 AWG [107 mm²]	350 kcmil [177 mm²]	2 × 4/0 AWG [2 × 107 mm²]

TABLE 4-5 Minimum equipment grounding conductors (EGC), copper — NEC Table 250.122

Build	Main input (breaker in Table 4-3)	Bypass input · output	Battery DC (external circuit only)
30 kVA	10 AWG [5.3 mm²] (60 A)	10 AWG [5.3 mm²] (45 A)	8 AWG [8.4 mm²] (90 A)
60 kVA	6 AWG [13.3 mm²] (125 A)	8 AWG [8.4 mm²] (90 A)	6 AWG [13.3 mm²] (175 A)
90 kVA	6 AWG [13.3 mm²] (175 A)	6 AWG [13.3 mm²] (150 A)	4 AWG [21.2 mm²] (250 A)
120 kVA	4 AWG [21.2 mm²] (225 A)	6 AWG [13.3 mm²] (200 A)	3 AWG [26.7 mm²] (350 A)
150 kVA	4 AWG [21.2 mm²] (300 A)	4 AWG [21.2 mm²] (225 A)	2 AWG [33.6 mm²] (450 A)

How the conductors are sized:

- **Phases and battery:** copper, 75 °C column of NEC Table 310.16 (the terminals are rated 75 °C, NEC 110.14(C)). Each conductor's ampacity is at least the rating of its breaker in Table 4-3, so it is protected under NEC 240.4 without the next-size-up rule of 240.4(B), and it is at least 125 % of the continuous current (NEC 210.19(A)(1), 215.2(A)(1)). Example, 150 kVA input: 300 A breaker → 350 kcmil, 310 A. (Under 240.4(B) the engineer of record may choose 300 kcmil, 285 A, with the 300 A breaker; this manual does not.)
- **Parallel sets** are 1/0 AWG or larger, of the same length, material and size (NEC 310.10(G)). Run each set in its own raceway with its own full-size EGC from Table 4-5 (NEC 250.122(F)).
- **Neutral:** the neutral is rated 1.7 × the rated output current, for mainly non-linear loads (IT loads, drives, LED lighting): 61 / 122 / 184 / 245 / 306 A for 30 to 150 kVA. It carries no overcurrent device, so it is sized at 100 % of that current (NEC 215.2(A)(2)). One size serves every neutral of the build (main input, bypass input, output). For mainly linear loads the neutral can be the size of the phase conductors of its circuit, never smaller.
- **Neutral as a current-carrying conductor.** With mainly non-linear loads the neutral counts as a current-carrying conductor (NEC 310.15(E)(3)): a 4-wire raceway then holds four, and the ampacity of every conductor in it is adjusted to 80 % (NEC 310.15(C)(1)). The tables assume up to three current-carrying conductors per raceway and 86 °F (30 °C). For the adjustment use 90 °C insulation (THHN/THWN-2 or XHHW-2): adjust the 90 °C ampacity, and keep the result no higher than the 75 °C ampacity (NEC 110.14(C)).
- **EGC:** sized by NEC Table 250.122 from the rating of the breaker that protects the circuit (in brackets). If the phase conductors are made larger for voltage drop, increase the EGC in proportion (NEC 250.122(B)).
- **Voltage drop:** keep it below 3 % on AC runs and 1 % on DC runs. AC runs longer than about 164 ft (50 m) and DC runs longer than about 98 ft (30 m) need larger conductors.
- **Final sizing** for the ambient, the raceway fill and the run length is by the electrical engineer of record.

Terminals. All terminals take M10 bolts, two per pole: torque 133 lb-in (15 N·m). Use crimped ring (OT) lugs on all terminals.

4.8.1 Terminal block and wire order

Open the rear doors and remove the lower cover to reach the terminals (Figure 2-4, item 6).

The terminals sit at the bottom of the rear compartment, 11 to 17 in (270 to 420 mm) above the floor, under the breaker panel (Figure 4-5). Figure 4-6 numbers every terminal, and Table 4-6 gives the bolt, torque and conductor data.

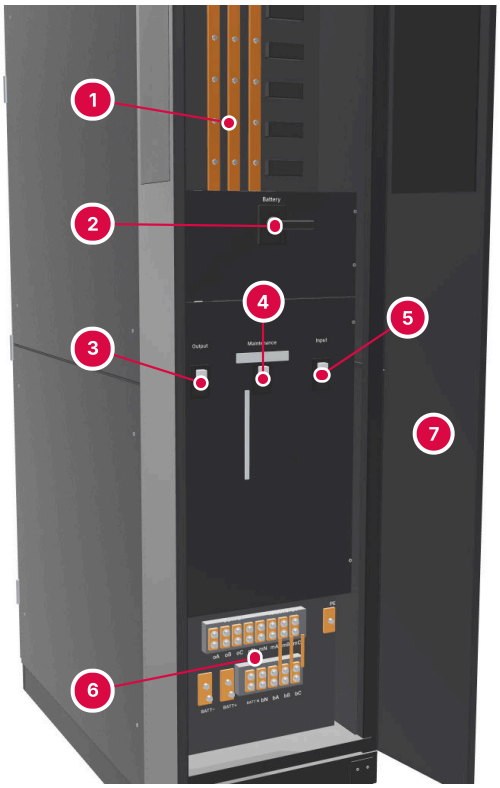

1. Module backplane: copper bars joining the modules
2. Battery breaker
3. Output breaker
4. Maintenance bypass breaker
5. Input breaker
6. Power terminals (Figure 4-6)
7. Rear door, open

FIGURE 4-5 Rear of the 150 kVA cabinet, rear doors open, terminal cover removed (3D render) — illustration

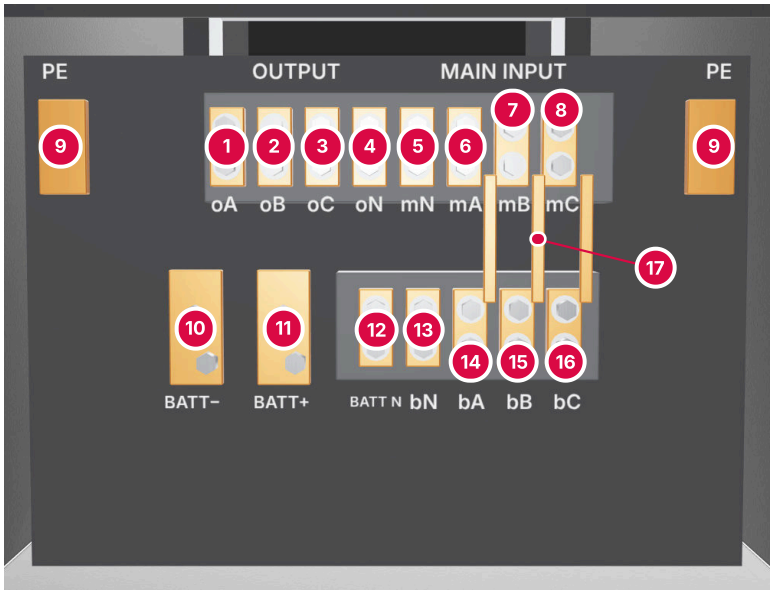

1. **oA** — output L1
2. **oB** — output L2
3. **oC** — output L3
4. **oN** — output neutral
5. **mN** — main input neutral
6. **mA** — main input L1
7. **mB** — main input L2
8. **mC** — main input L3
9. **PE**, two places: connect first
10. **BATT –** — battery negative
11. **BATT +** — battery positive
12. **BATT N** — battery neutral
13. **bN** — bypass input neutral
14. **bA** — bypass input L1
15. **bB** — bypass input L2
16. **bC** — bypass input L3
17. Copper links, main input to bypass input (as delivered)

FIGURE 4-6 Power terminals, rear view, cover removed (3D render) — markings as on the cabinet, phase order left to right

TABLE 4-6 Terminal data

Terminals (items in Figure 4-6)	Bolt	Torque	Wire, min. (Table 4-4, 30 to 150 kVA)	Wire, max.	Lug
Output oA, oB, oC, oN (1–4)	M10, two per pole	133 lb-in (15 N·m)	Phases 8 AWG [8.4 mm²] to 4/0 AWG [107 mm²]; oN 6 AWG [13.3 mm²] to 350 kcmil [177 mm²]	ask AEC	Crimped ring (OT), M10
Main input mN, mA, mB, mC (5–8)	M10, two per pole	133 lb-in (15 N·m)	6 AWG [13.3 mm²] to 350 kcmil [177 mm²]	ask AEC	Crimped ring (OT), M10
PE, two places (9)	M10	133 lb-in (15 N·m)	10 AWG [5.3 mm²] to 4 AWG [21.2 mm²] (Table 4-5); several EGCs per bolt	ask AEC	Crimped ring (OT), M10
Battery BATT –, BATT +, BATT N (10–12)	M10	133 lb-in (15 N·m)	3 AWG [26.7 mm²] to 2 × 4/0 AWG [2 × 107 mm²]	ask AEC	Crimped ring (OT), M10

Terminals (items in Figure 4-6)	Bolt	Torque	Wire, min. (Table 4-4, 30 to 150 kVA)	Wire, max.	Lug
Bypass input bN, bA, bB, bC (13–16)	M10, two per pole	133 lb-in (15 N·m)	Phases 8 AWG [8.4 mm²] to 4/0 AWG [107 mm²]; bN 6 AWG [13.3 mm²] to 350 kcmil [177 mm²]	ask AEC	Crimped ring (OT), M10

The minimum conductor depends on the build: take the row of your build in Table 4-4 and Table 4-5. The largest conductor and lug the terminals accept, the bus-bar hole spacing and whether a 2-hole lug fits are not published: ask AEC before you plan conductors larger than the minimum or parallel sets. The torque, 133 lb-in (15 N·m), is the published value for these terminals; it is lower than the usual torque for an M10 bolt on a copper bar, so use exactly this value and re-check it at the yearly inspection. The battery terminals are used only for a DC circuit specified by AEC (Table 4-7).

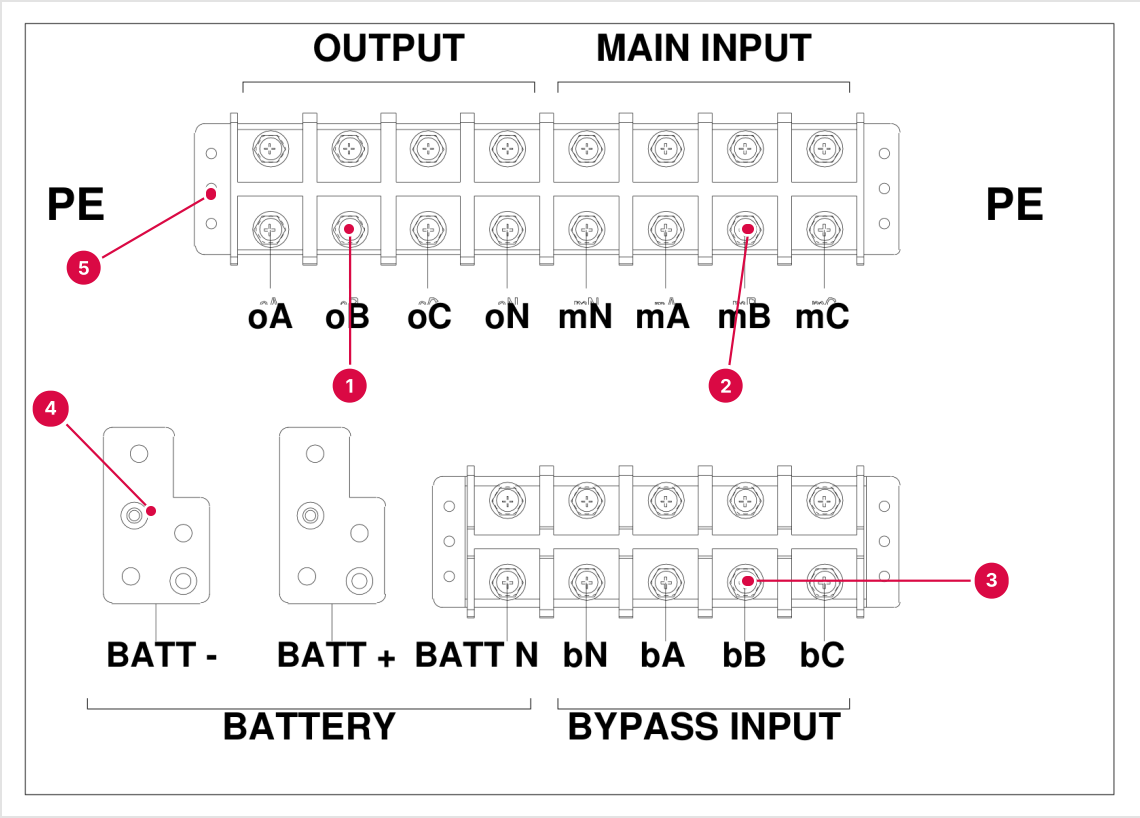

1. **Output** — oA, oB, oC, oN: to the load panel
2. **Main input** — mA, mB, mC, mN: utility L1, L2, L3 and neutral to the rectifiers
3. **Bypass input** — bA, bB, bC, bN: bypass supply L1, L2, L3 and neutral
4. **Battery** — BATT –, BATT +, BATT N
5. **PE** — protective earth, two places (left and right of the upper bar): connect first

FIGURE 4-7 Power terminals, rear view with the cover removed — two bolts per pole

TABLE 4-7 Wire order

Terminal group	Marking, left to right	Notes
Output	oA (L1) · oB (L2) · oC (L3) · oN	480 V line to line, 277 V line to neutral.
Main input	mN · mA (L1) · mB (L2) · mC (L3)	4-wire: the neutral mN is required. Clockwise phase rotation A-B-C.
Bypass input	bN · bA (L1) · bB (L2) · bC (L3)	Same phase rotation as the main input, or the UPS alarms Bypass Sequence Error. Same neutral as the main input.
Battery	BATT – · BATT + · BATT N	The internal trays connect to the battery busbar through the battery breaker. Use these terminals only for a DC circuit specified by AEC; check polarity with a voltmeter.
PE	PE · PE	Protective earth, first on and last off.

Cable entry. Cables enter from the bottom only: they come up through the plinth to the terminals at the rear (Figure 4-8); the roof has no cable entry. Plan the floor opening or trench under the cabinet before it is set down. Fix the cables so the air path stays clear, and close any remaining opening against rodents.

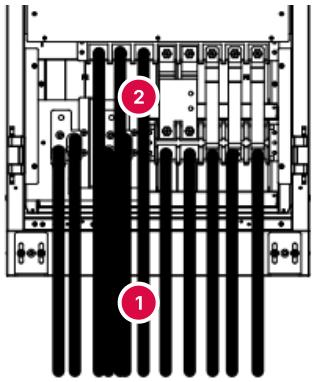

1. Power cables from the bottom to the terminals
2. Terminal area

FIGURE 4-8 Bottom cable entry, rear view: the power cables come up to the terminal area

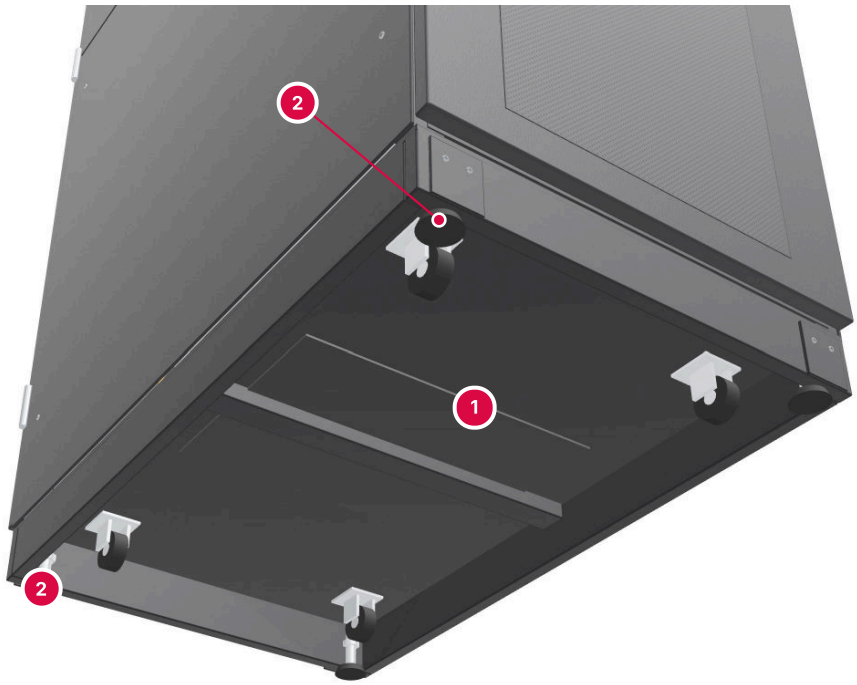

1. Bottom cable entry (opening in the base)
2. Anchor bolts, four: the cabinet stands on them

FIGURE 4-9 Underside of the cabinet (3D render) — illustration; ask AEC for the size of the bottom entry

Connection sequence

1. Open every external breaker, and open all four breakers in the cabinet — **Battery**, **Output**, **Maintenance** and **Input** (Figure 5-1, state A). Lock them out and hang warning signs on them.
2. Open the rear doors and remove the cover over the terminals.

3. Connect the protective earth (PE) conductors to the PE terminals (Figure 4-7, item 5).
4. Connect the main input cables to mA, mB, mC and mN (the input neutral is required: the UPS does not run from a 3-wire supply) and the load cables to oA, oB, oC, oN. For a separate bypass feed, first remove the copper link between the main input and the bypass input, then connect the bypass cables to bA, bB, bC, bN.
5. Connect battery cables to BATT +, BATT – and BATT N only if AEC has specified an external DC circuit for the system.
6. Tighten every lug to 133 lb-in (15 N·m), check the phase rotation and the wiring, then refit all covers.

> ⚠ **CAUTION**
>
> Only authorized electricians or qualified technical personnel may make these connections. If you have any difficulty, call AEC service.

4.9 Control and communication cables

The communication panel is on the front of the bypass & monitoring module (Figure 2-3, item 3). It holds the dry contacts, the red cold-start button, the SNMP slot, the intelligent slot, RS-232, RS-485, USB and the touchscreen port.

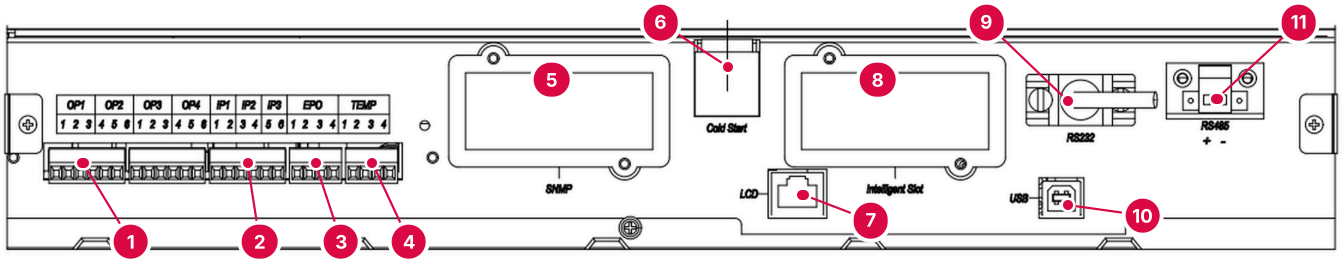

1. OP1 · OP2 · OP3 · OP4: alarm relays and battery breaker trip
2. IP1 · IP2 · IP3: BCB status, BCB online, generator input
3. EPO: remote emergency power off input
4. TEMP: ambient and battery temperature sensors
5. SNMP slot: SNMP-M network card
6. Red cold-start button (battery start, hold 3 s)
7. LCD: cable to the touchscreen (RJ45) — not a network port
8. Intelligent slot: dry-contact card
9. RS-232 port (DB9)
10. USB port
11. RS-485 port (terminal, + and –)

FIGURE 4-10 Communication panel on the front of the bypass & monitoring module

The panel sits on the front of the bypass & monitoring module, between the power modules and the battery connection row (Figure 4-11). Open the front door to reach it.

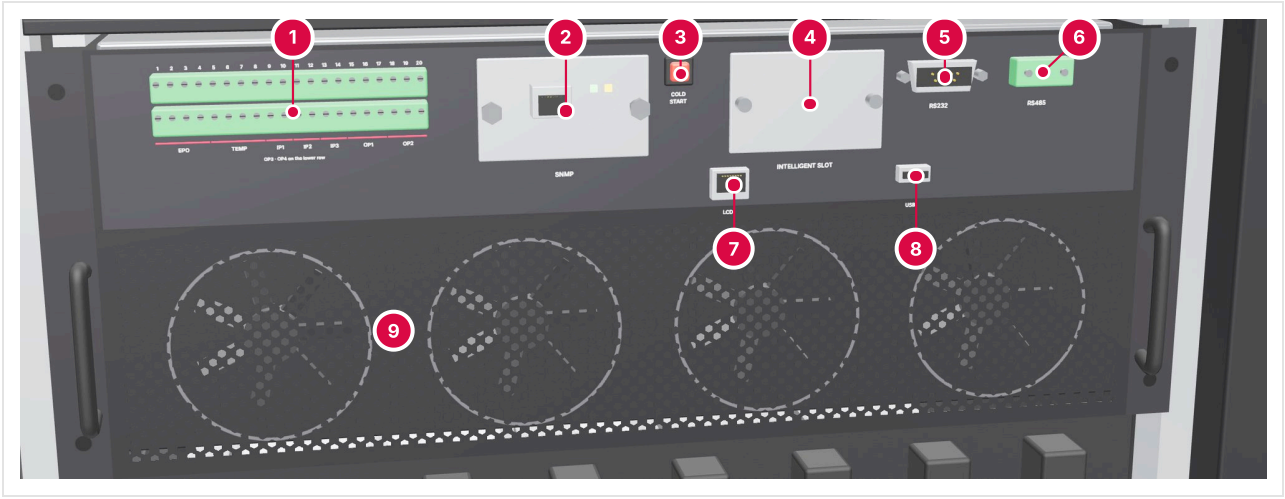

1. Dry contacts: EPO, TEMP, IP1–IP3, OP1–OP4 (Table 4-8)
2. SNMP slot, SNMP-M card fitted
3. Red cold-start button
4. Intelligent slot
5. RS-232 port (DB9)
6. RS-485 port
7. LCD: cable to the touchscreen (RJ45)
8. USB port
9. Bypass & monitoring module: fans

FIGURE 4-11 Communication panel in the cabinet, door open (3D render) — illustration; the dry-contact terminal order is in the photo above

Signal cables must be shielded and double insulated, 20–16 AWG (0.5–1.5 mm²), no longer than 82–164 ft (25–50 m), and run apart from the power cables.

4.9.1 Dry contacts

The dry-contact terminals have five groups. The functions in Table 4-8 are the factory defaults; the inputs and outputs can be set to other functions in **Set › Dry Contact** (Figure 6-12) or with the monitoring software.

TABLE 4-8 Dry contacts

Terminal	Signal	Function (default)
EPO-1	REMOTE EPO NO	EPO when shorted to EPO-2
EPO-2 · EPO-3	+24V DRY	+24 V
EPO-4	REMOTE EPO NC	EPO when disconnected from EPO-3
TEMP-1	ENV TEMP	Ambient temperature sensor
TEMP-2 · TEMP-3	TEMP COM	Temperature sensor common
TEMP-4	BAT TEMP	Battery temperature sensor
IP1-1 · IP1-2	BCB STATUS · GND	Battery breaker status (normally-open auxiliary contact). If BCB status is not valid, the UPS reports the battery as not connected.
IP2-3 · IP2-4	BCB ONLINE · GND	Battery breaker online (normally-open auxiliary contact)
IP3-5 · IP3-6	GEN CONNECTED · +24V	Generator connected (input)
OP1-1 · OP1-2 · OP1-3	BAT LOW NC · NO · common	Battery low alarm relay

Terminal	Signal	Function (default)
OP2-4 · OP2-5 · OP2-6	GENERAL ALARM NC · NO · common	General alarm relay
OP3-1 · OP3-2 · OP3-3	UTILITY FAIL NC · NO · common	Utility failure alarm relay
OP4-4 · OP4-5 · OP4-6	BCB DRV · GND · +24V	Battery breaker trip output, +24 V, max. 150 mA (at end of discharge or EPO)

A relay NC contact opens when the alarm occurs; the NO contact closes.

4.9.2 Remote EPO

In normal operation EPO-3 and EPO-4 are linked and EPO-1 and EPO-2 are open. Opening EPO-3/EPO-4, or closing EPO-1/EPO-2, triggers the emergency power off. Use a voltage-free normally-open or normally-closed switch.

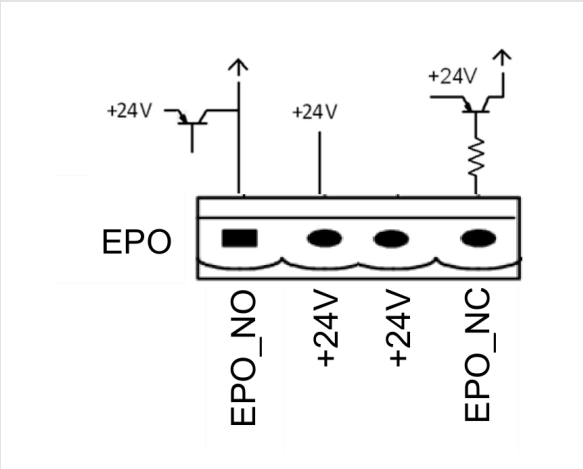

FIGURE 4-12 Remote EPO terminal EPO-1 to EPO-4

4.9.3 Temperature sensors

TEMP-1 and TEMP-4 take the ambient and the battery temperature sensor; TEMP-2 and TEMP-3 are their common. The battery sensor drives the charge temperature compensation. The sensors are specific to the UPS and optional: order them from AEC.

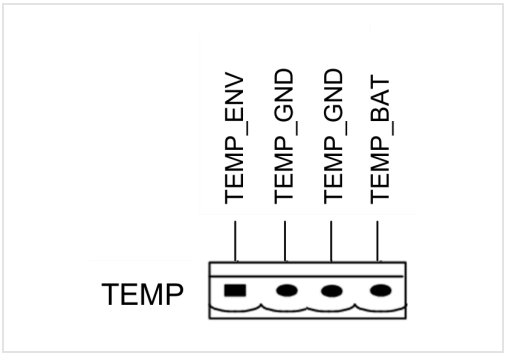

FIGURE 4-13 Temperature sensor terminal TEMP-1 to TEMP-4

4.9.4 Generator input

Wire a normally-open auxiliary contact of the generator between IP3-5 (GEN CONNECTED) and IP3-6 (+24 V). The contact closes when the generator feeds the UPS.

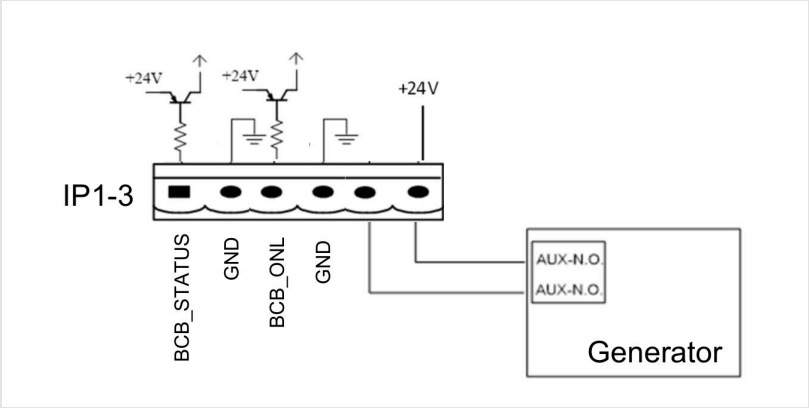

FIGURE 4-14 Generator contact on IP3-5 and IP3-6

4.9.5 Battery breaker interface (BCB)

IP1 and IP2 read the auxiliary contacts of a battery breaker; OP4-4 (BCB DRV, +24 V, max. 150 mA) trips it at end of discharge or on EPO. Connect OP4-4 and OP4-6 to the breaker's trip coil.

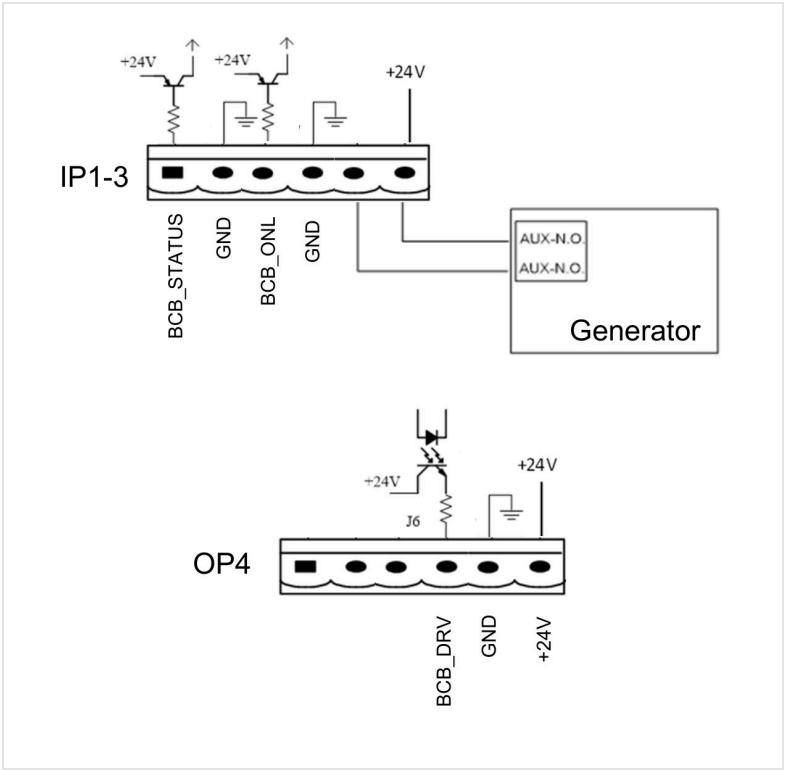

FIGURE 4-15 BCB interface: IP1 BCB_STATUS · GND, IP2 BCB_ONL · GND (top), OP4 BCB_DRV · GND · +24V (bottom)

4.9.6 Alarm relays

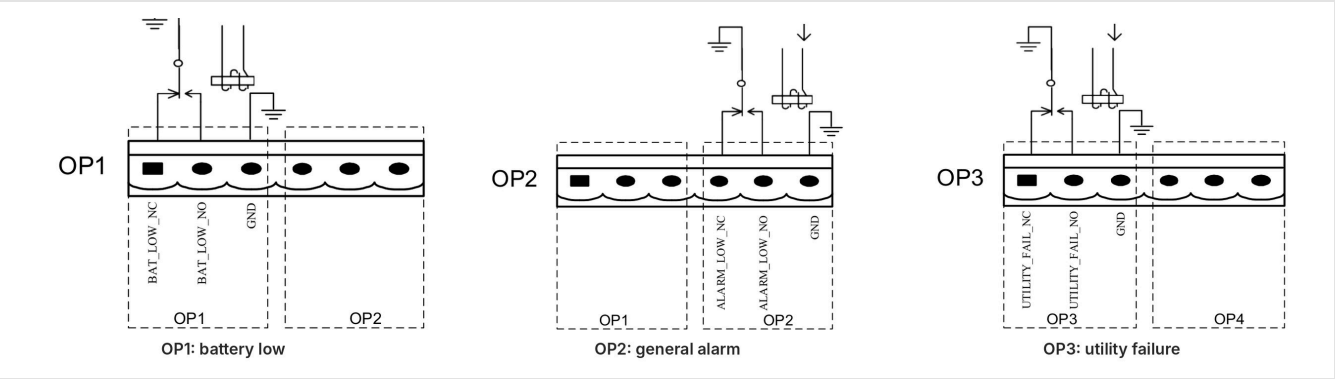

FIGURE 4-16 Alarm relays OP1 (battery low, OP1-1 to OP1-3), OP2 (general alarm, OP2-4 to OP2-6) and OP3 (utility failure, OP3-1 to OP3-3)

- **OP1, battery low:** before the UPS alarms Battery Volt Low, OP1-1 and OP1-3 are closed and OP1-2 and OP1-3 open; at the alarm the relay changes over.
- **OP2, general alarm:** changes over when one or more warnings are active.
- **OP3, utility failure:** changes over when the utility fails.

4.9.7 Serial ports and cards

- **RS-232** (Figure 4-10, item 9): to a PC with UPS View, or to a building system (Modbus). Pin 2 TXD, pin 3 RXD, pin 5 GND.
- **RS-485** (item 11) and **USB** (item 10): Modbus or UPS View; they share one setting in **Set › Comm Set**.
- **SNMP slot** (item 5): the SNMP-M network card (Section 8.1).
- **Intelligent slot** (item 8): the dry-contact card, for more relay outputs.
- **AS400 interface** (option): relay signals for IBM AS/400 hosts. Ask AEC when you order.

4.10 Parallel system

Up to three CIRRO-IB cabinets run in parallel, for more power or for redundancy. The parallel function is an option: confirm it with AEC when you order.

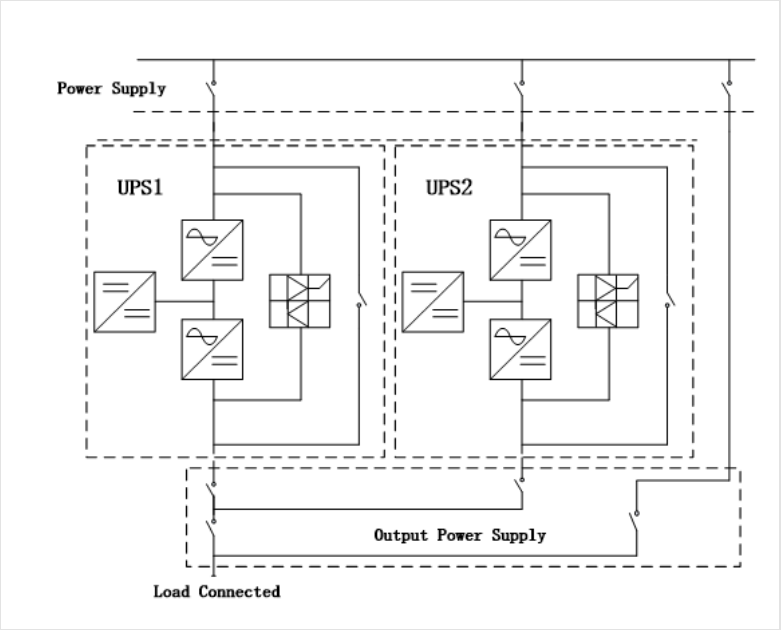

FIGURE 4-17 Parallel structure — common input, common output bus

- Feed all cabinets from the same source and connect the outputs to a common output bus. Main and bypass inputs must share the same neutral.
- Keep the input and output cables of all cabinets of the same length and size, so that the load shares equally in bypass mode.
- Provide an external maintenance bypass for the whole system, so that each cabinet can be isolated.
- Connect the parallel ports with the parallel cables in a closed ring through every cabinet.
- Set the system mode and the IDs on each cabinet as described in Appendix A.

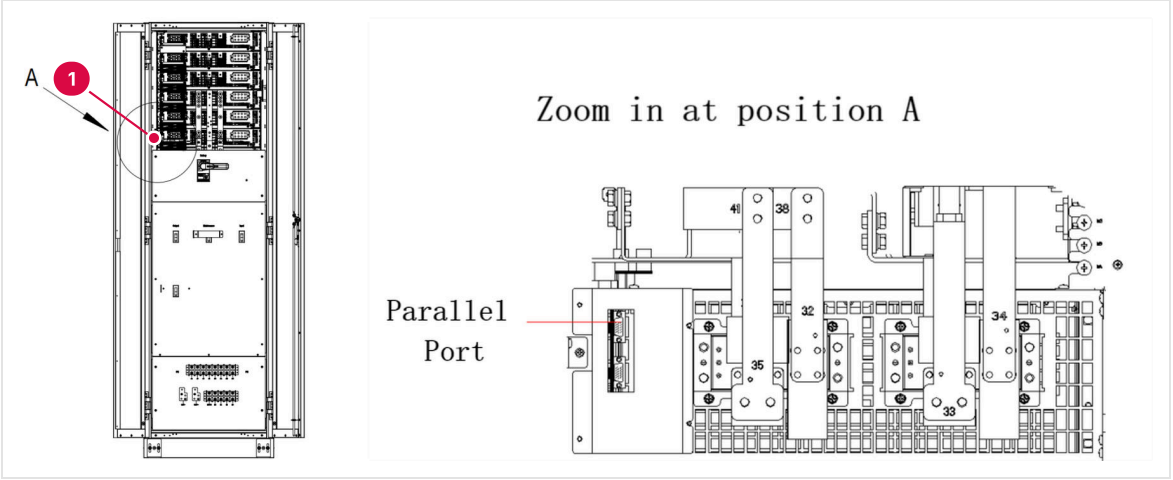

1 Position A: parallel ports

FIGURE 4-18 Parallel ports at position A, rear of the cabinet (left), and the ports in detail (right)

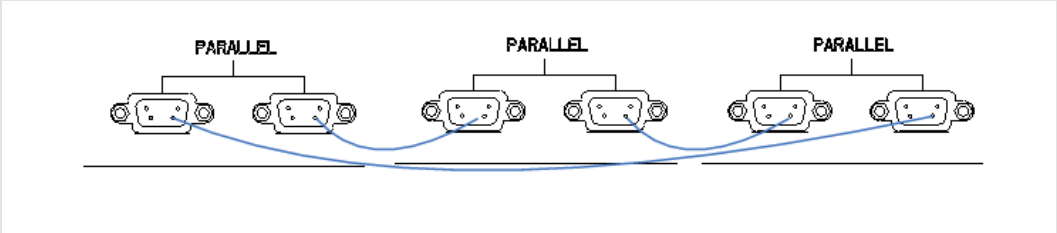

FIGURE 4-19 Parallel cables connected in a closed ring through three cabinets

4.11 Installation checklist

- ☐ The cabinet stands level on its four anchor bolts, with the working space of Section 4.3.
- ☐ The power modules are fitted from the bottom slot up; empty slots are closed.
- ☐ 24 battery trays fitted and connected string by string; polarity and string voltage checked; the battery breaker stays open.
- ☐ Upstream breakers, conductors, neutral and EGC match Table 4-3, Table 4-4 and Table 4-5 for the final build; PE connected first; torque 133 lb-in; copper link removed only for a separate bypass feed.
- ☐ Source solidly grounded 480Y/277 V; no neutral-to-ground bond at the UPS; any upstream GFPE set to at least 0.2 s (Section 4.7).
- ☐ NEC working space at the front and the rear; arc-flash label fitted (Section 4.3, Section 1.4).
- ☐ Phase rotation of main and bypass input checked.
- ☐ EPO, sensors, dry contacts, network card and (parallel systems) parallel cables connected.
- ☐ The commissioning engineer is booked: power is applied only in his presence.

CHAPTER 5

05 Operation

Starting, stopping and transferring the UPS, the maintenance bypass, EPO, replacing a power module and the battery test — with the breaker positions for each step.

DANGER

Hazardous utility and battery voltage is present behind the protective covers. Only qualified service personnel may remove them.

5.1 Operation at a glance

TABLE 5-1 Operation at a glance

To	Do this
Start from fully off	Close the Output and Input breakers and the external breakers; the UPS goes to inverter by itself; close the Battery breaker (Section 5.2)
Start without utility (cold start)	Red cold-start button on the bypass & monitoring module for 3 s, then the Cold Start pinhole of a power module (Section 5.3)
Load to bypass and back	**Control › Function › Manual Bypass**, then **Ecs Manual Bypass** (Section 5.4)
Service the power modules with the load on	Maintenance bypass (Section 5.5)
Service the bypass & monitoring module	External maintenance bypass, AEC service only (Section 5.6)
Switch everything off	Loads off, then the Battery, Input and external breakers (Section 5.7)
Emergency	EPO button (Section 5.8)

5.1.1 Breaker positions

The procedures refer to these breaker states of the rear breaker panel (Figure 2-5). The external breakers (main input, bypass input, output) are given in the text.

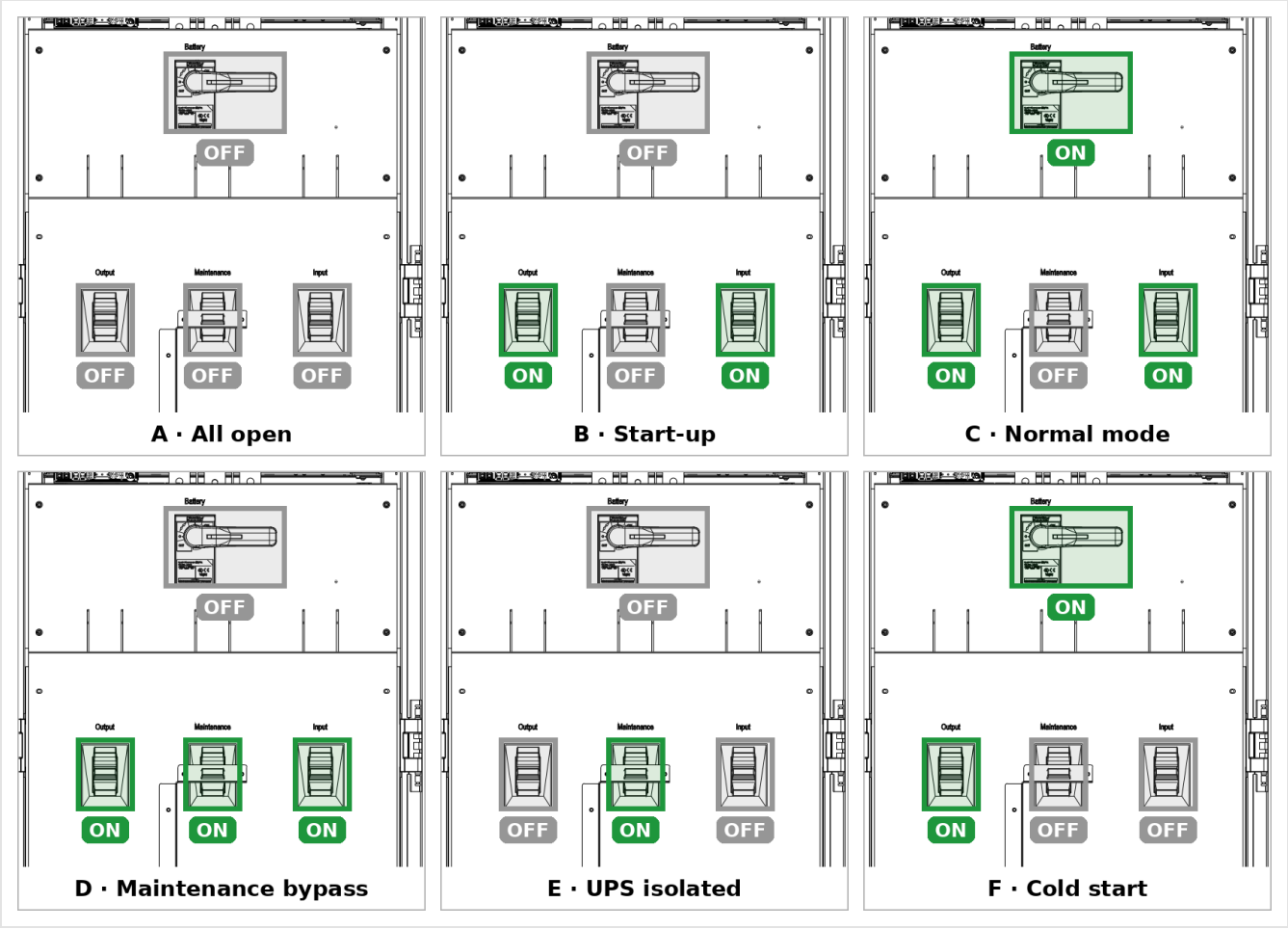

FIGURE 5-1 Breaker states A to F used in the procedures — green ON, gray OFF

TABLE 5-2 Breaker states

State	Battery	Output	Maintenance	Input	Used for
A · All open	OFF	OFF	OFF	OFF	Before start-up, wiring, after shutdown
B · Start-up	OFF	ON	OFF	ON	Start-up, until the UPS is on inverter
C · Normal mode	ON	ON	OFF	ON	Normal operation
D · Maintenance bypass	OFF	ON	ON	ON	Load on the maintenance bypass and the static bypass
E · UPS isolated	OFF	OFF	ON	OFF	Load on the maintenance bypass only; power section isolated
F · Cold start	ON	ON	OFF	OFF	Start on battery without utility

5.2 Starting the UPS

The commissioning engineer starts the UPS after the installation is complete.

⚠ *WARNING*

During this procedure the output terminals become live. If loads are connected, check with their users that it is safe to apply power; otherwise isolate them from the UPS output.

1. Check that all breakers are open (Figure 5-1, state A).
2. Close the **Output** breaker and the **Input** breaker in the cabinet (Figure 5-1, state B), then the external main input breaker and, with a separate bypass feed, the external bypass input breaker. You see: the touchscreen lights and shows the home page (Figure 6-2); the indicators of the power modules turn green.
3. Wait about 30 s: the rectifiers have started and the static bypass closes; the inverters start.
4. After about 90 s the UPS transfers from bypass to inverter. You see: green indicator; on the home page the energy flow runs from the utility through rectifier and inverter to the load (Figure 6-2, item 5): normal mode.
5. Close the **Battery** breaker (Figure 5-1, state C). The UPS starts charging the batteries. You see: **Cabinet › Battery** shows the battery connected and charging (Figure 6-4).
6. Close the external output breaker, then the branch breakers one by one.

i NOTE The stored settings load at start-up. Every event of the start-up is recorded in **Log**.

5.3 Starting on battery (cold start)

Use the cold start when there is no utility and the load must run from the battery.

1. Check that the batteries are connected and at least one power module is installed. Close the **Output** and **Battery** breakers (Figure 5-1, state F).
2. Press the red cold-start button on the communication panel (Figure 4-10, item 6) for 3 s. You see: the monitoring module starts and the touchscreen lights.
3. Press the recessed Cold Start pinhole of a power module (Figure 2-8, item 3). You see: the module starts the rectifier, then the inverter; after about 60 s the system runs in battery mode.
4. Close the external output breaker to supply the loads.

5.4 Transferring to bypass and back

1. To bypass: **Control › Function › Manual Bypass** (Figure 6-20, item 3). Make sure the bypass is normal first.
2. Back to normal: **Control › Function › Ecs Manual Bypass** (item 4). The UPS normally returns by itself; use this command when the bypass frequency was out of tracking range.
3. If the bypass frequency is out of tracking range, **Manual Transfer to Inverter** (item 2) forces the transfer. The output can be interrupted for 20 ms or more.
4. To battery: automatic, as soon as the utility fails or leaves its limits.

⚠ *WARNING*

Make sure the bypass is normal before you transfer to bypass, or the load can drop. In bypass mode the load is fed directly by the utility and is not protected.

5.5 Maintenance bypass

Use this procedure to service the power modules or the battery while the load stays on.

5.5.1 From normal mode to maintenance bypass

> **⚠ WARNING**
>
> Before you start, check on the touchscreen that the bypass is normal and the inverters are synchronized with it, so as not to interrupt the load.

1. Transfer the UPS to bypass: **Control › Function › Manual Bypass** (Figure 6-20, item 3). You see: the inverters stop and the buzzer sounds; the static bypass feeds the load.
2. Open the **Battery** breaker and close the **Maintenance** breaker (Figure 5-1, state D). The maintenance bypass and the static bypass now feed the load together.
3. To isolate the power section, open the **Input** and **Output** breakers (Figure 5-1, state E). The load runs on the maintenance bypass alone.

5.5.2 From maintenance bypass to normal mode

1. Close the **Output** and **Input** breakers (Figure 5-1, state D). You see: after about 30 s the static bypass closes; the static bypass and the maintenance bypass feed the load together.
2. Check on the touchscreen that the static bypass feeds the load, then open the **Maintenance** breaker. The static bypass feeds the load.
3. After about 30 s the rectifiers start, then the inverters. After one more minute the UPS transfers to inverter (normal mode). If it stays on bypass, select **Ecs Manual Bypass**.
4. Close the **Battery** breaker (Figure 5-1, state C).

> **⚠ DANGER**
>
> With the Maintenance breaker closed, dangerous voltage is present on the terminals and the internal busbars. Before you open a power module, wait 10 minutes for its DC bus capacitors to discharge.

5.6 Servicing the bypass & monitoring module

The bypass & monitoring module is not hot-swappable and the bypass input has no breaker in the cabinet. It can be removed only with the load on an **external** maintenance bypass, or with the UPS fully off. This work is reserved to AEC service.

1. Check that the UPS is in normal mode and the bypass is normal. Transfer the load to the maintenance bypass (Section 5.5.1, steps 1 and 2).
2. Close the external maintenance bypass breaker.
3. Open, one by one, the **Battery** breaker, the external main input breaker, the external bypass input breaker and the external output breaker. The load runs on the external maintenance bypass.
4. When the touchscreen is dark, pull out the bypass & monitoring module and service it.
5. Insert the module and tighten the screws on both sides.
6. Close, one by one, the external output breaker, the external bypass input breaker and the external main input breaker.
7. After about 2 minutes the touchscreen shows the bypass normal. Open the external maintenance bypass breaker.
8. Open the **Maintenance** breaker. The inverters start by themselves; after about 60 s the UPS transfers to normal mode. Close the **Battery** breaker.

5.7 Shutting the UPS down

1. Shut the loads down correctly.
2. Open the **Battery** breaker, then the **Input** breaker and the external main input and bypass input breakers, one by one. You see: the touchscreen goes dark.
3. Open the **Output** breaker (Figure 5-1, state A). In maintenance bypass, also open the **Maintenance** breaker.

5.8 Emergency power off (EPO)

Press the covered EPO button beside the touchscreen (Figure 6-1, item 4) in an emergency such as fire or flood. The UPS stops the rectifiers, the inverters and the bypass at once: the load is no longer powered and the battery stops charging and discharging. With utility present the controls stay powered but the output is off. To isolate the UPS completely, open the utility supply.

Restart after EPO. Power the UPS again as in Section 5.2.

> ⚠ ***WARNING***
>
> After EPO the load is not powered by the UPS. If the Maintenance breaker is closed and the utility is present, the output stays energized.

5.9 Replacing a power module

Only trained operators may replace a power module. Check first that the UPS is in normal mode and the bypass is normal.

> ⚠ ***DANGER · Hot swap is energized work***
>
> With the UPS running, the connectors at the back of the slot stay live (AC and ±240 V DC bus). Remove or insert a module only under the shock and arc-flash risk assessment of Section 1.4, with the PPE it requires, standing in front of the cabinet with the door fully open. Keep the rear doors closed and nobody behind the cabinet. The incident energy at the module face is not published: ask AEC; until it is, treat module replacement as work inside the arc-flash boundary.

1. Check that the remaining modules can carry the load. If they cannot, transfer the UPS to bypass first (Section 5.4).
2. Select **Control › Function › Module Button Power Enable** (Figure 6-20, item 6), then press and hold the module's OFF pinhole (Figure 2-8, item 2) for 3 s. The module leaves the system.
3. After 10 minutes remove the two fixing screws and pull the module out — two people.
4. Push the new module in and tighten the screws. Insert modules one at a time, at least 10 s apart. Each module starts and joins the system by itself.
5. If you transferred to bypass in step 1, return to normal mode 2 minutes after the module has started (**Ecs Manual Bypass**).

> ⚠ ***WARNING***
>
> Remove power modules from the top down, so the cabinet does not tip. Before you handle a removed module, check with a multimeter that its DC bus is below 36 V DC.

5.10 Battery test and maintenance

1. **Control › Test › Battery Test** (Figure 6-21, item 1): the UPS runs on battery for 20 s. A weak battery raises an alarm and the UPS returns to normal or bypass mode. Before the test, check that no alarm is active, that the bypass is normal and that the battery voltage is above 90 % of the float voltage (**Cabinet › Battery**: above 486 V DC with the default float of 540 V).
2. **Battery Maintain** (item 2): a maintenance discharge down to 1.1 × the end-of-discharge voltage. It stops at 20 % capacity or at low voltage. The same checks as the test apply, and the load must be above 25 %.
3. **Stop Test** (item 3) ends a test or a maintenance discharge.
4. An automatic maintenance discharge can repeat on a set period. AEC service enables it (**Battery Auto Discharge** in Set, and the period in **Set › BATT Set**). It starts only with a load of 20–100 %.
5. Test the batteries after a long period without use.

5.11 Language, date and time

- **Language: Set › Language** (Figure 6-14). Choose English, Spanish, French, German, Italian, Portuguese and other languages.
- **Date and time: Set › Sys Func** (Figure 6-14). Tap the date and time, enter the new values and press Set. Every log entry carries them.

CHAPTER 6

06 Touchscreen

The AEC color touchscreen: the operator panel, home page, cabinet and module readings, logs, settings, controls and waveforms.

i NOTE The screen pictures in this chapter were taken from a display not connected to a UPS: the readings are zero and "Communication Abnormal" is shown. Your screens show the live values.

6.1 Operator panel

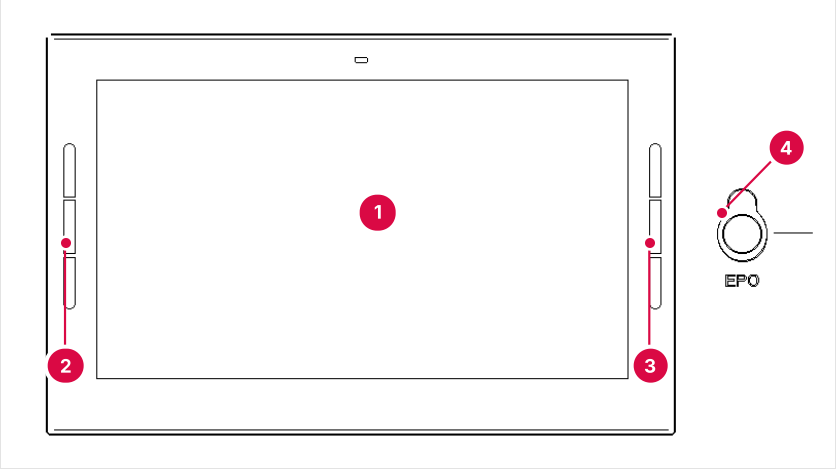

1. Touchscreen, 7-inch color, 1024 × 600
2. Status indicator, left of the screen
3. Status indicator, right of the screen
4. EPO button, under its cover: press it

FIGURE 6-1 Operator panel on the front door

The status indicator shows the system status. The buzzer tells the kind of alarm.

TABLE 6-1 Indicators and buzzer

Signal	Meaning
Steady green	Normal operation
Steady yellow	Warning: for example utility failure or overload
Steady red	Failure
Two short beeps and one long beep	General alarm (for example utility input abnormal)
Continuous tone	Serious fault (for example a fuse or hardware fault)
Orange text on the home page	General alarm
Red text on the home page	Serious alarm

6.2 Home page and main menu

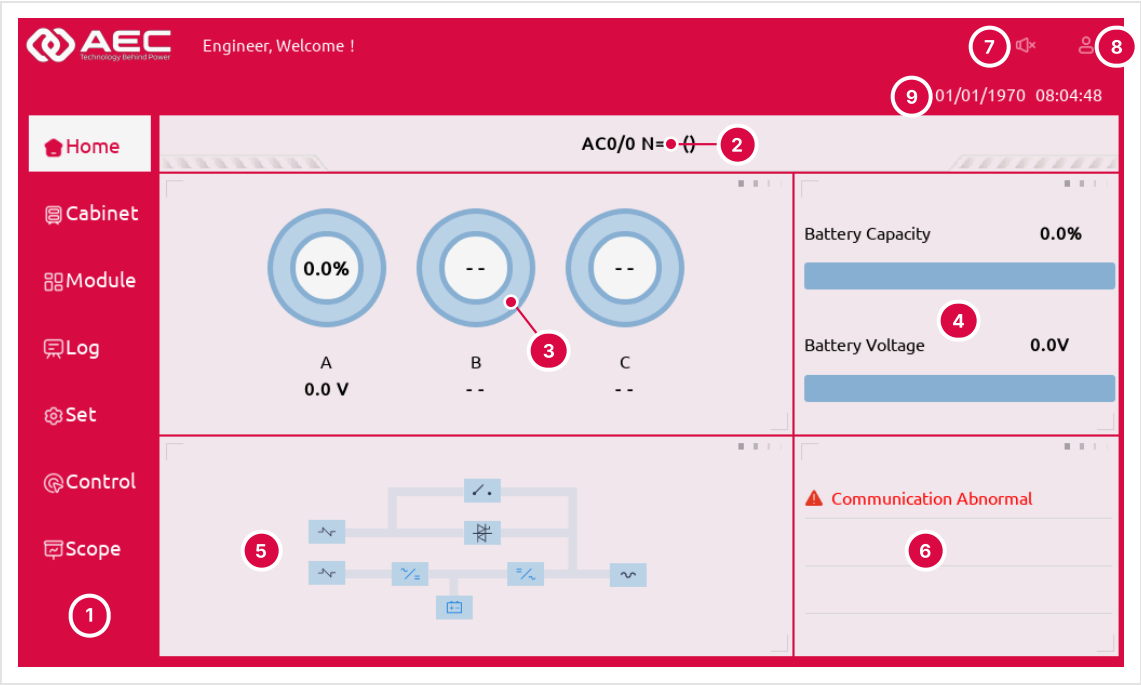

1. Main menu: Home, Cabinet, Module, Log, Set, Control, Scope
2. Status bar: cabinet capacity / module capacity, number of modules (N = ...), single (S) or parallel (P) mode
3. Output voltage gauges, phases A, B, C
4. Battery capacity and battery voltage bars
5. Energy flow: bypass, maintenance bypass, main input, rectifier, inverter, battery, output
6. Warning information: red = serious alarm, orange = general alarm
7. Speaker icon: mute or unmute the alarm
8. User icon: log in or out
9. Date and time

FIGURE 6-2 Home page

The home page comes up after the welcome window. A dash instead of a value means that phase is not wired or not read.

TABLE 6-2 Menu tree

Menu	Pages
Home	Status bar, output gauges, battery bars, energy flow, warnings (Figure 6-2)
Cabinet	Bypass · Main · Output · Load · Battery (Section 6.3)
Module	Input · Output · Load · Information, for the module selected in the list (Section 6.4)
Log	Current Alarm · History Alarm · Operation Log · Maintenance Record (Section 6.5)
Set	Language · Sys Func · NetWork · Uart · Display Set · Alarm Set · BMS · Comm Set · BATT Set · Sys Set · System Code1 · Calibration · Dry Contact · Rate Set (Section 6.6)
Control	Function · Test (Section 6.7)
Scope	Output Voltage · Output Current · Bypass Voltage (Section 6.8)

> **⚠ CAUTION**
>
> Settings and controls are protected by login. AEC gives the login accounts to the owner and the commissioning engineer. Only authorized, trained personnel may change settings or use the Control menu.

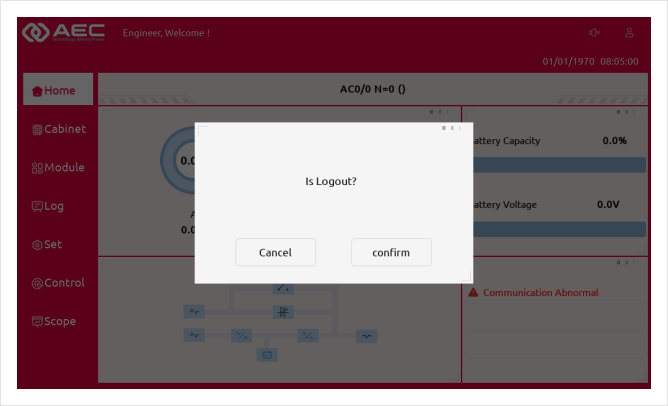

FIGURE 6-3 The user icon asks before it logs out

6.3 Cabinet (system readings)

TABLE 6-3 Cabinet pages

Page	Shows
Bypass	Phase voltage (V), current (A), frequency (Hz) and power factor of the bypass; bypass fan running time.
Main	Phase voltage, current, frequency and power factor of the main input; rated input.
Output	Phase voltage, current, frequency and power factor of the output; rated output.
Load	Apparent power (kVA), active power (kW), reactive power (kVAr) and load (%) per phase.
Battery	Number of batteries per string, status (boost / float charge), run time, voltage and current of each half, capacity compared with a new battery (%), remaining time (min), battery and ambient temperature.

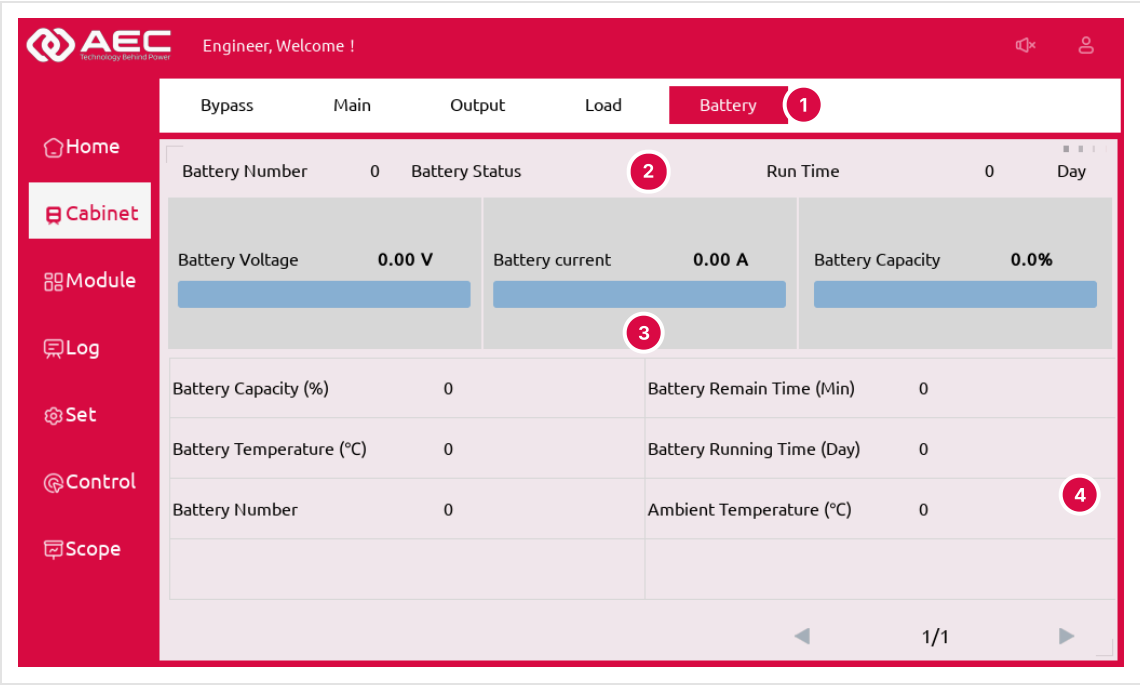

1. Cabinet tabs: Bypass, Main, Output, Load, Battery
2. Battery number per string, status (boost / float), run time
3. Battery voltage, current and capacity, positive and negative half
4. Capacity compared with a new battery, remaining time, battery and ambient temperature

FIGURE 6-4 Cabinet — Battery, the page to check after start-up and during an outage

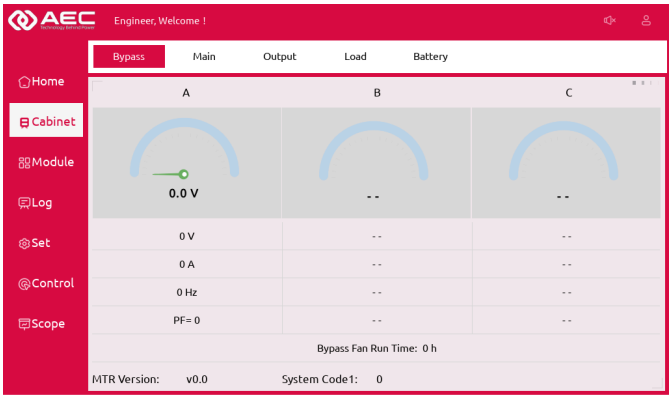

Cabinet — Bypass

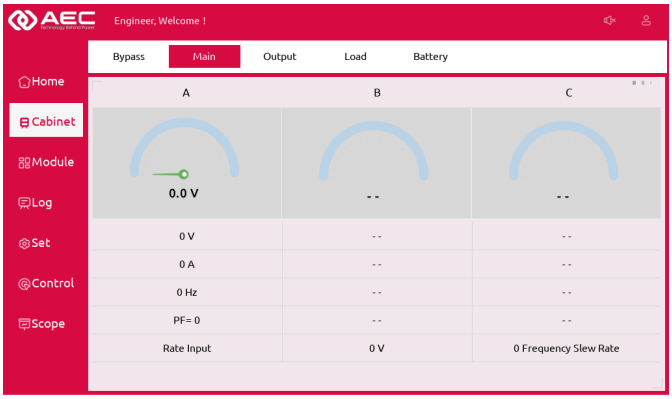

Cabinet — Main

FIGURE 6-5 Cabinet — Bypass and Main

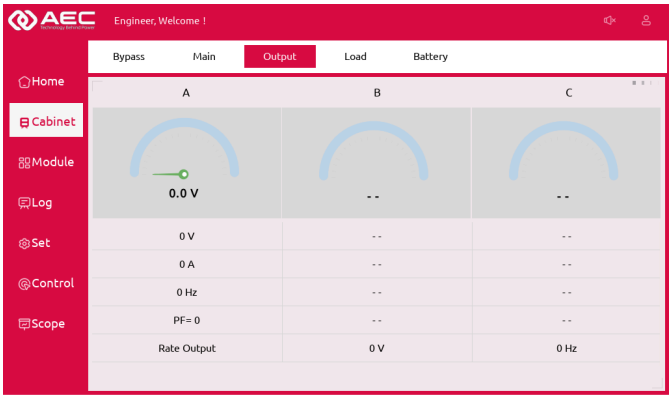

Cabinet — Output

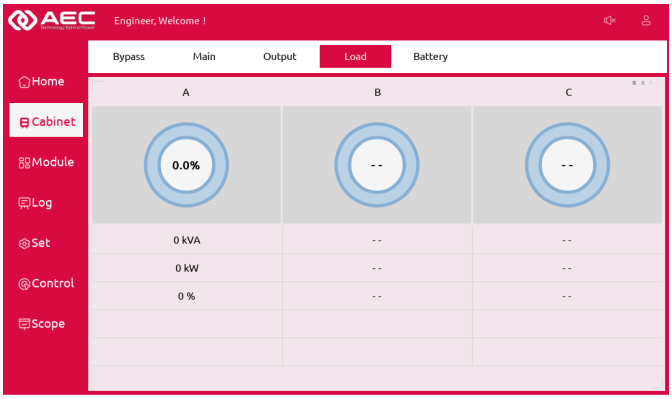

Cabinet — Load

FIGURE 6-6 Cabinet — Output and Load

6.4 Module (power module readings)

Select a power module in the list on the right to see its values.

TABLE 6-4 Module pages

Page	Shows
Input	Input phase voltage, current, frequency and power factor of the selected module.
Output	Output phase voltage, current, frequency and power factor of the selected module.
Load	Apparent, active and reactive power and load (%) of the selected module.
Information	DC bus voltage (+/–), battery voltage, charger voltage and current, discharge current, inverter voltage per phase, fan and capacitor running hours, inlet, outlet and IGBT temperatures.

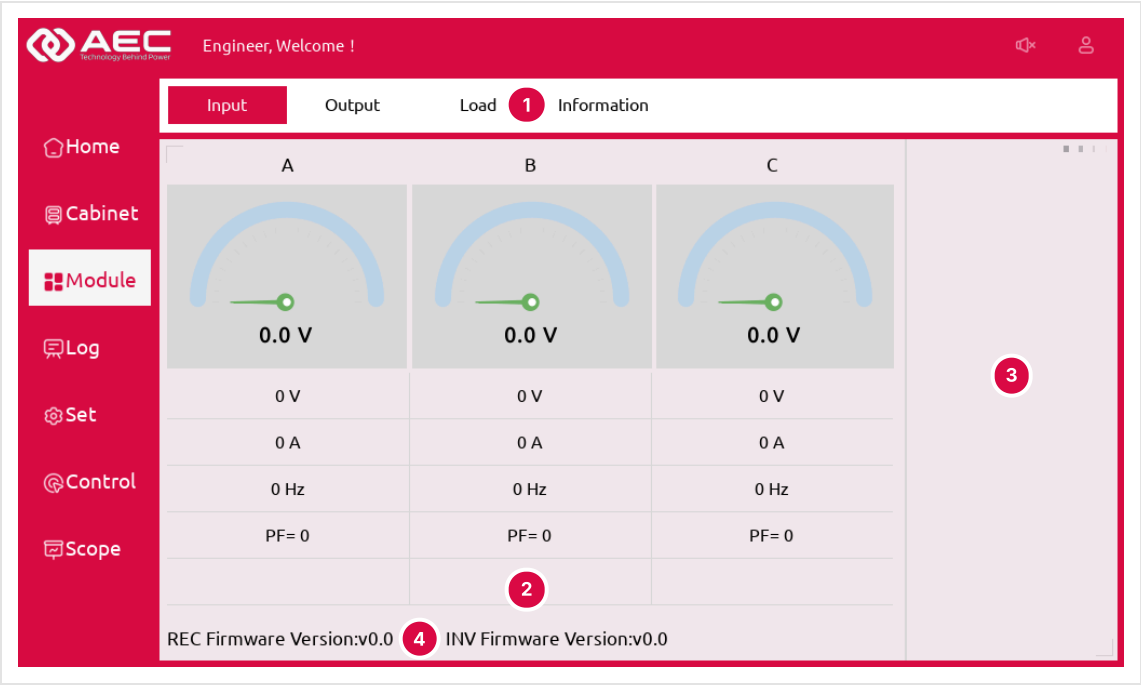

1. Module tabs: Input, Output, Load, Information
2. Readings of the selected module, phases A, B, C
3. Module list: green = module shown, black = module connected, empty = no module in that slot; the lamps beside a module show input, output and battery (green normal, red abnormal)
4. Rectifier and inverter firmware versions of the module

FIGURE 6-7 Module — Input

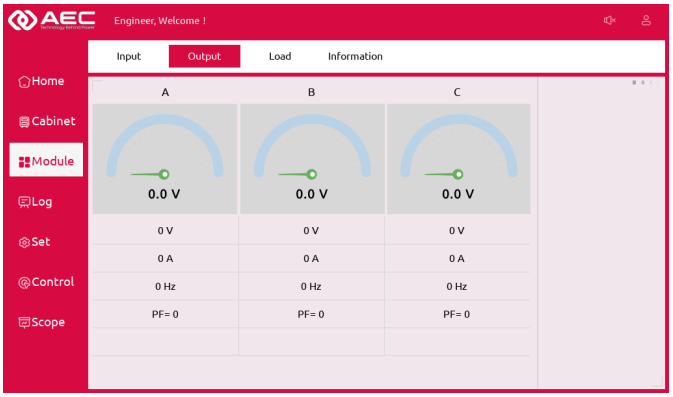

Module — Output



Module — Load

FIGURE 6-8 Module — Output and Load

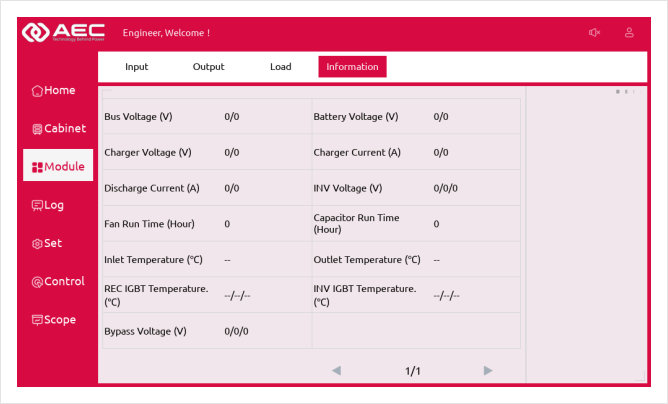

FIGURE 6-9 Module — Information

6.5 Log

Log has four pages: **Current Alarm** (the alarms active now), **History Alarm** (alarms and events with the time each one was set and cleared), **Operation Log** (commands and settings made on the touchscreen) and **Maintenance Record**. The meaning of every event is in Section 11.3.

6.6 Set (settings)

> ⚠ ***CAUTION***
>
> Settings change how the UPS works. Battery, calibration, communication and dry-contact settings are for service engineers. The number of batteries set must equal the number installed, or the batteries and the UPS can be seriously damaged.

The Set menu has two rows of tabs; the green arrows at the ends switch between them.

TABLE 6-5 Set pages

Page	Settings	Default
Language	Display language (Section 5.11).	—
Sys Func	Screen saver and wait time, system date and time; software version and serial number.	—
NetWork	Static or DHCP, IP address, subnet mask, gateway and DNS servers of the display and its web monitor.	—
Uart	Serial port, baud rate, Modbus RTU enable.	—
Display Set	Display protocol and phase labels.	—
Alarm Set	Level of each UPS event — green: event, yellow: warning, red: fault.	—
BMS	Add and apply a battery management system device (lithium battery cabinet).	Not used with the internal VRLA battery
Comm Set	Protocol (MEGA, Modbus ASCII, Modbus RTU), baud rate and address of the RS-232 and RS-485 / USB ports.	—

Page	Settings	Default
BATT Set	Battery type, number, capacity (Ah), float and boost voltage per cell, end-of-discharge voltage at 0.6 C and 0.15 C, charge current limit, temperature compensation, automatic maintenance discharge period; BMS communication control.	VRLA, 40 blocks, 54 Ah, 2.25 / 2.30 V/cell, 1.65 / 1.75 V/cell (Table 9-1)
Sys Set	System mode (single, parallel, single ECO, parallel ECO, LBS, parallel LBS), number of units and cabinet ID, output voltage adjustment, bypass voltage and frequency window, redundant modules.	Bypass window +15 % / −20 %
System Code1	Parallel delayed start; line-voltage display.	—
Calibration	Output, bypass, inverter DC, input AC and battery voltages against a meter (maintenance only).	—
Dry Contact	Function of the three inputs (e.g. generator input) and four outputs (e.g. battery breaker trip).	As in Table 4-8
Rate Set	Rated input and output voltage and frequency.	480 V, 60 Hz

A dash means no default is published. The access levels behind the login (which settings an operator, an engineer or AEC service may change) are not published: ask AEC.

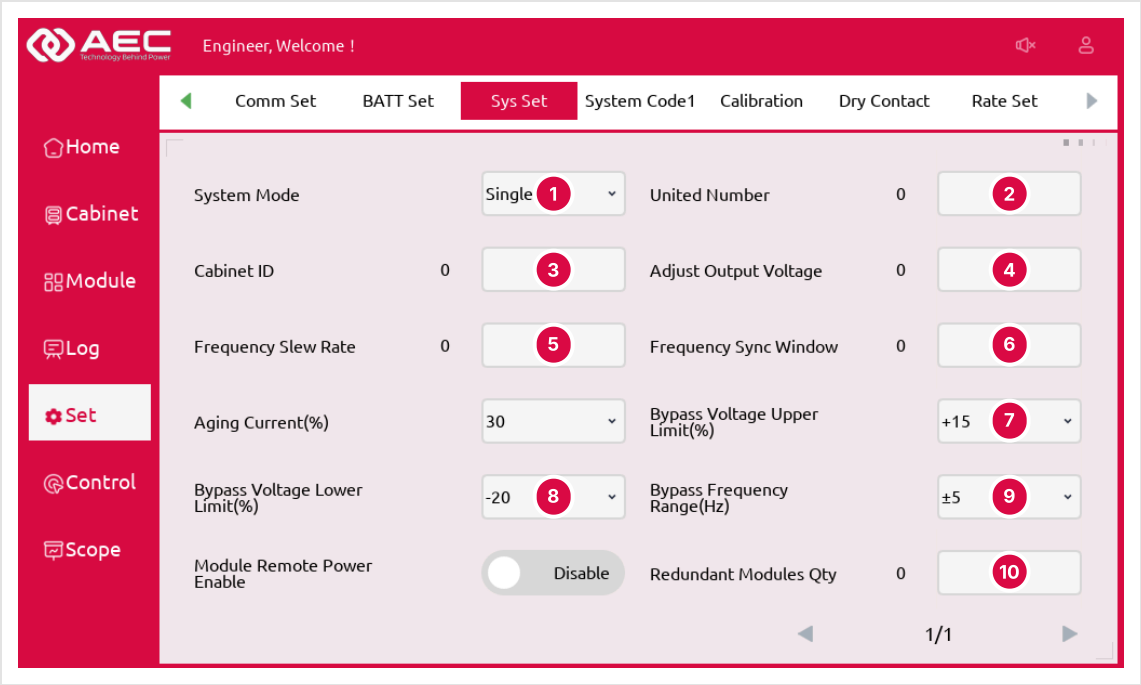

1. System Mode: Single, Parallel, Single ECO, Parallel ECO, LBS, Parallel LBS
2. United Number: number of cabinets in parallel
3. Cabinet ID: 0, 1, 2 — one per cabinet
4. Adjust Output Voltage
5. Frequency Slew Rate
6. Frequency Sync Window
7. Bypass Voltage Upper Limit: +10 / +15 / +20 %
8. Bypass Voltage Lower Limit: −10 / −15 / −20 / −30 / −40 %
9. Bypass Frequency Range: ±1, ±3, ±5 Hz
10. Redundant Modules Qty (N+X)

FIGURE 6-10 Set — Sys Set

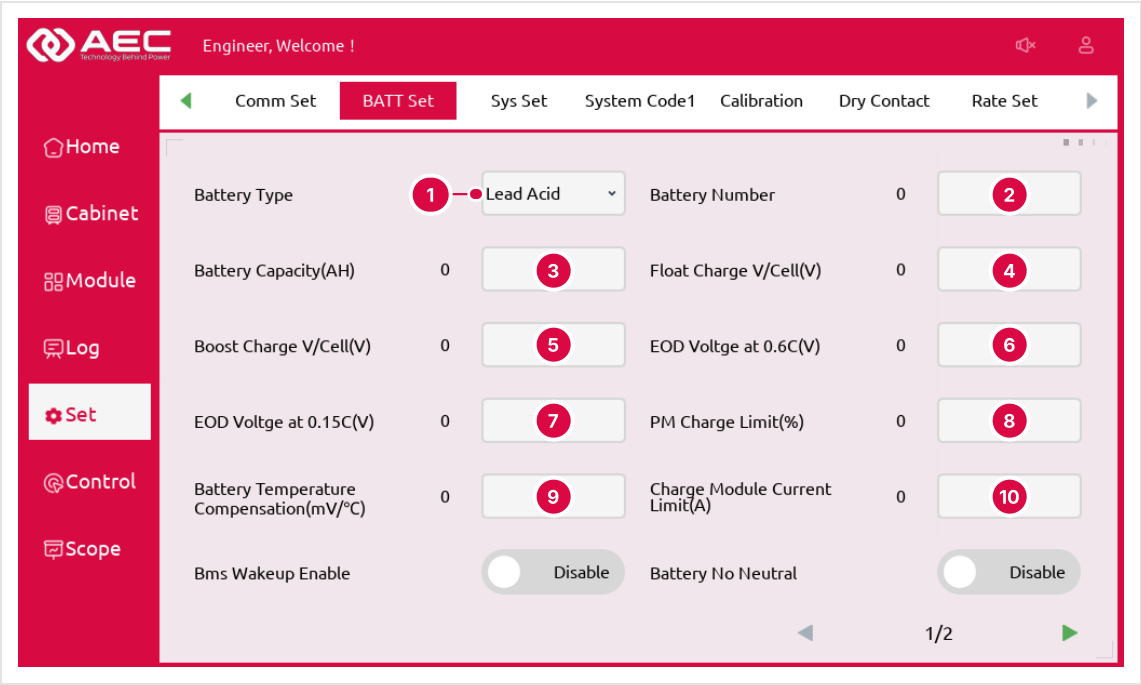

1. Battery Type: VRLA
2. Battery Number: 40 blocks per string
3. Battery Capacity (Ah)
4. Float Charge V/Cell
5. Boost Charge V/Cell
6. EOD Voltage at 0.6 C
7. EOD Voltage at 0.15 C
8. Charge current limit (%)
9. Battery Temperature Compensation (mV/°C)
10. Charge Module Current Limit (A)

FIGURE 6-11 Set — BATT Set, page 1

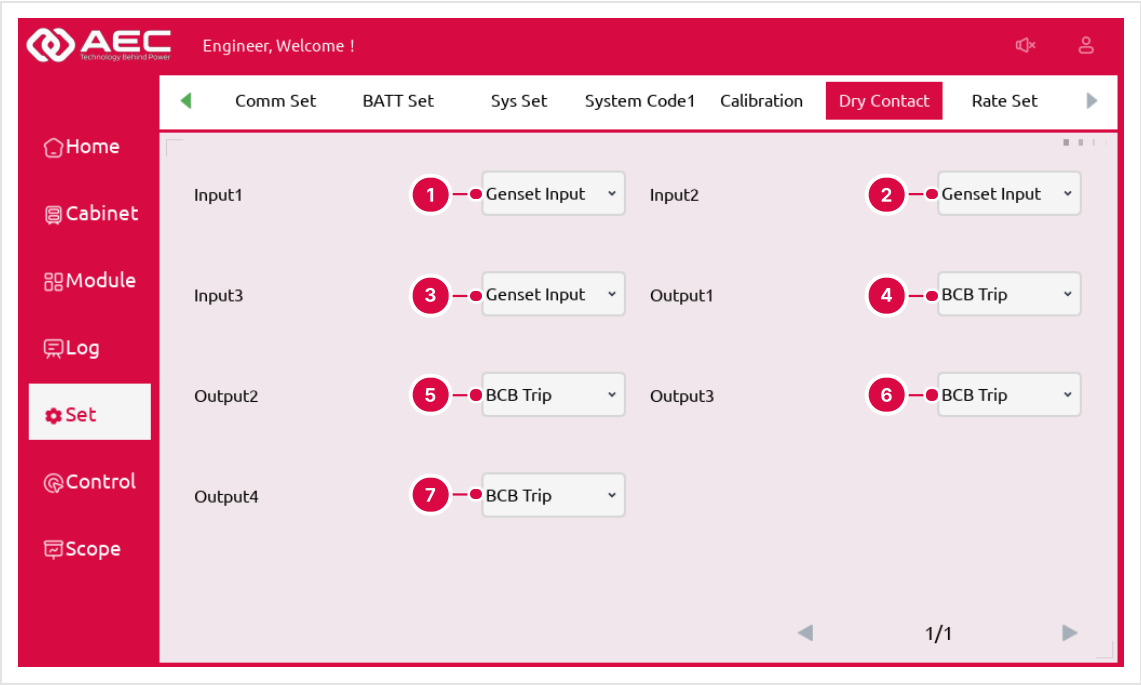

1. Input1 (IP1)
2. Input2 (IP2)
3. Input3 (IP3), e.g. Genset Input
4. Output1 (OP1)
5. Output2 (OP2)
6. Output3 (OP3)
7. Output4 (OP4), e.g. BCB Trip

FIGURE 6-12 Set — Dry Contact

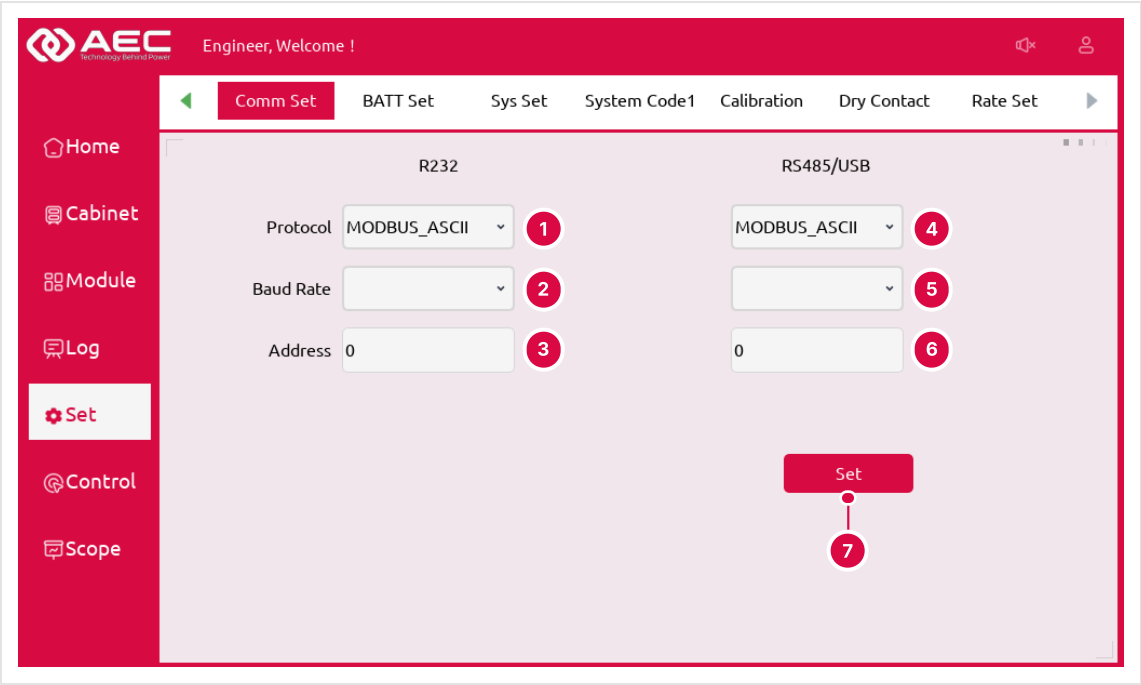

1. RS-232 protocol
2. RS-232 baud rate
3. RS-232 address
4. RS-485 / USB protocol
5. RS-485 / USB baud rate
6. RS-485 / USB address
7. Set: apply

FIGURE 6-13 Set — Comm Set

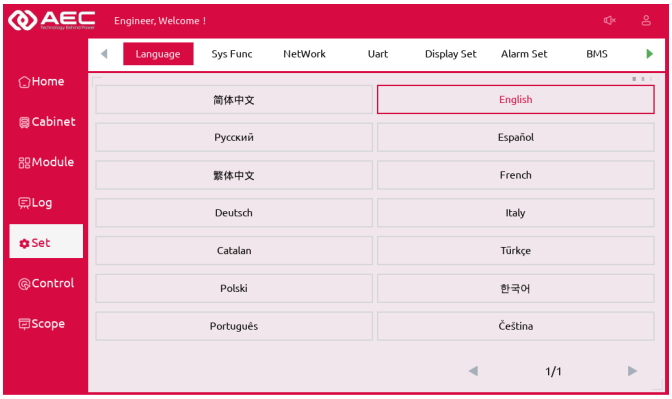

Language

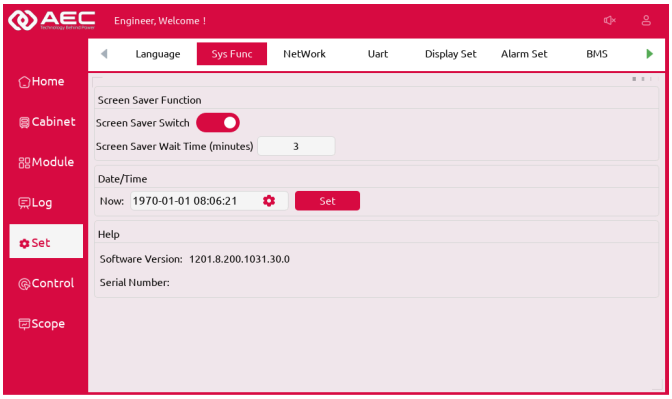

Sys Func

FIGURE 6-14 Set — Language and Sys Func

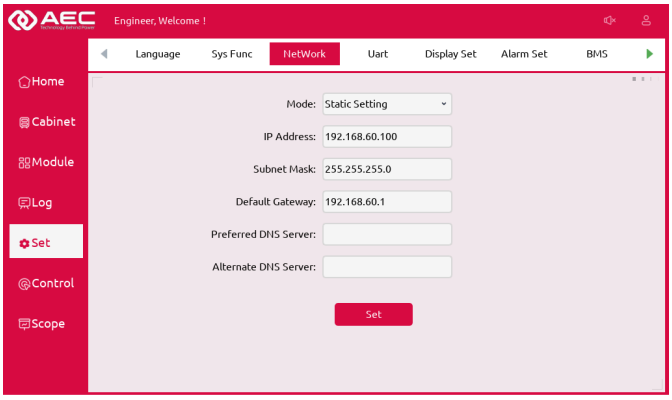

NetWork

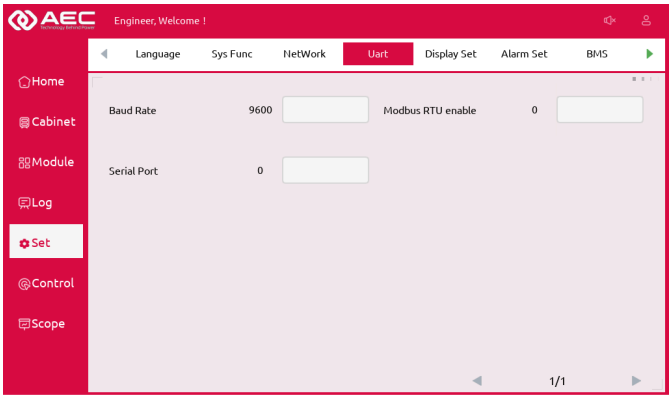

Uart

FIGURE 6-15 Set — NetWork and Uart

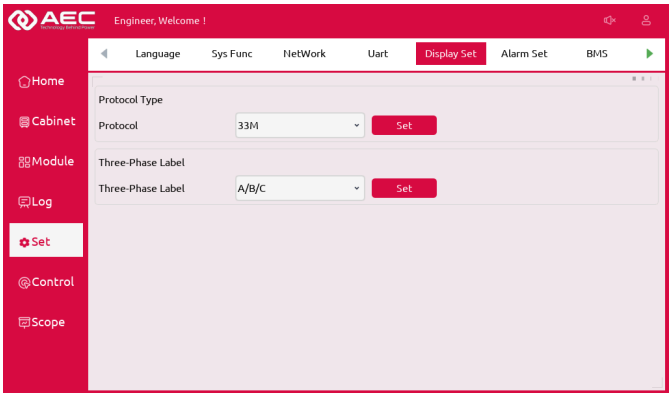

Display Set

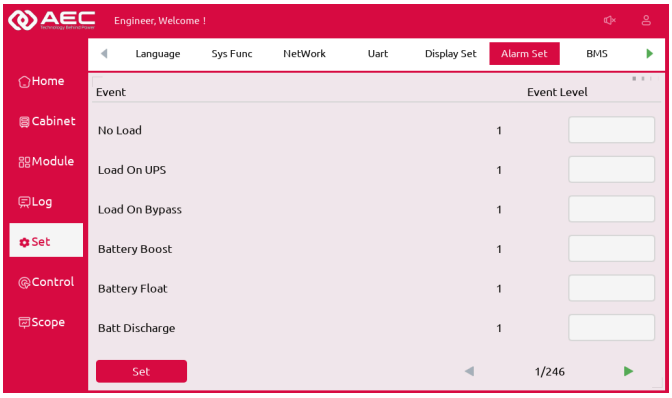

Alarm Set

FIGURE 6-16 Set — Display Set and Alarm Set

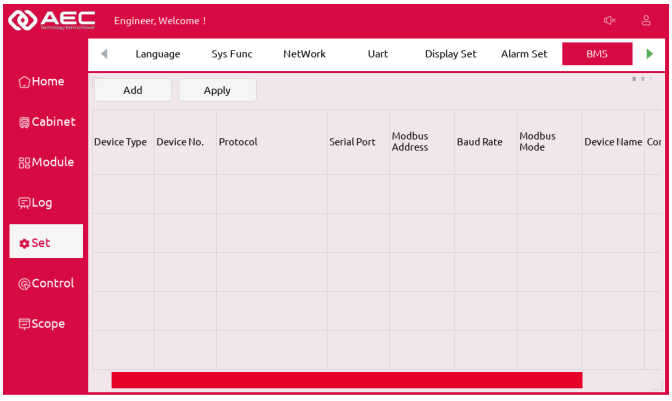

BMS

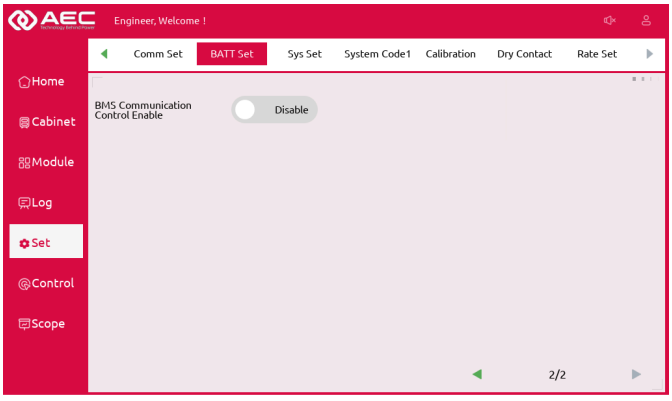

BATT Set, page 2

FIGURE 6-17 Set — BMS and BATT Set page 2

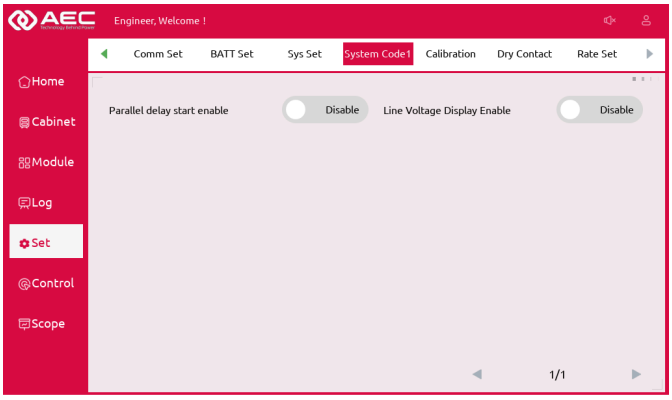

System Code1

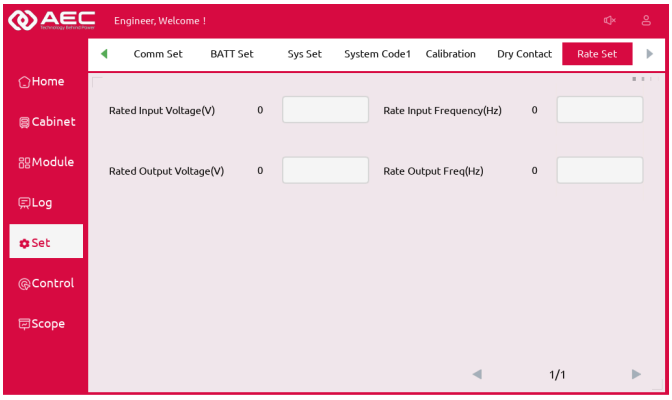

Rate Set

FIGURE 6-18 Set — System Code1 and Rate Set

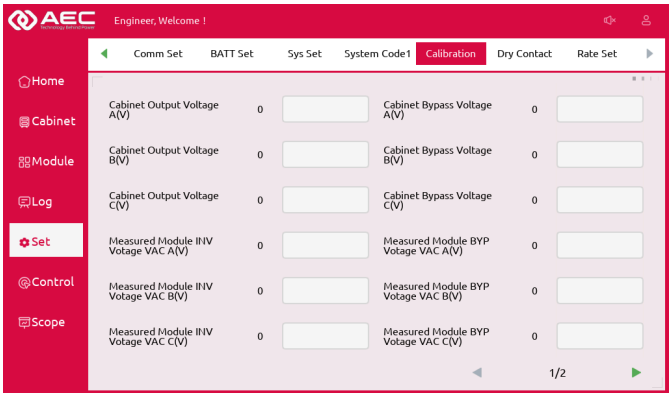

Calibration, page 1

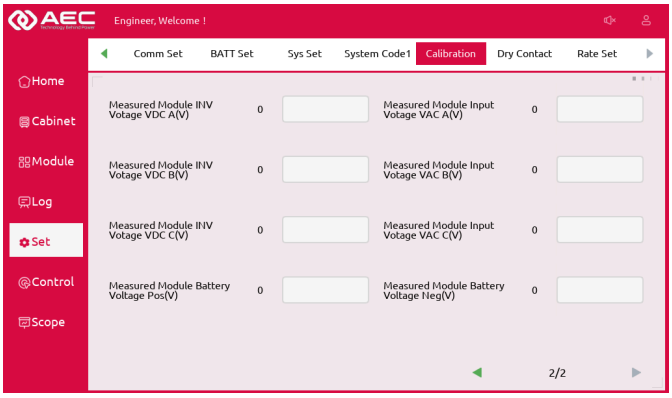

Calibration, page 2

FIGURE 6-19 Set — Calibration, pages 1 and 2

6.7 Control

TABLE 6-6 Control pages

Page	Commands
Function	ON/OFF Control (inverter on/off, with confirmation) · Manual Transfer to Inverter (the output can be interrupted) · Manual Bypass and Ecs Manual Bypass (its cancel) · Fault Clear · Module Button Power Enable (enables the OFF pinhole on the power modules) · Reset Dust Filter (days of use and service period) · Clear History Log · Clear Battery History Data (number of discharges, days in service and hours of discharge; after new batteries) · Bypass Fan Time Reset.
Test	Battery Test · Battery Maintain · Stop Test · Manual Float · Manual Boost charge.

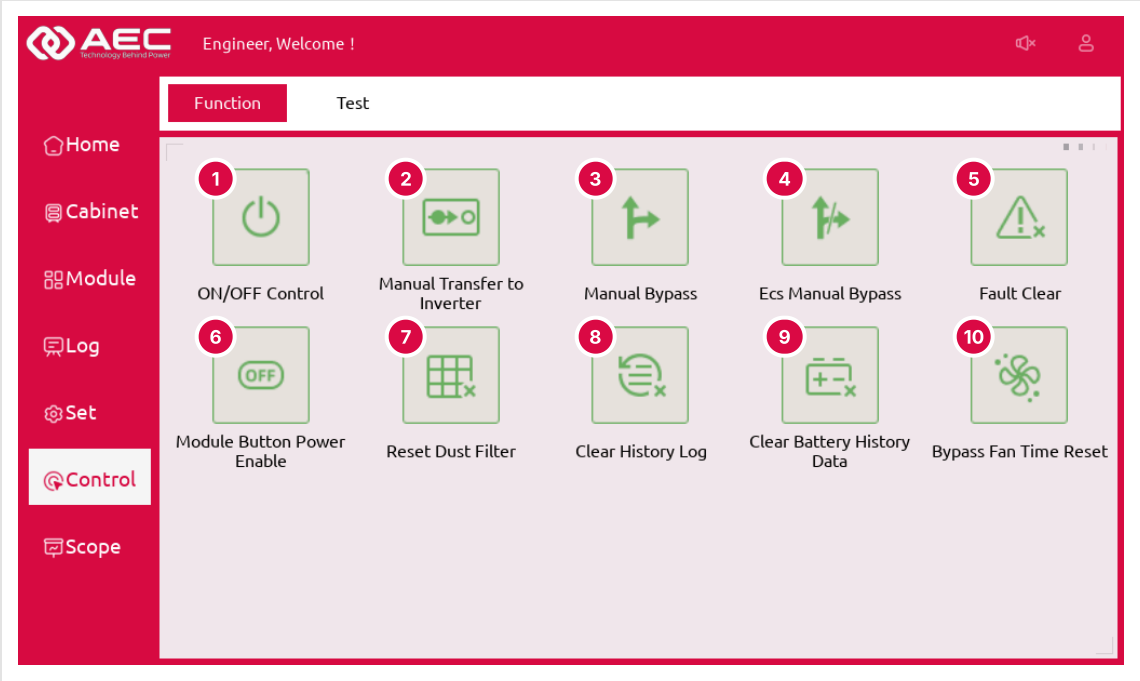

1. ON/OFF Control: inverter on or off
2. Manual Transfer to Inverter
3. Manual Bypass: load to the static bypass
4. Ecs Manual Bypass: cancel the manual bypass
5. Fault Clear
6. Module Button Power Enable: enables the modules' OFF pinhole
7. Reset Dust Filter
8. Clear History Log
9. Clear Battery History Data
10. Bypass Fan Time Reset

FIGURE 6-20 Control — Function: the commands used in the operating procedures

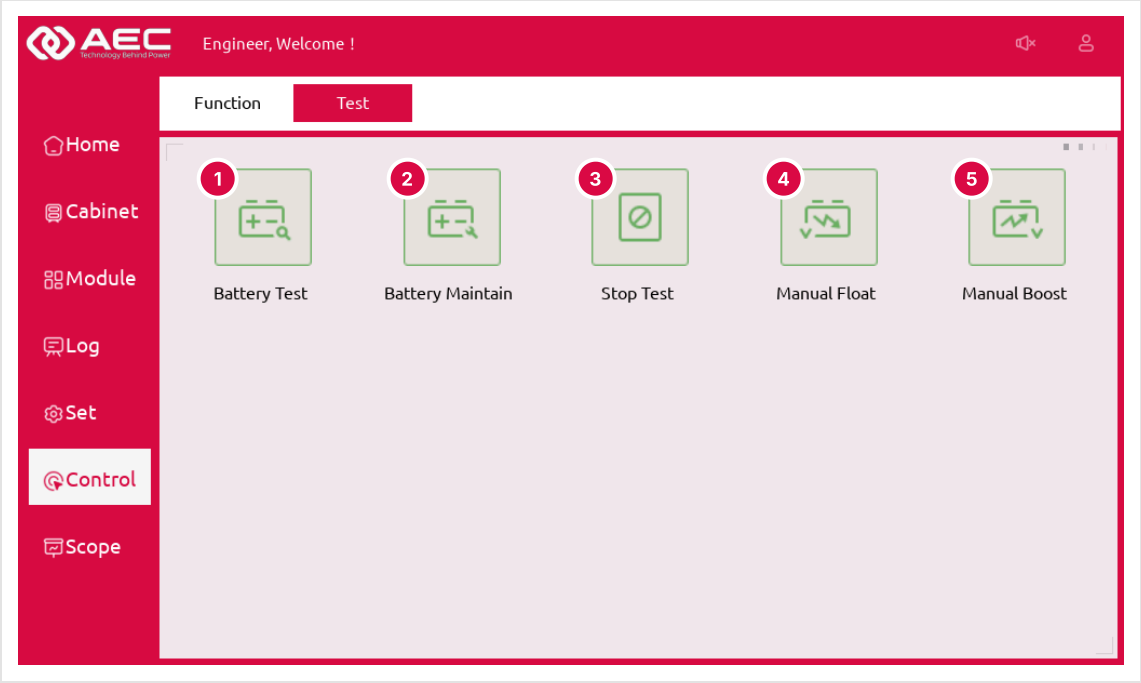

1. Battery Test (20 s on battery)
2. Battery Maintain (discharge to 1.1 × EOD)
3. Stop Test
4. Manual Float charge
5. Manual Boost charge

FIGURE 6-21 Control — Test

6.8 Scope (waveforms)

Scope shows the waveforms of the output voltage, the output current and the bypass voltage of the three phases: yellow = phase A, green = phase B, blue = phase C. Tap a tab at the top to choose the waveform.



FIGURE 6-22 Scope — output voltage, output current and bypass voltage

CHAPTER 7

07 Everyday use

Power outages, what the panel tells you, and good habits.

7.1 During a power outage

1. The UPS switches to battery with no break. The load keeps running, the energy flow on the home page shows the battery feeding the inverter, and the buzzer sounds.
2. Silence the buzzer with the speaker icon at the top right of the screen (Figure 6-2, item 7).
3. Watch **Cabinet › Battery**: capacity and remaining time (Figure 6-4).
4. If the outage lasts, shut the loads down in order before the battery is exhausted — automatically through the SNMP-M card if installed.
5. At the end of discharge the UPS switches its output off to protect the battery. When the utility returns it restarts and recharges the battery (auto restart).

7.2 What the panel tells you

TABLE 7-1 What you see, what it means, what to do

What you see	Meaning	What to do
Green indicator; energy flow from the utility through rectifier and inverter	Normal mode	Nothing.
Battery feeding the inverter; buzzer	Utility failure: on battery	See Section 7.1.
Yellow indicator; two short beeps and one long beep; orange text	General alarm (for example utility input abnormal)	Read **Log**; look the event up in Section 11.3.
Red indicator; continuous tone; red text	Serious fault (for example a fuse or hardware fault)	Read **Log**, note the event, call AEC service. Do not restart repeatedly.
Load on bypass in the energy flow	Manual bypass, overload or a fault	Read **Log**; remove the cause; return with **Ecs Manual Bypass** or **Manual Transfer to Inverter**.
Redundancy alarm (Lost N+X Redundant)	Fewer modules than the redundancy set	Check the modules in **Module**; replace or reinsert the failed one.

7.3 Good habits

- Leave the UPS running all the time. Check the home page and **Log** once a week.
- Keep the room clean, cool and within 32–104 °F (0–40 °C). Keep the front and rear of the cabinet clear.
- Before adding load, check **Cabinet › Load**: stay within the capacity with one module out.
- Run a battery test every six months (**Control › Test › Battery Test**).
- Only trained personnel use the Set and Control menus.

CHAPTER 8

08 Communication and monitoring

The communication ports, the SNMP-M network card and the UPS View software.

The communication ports — RS-232, RS-485, USB, dry contacts, the SNMP and intelligent slots and EPO — are described in Section 4.9. Set the protocol, baud rate and address of the serial ports in **Set › Comm Set** (Figure 6-13).

8.1 Setting up the SNMP-M card

1. Fit the card in the slot marked SNMP on the bypass & monitoring module (Figure 4-10, item 5) — not in the intelligent slot, which is for the dry-contact card. Connect it to the network with an RJ45 cable. The green PWR LED lights.
2. On a PC in the same network, run IPSearch (AEC app › Support › Downloads › SNMP › SNMP-M). It lists the card with its IP and MAC address.
3. Select the card › NetWork set › Static IP: enter a free IP address, the subnet mask and the gateway (ask your IT department), or choose Obtain IP for DHCP. Press Set.
4. Press Web page (or type the card's IP in a browser) and log in as admin.
5. In the card's UPS settings choose protocol **ACM(10-600KVA)** (the label of the CIRRO-IB protocol in the card menu), port Uart · Port A, the same baud rate as the UPS (for example 9600) and address 1 — the same values as set on the UPS. The yellow DATA LED stops flashing when the card reads the UPS.
6. Set up e-mail alarms and, if used, SNMP traps (port 162) or Modbus TCP.

TABLE 8-1 SNMP-M card indicators

LED	State	Meaning
PWR (green)	On · Off	Card powered · not powered
SYS (red)	Off · Flashing · On	System normal · general alarm · serious alarm
DATA (yellow)	Off · Flashing	Communication with the UPS normal · abnormal

⚠ CAUTION

The card's default web accounts (admin, full rights; user, view only) and their passwords are given by AEC technical service. Change both passwords at the first login.

8.2 UPS View software

UPS View (version 2.0.7) monitors and sets up one UPS from a Windows PC through a direct cable, without the network card. Download UPSView_V2.0.7.rar from the AEC app (Support › Downloads › SNMP › SNMP-M), unpack it and run the program inside: no installation is needed.

TABLE 8-2 Connecting UPS View

Connection	How
RS-232	A serial cable from the UPS's RS-232 port to the PC's COM port (pin 2 TXD, pin 3 RXD, pin 5 GND); a USB-to-serial adapter on PCs without a COM port.

Connection	How
RS-485	Through a 485-232 adapter, with the special serial cable supplied with the UPS.
USB	A standard USB cable; some PCs need a driver.

1. Connect the cable to the RS-232, RS-485 or USB port of the UPS (Figure 4-10).
2. Start UPS View. Leave the equipment type, baud rate and Modbus mode on Auto. If the connection does not start, set them by hand: Equip Type **M(10-600kVA)**, Modbus mode RTU or ASCII and the baud rate as set on the UPS (**Set › Comm Set**), address 1. UPS View talks Modbus: ACM(10-600KVA) is the SNMP-M card's setting, not UPS View's. The RS-232 port does not answer while the UPS protocol is set to MEGA.
3. Choose the PC's COM port (Windows Device Manager › Ports).
4. UPS View shows the live data, the status, the alarms and the settings of the UPS.

NOTICE

The RS-232 port and the card slot share the same communication line. Use UPS View with the SNMP-M card removed, or monitor through the card — not both at the same time.

✓ **TIP** The AEC UPS View Monitor User Manual (AEC-UM-UPSV-US) describes every UPS View page; the SNMP-M User Manual describes the card's web interface. Both are in the AEC app, Support › Downloads › SNMP › SNMP-M.

CHAPTER 9

09 Battery management

The battery settings made at commissioning, their ranges, battery care and the battery protections.

CAUTION

The commissioning engineer makes the battery settings in **Set › BATT Set** (Figure 6-11). The number of blocks set must equal the number installed, or the batteries and the UPS can be damaged.

TABLE 9-1 Battery settings

Setting	Default	Range
Battery type	VRLA	VRLA or lithium: keep VRLA
Number of blocks	40 × 12 V per string (20 each side of the neutral)	40: do not change. The menu accepts 30–50 for external strings; the internal battery has 40
Capacity	**54 Ah**: 9 Ah × 6 strings (42 Ah with 7 Ah blocks)	Capacity = Ah of one 12 V block × number of strings. C in the charge and EOD settings is this capacity: C = 54 A
Float charge voltage (VRLA)	2.25 V/cell (540 V DC)	2.20–2.35 V/cell; the menu stops below 2.5 V/cell
Boost charge voltage (VRLA)	2.30 V/cell (552 V DC)	2.30–2.45 V/cell (up to 588 V DC); the menu stops below 2.5 V/cell
Temperature compensation	−1.7 mV/°F/cell (−3.0 mV/°C/cell), with the battery sensor	0 to −2.8 mV/°F/cell (0 to −5.0 mV/°C/cell)
End of discharge at 0.6 C	1.65 V/cell	1.60–1.75 V/cell; the menu stops below 2.0 V/cell
End of discharge at 0.15 C	1.75 V/cell	1.65–1.80 V/cell
Charge current	0.1 C best: 5.4 A for 54 Ah	0.2 C maximum: 10.8 A

Set every value from the battery maker's data when it differs from these defaults. The end-of-discharge voltage changes linearly between the 0.6 C and the 0.15 C value with the discharge current. Charging is constant current, then constant voltage: the UPS boost-charges the battery to full, then changes to float.

Battery care

- Keep the batteries at 68 °F (20 °C) if you can: battery life halves for every 18 °F (10 °C) above 68 °F (20 °C) (Table 10-3).
- The best charging current is 0.1 C; the discharging current should be 0.05–3 C.
- Avoid deep discharge: a long run on battery at light or no load discharges the battery deeply and shortens its life.
- Use blocks of the same type and specification, connected correctly.
- Check the batteries periodically: look for abnormalities, measure the voltage of each block for balance, and discharge the battery periodically (Section 5.10).

> ⚠ ***WARNING***
>
> Daily inspection is very important. Check regularly that the battery connections are tight and that no battery heats abnormally. Replace a leaking or damaged battery, store it in a container resistant to sulfuric acid and recycle it according to local regulations.

Battery protections

- **Battery Volt Low:** a voltage pre-warning shortly before end of discharge. The time left depends on the load: at full load on the 90 to 150 kVA builds the whole backup time is 3 minutes or less, so the warning can come less than a minute before shutdown. Start orderly shutdowns from the on-battery signal (SNMP-M card or relay OP3), not from this warning. Its threshold is not published: ask AEC.
- **End-of-discharge protection:** below the EOD voltage the inverters stop and the battery is isolated.
- **Battery breaker:** tripped by the UPS at end of discharge or on EPO.

CHAPTER 10

10 Preventive maintenance

The maintenance schedule, component life and battery life.

10.1 Maintenance schedule

TABLE 10-1 Maintenance schedule

Interval	Task
Weekly	Check the home page and **Log**: normal mode, no alarm; load within the capacity with one module out.
Monthly	Check that the front and rear of the cabinet are clear and the fans run; check the room temperature.
Every 3–6 months	Clean or replace the dust filter (more often in dusty rooms); reset the filter timer: **Control › Function › Reset Dust Filter**.
Every 6 months	Battery test: **Control › Test › Battery Test**. Read the battery data in **Cabinet › Battery**.
Yearly	AEC service: inspection of the power connections (tightness, signs of heating), the modules, fans and capacitors; battery measurement; firmware check.
3–5 years	Replace the VRLA batteries as a full set (24 trays).

10.2 Component life

Some components wear with time and heat. Planned replacement, before they fail, keeps the UPS available.

TABLE 10-2 Typical service life of the components at 77 °F (25 °C)

Component	Typical life	Action
Cooling fans	5–7 years	Replace when worn or at the end of the period; a failed fan raises an alarm.
DC bus electrolytic capacitors	7–10 years	Replaced by AEC service.
AC filter capacitors	5–7 years	Replaced by AEC service.
VRLA batteries (5-year design life)	3–5 years at 68 °F (20 °C)	Replace as a full set (Chapter 9); shorter in a warmer room (Table 10-3).
Dust filter	3–6 months	Check and clean or replace; more often in dusty rooms.

Life is shorter at higher temperature, in dusty rooms and under continuous heavy load. The figures are typical for online UPS; AEC service plans the replacement during preventive maintenance.

10.3 Battery life and temperature

VRLA batteries age faster in heat. Their nominal temperature is 68 °F (20 °C), and their service life halves for every 18 °F (10 °C) above it. Table 10-3 applies that rule (relative life = 2 to the power of −ΔT ÷ 18 °F).

TABLE 10-3 Typical effect of temperature on VRLA battery life

Average temperature	Relative life	Typical life
68 °F (20 °C)	100 %	3–5 years
77 °F (25 °C)	about 70 %	2–3.5 years
86 °F (30 °C)	about 50 %	1.5–2.5 years
95 °F (35 °C)	about 35 %	1–1.8 years
104 °F (40 °C)	about 25 %	9–15 months

CHAPTER 11

11 Troubleshooting

The indicators and buzzer, what to do first, and the list of UPS events.

✓ TIP WhatsApp and phone +1 786 553 2100, always available · e-mail service.us@aecups.com. Send the model, the serial number and a photo of the display and of the alarm: it is the fastest way to a solution.

11.1 Indicators and buzzer

The status indicator and the buzzer are described in Table 6-1 (Figure 6-1): green is normal, yellow a warning, red a failure; two short beeps and one long mean a general alarm, a continuous tone a serious fault.

11.2 What to do first

1. Silence the buzzer with the speaker icon.
2. Open **Log**: note the events with their date and time.
3. Look each event up in Section 11.3 and do what it says.
4. After the cause is removed, clear a fault with **Control › Function › Fault Clear**.
5. If the fault remains, call AEC service with the model, serial number, the events and the load.

11.3 UPS event log

TABLE 11-1 UPS events

Event	Meaning and action
Fault Clear	A fault was cleared by hand.
Log Clear	The history log was cleared by hand.
Load On UPS	The inverter feeds the load.
Load On Bypass	The bypass feeds the load.
No Load	No load on the output.
Battery Boost	The charger is in boost charge.
Battery Float	The charger is in float charge.
Battery Discharge	The battery is discharging.
Battery Connected	The battery is connected.
Battery Not Connected	The battery is not connected: check the battery breaker and the tray connections.
Maintenance CB Closed	The maintenance bypass breaker is closed.
Maintenance CB Open	The maintenance bypass breaker is open.

Event	Meaning and action
EPO	Emergency power off.
Module On Less	The capacity of the running power modules is less than the load: reduce the load or add modules so that the UPS has enough capacity.
Generator Input	A generator is connected: the signal reaches the UPS on the dry-contact input.
Utility Abnormal	Utility voltage or frequency outside the limits, so the rectifier shuts down: check the input voltage.
Bypass Sequence Error	Bypass phase sequence reversed: check that the input power cables are connected correctly.
Bypass Volt Abnormal	Bypass voltage or frequency outside the limits; it resets when the bypass returns to normal. First clear related alarms (Bypass Sequence Error, Input Neutral Lost). Check the bypass supply; if it recurs, AEC service can widen the bypass window.
Bypass Module Fail	Bypass module fault, or bypass fans failed; latched until power-off. Call AEC service.
Bypass Module Over Load	Bypass current above the limit (below 125 % of rating the UPS alarms only).
Bypass Over Load Tout	The bypass overload lasted beyond its time limit (Section 2.10): reduce the load at once and call AEC service.
Byp Freq Over Track	Bypass frequency outside the tracking limit; the inverter does not synchronize. Check the bypass supply.
Exceed Tx Times Lmt	Too many transfers in one hour: the load stays on bypass. It returns to the inverter within one hour, or clear the fault by hand. Check the load.
Output Short Circuit	Output short circuit: check the loads, the output cables and the output terminals; then clear the fault.
Battery EOD	Inverter off at end of discharge: restore the utility.
Battery Test	The UPS runs on battery for 20 s to check the battery.
Battery Test OK	Battery test passed.
Battery Maintenance	The UPS runs on battery down to 1.1 × end-of-discharge voltage to maintain the battery.
Battery Maintenance OK	Battery maintenance completed.
Module Inserted	A power module was inserted.
Module Exit	A power module was pulled out.
Rectifier Fail	Rectifier of module N# failed: the rectifier stops and that module runs from the battery. Call AEC service.
Inverter Fail	Inverter of module N# failed: the load moves to bypass or to the other modules. Call AEC service.
Rectifier Over Temp.	Rectifier of module N# too hot: the rectifier shuts down and restarts when it cools. Check the room temperature, the ventilation, the fans and the input voltage.
Fan Fail	At least one fan of module N# failed.
Output Over Load	Module N# above 100 % of its rating; resets when the load is reduced. Check the load per phase; in a parallel system, check the load balance.

Event	Meaning and action
Inverter Overload Tout	The overload of module N# lasted too long: the load moves to bypass, and back to the inverter 2 minutes after the load falls below 95 %.
Inverter Over Temp.	Inverter of module N# too hot: the load moves to bypass. Check the room temperature, the ventilation and the fans.
On UPS Inhibited	Transfer from bypass to inverter blocked: module capacity too small for the load, the rectifier not ready, or the bypass voltage abnormal.
Manual Transfer Byp	Transferred to bypass by hand.
Esc Manual Bypass	The manual transfer to bypass was cancelled.
Battery Volt Low	Battery voltage low: end of discharge is near. At high load it can be less than a minute away: shut the loads down now (Chapter 9).
Battery Reverse	Battery cables connected the wrong way.
Inverter Protect	Inverter of module N# protected: inverter voltage abnormal or out of step with the other modules.
Input Neutral Lost	Input neutral lost or not detected. A 3-pole breaker is recommended between the supply and the UPS.
Bypass Fan Fail	At least one fan of the bypass module failed.
Manual Shutdown	Module N# switched off by hand: rectifier and inverter off, no output from it.
Manual Boost Charge	The charger was forced into boost charge.
Manual Float Charge	The charger was forced into float charge.
UPS Locked	Manual shutdown of power modules is not allowed.
Parallel Cable Error	Parallel cable missing, loose or not in a ring: check the parallel cables.
Lost N+X Redundant	No redundant module left: the load needs every running module.
EOD Sys Inhibited	Output inhibited after end of discharge, until the utility returns.
Battery Test Fail	Battery test failed: check that the UPS has no alarm and that the battery is above 90 % of float voltage.
Battery Maintenance Fail	Battery maintenance failed: check that the UPS has no alarm, that the battery is above 90 % of float voltage and that the load is above 25 %.
Ambient Over Temp	Room temperature above the UPS limit: air conditioning is needed.
REC CAN Fail	Rectifier communication bus abnormal: check the communication cables.
INV IO CAN Fail	Inverter signal bus abnormal: check the communication cables.
INV DATA CAN Fail	Inverter data bus abnormal: check the communication cables.
Power Share Fail	Output current of the modules out of balance: AEC service adjusts the module output voltage.
Sync Pulse Fail	Synchronization signal between modules abnormal: check the communication cables.

Event	Meaning and action
Input Volt Detect Fail	Input voltage of module N# abnormal: check the input cables, fuses and utility.
Battery Volt Detect Fail	Battery voltage abnormal: check the batteries and battery fuses.
Output Volt Fail	Output voltage abnormal.
Bypass Volt Detect Fail	Bypass voltage abnormal: check the upstream bypass breaker and the bypass cables.
INV Bridge Fail	Inverter IGBTs broken or open. Call AEC service.
Outlet Temp Error	Outlet temperature of a module above the limit: check the fans, the air path and the room temperature. Call AEC service.
Input Curr Unbalance	Input currents differ by more than 40 % of rating between phases: check the input voltage. Call AEC service.
DC Bus Over Volt	DC bus capacitor voltage too high: rectifier and inverter shut down.
REC Soft Start Fail	DC bus voltage too low after soft start. Call AEC service.
Relay Connect Fail	Inverter relays open or fuses broken.
Relay Short Circuit	Inverter relays shorted.
PWM Sync Fail	PWM synchronizing signal abnormal.
Intelligent Sleep	Module sleep active: modules stand by in turn at part load and wake when the load grows.
Manual Transfer to INV	Transferred to the inverter by hand (used when the bypass frequency is out of tracking range; the transfer can interrupt the output for 20 ms or more).
Input Over Curr Tout	Input over current for too long: the UPS moves to battery. Check whether the input voltage is low and the load high.
No Inlet Temp. Sensor	Inlet temperature sensor not connected correctly.
No Outlet Temp. Sensor	Outlet temperature sensor not connected correctly.
Inlet Over Temp.	Inlet air too hot: keep the room within 32–104 °F (0–40 °C).
Capacitor Time Reset	The DC bus capacitor timer was reset.
Fan Time Reset	The fan timer was reset.
Battery History Reset	The battery history was reset.
Byp Fan Time Reset	The bypass fan timer was reset.
Battery Over Temp.	Battery too hot (with the optional battery sensor).
Bypass Fan Expired	Service life of the bypass fans reached: replace them, then reset the timer.
Capacitor Expired	Service life of the capacitors reached: replace them, then reset the timer.

Event	Meaning and action
Fan Expired	Service life of the module fans reached: replace them, then reset the timer.
INV IGBT Driver Block	Inverter IGBTs stopped: check that the power modules are fully inserted. Call AEC service.
Battery Expired	Service life of the batteries reached: replace them, then reset the timer.
Bypass CAN Fail	Communication bus between the bypass module and the cabinet abnormal: check the connector and signal cable.
Dust Filter Expired	The dust filter must be cleaned or replaced; then reset the timer.
Stop Test	Battery test or maintenance stopped by hand: the UPS returns to normal mode.
Wave Trigger	A waveform was saved when the UPS failed.
Firmware Error	Reserved to AEC service. Call AEC service.
System Setting Error	Reserved to AEC service. Call AEC service.
Bypass Over Temp.	Bypass module too hot: check the bypass load, the room temperature (below 104 °F / 40 °C) and the bypass fans.
Module ID Duplicate	Two modules have the same ID: call AEC service to set the IDs in sequence.

12

CHAPTER 12

Specifications

Electrical, mechanical and environmental data of the CIRRO-IB 30–150 kVA. Subject to change without notice.

TABLE 12-1 CIRRO-IB 30–150 kVA specifications

Item	Value
Ratings	30, 60, 90, 120, 150 kVA (150 kVA cabinet, 1 to 5 × 30 kVA modules) · output power factor 1 (kVA = kW)
Input	
Connection · voltage	3 phases + N + PE · 480 V L-L (277 V L-N), neutral shared with the bypass input
Voltage range	384–528 V L-L at full load; 288–384 V L-L with the power derated to 75 %
Frequency · power factor · THD	60 Hz (50 Hz as a setting); range 40–70 Hz · > 0.99 · ≤ 3 %
Maximum input current	45 A per module: 45 / 90 / 135 / 180 / 225 A for 30 / 60 / 90 / 120 / 150 kVA (Table 4-3)
Bypass	
Voltage · current	480 V L-L, 277 V L-N, 4-wire, same neutral as the main input · 36 to 180 A rated
Voltage window	Upper limit +10, +15 or +20 %; lower limit −10, −15, −20, −30 or −40 % (default +15 % / −20 %)
Frequency window	±1, ±3 or ±5 Hz, settable
Overload	110 % continuous · 110–125 % 5 min · 125–150 % 1 min · > 150 % 1 s
Neutral current rating	1.7 × rated current
Output	
Voltage · frequency	480 V L-L, 277 V L-N, 3 phases + N · 60 Hz (50 Hz as a setting) ± 0.1 %
THD	≤ 1 % linear load, ≤ 5 % non-linear load
Inverter overload	110 % 1 h · 125 % 10 min · 150 % 1 min · > 150 % 200 ms
Rated output current	36 A per module: 36 / 72 / 108 / 144 / 180 A
Transfer time	0 ms synchronized; < 3/4 cycle (12.5 ms) not synchronized; < 10 ms from ECO
Efficiency	Up to 96 %, double conversion and battery mode
Heat at full load	4,270 / 8,530 / 12,800 / 17,060 / 21,330 BTU/h for 30 / 60 / 90 / 120 / 150 kVA (calculated at 96 %, Table 3-2); airflow: ask AEC
Short-circuit rating	SCCR / withstand, inverter fault current, earth leakage current: ask AEC (Table 3-3)
Battery	
Type · blocks	Internal VRLA · 240 × 12 V 9 Ah (7 Ah option) in 24 trays · 6 strings of 40 blocks, neutral at the midpoint · capacity setting 54 Ah (42 Ah with 7 Ah)
Bus voltage	±240 V DC nominal (480 V DC between BAT+ and BAT−); 540 V DC float, 552 V DC boost, 588 V DC at the highest boost setting

Item	Value
Charge	Float 2.25 V/cell (2.20–2.35); boost 2.30 V/cell (2.30–2.45); constant current / constant voltage; 0.1 C best, 0.2 C max.
End of discharge	1.65 V/cell at 0.6 C (1.60–1.75); 1.75 V/cell at 0.15 C (1.65–1.80)
Temperature compensation	−3.0 mV/°C/cell (0 to −5.0)
Maximum battery current	321 A at 150 kVA, 187 A at 90 kVA, at nominal 480 V DC; about 395 A at end of discharge at 150 kW (calculated)
Backup time	Table 2-5
System	
Cabinet	150 kVA (CIRIB-FRAME): 5 slots, 616 lb (279.4 kg) empty, with input, output, maintenance bypass (225 A) and battery breakers
Module	CIRIB-PWR-30, 30 kVA, 2U, 17.3 × 26.7 × 3.3 in (440 × 678 × 85 mm), 50.7 lb (23 kg)
Display · communication	7-inch color touchscreen, status indicator, EPO · RS-232, RS-485, USB, dry contacts (3 inputs, 4 outputs), SNMP slot, intelligent slot, remote EPO · AS400 interface (option)
Parallel	Up to 3 cabinets; Cabinet ID 0, 1, 2
Environment	32–104 °F (0–40 °C) · 0–95 % RH · IP20 · full power to 4,900 ft (1,500 m), −1 % per 490 ft (150 m) up to 6,560 ft (2,000 m), above it consult AEC · < 65 dB
Storage	UPS −40 to 158 °F (−40 to 70 °C)
W × D × H	23.6 × 39.4 × 78.7 in (600 × 1,000 × 2,000 mm)
Weight · floor load	150 kVA cabinet with 240 blocks: 2,190.5 lb (30 kVA) to 2,393.3 lb (150 kVA) (Table 2-2) · up to 371 lb/ft² (1,809 kg/m²), about 598 lb (271 kg) per anchor bolt (calculated)
Color	Black
Standards	UL 1778 standard; IEC 62040-2 EMC Category C3; FCC Part 15, Class A
Warranty	3 years on the UPS · 2 years on the VRLA batteries

APPENDIX A

A Parallel setting

Setting the cabinets of a parallel system on the touchscreen.

1. When all parallel cables and power cables are connected, set each cabinet on the touchscreen: **Set › Sys Set** (Figure 6-10) — **System Mode** Parallel (or Parallel ECO / Parallel LBS).
2. Set **United Number** to the number of cabinets in the system (2 or 3).
3. Give each cabinet its own **Cabinet ID**, starting from 0: 0 and 1 for two cabinets; 0, 1 and 2 for three. Two cabinets must never have the same ID.
4. Every other setting must be the same on all cabinets. Then start the system.

B

APPENDIX B

Drawings

AEC drawings of the CIRRO-IB 30–150 kVA, revision 001. Dimensions in inches [mm].

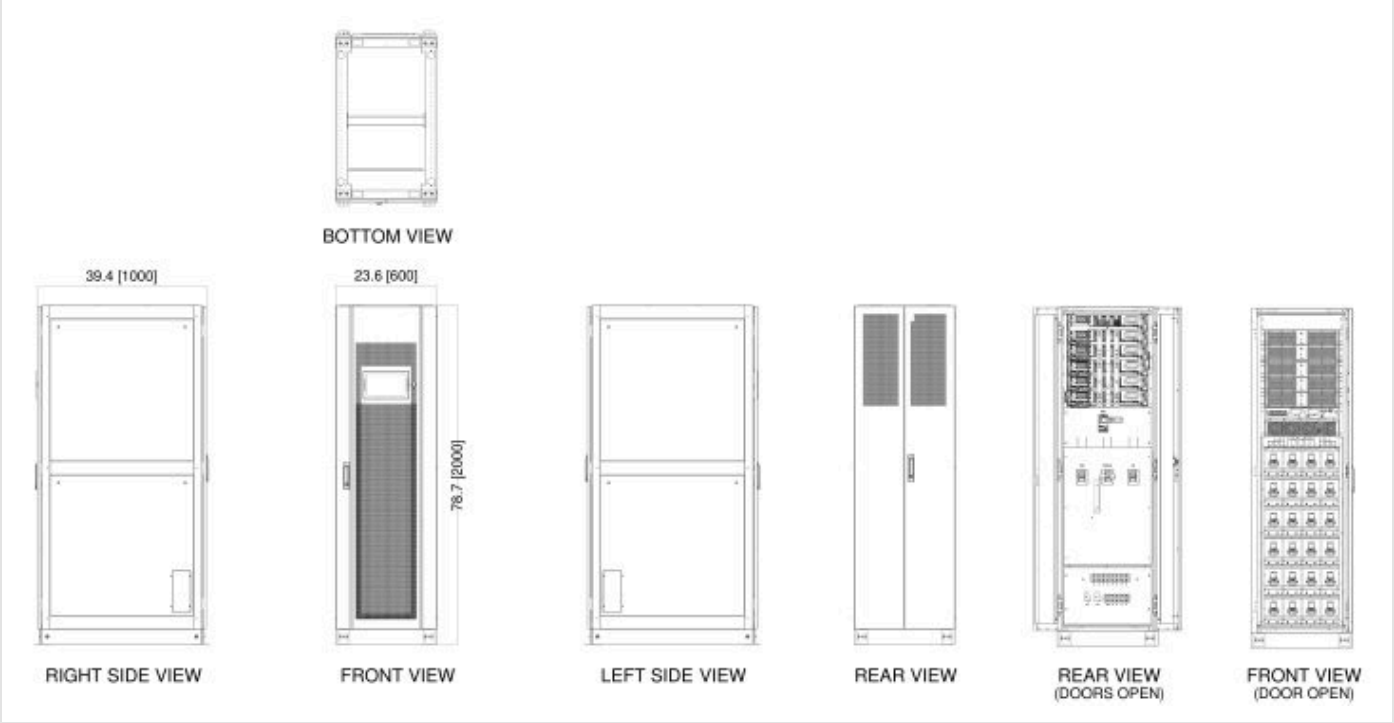

FIGURE B-1 Appearance: right side, front, left side, rear, rear with the doors open, front with the door open, bottom and top views (150 kVA cabinet)

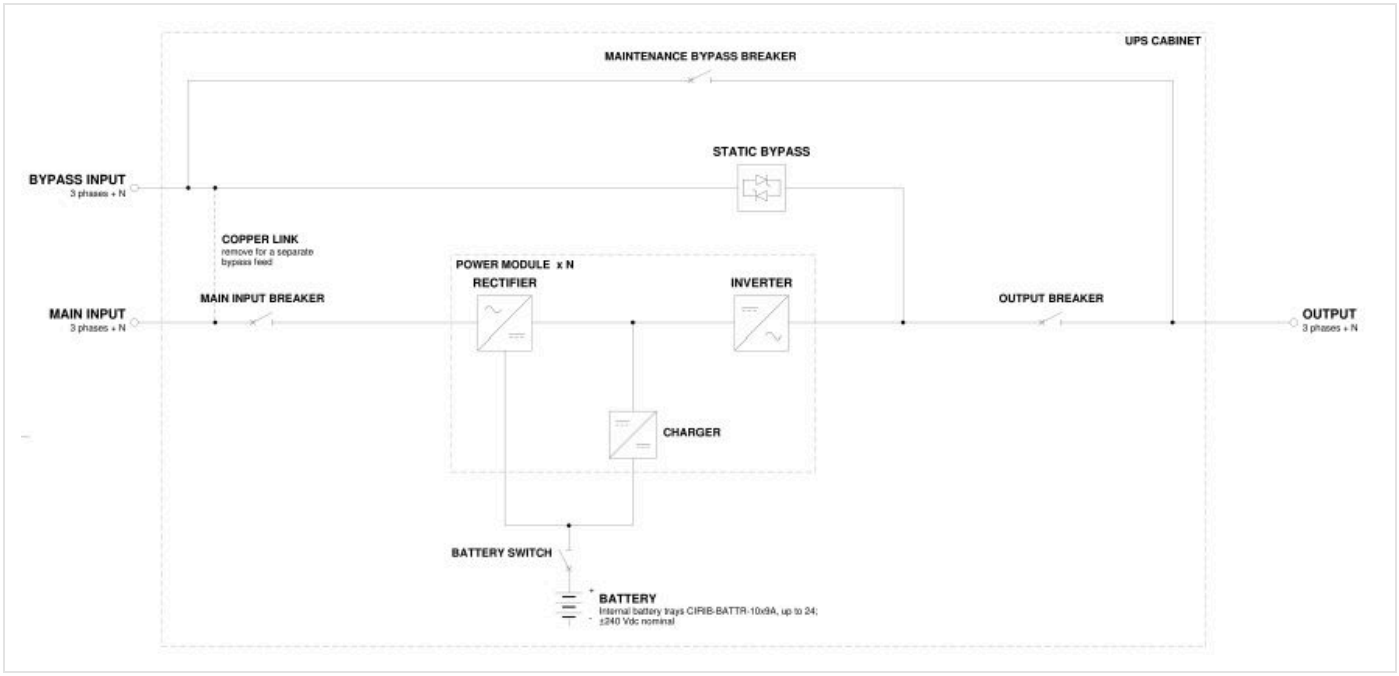

FIGURE B-2 Single-line diagram: 480 V 3-phase 4-wire, 1 to 5 power modules of 30 kVA on the same input, output and battery; main input, output, maintenance bypass and battery breakers in the cabinet; internal battery ±240 V DC nominal

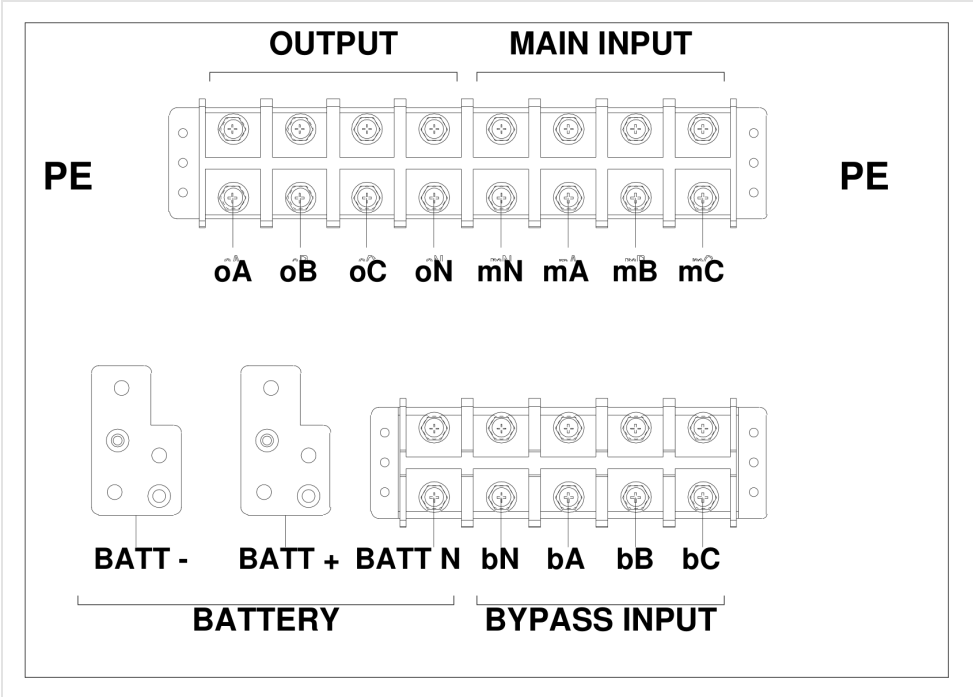

FIGURE B-3 Terminal positions, rear view with the cover removed; M10 bolts, two per pole; terminals about 11 to 17 in (270 to 420 mm) above the floor

C

APPENDIX C

Quick reference

The touchscreen paths for everyday tasks.

TABLE C-1 Quick reference — touchscreen

Task	How
Start or stop the inverter	**Control › Function › ON/OFF Control**
Transfer to bypass	**Control › Function › Manual Bypass**
Return to the inverter	**Control › Function › Ecs Manual Bypass** (or **Manual Transfer to Inverter**)
Enable the module OFF pinholes	**Control › Function › Module Button Power Enable**
Silence the buzzer	Speaker icon, top right
Alarms and events	**Log**
Clear a fault	**Control › Function › Fault Clear**
Battery test	**Control › Test › Battery Test** · **Stop Test**
Battery status and remaining time	**Cabinet › Battery**
Load per phase	**Cabinet › Load**
One power module	**Module** — select it in the list
Battery set-up	**Set › BATT Set**
Single / parallel / ECO / redundancy	**Set › Sys Set**
Network address of the display	**Set › NetWork**
Serial ports	**Set › Comm Set**
Date, time, serial number	**Set › Sys Func**
Waveforms	**Scope**
Emergency stop	EPO button on the front

D

APPENDIX D

Frequently asked questions

Short answers to the questions AEC support hears most.

TABLE D-1 Frequently asked questions

Question	Answer
Can I add power modules later?	Yes, up to five. The 30 kVA modules are hot-swappable: insert them in free slots with the UPS running, then set the system in **Set › Sys Set** (AEC service recommended). Size the breakers and cables for the final build (Table 4-3).
What does N+1 mean?	One module more than the load needs: if any module fails, the others carry the load with no interruption.
Can I remove a module while the UPS runs?	Yes, if the remaining modules can carry the load. Follow Section 5.9.
Is the output a pure sine wave?	Yes. The UPS is online double conversion: the inverter builds a regulated sine wave at all times.
What happens when the battery runs out?	The UPS switches its output off at the end of discharge, and restarts and recharges when the utility returns (auto restart).
What is ECO mode?	The load runs on the bypass while the utility is good: efficiency is higher, but the load is not protected from disturbances. Use normal online mode for critical loads.
Can the UPS run from a generator?	Yes — see Section 3.3.
Who may change the settings?	Only trained personnel: settings and controls are protected by login.
How do I monitor the UPS on the network?	With the SNMP-M card in the SNMP slot — see Section 8.1.
How long does the battery last?	See Table 2-5 for the runtime. The batteries last 3–5 years at 68 °F (20 °C), less in a warmer room (Section 10.3).

E

APPENDIX E

Installation record

Fill this record in at commissioning and keep it with the UPS.

TABLE E-1 Installation record

Item	Value
Model, ordering code	
Serial number	
Installation and commissioning date	
Commissioned by (company, engineer)	
Site and room	
Number of power modules · redundancy (N+X)	
Main input, bypass and output breakers, conductor sizes	
Battery: trays, blocks per string, strings, capacity (Ah)	
Battery settings (BATT Set) checked	
System mode (single, parallel, ECO) · Cabinet ID	
Display network address · SNMP-M address	
Load at commissioning (kW, %)	
Battery test result and date	

F

APPENDIX F

Warranty

What the CIRRO-IB warranty covers.

TABLE F-1 Warranty

Item	Coverage
CIRRO-IB UPS	3 years
VRLA batteries	2 years

During the warranty AEC repairs or replaces a faulty product. Keep the purchase invoice. Not covered: transport damage, incorrect installation or use, use outside the conditions of this manual, repairs by anyone not authorized by AEC, and natural events. The sales contract prevails.

APPENDIX G

Acronyms and abbreviations

The abbreviations used in this manual and on the touchscreen.

TABLE G-1 Acronyms and abbreviations

Term	Meaning
BCB	Battery circuit breaker
ECO	Economy mode: the load on the static bypass
EGC	Equipment grounding conductor
EOD	End of discharge
EPO	Emergency power off
IGBT	Insulated-gate bipolar transistor
LBS	Load bus synchronization (two systems kept in step)
N+X	X redundant modules beyond the N that carry the load
NEC	National Electrical Code (NFPA 70)
PE	Protective earth
RCD	Residual-current (ground-fault) device
THD	Total harmonic distortion
VRLA	Valve-regulated lead-acid (battery)

Service and support

AEC technical support is available 24 hours a day, 7 days a week. For help with installation, start-up, alarms, settings, spare parts, warranty claims and service visits, contact us by WhatsApp, phone or e-mail.

TECHNICAL SUPPORT · 24/7	**+1 786 553 2100**	WhatsApp and phone — always available
SERVICE E-MAIL	**service.us@aecups.com**	Technical questions, service requests, warranty claims
SALES	**sales@aecups.com**	
ADDRESS	**AEC UPS USA LLC**	4872 SW 72nd Ave, Miami, FL 33155
WEB	**aecups.com**	

When you contact us, have ready: the model and ordering code, the serial number (on the rating label and in Set › Sys Func), the alarm or event shown, the load and the battery set-up — a photo of the display and of the label speeds things up on WhatsApp.