AEC
Technology Behind Power

USER MANUAL

CPSS3

1–10 kVA

Central safety power supply system to EN 50171



English

Read this manual before installing and using the CPSS.
Keep it with the CPSS for the periodic tests.

AEC-UM-CPSS3-1-10-EN
Rev. 01 · 11/2026

OVERVIEW

Contents

About this manual 3

1 Safety Description 4

1.1 Safety Instructions 4

1.2 Working Environment Requirements 6

2 Overview 7

2.1 Product Intro 7

2.2 Appearance 8

2.3 Working Principles 15

3 Installation 19

3.1 Unpacking and Checking 19

3.2 Installation Preparation 21

3.3 Electrical Connection 22

4 Operation and Maintenance 27

4.1 Check Before Startup 27

4.2 Startup 27

4.3 Shutdown 27

4.4 Periodic Preventative Maintenance 28

4.5 Battery Maintenance 28

4.6 Maintenance Bypass Mode (Only for UPS with Maintenance Bypass) 28

4.7 Troubleshooting 29

5 Package, Transportation, Storage 31

5.1 Package 31

5.2 Transportation 31

5.3 Storage 31

6 Safety services and EN 50171 32

6.1 What a CPSS supplies 32

6.2 Operating mode 32

6.3 What EN 50171 requires and what the CPSS provides 33

6.4 Settings for safety services 33

6.5 Battery, charger and rated operating time 34

6.6 Installing a safety source 34

6.7 Commissioning, periodic tests and log-book 35

6.8 Labels and documents 36

A Technical Specifications 37

Dimensions and weights 38

B Acronyms and Abbreviations 40

BEFORE YOU START

About this manual

This manual describes the AEC CPSS3 1–10 kVA, a central safety power supply system (CPS) to EN 50171, built on the AEC IST3 1–10 kVA platform. Chapters 1 to 5 cover installation, operation and maintenance, chapter 6 the EN 50171 requirements, Appendix A the CPSS3 data. Keep it with the CPSS for the periodic tests.



1 kVA



2 – 3 kVA



6 – 10 kVA

0.8–8 kW rated output, power factor 0.8	**120 %** constant overload (AEC data)
< 12 h recharge time	**0 ms** no break: mode without interruption

MODELS COVERED

- CPSS3-1K, -2K and -3K: 1, 2 and 3 kVA (800, 1600 and 2400 W), single-phase tower
- CPSS3-6K and CPSS3-10K: 6 and 10 kVA (4800 and 8000 W), single-phase tower
- IST3 long-backup frames: external battery, sized to the rated operating time

WHO THIS MANUAL IS FOR

Installers, electricians, IT and facility staff who install, operate, test and maintain the CPSS. Electrical installation and any work inside the CPSS must be done by qualified personnel, in line with IEC 60364 and the local wiring rules.

> **NOTE**
> In chapters 1 to 5 the CPSS3 is called “the UPS”, as on its display, and its frames take the platform names (1 kVA … 10 kVA UPS). The CPSS3 uses the long-backup models; the standard models with internal battery and their discharge time limit (Section 4.5) are not CPSS3. Output power factor 0.8: kW = 0.8 × kVA; the CPSS3 ratings are in Appendix A.

Safety messages

Safety messages in this manual follow ISO 3864 / ANSI Z535. The signal word tells how serious the hazard is.

DANGER	A hazardous situation which, if not avoided, **will** result in death or serious injury.
WARNING	A hazardous situation which, if not avoided, **could** result in death or serious injury.
CAUTION	A hazardous situation which, if not avoided, could result in minor or moderate injury, or in damage to the equipment.
NOTE	Additional information that stresses or completes the text.
TIP	A hint that helps you solve a problem or save time.

Numbers in red circles on a picture are explained in the table or list that follows it. References in red, such as Figure 2-1 or Table 3-1, are links in the PDF. Figures are for reference only: the actual product may differ in detail.

Up and running

The short version: each step points to the full instructions. Read the safety chapter first.

1. **Read the safety instructions.** See Section 1.1, Safety Instructions.
2. **Choose the place: a fire-protected room for safety services.** See Section 6.6, Installing a safety source.
3. **Unpack and check the delivery.** See Section 3.1, Unpacking and Checking.
4. **Install and connect the CPSS.** See Section 3.3, Electrical Connection.
5. **Start the CPSS.** See Section 4.2, Startup.
6. **Make the settings for safety services.** See Section 6.4, Settings for safety services.
7. **Test and record: monthly and annual tests.** See Section 6.7, Commissioning, periodic tests and log-book.

01

CHAPTER 1

Safety Description

This chapter describes the safety instructions. Before performing any work on the device, read this user manual carefully, follow the operating and installation instructions and observe all danger, warning and safety information, to avoid injury and damage to the device caused by incorrect operation.

IN THIS CHAPTER

1.1 Safety Instructions
1.2 Working Environment Requirements

AT A GLANCE **The safety rules of this chapter**



High voltage inside, also after the UPS is switched off: wait before opening it.



Installation, opening and service by qualified personnel only.



Batteries: never short-circuit them, keep them from fire, use only the specified type.



Electrostatic-sensitive boards: wear an earthed wrist strap.



Earth the UPS before connecting anything else.



No liquids or foreign objects inside the UPS.



In case of fire use a dry-powder extinguisher, never water or liquid.



Keep the air inlets and outlets free; respect the clearances.

1.1 Safety Instructions

This section describes the safety instructions for operation and maintenance. For details, refer to the safety information in the relevant chapters.

CAUTION

Before using the UPS, read the safety and operating instructions in this section carefully to avoid accidents.

The notices in this manual (such as "Danger", "Warning" and "Caution") do not cover all safety instructions. They only supplement the general safety instructions for using the UPS.

NOTE

Any damage to the device caused by violating the general safety requirements or the safety standards for design, production and use is not covered by the warranty.

1.1.1 Instructions for Use

DANGER

High temperatures and high voltages are present inside the UPS. When using the UPS, strictly comply with all warnings and operating instructions on the UPS and in this user manual.

CAUTION

Only authorised professionals may open the UPS chassis, to avoid electric shock. Any UPS failure caused by unauthorised opening is not covered by the warranty.

CAUTION

This UPS is an EMC Class A product. In a residential environment it may cause radio interference; the user may need to take additional measures.

- Ensure that no liquid or other foreign objects enter the UPS.
- The UPS must be properly earthed.
- Before moving, rewiring or servicing the UPS, disconnect all power sources (AC input, battery, etc.). Wait at least 10 minutes after the UPS has been switched off completely before starting work: the output and internal parts may still carry hazardous voltage and cause electric shock.
- When removing a fan, do not put fingers or tools into it until it has stopped rotating, to avoid injury or damage to the device.
- Do not connect unbalanced, half-wave-rectified or inductive loads to the UPS output, such as air conditioners, blowers, motor starters, electric drills, motors or fluorescent lamps.
- In case of fire, use a dry-powder extinguisher. Do not use liquid extinguishers: risk of electric shock.

1.1.2 Battery Safety

CAUTION

Use only the specified battery type. Other batteries can damage the UPS.

- Batteries must be replaced only by authorised professionals. Before working, remove watches, bracelets, rings and other conductive objects, wear insulating shoes and gloves, and use tools with insulated handles.
- Do not put tools or other conductive objects on the battery.
- Never short-circuit the battery positive (+) and negative (-) terminals and never connect the battery with reversed polarity: this can cause fire or electric shock.
- Disconnect the charger before connecting or disconnecting the battery terminals.
- All batteries must be of the same type and model, from the same manufacturer.
- Keep batteries away from fire and from any electrical equipment that may cause sparks, to avoid injury.
- Do not open or damage the batteries. The electrolyte contains hazardous substances such as strong acid, which are harmful to skin and eyes. If electrolyte touches skin or eyes, rinse immediately with plenty of clean water and seek medical attention.
- Dispose of used batteries in accordance with local regulations.

1.1.3 ESD Protection

⚠ CAUTION

To prevent electrostatic discharge from damaging sensitive components (such as circuit boards), wear an anti-static wrist strap with its other end properly earthed before touching them.

1.2 Working Environment Requirements

- Do not install the UPS in direct sunlight, in the rain or in damp environments.
- Do not install the UPS where there is conductive metal dust or near a heater.
- The operating temperature range is -5 °C to +40 °C and the relative humidity range is 0% to 95% RH, non-condensing (recommended: 20 °C to 25 °C and about 50% RH).
- Install the UPS on a level, vibration-free floor with a tilt of less than 5° and keep it well ventilated. Leave a clearance of at least 300 mm to 500 mm between the rear or sides of the UPS and walls or adjacent equipment. Poor ventilation raises the temperature inside the UPS, which shortens the life of its internal components and of the UPS.
- The recommended altitude is below 1000 m. Above 1000 m, the rated power must be derated according to IEC 62040-3.

CHAPTER 2

02 Overview

This chapter describes the features, structure and working principles of the UPS.

IN THIS CHAPTER

2.1 Product Intro
2.2 Appearance
2.3 Working Principles

THE UPS AT A GLANCE



Front: display and keys



Rear: sockets, terminals, breakers, communication



Long-backup model (external batteries)

2.1 Product Intro

The (1K-10K) UPS are high-frequency, true online, double-conversion intelligent UPS. They provide ideal power protection for file servers, enterprise servers, central servers, microcomputers, concentrators, telecom systems, data centres and other equipment that requires high-quality power. They are widely used in key business sectors such as postal services, finance, networks, stock exchanges and railways.

The (1K-10K) UPS have single-phase AC input and single-phase AC output. Each model is available as a standard model and a long backup model.

2.1.1 Features

INTELLIGENT RS232 COMMUNICATION

Through the RS232 data port and the UPS power management software, the computer can monitor the UPS remotely (operating status and electrical data), receive its signals and switch it ON/OFF remotely. An SNMP network adaptor is also supported, which makes the UPS a device on the network.

HIGH INPUT POWER FACTOR

Advanced active PFC (power factor correction) technology reduces the load on the power grid: a new generation of green power.

HIGH COST PERFORMANCE

Several power conversion techniques and high-frequency PWM technology give high efficiency, small size and light weight, improve reliability and reduce cost.

PERFECT PROTECTION

Protection functions include output over-voltage, battery under-voltage, input over-voltage and triple over-current protection. They solve typical problems of high-frequency UPS, such as poor adaptability to the power grid and low surge withstand capability.

LOW MAINS INPUT VOLTAGE

Independent rapid detection technology: on the 1 kVA / 2 kVA / 3kVA UPS the battery does not discharge even at a mains input voltage of 120 V (the lower limit, load below 50%); on the 6 kVA / 10kVA UPS the input range extends down to 80 V with linear load derating. In mains mode all output power is therefore taken from the grid, so the battery stays fully charged, discharge cycles are reduced and battery life is extended.

2.2 Appearance

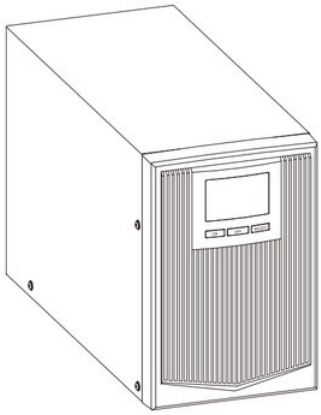

FIGURE 2-1 Appearance of 1kVA UPS standard/ long backup model

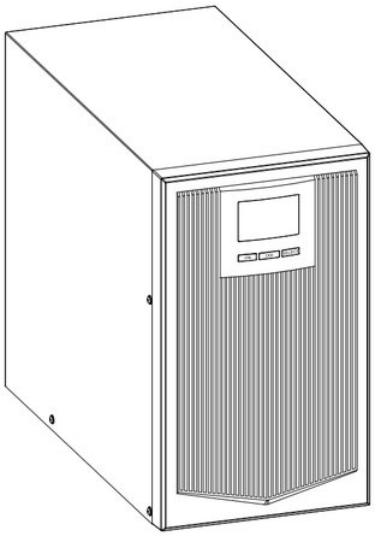

FIGURE 2-2 Appearance of 2kVA/ 3kVA UPS standard/ long backup model

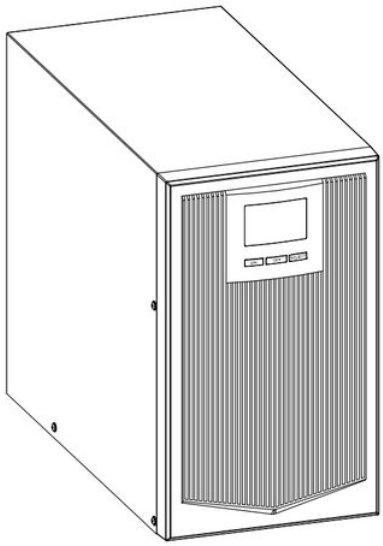

FIGURE 2-3 Appearance of 6kVA/ 10kVA UPS long backup model

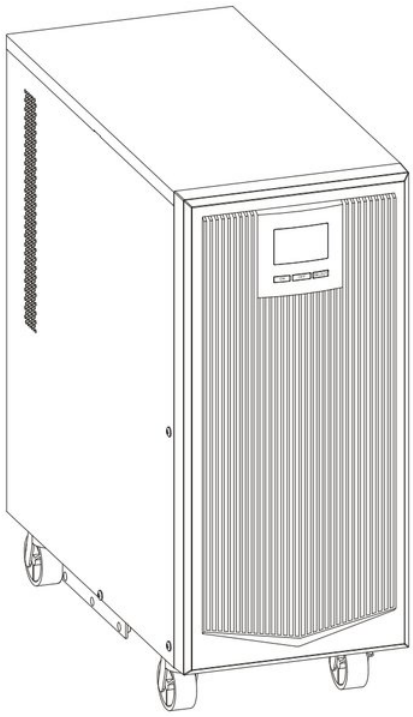

FIGURE 2-4 Appearance of 6kVA/ 10kVA UPS standard model

2.2.1 Operation Panel

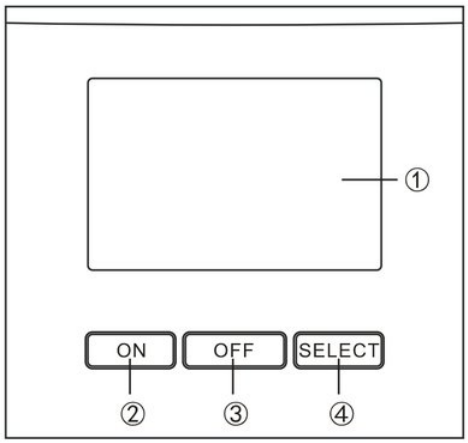

FIGURE 2-5 Operation panel

TABLE 2-1 The illustration of operation panel

No.	Name	Illustration
	LCD	Displays the working status and settings of the UPS.
	ON button	• When the UPS is off, press and hold **ON** for 1 s to switch it on. • When the UPS is on and works in mains mode, press and hold **ON** for 3 s to run a battery test. In battery mode, press and hold **ON** for 3 s to silence the buzzer (mains-abnormal alarm). • On the setting page, press and hold **ON** for 1 s to confirm the setting.
	OFF button	When the UPS is on, press and hold **OFF** for 1 s to switch it off.
	SELECT button	• Press **SELECT** to scroll through the displayed information, such as output voltage, output frequency, input voltage, input frequency, battery voltage, inner temperature, load percentage, fault information, etc. • Press and hold **SELECT** for 5 s to enter the setting page. Then press **SELECT** to scroll through the settings (ECO/INV mode, or inverter output voltage 208/220/230/240 V) and press **ON** to confirm the setting.

LCD PANEL

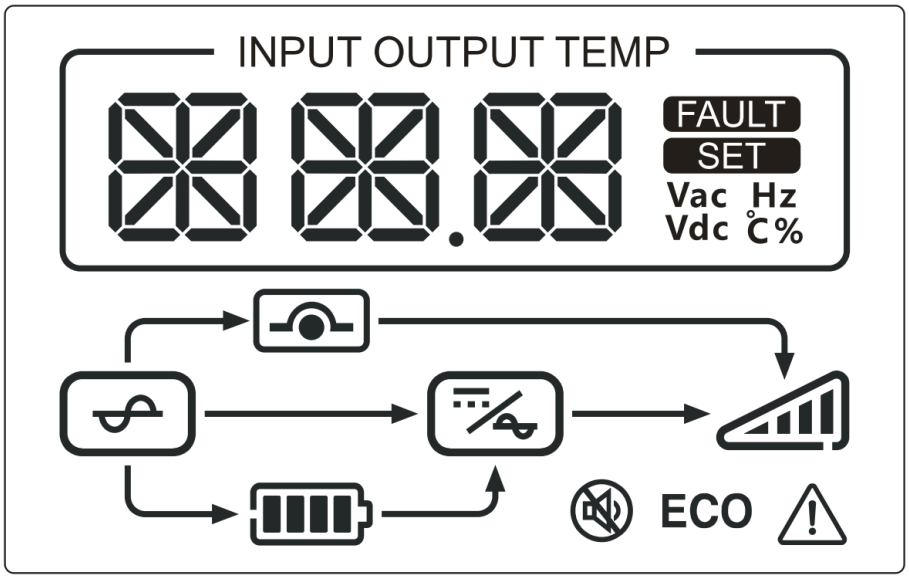

FIGURE 2-6 LCD panel

TABLE 2-2 The illustration of LCD panel

No.	Icon	Illustration
1	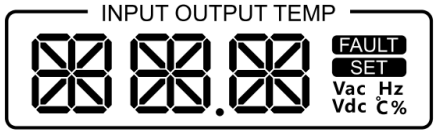	It shows input voltage, input frequency, output voltage, output frequency, load percent, temperature, fault code, parameters or working mode, etc.
2	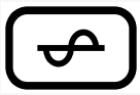	Mains icon ON: Mains input is normal.
3		Bypass icon ON: UPS works in the bypass mode.
4		Battery icon: four energy bars 1. When the energy bars light up repeatedly from left to right, the battery is charging. 2. When all energy bars are on, the battery is fully charged. 3. When all energy bars flash, the battery voltage is too high. 4. When all energy bars are off and the frame flashes, the battery is nearly exhausted.
5		Inverter icon ON: Inverter is working.
6		Load icon: four energy bars 1. The energy bars (from left to right) indicate the load level. 2. When all energy bars flash, the load is too high.
7		Silence icon ON: the buzzer is silenced.
8		ECO mode icon ON: UPS works in the ECO mode.
9		Alarm icon ON: UPS failure.

Display and keys: quick guide

The three keys under the LCD do everything. A key that must be held shows the time on its badge.

QUICK GUIDE **Switch the UPS on and off** Section 4.2 / 4.3

1

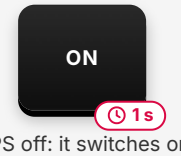

UPS off: it switches on

→

2



UPS on: it switches off

QUICK GUIDE **Read the measurements**

1

SELECT

Each press: the next value on the LCD (output V and Hz, input V and Hz, battery V, temperature, load %, faults)

QUICK GUIDE **Battery test and buzzer**

1

ON 3 s

Mains mode: starts a battery test

→

2

ON 3 s

Battery mode: silences the mains-failure alarm

QUICK GUIDE **Change a setting (ECO / INV, output voltage)** Section 2.3.2

1

SELECT 5 s

Opens the setting page

→

2

SELECT

Scroll: ECO, INV, output 208 / 220 / 230 / 240 V

→

3

ON > 1 s

Saves the setting and leaves the page

No key pressed for 20 s: the UPS leaves the setting page without saving.

2.2.2 Rear Panel View

1KVA UPS

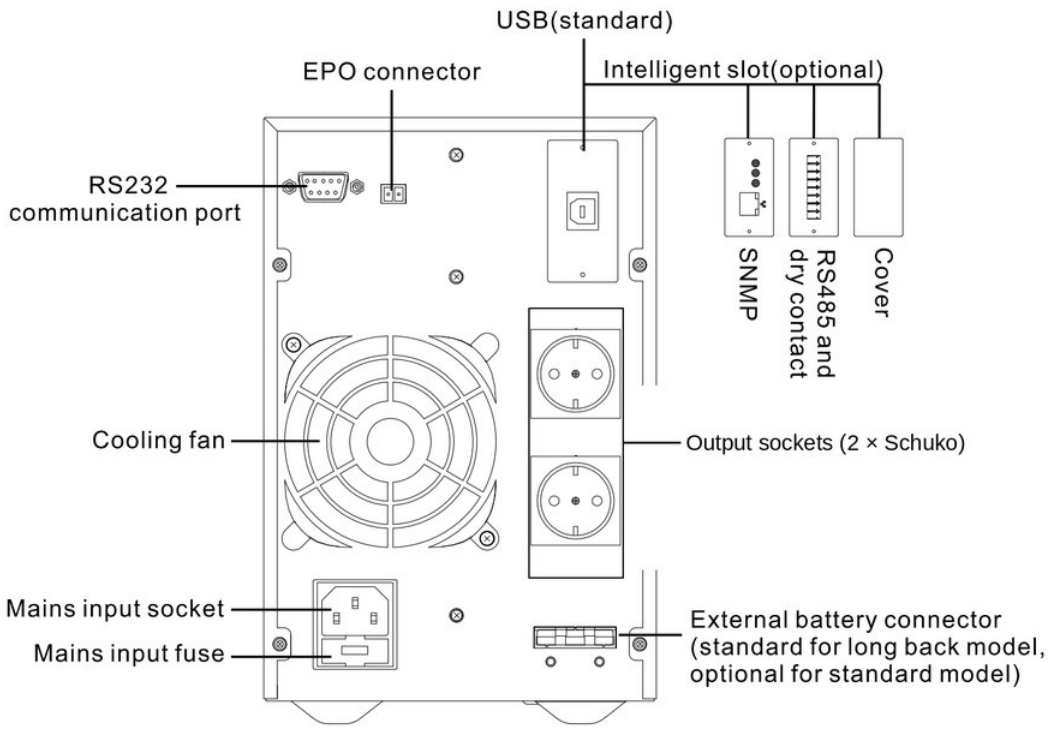

FIGURE 2-7 Rear panel of 1kVA UPS standard/ long backup model

2KVA UPS/ 3KVA UPS

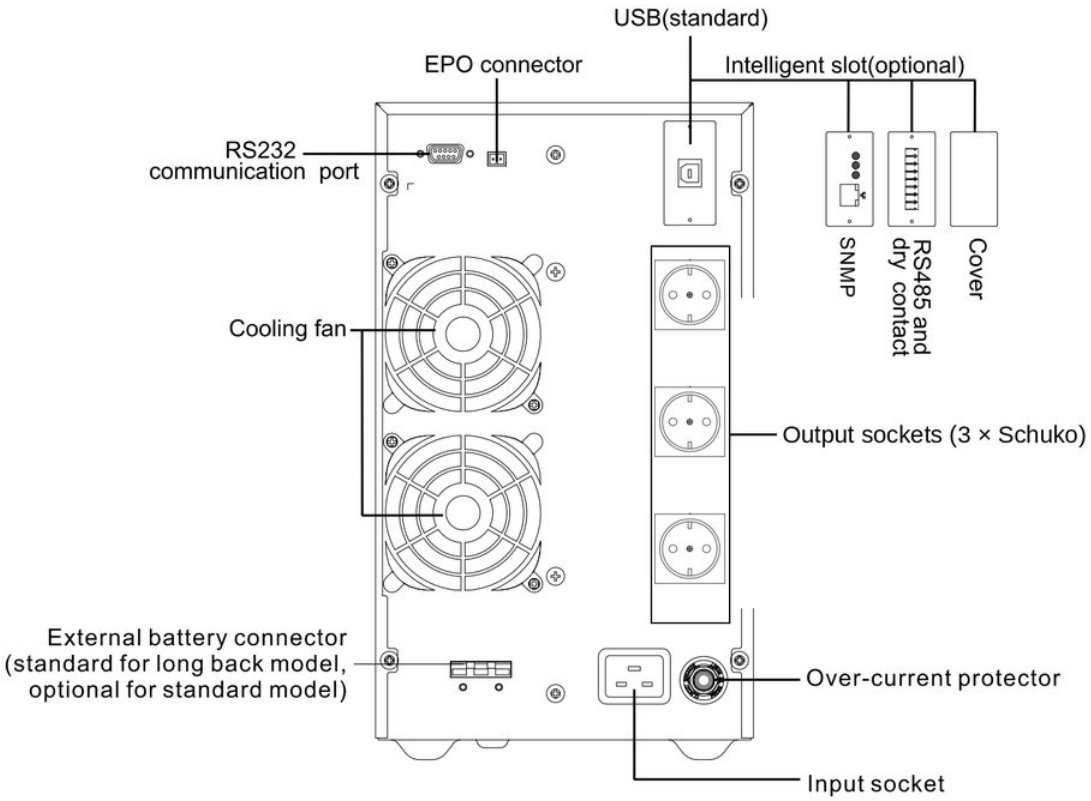

FIGURE 2-8 Rear panel of 2kVA/ 3kVA UPS standard/ long backup model

6KVA UPS/ 10KVA UPS

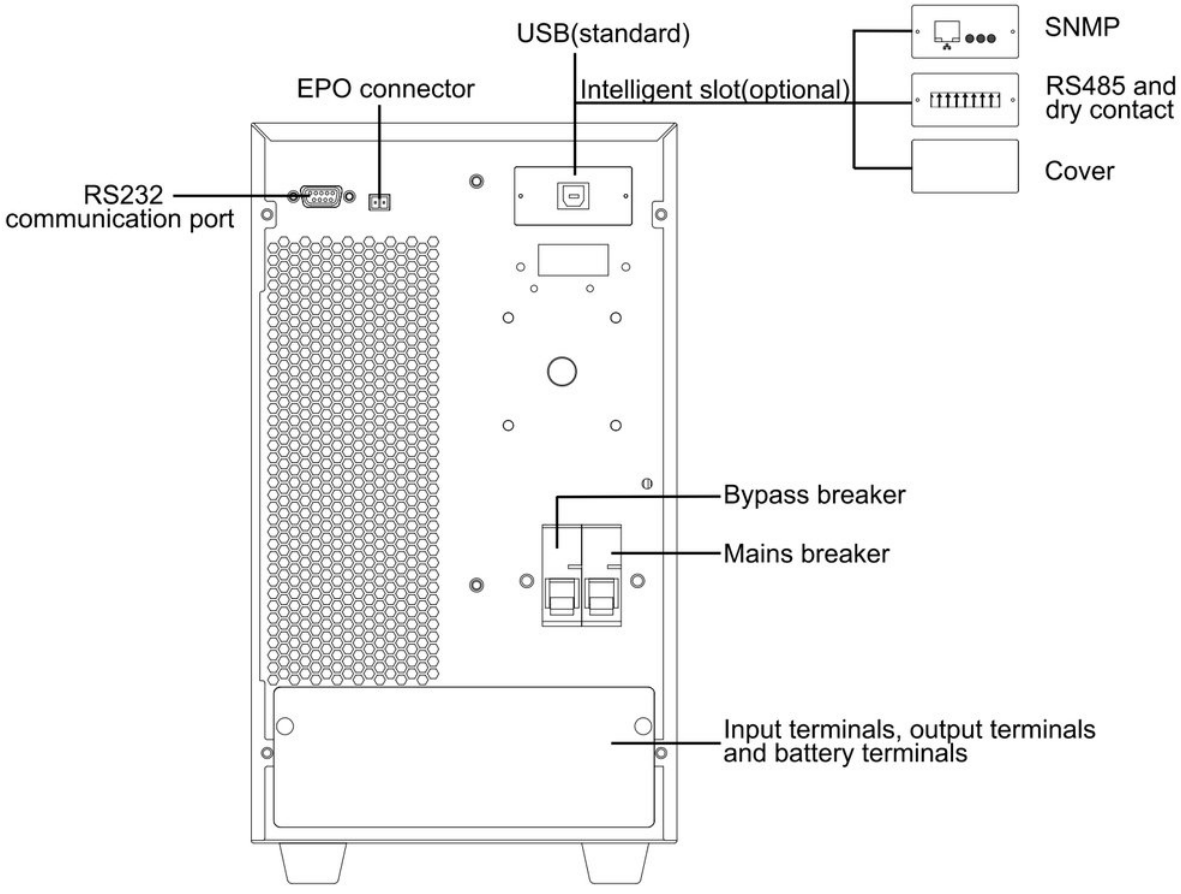

FIGURE 2-9 Rear panel of 6kVA/ 10kVA UPS long backup model

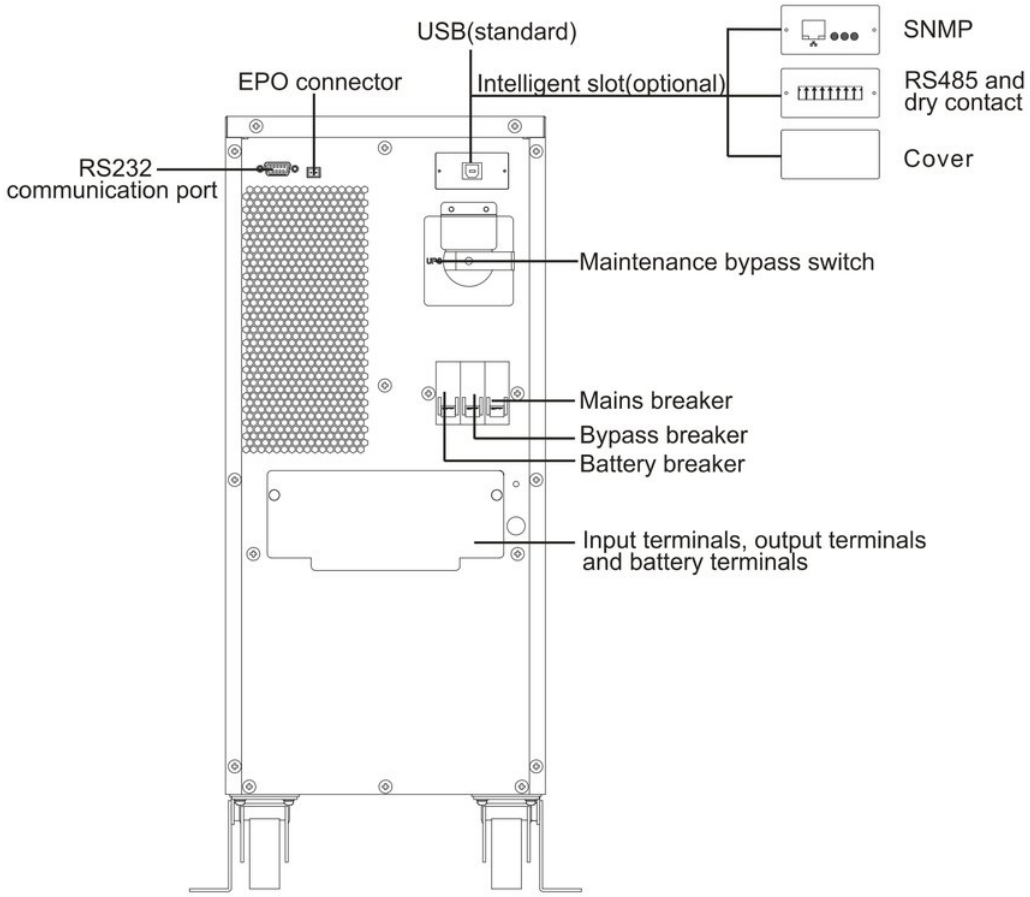

FIGURE 2-10 Rear panel of 6kVA/ 10kVA UPS standard model

NOTE

If the EPO function is not used, keep the EPO port closed (bridged) with the supplied 2-pin jumper terminal. To use the EPO function, remove the jumper terminal and connect the EPO signal input wires.

CAUTION

The EPO input on the rear panel must be closed (bridged) for the UPS to operate.

When the EPO contact opens, the UPS switches off both inverter and bypass output and the LCD shows the EPO fault. To clear the fault, close (bridge) the EPO contact again, switch the UPS off completely and then restart it.

2.2.3 Intelligent Slot

RS485 AND DRY CONTACT (OPTIONAL)

The pin layout and pin definitions of the RS485 and dry-contact card are shown in Figure 2-11 and Figure 2-12.

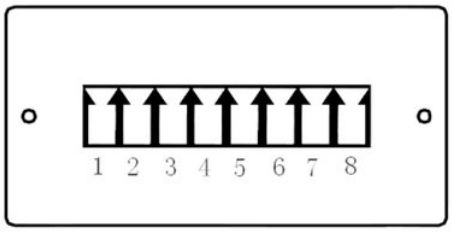

FIGURE 2-11 RS485 and dry contact

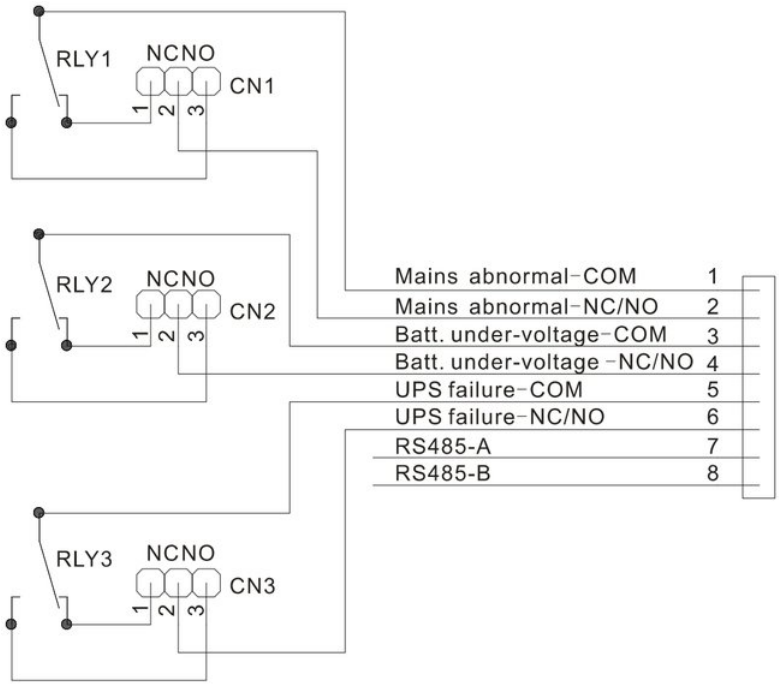

FIGURE 2-12 Pin definition of RS485 and dry contact

Dry-contact details:

1. Jumpers CN1, CN2 and CN3 set each dry-contact output as normally closed (NC) or normally open (NO). The default is NC (pin 1 connected to pin 2). To set an output to NO, connect pin 2 to pin 3.
2. Dry-contact signal requirements: voltage below 60 Vdc or 42 Vac RMS, current below 1.25 A.

2.2.4 EPO Connector

When the two EPO terminals are disconnected (contact open), the UPS switches off its output. To restore the output, close (bridge) the two EPO terminals again, switch the UPS off completely and then restart it.

2.2.5 RS232 Communication

The pin assignment between the UPS RS232 port and the PC RS232 port is shown in Table 2-3.

TABLE 2-3 The corresponding pin relationship between RS232 port of UPS and RS232 port of PC

RS232 port of UPS	RS232 port of PC
9 (3)	2 (receiving end)
6 (2)	3 (transmitting end)
7 (5)	5 (grounding end)

2.3 Working Principles

When the mains is normal, the PFC stage of the (1K-10K) UPS converts the input into a stable ±360 V DC voltage, which supplies the DC/AC inverter to output a stable 230 V AC and charges the battery at the same time. When the mains is abnormal, the DC/DC converter boosts the battery voltage to ±360 V DC for the DC/AC inverter.

The working principle of the (1K-10K) UPS is shown in Figure 2-13. The DC/AC inverter uses a half-bridge topology and the DC/DC converter uses a push-pull or boost circuit. PFC is the active power factor correction circuit.

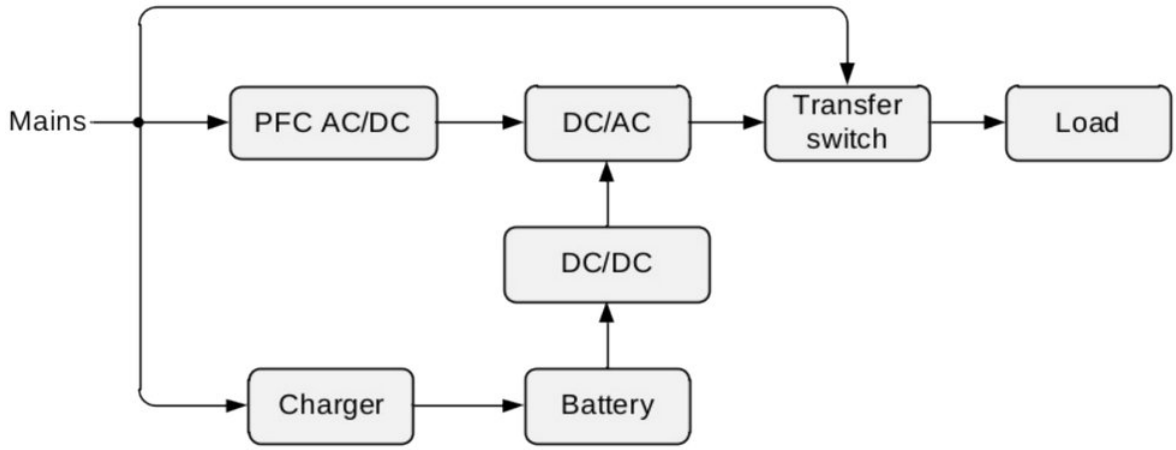

FIGURE 2-13 Working principle

2.3.1 Working Mode

HOW IT WORKS **Operating modes at a glance**

Normal (online) mode

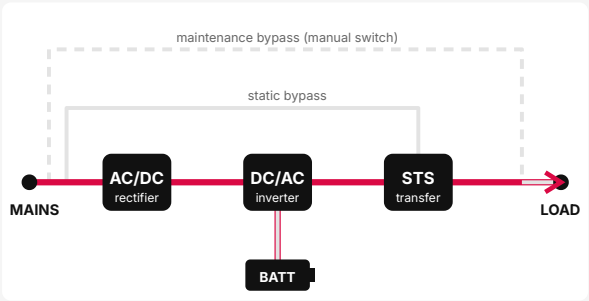

Mains present: the rectifier and the inverter supply the load with regulated power; the battery is kept charged.

Battery mode

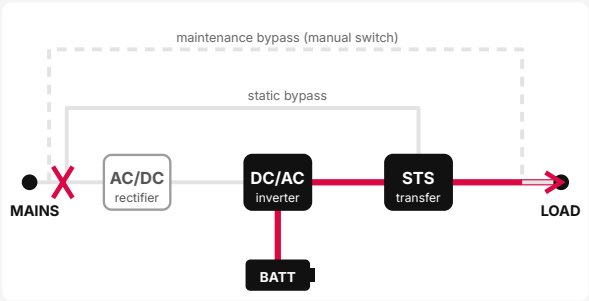

Mains outside its limits or missing: the battery feeds the inverter, with no break for the load.

Bypass mode

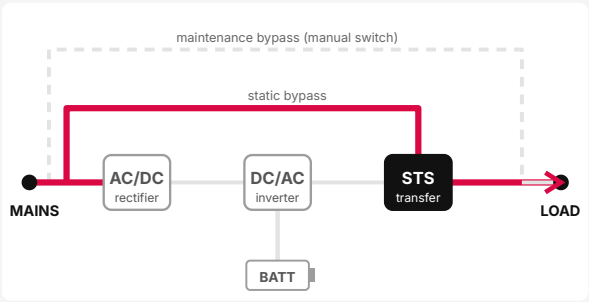

Overload, fault or inverter off: the load is supplied from the mains through the static bypass.

ECO mode

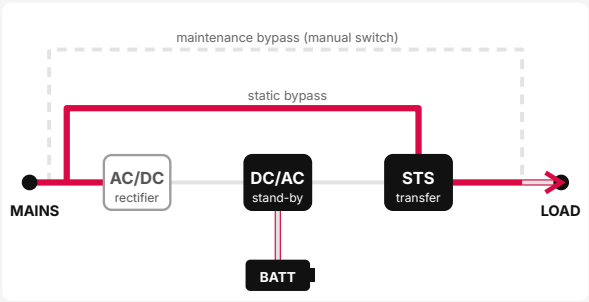

Mains inside the ECO window: the load runs on the bypass for the highest efficiency; the inverter takes over if the mains goes out of range.

Maintenance bypass

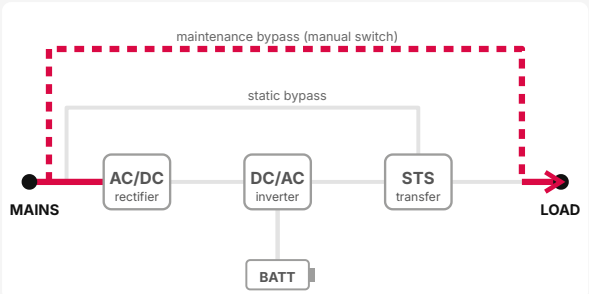

For service: the load is fed from the mains by the manual switch and the UPS can be switched off. Hazardous voltage stays on the terminals.

power flow working idle

Maintenance bypass: 6 kVA / 10 kVA standard models only.

MAINS MODE

When the mains is normal, the UPS works in mains mode and charges the battery. The LCD display is shown in Figure 2-14.

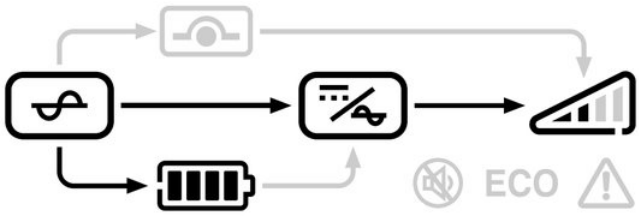

FIGURE 2-14 Mains mode

BYPASS MODE

The UPS works in bypass mode and charges the battery. The LCD display is shown in Figure 2-15.

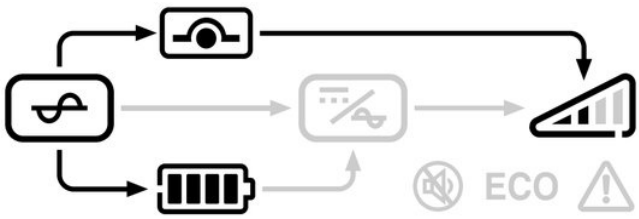

FIGURE 2-15 Bypass mode

BATTERY MODE

When the mains is abnormal, the UPS works in battery mode. The LCD display is shown in Figure 2-16.

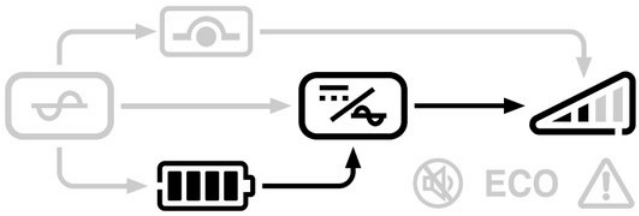

FIGURE 2-16 Battery mode

FAULT STATUS

UPS faults include: EPO protection, busbar voltage fault, IGBT over-temperature fault, fan fault (including fan blocked, fan damage, etc.), output fault (including output overload protection, output short-circuit, etc.), battery fault (including battery over-voltage protection, battery under-voltage protection, etc.), parameter error, charger fault (including charger over-temperature, charger short-circuit, etc.), bypass fault, inner power fault, etc. The corresponding fault screens on the LCD are shown in Figure 2-17 to Figure 2-24.

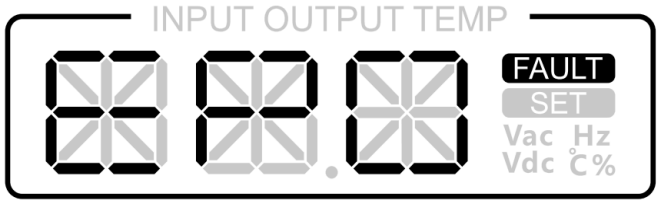

FIGURE 2-17 EPO protection

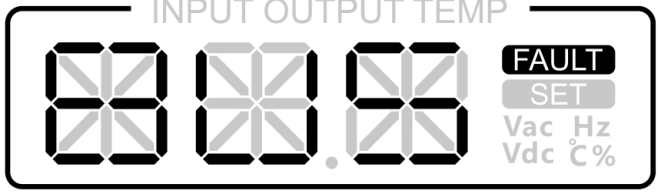

FIGURE 2-18 Busbar voltage fault

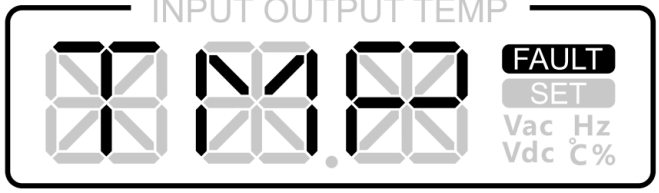

FIGURE 2-19 IGBT over-temperature fault

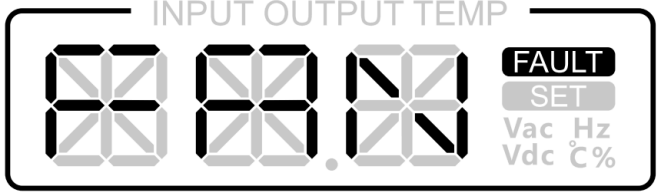

FIGURE 2-20 Fan fault

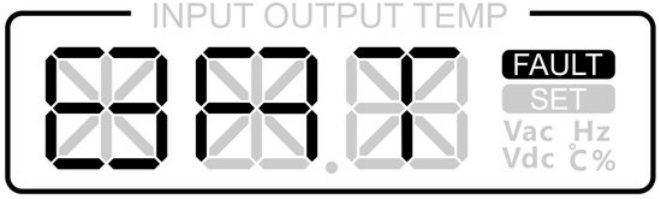

FIGURE 2-21 Battery fault

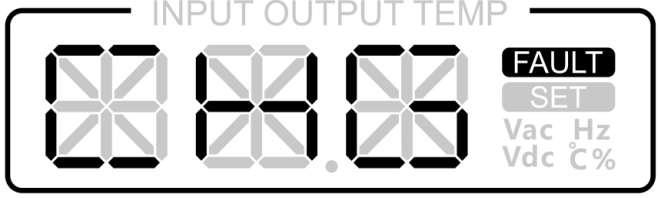

FIGURE 2-22 Charger fault

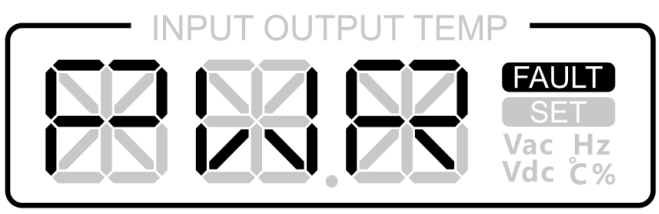

FIGURE 2-23 Inner power fault

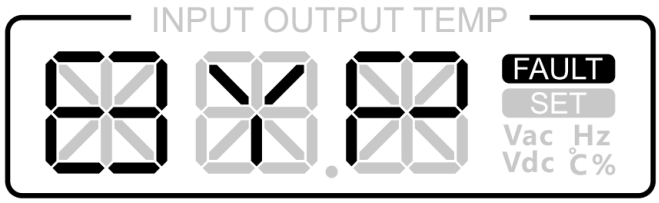

FIGURE 2-24 Bypass fault

2.3.2 UPS Parameters Setting

Press and hold **SELECT** for 5 s to enter the setting page. Then press **SELECT** to scroll through the settings (ECO/INV mode, or inverter output voltage 208/220/230/240 V) and press **ON** to confirm the setting.

ECO MODE

"ECO" setting page: the letters "ECO" flash. To confirm the selection, press and hold **ON** for more than 1 s; the setting is saved and the UPS leaves the setting page. If you do not confirm, the UPS leaves the setting page after 20 s without saving the change. In ECO mode, the LCD display is as shown in Figure 2-25.

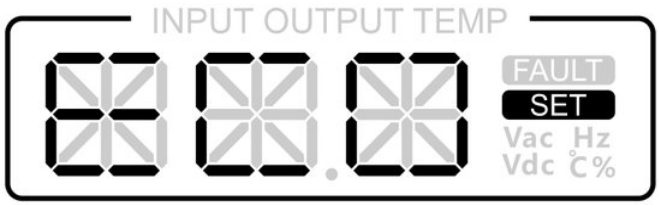

FIGURE 2-25 ECO mode

INV MODE

"INV" setting page: the letters "INV" flash. To confirm the selection, press and hold **ON** for more than 1 s; the setting is saved and the UPS leaves the setting page. If you do not confirm, the UPS leaves the setting page after 20 s without saving the change. In INV mode, the LCD display is as shown in Figure 2-26.

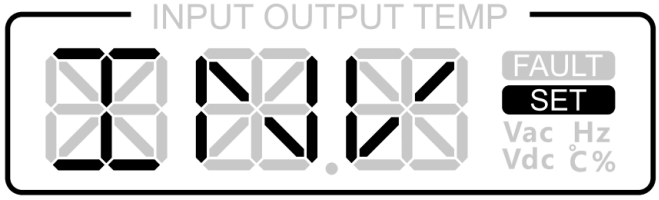

FIGURE 2-26 INV mode

The inverter output voltage (208/220/230/240 V) is set in the same way.

CHAPTER 3

03 Installation

This chapter describes the installation: unpacking and checking, installation preparation and electrical connection.

IN THIS CHAPTER

3.1 Unpacking and Checking
3.2 Installation Preparation
3.3 Electrical Connection

ROADMAP **From delivery to operation**

1. **Read the safety instructions** — Section 1.1
2. **Unpack and check the delivery** — Section 3.1
3. **Choose the place and prepare the cables and breakers** — Section 3.2
4. **Install and connect** — Section 3.3
5. **Start** — Section 4.2
6. **Check the display and the settings** — Section 2.3.2
7. **Look after** — Section 4.4

3.1 Unpacking and Checking

3.1.1 1kVA/ 2kVA/ 3kVA UPS and 6kVA/ 10kVA UPS Long Backup Model

Except for the 6 kVA / 10kVA UPS standard model, the (1K-10K) UPS are packed in a carton.

Unpack the UPS and check the following:

- Inspect the appearance for shipping damage. If any shipping damage is found, report it to the carrier immediately.
- Check against the delivery list that all accessories are present and correct. If there is any discrepancy, contact AEC immediately.

3.1.2 6kVA/ 10kVA UPS Standard Model

The 6 kVA / 10kVA UPS standard model is packed in a carton on a wooden pallet. Unpack it as follows.

PROCEDURE

1. Check the package for shipping damage. If any shipping damage is found, report it to the carrier immediately.
2. Transport the device to the installation site.

CAUTION

When moving the UPS with a forklift, the forks must extend beyond the far side of the wooden pallet, to prevent the UPS from falling.

3. Cut and remove the straps.
4. Remove the packaging and take out the optional components and the user manual. The UPS after unpacking is shown in Figure 3-1.

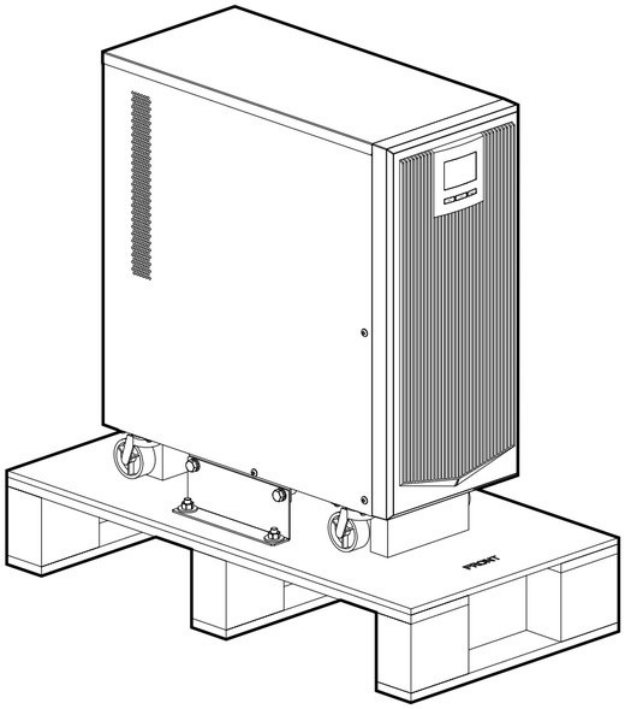

FIGURE 3-1 Appearance after unpacking

5 Check that the delivery is complete.

- Inspect the device for shipping damage. If any shipping damage is found, report it to the carrier immediately.
- Check that all accessories are present and correct. If there is any discrepancy, note it and contact AEC immediately.

6 If the UPS is undamaged, remove the four M8×20 hexagonal bolts (two on each side) between the anchor frame and the anchor support plate, as shown in Figure 3-2.

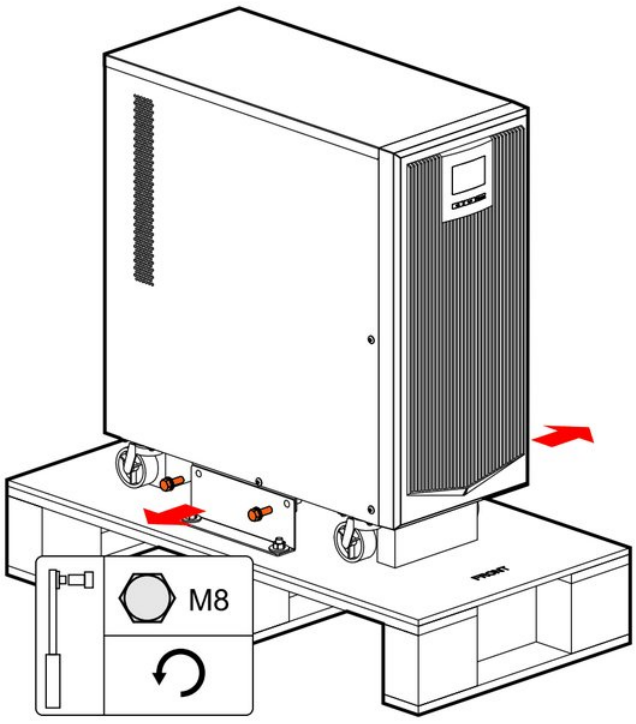

FIGURE 3-2 Dismantle the hexagonal bolts

7 Move the UPS onto the floor and fix it in place.

NOTE

- Once the UPS is on the floor, it can be moved on the four omni-directional castors at its base. Set the castors to ON (unlocked) to move the UPS, and to OFF (locked) once it is in position, so that it cannot move.
- For stability, once the UPS is in its installation position, remove the anchor frame from the wooden pallet and fit it to the anchor support plate with the four M8×20 bolts. If the floor or base has fixing holes, anchor the UPS to the floor or base.

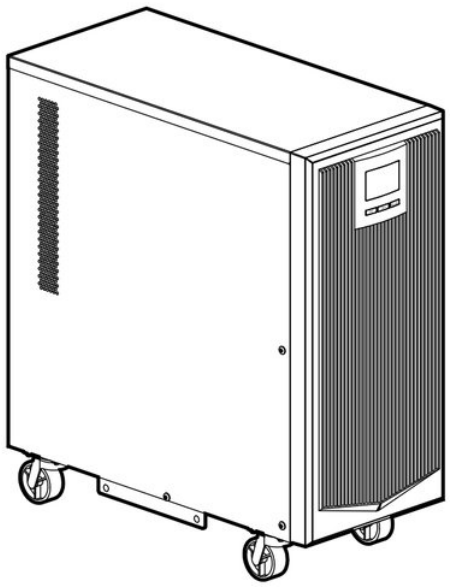

FIGURE 3-3 Install UPS in the installation position

3.2 Installation Preparation

3.2.1 Input Breaker Selection

Install an input circuit breaker (or a power distribution box) sized for the UPS in the UPS input line, to isolate the UPS from the mains. A 2-pole breaker (disconnecting L and N) with backfeed protection is recommended. To allow for battery charging and the inrush current at switch-on, choose a breaker rated 1.5 to 2 times the maximum UPS input current. The input breaker should not include residual-current (earth-leakage) protection, to avoid nuisance tripping. The distribution box should be built by a qualified company. See Table 3-1 for the recommended input breakers.

TABLE 3-1 The recommended input breaker of (1K-10K) UPS

Index Model	AC input (A)		DC input (long backup model) (A)	
	Max. current	Breaker	Max. current	Breaker
1kVA UPS	6	10	37	50
2kVA UPS	12	20	37	50
3kVA UPS	18	32	42	50
6kVA UPS	36	50	39	50
10kVA UPS	60	100	65	100

3.2.2 Selection of the Cross-sectional Area of Wire

For the cross-sectional areas of the AC input, AC output and battery cables of the (1K-10K) UPS, see the recommended values in Table 3-2; never use a smaller size (choose the next larger size if needed).

TABLE 3-2 The recommended cross-sectional area of wire

Model		1kVA UPS	2kVA UPS	3kVA UPS	6kVA UPS	10kVA UPS
AC input (Neutral/live)	Rated current (A)	5.4	10.8	15.6	30.2	48.5
	Cross-sectional area of wire (mm^2)	1.5	2.5	4	6	10
AC output (Neutral/live)	Rated current (A)	4.5	9.1	13.6	27.3	45.5
	Cross-sectional area of wire (mm^2)	1.5	2.5	4	6	10
DC input (Long backup model)	Rated current (A)	29.0	27.8	31.3	30.6	52.0
	Cross-sectional area of wire (mm^2)	6	6	6	6	10
Ground	Cross-sectional area of wire (mm^2)	1.5	2.5	4	6	10

NOTE

- The supplied cables are of good quality and meet safety requirements; they have international and UL approval. If you supply your own cables, use at least the cross-sections in Table 3-2 (valid for lengths up to about 5 m). Longer cables require larger cross-sections.
- The recommended values are calculated for an AC voltage of 220 V. The current-carrying capacity can be adjusted proportionally to the actual AC voltage.

3.3 Electrical Connection

Before making the electrical connections, make sure that all breakers on the UPS rear panel, the upstream mains switch and the upstream battery switches are open (off). Never carry out wiring while the system is energised.

CAUTION

Place wires in such a way that no one can step on or trip over them.

3.3.1 1kVA UPS

The 1kVA UPS uses sockets for input and output. Connect one end of the input power cable to the UPS input socket and the other end to the mains socket, then connect the load power cables to the output sockets. The input and output wiring of the 1kVA UPS is shown in Figure 3-4.

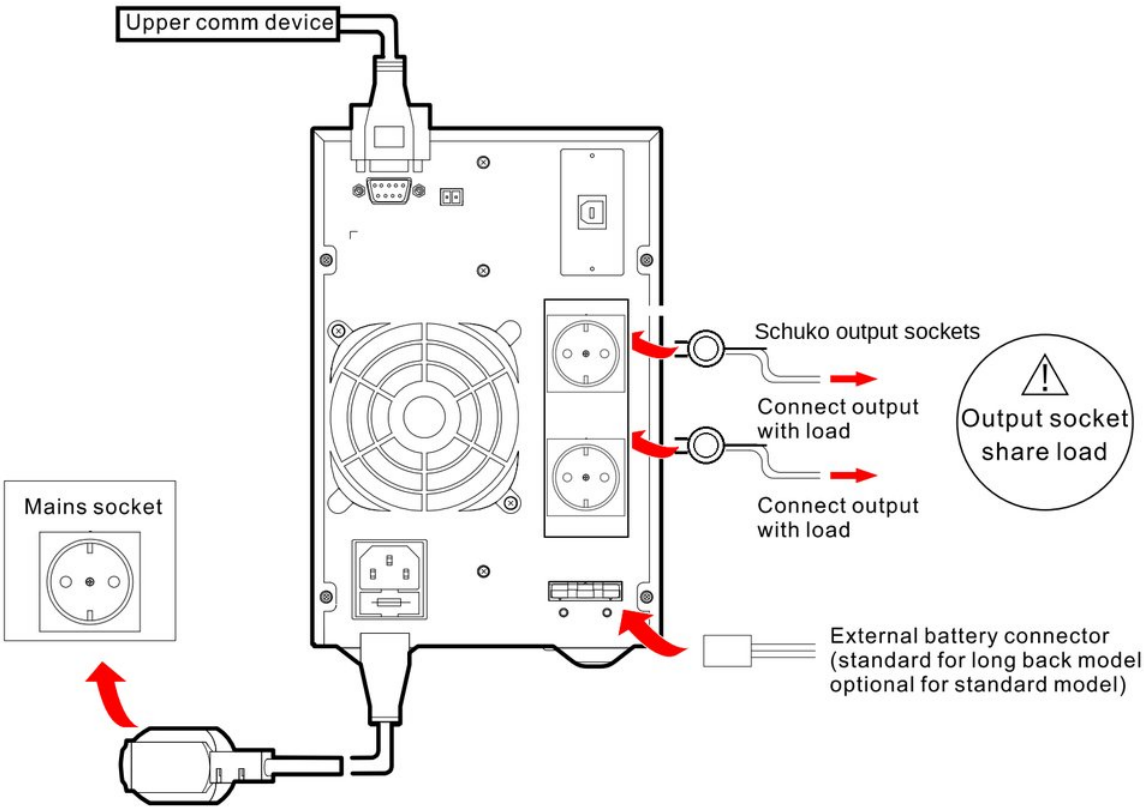

FIGURE 3-4 Wiring diagram of 1kVA UPS standard / long backup model

NOTE

The long backup model must be connected to the battery cabinet: connect the three-core plug of the battery cabinet cable to the three-core socket on the UPS rear panel. For installation and wiring of the battery cabinet, refer to the battery cabinet user manual.

CAUTION

The mains socket should be installed near the UPS and be easily accessible.

Long backup model: connect the UPS to the mains first, then connect the external battery.

The load current of each output socket should not exceed 5 A.

3.3.2 2kVA/ 3kVA UPS

The 2 kVA / 3kVA UPS uses sockets for input and output. Connect one end of the input power cable to the UPS input socket and the other end to the mains socket, then connect the load power cables to the output sockets. The input and output wiring of the 2 kVA / 3kVA UPS is shown in Figure 3-5.

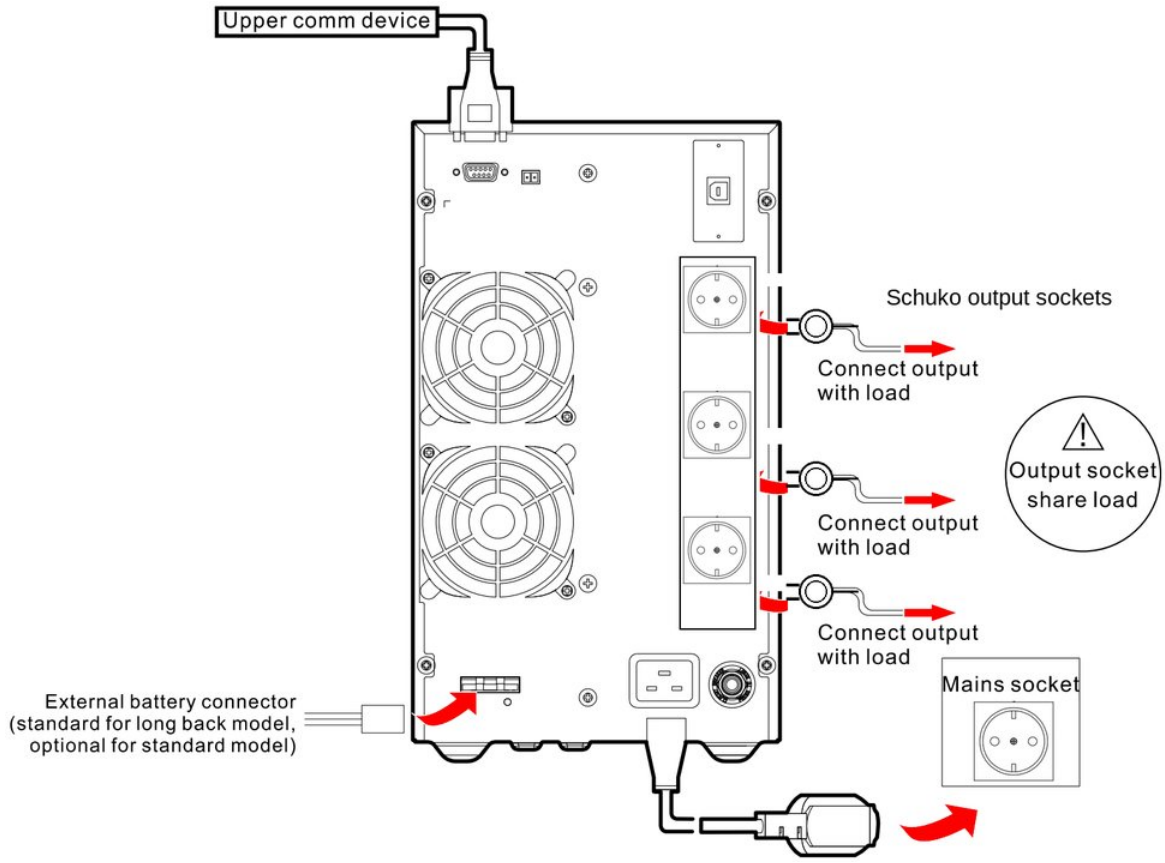

FIGURE 3-5 Wiring diagram of 2kVA/ 3kVA UPS standard / long backup model

> **NOTE**
> The long backup model must be connected to the battery cabinet: connect the three-core plug of the battery cabinet cable to the three-core socket on the UPS rear panel. For installation and wiring of the battery cabinet, refer to the battery cabinet user manual.

> **CAUTION**
> The mains socket should be installed near the UPS and be easily accessible.
>
> Long backup model: connect the UPS to the mains first, then connect the external battery.
>
> The load current of each output socket should not exceed 5 A.

3.3.3 6kVA/ 10kVA UPS

The 6 kVA / 10kVA UPS uses a terminal block for input, output and battery. The wiring of the 6 kVA / 10kVA UPS long backup model is shown in Figure 3-6 and the wiring of the standard model in Figure 3-7.

> **NOTE**
> The wiring terminals of the 6kVA UPS and 10kVA UPS are the same except for their size. Figure 3-6 and Figure 3-7 show the 10kVA UPS as an example.

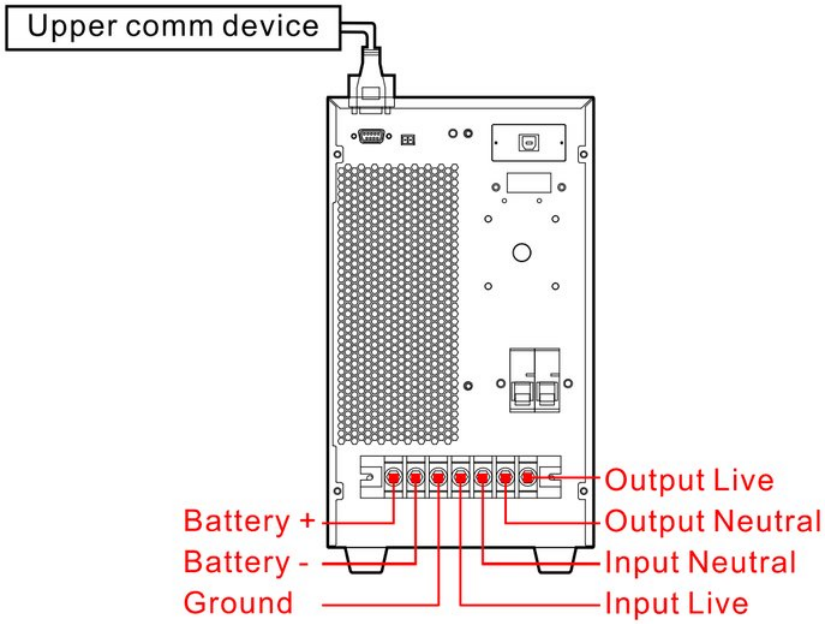

FIGURE 3-6 Wiring diagram of 6kVA/ 10kVA UPS long backup model

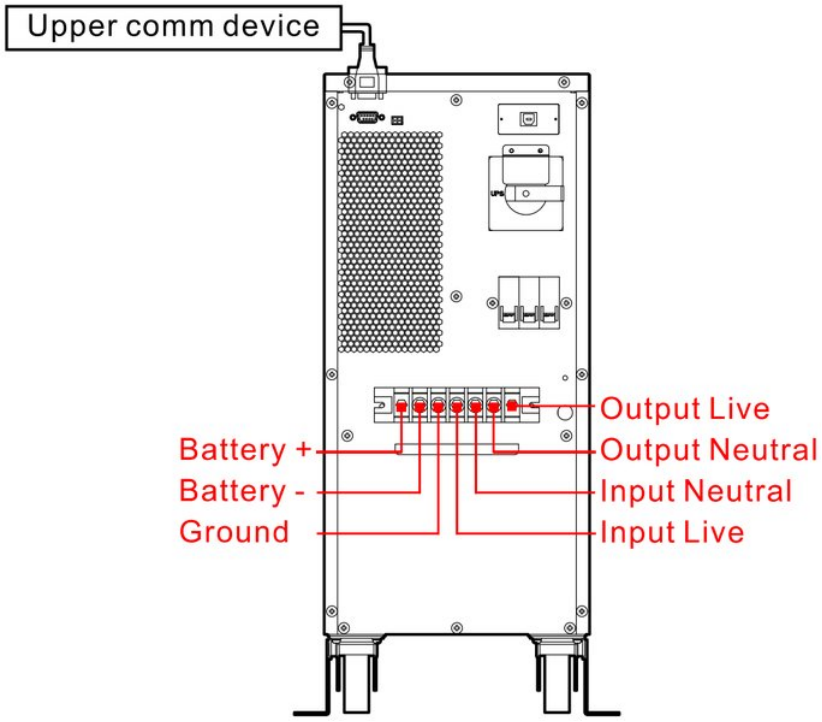

FIGURE 3-7 Wiring diagram of 6kVA/ 10kVA UPS standard model

3.3.4 Intelligent Slot Installation

PROCEDURE

1. Remove the standard intelligent slot.

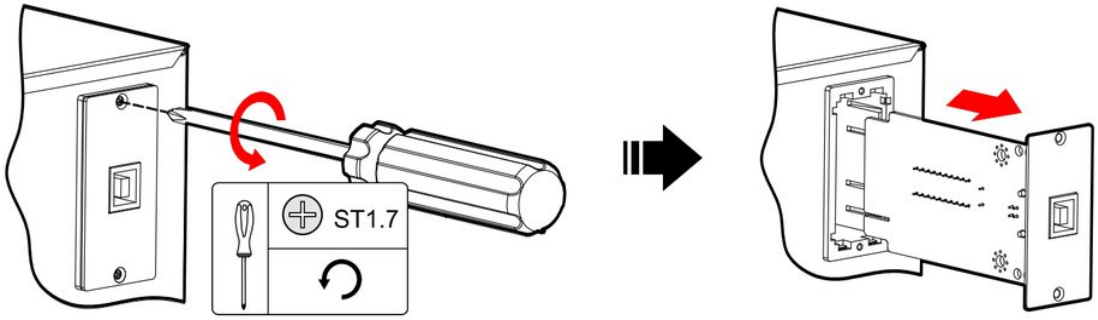

FIGURE 3-8 Dismantle standard intelligent slot

2 Install the optional intelligent slot and fasten it.

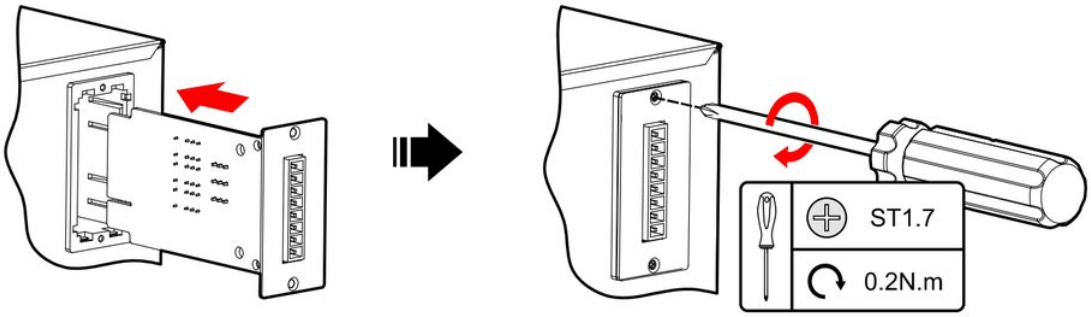

FIGURE 3-9 Install optional intelligent slot

3 Connect the communication cable.

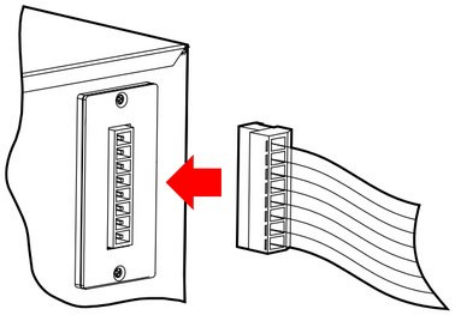

FIGURE 3-10 Connect communication cable

> **NOTE**
> The installation steps are the same for all optional intelligent slots; this section uses the RS485 and dry-contact slot as an example.

CHAPTER 4

04 Operation and Maintenance

This chapter describes operation, routine maintenance and troubleshooting.

IN THIS CHAPTER

4.1 Check Before Startup
4.2 Startup
4.3 Shutdown
4.4 Periodic Preventative Maintenance
4.5 Battery Maintenance
4.6 Maintenance Bypass Mode (Only for UPS with Maintenance Bypass)
4.7 Troubleshooting

4.1 Check Before Startup

- Check that the connections are tight and that the colours of the AC wires comply with the applicable wiring rules.
- Check that the UPS is properly earthed.
- Check that the voltage between neutral and earth is less than 5 Vac.
- If a remote monitoring device is connected, check that the RS232 wiring is correct.
- For long backup models, check that the wiring between the UPS and the battery cabinet is correct and secure.
- Check that the wiring is tidy and the cables are bundled in accordance with the applicable rules.
- Check that the installation leaves room for future changes, expansion and maintenance.
- Check that there is no short circuit on the UPS output and that the load does not exceed the rated capacity of the UPS.

4.2 Startup

PROCEDURE

1. Connect the UPS to the mains socket (1 kVA / 2 kVA / 3kVA UPS) or switch on the mains breaker, bypass breaker and battery breaker (6 kVA / 10kVA UPS).
2. Press and hold **ON** on the panel for 1 s to start the UPS.
3. After about 10 s, when the UPS is running steadily, switch on the loads (e.g. PCs).

⚠ CAUTION

Switch on the largest loads first, then the smaller ones, to avoid an overload trip when a large load starts.

4.3 Shutdown

PROCEDURE

1. Switch off the loads and leave the UPS running without load for about 10 minutes to cool down.
2. Press and hold **OFF** on the panel for 1 s.
3. Unplug the UPS from the mains socket (1 kVA / 2 kVA / 3kVA UPS) or switch off the battery breaker, bypass breaker and mains breaker (6 kVA / 10kVA UPS).

4.4 Periodic Preventative Maintenance

To improve the efficiency and reliability of the UPS, perform the following maintenance regularly.

- Clean the UPS regularly with a dry cloth. Do not use liquid or spray cleaners. Shut down the UPS before cleaning.
- Check that the input and output connections are tight and in good condition.
- Check the cooling fans regularly. Keep the air outlets free of obstructions. Replace damaged fans promptly.
- Check the battery voltage and the working status of the UPS regularly.

4.5 Battery Maintenance

Battery life depends on the ambient temperature and the number of discharges. Prolonged use at high temperature and deep discharges shorten battery life.

- Charge the batteries for 10 hours before first use. The UPS can be used during this time, but if a mains failure occurs before charging is complete, the backup time will be shorter than specified.
- Charge and discharge the batteries once every four to six months: run the UPS on battery until the low-battery shutdown, then recharge. In hot areas, charge and discharge the batteries once every two months. Each charge of the standard battery should last more than ten hours.
- If the UPS is not used for a long time, charge the batteries for more than ten hours every three months.
- Battery life is typically three to five years. Replace faulty batteries promptly. Batteries must be replaced only by authorised professionals.
- The 1K/2K/3K standard models have a battery discharge time-limit protection:
  - When the load is below 75%, there is no discharge time limit.
  - When 75% ≤ load < 90%, the discharge time limit T (in minutes) is T = 18000 / (L - 20) / 60, where L is the load in % (e.g. L = 80 gives T = 5 min).
  - When 90% ≤ load < 100%, the discharge time limit is T = 18000 / L / 60 (T in minutes, L = load in %).

> **NOTE**
> The battery discharge time is determined by both the battery capacity and the time-limit function; the battery capacity takes priority.

4.6 Maintenance Bypass Mode (Only for UPS with Maintenance Bypass)

When the UPS must be serviced or its batteries replaced without interrupting the supply to the load: first switch off the UPS so that it transfers to bypass mode; then remove the maintenance bypass cover and turn the maintenance bypass switch to the maintenance bypass position; finally switch off the mains breaker and the bypass breaker on the UPS rear panel. The load is now supplied directly from the mains through the maintenance bypass switch.

> **CAUTION**
> DANGER: In maintenance bypass mode, hazardous voltage is still present on the input terminals, the output terminals and the filter board terminals.

4.7 Troubleshooting

Table 4-1 lists only some common faults. If in doubt, contact AEC service.

TABLE 4-1 Troubleshooting

Fault phenomenon	Possible reason
The mains is normal and the UPS starts with normal output, but it works in battery mode and the buzzer beeps intermittently.	1. Check the input plugs and sockets for poor contact; 2. Check whether the mains input voltage or frequency shown on the LCD is outside the permitted input range of the UPS; 3. 2 kVA / 3kVA UPS: check whether the over-current protector on the rear panel has tripped. If so, press the over-current protector to reset it.
After installation, switching on blows the fuse or trips the supply.	Output short circuit or wrong output wiring.
When the UPS starts, the LCD and output are normal, but the output stops as soon as a load is connected.	1. The UPS is severely overloaded or the output is short-circuited. Reduce the load to a suitable level or find the cause of the short circuit. A common cause is a short circuit in the output changeover socket, or an input short circuit after a UPS failure. 2. The loads were not switched on in the correct order (largest first). Restart the UPS. When it runs steadily, switch on the largest loads first, then the smaller ones.
Long beep, fault indicator on, UPS in bypass mode, inverter failure.	1. Output overload: the load exceeds the rated power of the UPS. Reduce the load or use a UPS with a higher power rating. It is normal for the UPS to transfer to bypass mode briefly because of the load inrush at start-up and then return to normal automatically. 2. UPS over-temperature protection. Check whether the UPS air inlet or outlet is blocked or the ambient temperature is outside the permitted range.
The UPS normally works correctly, but at a mains failure it does not transfer to battery mode, or it transfers and shuts down on low battery shortly afterwards.	1. Batteries aged or capacity lost: replace the batteries. 2. Battery charger fault: the batteries are not being charged. 3. Battery cable not connected properly or poor contact at the terminals.
The load is a PC and everything works normally, but at a mains failure the UPS keeps running while the computer halts.	Poor earthing: the voltage between neutral and earth is too high.

NOTE

The above information helps the user diagnose common UPS faults. If an internal fault is suspected, contact AEC service.

TABLE 4-2 The meaning of fault symbol and buzzer status

Fault symbol		Buzzer status	Meaning
Fault info. page (page up	EPO	Long beep	Emergency power off (EPO) activated (if the EPO function is fitted): bypass output and inverter
or page down by **SELECT** button)			output are switched off.
	BUS	Long beep	Busbar voltage fault in the UPS: the inverter output is switched off.
	TMP	Long beep	Over-temperature protection: the inverter output is switched off. Check the cooling fans and make sure the air vents are not blocked.
	FAN	Rapid beep (alarm once about every 0.2s)	Fan fault alarm: the inverter output is about to shut down for protection. Check the cooling fans.
		Long beep	Fan fault protection: the inverter output is switched off.
	OUT	Long beep	Output fault: check the output for a short circuit or excessive load.
	BAT	Long beep	Battery fault: battery voltage too low or too high (protection).
	PWR	Long beep	Power failure: have the UPS repaired promptly.
	CHG	Rapid beep (alarm once about every 0.2s)	1. Charger over-temperature protection (check the cooling fan of the charger board). 2. Output short-circuit protection in the charger.
	BYP	Slow beep (alarm once about every 2.0s)	In mains mode, bypass voltage or bypass frequency abnormal. Check that the bypass breaker is switched on.
All load energy bars flash		Rapid beep (alarm once about every 0.2s)	Output overload alarm: the output is about to be switched off; reduce the load.
All battery energy bars flash		Slow beep (alarm once about every 2.0s)	Battery voltage too high. Check the battery and the charger.
All battery energy bars off and the frame flashes		Rapid beep (alarm once about every 0.2s)	Battery nearly exhausted. Save your data and shut down the connected equipment.

CHAPTER 5

05 Package, Transportation, Storage

IN THIS CHAPTER

5.1 Package
5.2 Transportation
5.3 Storage

5.1 Package

The product is packed in a carton. When packing, observe the orientation requirements. One side of the carton carries the handling symbols (keep dry, handle with care, this way up, stacking limit, etc.), the other side the device model; the device name is printed on the front.

5.2 Transportation

Observe the warnings on the carton and avoid severe impacts during transport. To avoid damage, keep the carton in the orientation shown on it. Do not transport the device together with flammable, explosive or corrosive materials. Do not store it in the open air during transshipment. Protect it from rain, snow, liquids and mechanical damage.

5.3 Storage

Store the device in the orientation shown on the carton, 20 cm above the floor and at least 50 cm from walls, heat sources, cold sources, windows and air inlets.

The storage temperature is 0 °C to 40 °C and the relative humidity 20% to 80%. The warehouse must be free of toxic gases and of flammable, explosive or corrosive substances, and the device must not be exposed to strong vibration, impacts or strong magnetic fields. Under these conditions the storage period is six months; after six months the UPS must be checked again before use. During long-term storage, charge the batteries every three months.

CHAPTER 6

06 Safety services and EN 50171

The CPSS3 is a central safety power supply system (CPS) to EN 50171:2021: it supplies essential safety equipment from its battery when the normal supply fails. This chapter gives what the standard requires, what the CPSS provides, and what the designer and the installer of the safety system provide.

IN THIS CHAPTER

6.1 What a CPSS supplies
6.2 Operating mode
6.3 What EN 50171 requires and what the CPSS provides
6.4 Settings for safety services
6.5 Battery, charger and rated operating time
6.6 Installing a safety source
6.7 Commissioning, periodic tests and log-book
6.8 Labels and documents

6.1 What a CPSS supplies

EN 50171 (Clause 1) covers central systems, permanently connected to an AC supply up to 1 000 V, with batteries as the alternative source. They supply:

- emergency escape lighting and safety signs;
- electric circuits of automatic fire-extinguishing installations;
- paging systems and signalling safety installations;
- smoke extraction equipment and carbon monoxide warning systems;
- special safety installations of specific buildings, e.g. high-risk areas.

> **NOTE**
> A CPS is dedicated to essential safety equipment: do not connect general loads such as IT or industrial equipment. Power supplies of fire-alarm systems are covered by EN 54, not by EN 50171.

6.2 Operating mode

EN 50171 (4.1) defines two modes: the changeover mode, with a response time of no more than 0.5 s, and the mode without interruption, where the supply is permanent and there is no response time. The CPSS3 is an online double-conversion system and works in the mode without interruption (4.3): the safety loads are always on the inverter, the battery is kept charged, and when the normal supply fails the battery takes over with no break.

> **WARNING**
> Keep the CPSS3 in online (inverter) mode. Do not enable ECO mode (Section 2.3.2): in ECO mode the safety loads run on the bypass, and the inverter takes over only after a transfer.
>
> In battery operation the bypass is not available: the inverter alone must supply the starting currents of the loads and clear faults on the outgoing circuits (Section 6.6).

6.3 What EN 50171 requires and what the CPSS provides

The table follows the clauses of EN 50171:2021 that concern the CPSS itself. The CPSS is designed to meet these requirements; the installation requirements are in Sections 6.5 to 6.8.

TABLE 6-1 EN 50171:2021 requirements and the CPSS3

Requirement	Clause	CPSS3
Mode without interruption: load permanently supplied, no changeover time	4.1, 4.3	Online double conversion; battery takes over with no break (0 ms). Keep ECO mode off.
Inverter withstands 120 % of the load continuously for the rated operating time	6.6.3	Constant overload up to 120 % of the rated power (Appendix A).
Total harmonic distortion of the output ≤ 5 % on linear load	6.6.4	< 3 % (CPSS3-1K to -3K), < 1 % (CPSS3-6K, -10K), linear load
Output frequency within ± 2 % of the nominal frequency	6.6.5	50 or 60 Hz ± 0.2 % in battery mode.
Charger recharges the discharged battery to at least 80 % of the rated operating time in 12 h	6.3.3	Recharge from low battery in under 12 h, with the battery sized to the charger: maximum charge current 1–4 A (CPSS3-1K to -3K) and 1–8 A (CPSS3-6K, -10K). Check the battery size in Section 6.5.
Charging characteristic set to the battery; temperature compensation where the battery maker requires it	6.3.2, 6.3.5	Charger set at the factory for the battery of the CPSS3; ask AEC for any other battery.
Deep discharge protection at the battery maker's minimum voltage, with indication on the control panel	5.1 e), 6.7	Audible and visual alarm, then the inverter stops at the end-of-discharge point (Section 2.3.1). Charging restarts by itself when the normal supply returns.
Measurement of battery voltage, battery current and load	6.8.1	LCD: input and output voltage, load and battery level (Section 2.2.1).
Indication of the supply source and of the faults (charger, battery circuit, deep discharge)	6.8.2 c) d)	Working status and alarms on the display (Section 2.3.1).
Remote indication by potential-free contacts: ready to operate, supply from battery, system fault	6.8.2 e)	Optional RS485 and dry-contact card (Section 2.2.3); signal assignment: ask AEC (Section 6.4).
Device to disable the charger during the duration test, not accessible without a tool, key or code	6.8.2 b)	Ask AEC; until then, run the duration test with the normal supply of the CPSS opened upstream.
Device with automatic reset to simulate a failure of the normal supply	6.8.2 a)	Provided in the installation: a test push-button that opens the normal supply of the CPSS (Section 6.6).
Enclosure IP 20 at least, resistant to heat and fire (metal enclosures are deemed to comply)	6.2.2, 6.2.3	Metal enclosure (Appendix A).
Batteries with a design life of at least 10 years at 20 °C	6.13	Batteries with 10–12 years expected life (AEC data). Batteries supplied by others must have the same design life.
Battery enclosures and rooms to EN IEC 62485-2	6.1, 6.2.8, 7.4	AEC battery cabinets; ventilation of the room or cabinet: Section 6.6.

6.4 Settings for safety services

Make these settings at commissioning, after the start-up of chapter 4, and write them in the log-book (Section 6.7).

PROCEDURE

1. **Online mode.** Set the work mode to INV, not ECO (Section 2.3.2).

2. **Remote indications.** Fit the optional RS485 and dry-contact card (Section 2.2.3) and wire its outputs to the safety panel. Ask AEC which output carries each signal, and set each output NC or NO with its jumper so that the fault indication opens on fault.
3. **Battery breaker.** Keep it closed: the CPSS must be ready at all times. Open it only for maintenance. The advice of the platform chapters to open the battery breaker when the UPS is not in use does not apply to a CPSS.

6.5 Battery, charger and rated operating time

The rated operating time (autonomy) is set by the fire-safety design of the building and the national rules, not by the CPSS. EN 1838 asks at least 1 h for escape-route lighting; 3 h is common where the building stays occupied after a failure of the normal supply. EN 50171 (5.2) lists what the user gives the manufacturer to size the system:

- type and value of the supply voltage and of the output voltage;
- load profile over the rated operating time, and the division into maintained and non-maintained loads;
- permissible changeover time and the rated operating time required;
- type and intended position of the battery, system configuration, ambient temperature and humidity.

AEC sizes the battery of each CPSS on these data. The charger must then recharge it to 80 % of the rated operating time in 12 h (EN 50171, 6.3.3). As a reference value, the standard gives 10 A of charge current for a 100 Ah battery (6.3.3, note 1). Table 6-2 gives the battery capacity that matches the charger of each model at that reference; for a larger battery ask AEC to verify the recharge.

TABLE 6-2 Charger and battery capacity at the EN 50171 reference value (10 A per 100 Ah)

Model	Maximum charge current	Battery capacity at the reference
CPSS3-1K · 2K · 3K	4 A	40 Ah
CPSS3-6K · CPSS3-10K	8 A	80 Ah

> **NOTE**
> Battery life and capacity depend strongly on temperature (EN 50171, 5.1, note 1): the 10-year design life is given at 20 °C. Keep the batteries at about 20 °C.

6.6 Installing a safety source

The installation of the safety system is the responsibility of its designer and installer. In addition to chapter 3, HD 60364-5-56:2018 (in Italy CEI 64-8, Part 5-56) and the national fire-safety rules apply:

LOCATION

- Install the CPSS and its batteries as fixed equipment, in a suitable location: a constructional enclosure or a separate fire-protected compartment or room that keeps them working in a fire (560.3.18, 560.6.2, 560.6.3). The fire resistance is set by the fire-safety design.
- The location is accessible only to skilled or instructed persons, segregated from other sources, and protected from fire, flooding, freezing and vandalism (560.6.3).

VENTILATION

- Ventilate the location so that fumes from the safety source cannot reach occupied areas (560.6.4), and remove the heat of the CPSS given in chapter 3.
- Ventilate the battery room or cabinet to EN IEC 62485-2 (EN 50171, 6.1 and 7.4). For lead-acid batteries the airflow is $Q = 0.05 \times n \times I_{gas} \times C_{rt} \times 10^{-3}$ m³/h, with n the number of cells, C_{rt} the rated capacity in Ah and I_{gas} in mA per Ah (for VRLA batteries 1 on float charge and 8 on boost charge). Use the battery maker's values.

CABLES AND PROTECTIVE DEVICES

- Circuits of safety services that must work in a fire: fire-resistant cables to the IEC 60331 series and IEC 60332-1-2, mineral-insulated cables, or a wiring system with the same fire protection (560.8.1), for the duration required by the design. Do not run them through locations with fire risk unless they are fire-resistant (560.7.2), and keep them separate from other circuits.
- Do not protect circuits of safety services with RCDs or AFDDs (560.7.13).
- The inverter must trip the protective device of a faulty outgoing circuit without shutting down (EN 50171, 6.6.8). Choose the protective devices of the final circuits with AEC, for operation from the battery without the bypass, and make them selective, so that a fault on one circuit leaves the others supplied (560.7.4).
- Provide in the supply switchboard a test push-button with automatic reset that opens the normal supply of the CPSS, to simulate a failure of the normal supply (EN 50171, 6.8.2 a).
- Identify the switchgear of the safety services clearly and group it in locations accessible only to skilled or instructed persons (560.7.5).

6.7 Commissioning, periodic tests and log-book

Before commissioning, the installation is verified (EN 50171, Clause 8; HD 60364-6). For emergency escape lighting, EN 50172:2024 sets the periodic tests and asks that each result is recorded in the log-book kept for the system; in Italy UNI 11222 gives the verification and maintenance procedures. The CPSS3 keeps its own records, which help, but do not replace the log-book.

TABLE 6-3 Periodic tests

When	What	Reference
Every day	The display and the remote indications show normal operation, without alarms.	EN 50172, 7.4
Every month	Simulate a failure of the normal supply (test push-button) long enough to check every luminaire and sign; check the monitoring of the CPSS; record date and result.	EN 50172, 7.4.3
Every year	Full rated-duration test with the charger disabled; at the end, restore the normal supply and check the indicators; record the battery voltage at the end, date and result.	EN 50172, 7.4.4
As the platform requires	Preventive maintenance and battery maintenance of the CPSS (Section 4.4, Section 4.5).	this manual

⚠ CAUTION

After the annual test the battery is discharged and needs up to 12 h to recover 80 % of its autonomy. Plan the test when the building can do without the full autonomy, as the fire-safety design allows.

TABLE 6-4 Log-book (copy this page)

Date	Test	Duration (min)	Battery voltage at the end (V)	Alarms, faults, actions	Name and signature

6.8 Labels and documents

- Keep the rating label and the warning labels of the CPSS clean and readable (EN 50171, 6.14 and 6.15). Do not cover them with other labels.
- Label the CPSS, its supply switchboard and its outgoing circuits as part of the safety services, as the design of the safety system requires (560.7.5).
- Keep with the CPSS: this manual, the battery data, the settings made at commissioning, the wiring diagram of the safety circuits and the log-book (EN 50171, Clause 7).

APPENDIX A

A Technical Specifications

Item	CPSS3-1K	CPSS3-2K	CPSS3-3K	CPSS3-6K	CPSS3-10K
Rated power (kVA)	1	2	3	6	10
Rated active power (W), PF 0.8	800	1600	2400	4800	8000
Overload	constant up to 120 % (AEC data)				
Input voltage	120–295 V			80–275 V	
Input frequency	50 / 60 Hz ± 10 % (self-adapting)				
Input	single phase, L, N, PE · power factor ≥ 0.99				
Battery voltage	36 V	72 V	96 V	192–240 V	
Charge current	1–4 A			1–8 A	
Battery life · recharge	10–12 years expected life · < 12 h				
Output voltage	208 / 220 / 230 / 240 V (settable)				
Output frequency (battery mode)	50 / 60 Hz ± 0.2 %				
Output voltage distortion	< 3 % linear			< 1 % linear; < 4 % non-linear	
Transfer time	0 ms (mode without interruption); ECO mode not to be used				
Communication	RS232, EPO; optional SNMP card, RS485 and dry-contact card				
Noise · temperature · humidity	< 50 dB	< 55 dB			
	−5 … 40 °C · 0–95 % non-condensing				
W × D × H	145 × 357 × 226 mm	190 × 397 × 330 mm		190 × 429 × 337 mm	
Standards	CE · EN 50171 · safety EN 62040-1 · EMC EN 62040-2 · classification EN 62040-3				

Platform data from the AEC IST3 1–10 kVA user manual rev. 01; CPSS ratings, overload, battery life and recharge from the AEC UPS Catalogue EMEA 2026. Specifications are subject to change without prior notice.

Dimensions and weights

Overall dimensions in millimetres (W × D × H) and net weights, from the technical data of this manual. Leave the clearances given in the installation chapter around the UPS.

CPSS3-1K
tower, IST3 1 kVA frame



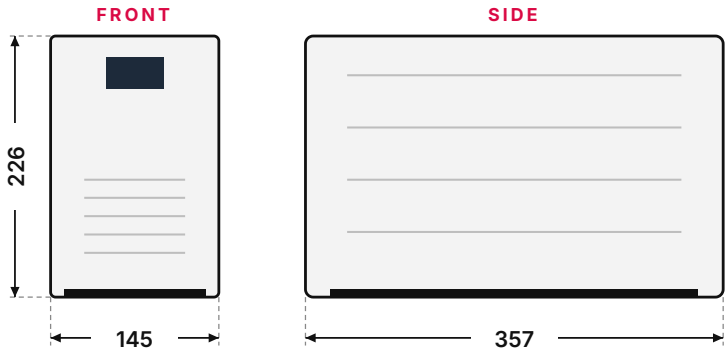

W × D × H	145 × 357 × 226 mm
CPSS3-1K	4.6 kg

CPSS3-2K · CPSS3-3K
tower, IST3 2–3 kVA frame





W × D × H	190 × 397 × 330 mm
CPSS3-2K	9.0 kg
CPSS3-3K	9.2 kg

CPSS3-6K · CPSS3-10K

tower, IST3 6–10 kVA long-backup frame





W × D × H	190 × 429 × 337 mm
CPSS3-6K	11.0 kg
CPSS3-10K	12.5 kg

APPENDIX B

B Acronyms and Abbreviations

Acronym	Meaning
AC	Alternating Current
DC	Direct Current
ECO	Energy Control Operation
EPO	Emergency Power Off
IEC	International Electrotechnical Commission
IGBT	Insulated-Gate Bipolar Transistor
LCD	Liquid Crystal Display
NC	Normally Closed (contact)
PE	Protective Earth
PFC	Power Factor Correction
PWM	Pulse-Width Modulation
RMS	Root Mean Square
RS232	Recommended Standard 232
RS485	Recommended Standard 485 (serial bus)
SNMP	Simple Network Management Protocol
THD	Total Harmonic Distortion
UPS	Uninterruptible Power Supply

More on the AEC partner portal

PARTNER PORTAL

portal.emea.aecups.com

- 3D models of every UPS
- Diagrams and drawings
- Video tutorials
- Manuals and catalogues, always up to date

WHATSAPP SUPPORT

+39 393 080 5211

Technical support 24/7. Scan the code to write to AEC service.

AEC International Srl
Via Nerviano 55 · 20045 Lainate (MI) · Italy

Sales +39 02 9415 8991 · info@aecups.com
Service +39 393 080 5211 · service@aecups.com