AEC
Technology Behind Power

USER MANUAL

# CPSS7

## 10–40 kVA

Central safety power supply system to EN 50171




**English**

Read this manual before installing and using the CPSS.
Keep it with the CPSS for the periodic tests.

AEC-UM-CPSS7-10-40-EN
Rev. 01 · 11/2026

OVERVIEW

# Contents


**About this manual** 3

**1 Safety Description** 4
1.1 Safety Notices 4
1.2 Operation and Maintenance Requirements 6
1.3 Environment Requirements 6

**2 Overview** 7
2.1 Product Intro 7
2.2 Work Principle 18

**3 Installation** 23
3.1 Announcements 23
3.2 Installation Preparation 23
3.3 Transport and Unpacking 27
3.4 Mechanical Installation 29
3.5 Electrical Connection 32

**4 Touch Screen Operation** 47
4.1 Menu Hierarchy 47
4.2 Main Page 49
4.3 Login Page 55
4.4 Information Management Page 55
4.5 Setting Management Page 60
4.6 Current Fault Page 73
4.7 Buzzer Control 74
4.8 ON/OFF Operation 75

**5 Use and Operation** 76
5.1 Check Before Startup 76
5.2 Startup Operation 76
5.3 Shutdown Operation 76
5.4 Parallel System Operation 77
5.5 Periodic Preventative Maintenance 78
5.6 Battery Maintenance 78
5.7 Troubleshooting 79

**6 Package, Transportation and Storage** 82
6.1 Package 82
6.2 Transportation 82
6.3 Storage 82

**7 Safety services and EN 50171** 83
7.1 What a CPSS supplies 83
7.2 Operating mode 83
7.3 What EN 50171 requires and what the CPSS provides 84
7.4 Settings for safety services 84
7.5 Battery, charger and rated operating time 85
7.6 Installing a safety source 85
7.7 Commissioning, periodic tests and log-book 86
7.8 Labels and documents 87

**A Technical Specifications** 88
Dimensions and weights 89

**B Acronyms and Abbreviations** 90

BEFORE YOU START

# About this manual

This manual describes the AEC CPSS7 10–40 kVA, a central safety power supply system (CPS) to EN 50171, built on the AEC IST7 10–40 kVA platform. Chapters 1 to 6 cover installation, operation and maintenance, chapter 7 the EN 50171 requirements, Appendix A the CPSS7 data. Keep it with the CPSS for the periodic tests.



10 – 20 kVA



30 – 40 kVA

| | |
|---|---|
| **8–32 kW** rated output, power factor 0.8 | **120 %** constant overload of the inverter |
| **< 12 h** recharge from low battery | **0 ms** no break: mode without interruption |

MODELS COVERED

- CPSS7-10 and CPSS7-20: 10 and 20 kVA, 8 and 16 kW, tower (IST7 10–20 kVA frame)
- CPSS7-30 and CPSS7-40: 30 and 40 kVA, 24 and 32 kW, tower (IST7 30–40 kVA frame)
- With internal or external batteries; battery cabinets BB4 … BB8

WHO THIS MANUAL IS FOR

Installers, electricians, IT and facility staff who install, operate, test and maintain the CPSS. Electrical installation and any work inside the CPSS must be done by qualified personnel, in line with IEC 60364 and the local wiring rules.

> **NOTE**
> In chapters 1 to 6 the CPSS7 is called “the UPS”, as on its display, and its frames take the platform names (10K … 40K UPS). The 15 kVA rating and the T versions are not CPSS7. Output power factor 0.8: kW = 0.8 × kVA; the CPSS7 ratings are in Appendix A.

## Safety messages

Safety messages in this manual follow ISO 3864 / ANSI Z535. The signal word tells how serious the hazard is.

| | |
|---|---|
| DANGER | A hazardous situation which, if not avoided, **will** result in death or serious injury. |
| WARNING | A hazardous situation which, if not avoided, **could** result in death or serious injury. |
| CAUTION | A hazardous situation which, if not avoided, could result in minor or moderate injury, or in damage to the equipment. |
| NOTE | Additional information that stresses or completes the text. |
| TIP | A hint that helps you solve a problem or save time. |

Numbers in red circles on a picture are explained in the table or list that follows it. References in red, such as Figure 2-1 or Table 3-1, are links in the PDF. Figures are for reference only: the actual product may differ in detail.

## Up and running

The short version: each step points to the full instructions. Read the safety chapter first.

1. **Read the safety instructions.** See Section 1.1, Safety Notices.
2. **Choose the place: a fire-protected room for safety services.** See Section 7.6, Installing a safety source.
3. **Unpack and check the delivery.** See Section 3.3, Transport and Unpacking.
4. **Install and connect the CPSS.** See Section 3.5, Electrical Connection.
5. **Start the CPSS.** See Section 5.2, Startup Operation.
6. **Make the settings for safety services.** See Section 7.4, Settings for safety services.
7. **Test and record: monthly and annual tests.** See Section 7.7, Commissioning, periodic tests and log-book.

01

CHAPTER 1

# Safety Description

This chapter describes the safety notices. Before performing any work on the UPS, read this user manual carefully to avoid personal injury and damage to the device caused by improper operation.

IN THIS CHAPTER

1.1 Safety Notices
1.2 Operation and Maintenance Requirements
1.3 Environment Requirements

AT A GLANCE **The safety rules of this chapter**



High voltage inside, also after the UPS is switched off: wait before opening it.



Installation, opening and service by qualified personnel only.



Batteries: never short-circuit them, keep them from fire, use only the specified type.



Electrostatic-sensitive boards: wear an earthed wrist strap.



Earth the UPS before connecting anything else.



No liquids or foreign objects inside the UPS.



In case of fire use a dry-powder extinguisher, never water or liquid.



Keep the air inlets and outlets free; respect the clearances.

## 1.1 Safety Notices

This section describes the safety notices that must be observed during installation, use, maintenance and all related operations.

**CAUTION**

Before operating the UPS, read the safety notices and operating instructions in this section carefully to avoid accidents.

The DANGER, WARNING and CAUTION notices in this manual do not cover all the safety rules that must be observed; they only supplement the general safety rules for operation.

**NOTE**

AEC accepts no liability for consequences of violating general safety requirements or the safety standards for design, manufacture and use.

### 1.1.1 Safety Instructions

**⚠ CAUTION**

High temperatures and high voltages are present inside the UPS. During use, strictly comply with all warnings and operating instructions on the UPS and in this user manual.

**⚠ CAUTION**

This UPS is an EMC category C3 product (IEC 62040-2), intended for commercial and industrial use. In a residential environment it may cause radio interference; in that case the user may have to take additional measures.

- No liquid or other objects are allowed to enter the UPS.
- The UPS must be properly earthed.
- In case of fire, use a dry-powder extinguisher. Do not use water or other liquid extinguishers: risk of electric shock.

### 1.1.2 Battery Safety Notices

**⚠ CAUTION**

The following instructions are for models with built-in batteries only.

Use only batteries of the type specified by AEC; other batteries can damage the UPS.

- Batteries may be replaced only by authorised service personnel. Do not wear conductive objects such as watches, bracelets or rings while working. Wear rubber shoes and gloves and use tools with insulated handles.
- Do not place tools or other conductive objects on the batteries.
- Never short-circuit the battery terminals or connect them with reversed polarity: risk of fire and electric shock.
- Before connecting or disconnecting battery terminals, open the battery breaker so that the charger is disconnected.
- All batteries must be of the same type, model and brand.
- Keep the batteries away from open flames and from electrical equipment that may produce sparks, to avoid personal injury.
- Do not open or damage the batteries: the electrolyte contains strong acid, harmful to skin and eyes. In case of contact, rinse immediately with plenty of water and seek medical attention.
- Dispose of used batteries in accordance with local regulations.

### 1.1.3 Anti-Static Protection

**⚠ CAUTION**

Static electricity from the human body can damage electrostatic-sensitive components on the PCBs. Before touching such components, wear an anti-static wrist strap and connect its other end securely to earth.

## 1.2 Operation and Maintenance Requirements

**⚠ CAUTION**

Only authorised service personnel may open the UPS. Opening it otherwise can cause electric shock and voids the warranty for any resulting fault.

- Before the UPS is moved, rewired or serviced, disconnect all electrical connections (AC power, battery, etc.) to isolate all power inputs. After disconnecting all power sources, wait at least 10 minutes before working on the UPS. Until then, the output and internal parts may still be live and can cause electric shock.
- When removing a fan, do not put fingers or tools into the rotating fan, to avoid damage to the device or personal injury.

## 1.3 Environment Requirements

**⚠ DANGER**

Do not install the UPS where flammable or explosive gases or smoke are present, and do not operate it in such an environment.

- Do not use the UPS in direct sunlight, in the rain or in damp places.
- The operating temperature of the UPS is -5 °C to 40 °C, relative humidity 0 % to 95 %, non-condensing (recommended operating temperature 20 °C to 25 °C, humidity about 50 %).
- Place the UPS on a flat, vibration-free floor with a gradient of less than 5°. Keep the area around the UPS well ventilated. The clearance between the rear or sides of the UPS and adjacent equipment or walls must be at least 300 mm (300 mm to 500 mm recommended). Poor ventilation raises the temperature inside the UPS, which shortens the service life of its components and of the UPS itself.
- The UPS is rated for operation up to 2000 m above sea level. Above 2000 m, derate the output power according to IEC 62040-3:2011.

CHAPTER 2

# 02 Overview

This chapter describes the UPS model designations, features, structure, operating principle, etc.

IN THIS CHAPTER

2.1 Product Intro
2.2 Work Principle

THE UPS AT A GLANCE



10 – 20 kVA: touch screen



Rear: breakers, terminals, communication



30 – 40 kVA

## 2.1 Product Intro

The 10K-40K series UPS is a high-frequency, online double-conversion UPS with digital control. It provides reliable power protection for file servers, enterprise servers, central servers, microcomputers, concentrators, telecom systems, data centres and other equipment that needs high-quality power, and is widely used in key sectors such as postal services, finance, networks, stock exchanges and railways.

> **NOTE**
>
> 1. The 10K/15K/20K UPS can be set to three-phase input/three-phase output, three-phase input/single-phase output or single-phase input/single-phase output mode. The 30K/40K UPS can be set to three-phase input/three-phase output or three-phase input/single-phase output mode. 2. Three-phase input three-phase output (three in three out) is 33 mode UPS, three-phase input single-phase output (three in one out) is 31 mode UPS, single-phase input single-phase output (one in one out) is 11 mode UPS. 3. The UPS mode is changed through the wiring, the connector jumpers supplied as accessories, the screen setting and the mode connector (30K-40K only); for details see 3.5.1 UPS Wiring Operation.

### 2.1.1 Features

#### COMPLETELY DIGITALIZED SMART CONTROL

The UPS supports several input/output modes: 33, 31 and 11 (11 mode on 10K-20K only). It detects the grid frequency (50 Hz/60 Hz) and adapts to it automatically. The output voltage can be set to 220 V, 230 V or 240 V (default 230 V) for greater flexibility.

#### ENERGY CONSERVATION AND HIGH EFFICIENCY

Three-level inverter and PFC control technology give a clean output voltage waveform, an overall efficiency of up to 96 % and an input power factor of 0.99 or higher, which makes better use of electrical energy and reduces the load on the grid.

#### SMART FAN SPEED CONTROL

The fan speed is adjusted automatically to the load, which prolongs fan life and reduces noise.

#### ECO ENERGY CONSERVATION MODE DESIGN

The UPS has an ECO energy-saving mode. In this mode, when the grid is good, the load is supplied preferentially from the bypass and the efficiency reaches 99 %. When the bypass voltage or frequency goes out of the normal range and no longer meets the load requirements, the UPS switches to inverter output. This saves energy while keeping the power supply reliable.

#### LOW MAINS INPUT VOLTAGE

Independent fast-detection technology: at low load the battery does not discharge as long as the mains voltage stays above 80 V (the mains low limit). In mains mode all output power is taken from the grid, so the battery stays fully charged, the number of discharges is reduced and battery life is prolonged.

### 2.1.2 Appearance

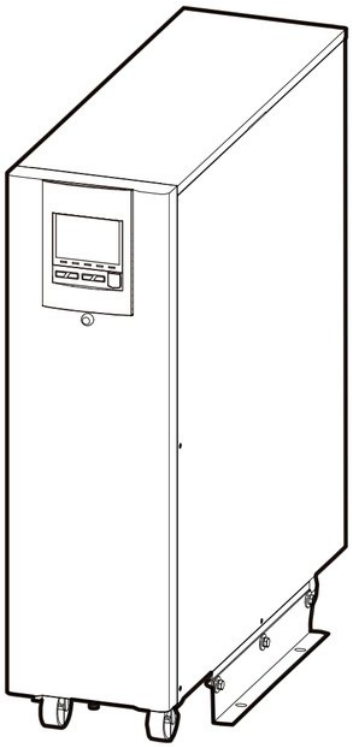

**FIGURE 2-1** Appearance of 10K/15K/20K UPS

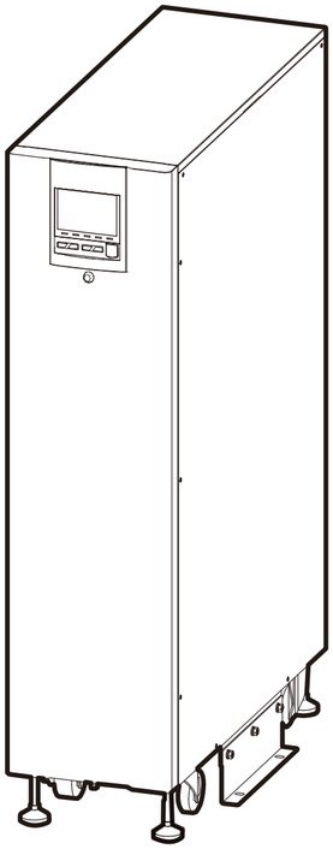

**FIGURE 2-2** Appearance of 30K/40K UPS

## TOUCH SCREEN OPERATION PANEL

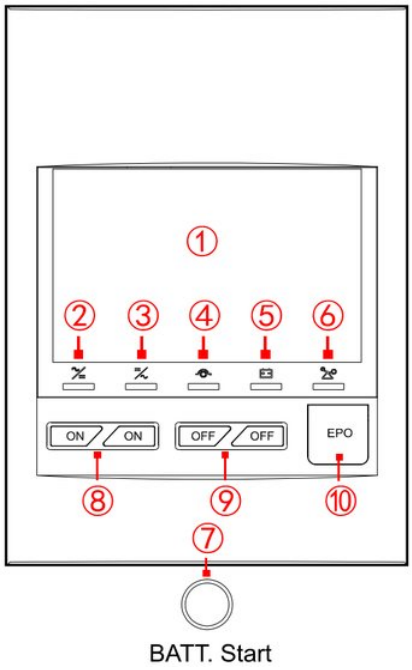


**FIGURE 2-3** Touch screen operation panel

**TABLE 2-1** Illustration for touch screen operation panel

| No. | Name | Illustration |
|---|---|---|
| **Illustration for operation panel** | | |
| | Touch screen display | Shows the working status and system setting. |
| | AC/DC indicator | On (green): rectifier works normally; On (red): rectifier abnormal. |
| | DC/AC indicator | On (green): inverter works normally; On (red): inverter abnormal. |
| | BYP. indicator | On (green): bypass output; On (red): bypass abnormal. |
| | BATT. LOW indicator | On (red): battery voltage low. |
| | OVERLOAD indicator | On (red): output overload or overload protection. |
| **Buttons operation instructions** | | |
| | **BATT. Start** button | Press the **BATT. Start** button for 7 s to power up the auxiliary supply. |
| | Pair of **ON** buttons | Press both **ON** buttons together until a beep is heard: the system powers on. |
| | Pair of **OFF** buttons | Press both **OFF** buttons together for 3 s: the system powers off. |
| | EPO emergency power off button | Press the button to switch off the UPS output immediately. |

### BATTERY START

The battery start operation: first press and hold the **BATT. Start** button for 7 seconds, then press both **ON** buttons together until a beep is heard to start the UPS.

> **NOTE**
> Battery start is used only to start the UPS from the battery when no mains power is available.

## REAR PANEL

- 10K/15K/20K UPS

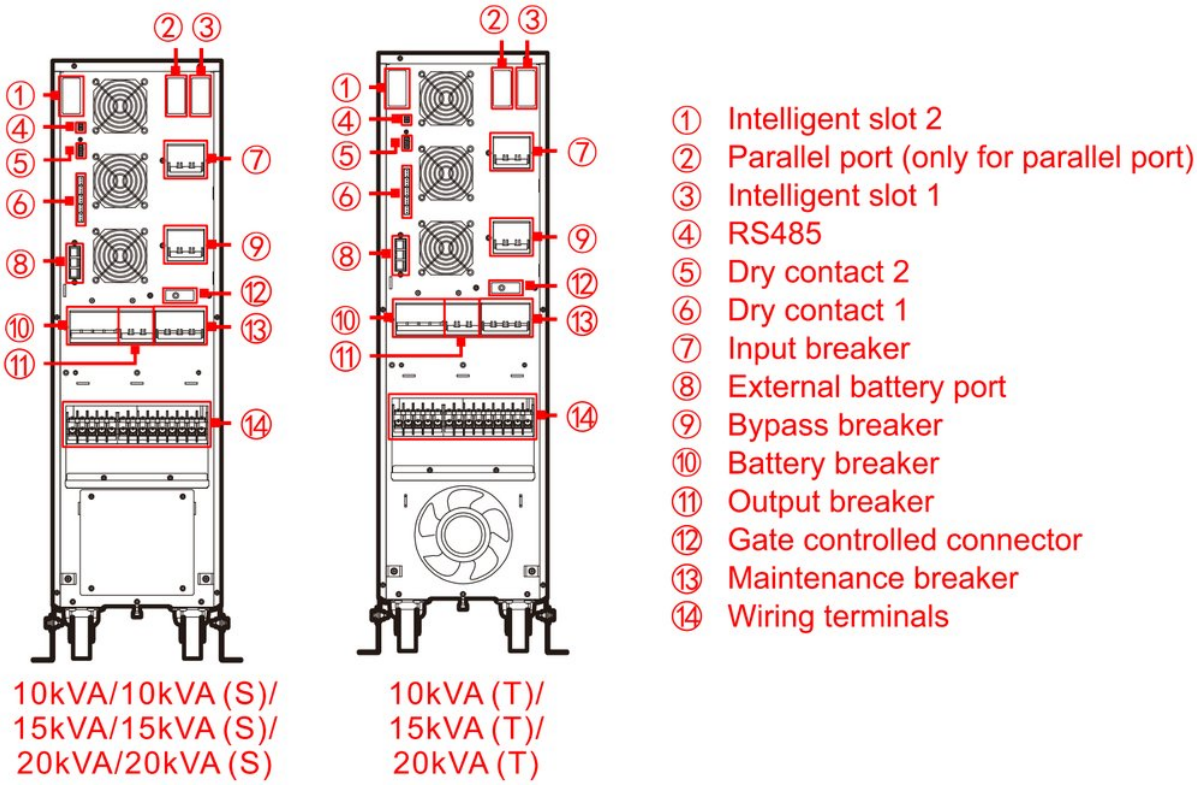


**FIGURE 2-4** Structure of 10K/15K/20K UPS rear panel

- 30K UPS

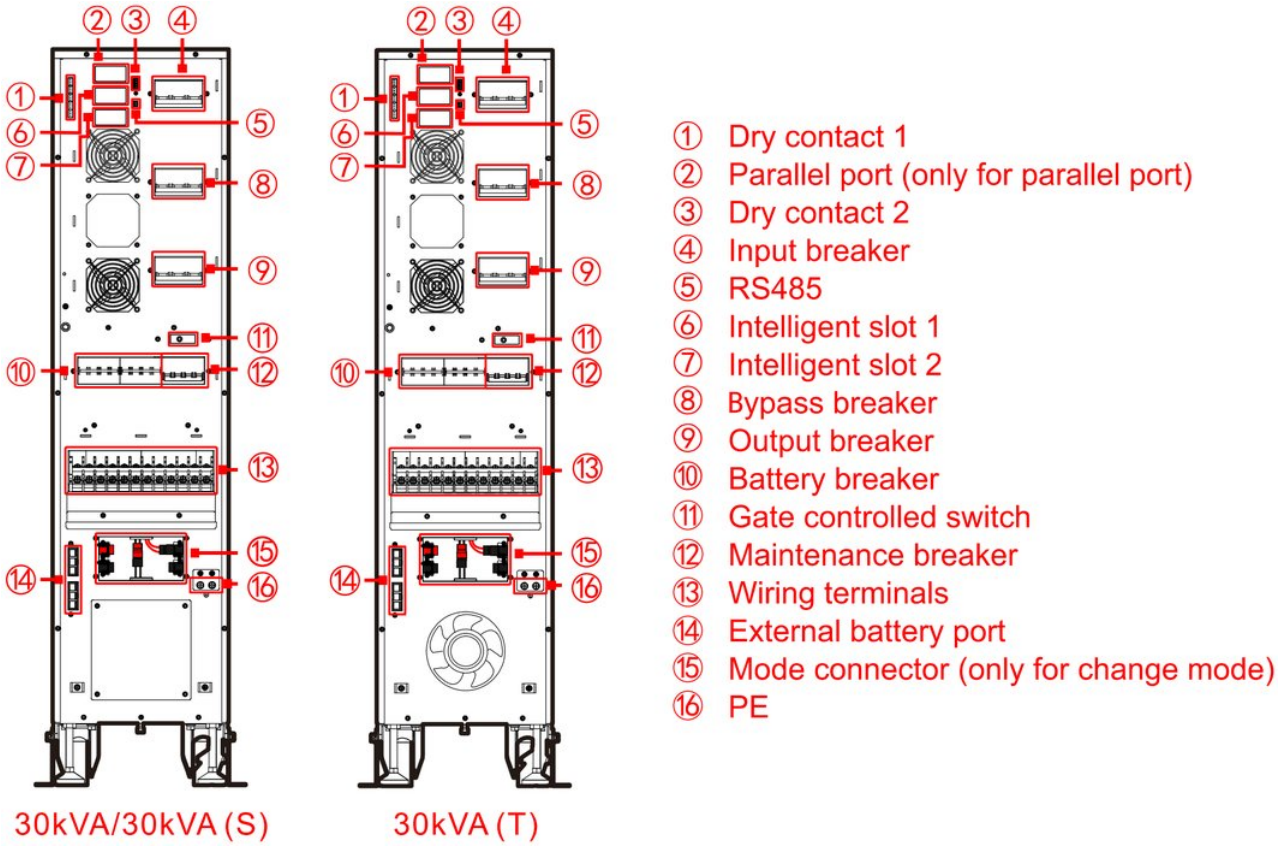


**FIGURE 2-5** Structure of 30K UPS rear panel

- 40K UPS

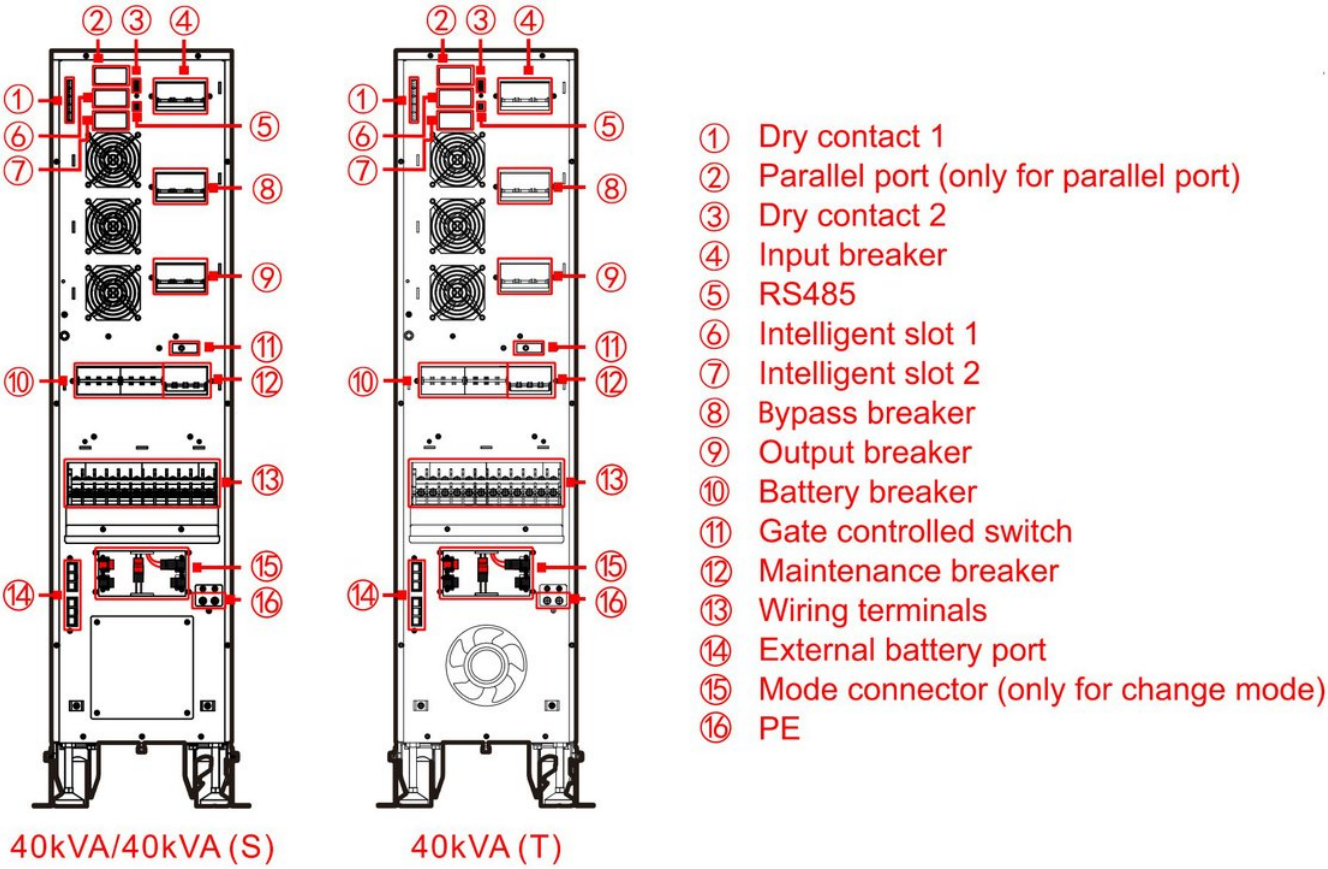


**FIGURE 2-6** Structure of 40K UPS rear panel

**NOTE**

The wiring terminals differ slightly between 33, 31 and 11 mode. For the terminals of each mode, see 3.5.1 UPS Wiring Operation.

**CAUTION**

1.
2. The cover interlock switch opens automatically when the maintenance breaker cover plate is removed and closes again when the cover plate is refitted.
3. Switching to maintenance bypass: first remove the maintenance breaker cover plate; the interlock switch for maintenance-bypass detection opens automatically and the UPS switches off the inverter and transfers to bypass. Then switch on the maintenance bypass breaker and switch off the input, bypass and output breakers. The load is now supplied through the maintenance bypass and the UPS is isolated from its input and output, so its cables can be disconnected for maintenance. The maintenance bypass circuit remains live.
4. Returning from maintenance bypass to inverter mode: switch on the input, bypass and output breakers in turn. When the UPS internal supply is normal and the touch screen shows the bypass output voltage, switch off the maintenance bypass breaker. Refit the maintenance bypass breaker cover plate. Finally, press both ON buttons on the UPS panel to start the inverter.

### 2.1.3 Communication

The 10K-40K series UPS supports the following communication methods: RS485, Parallel Kit-T(2m) NT-PA, communication dry contact, Dry-contact Kit(Y5) NT-RS485Y5, Protocol Transfer Kit NT-MODBUS and SNMP card.

**TABLE 2-2** Communication method correspondence with hardware port

| Communication method | Communication port |
|---|---|
| RS485 | RS485 |
| Dry contact | Dry contact 1: output dry contact; Dry contact 2: input dry contact (EPO+IN. 1) |

**TABLE 2-3** Communication method correspondence with hardware port (optional)

| Communication method | Sketch map | Communication port |
|---|---|---|
| Parallel Kit-T (2m) NT-PA (optional) | 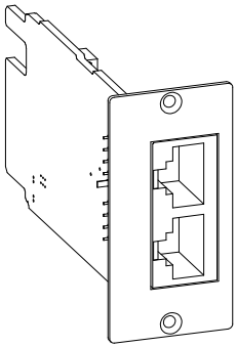 | Parallel port |
| Dry-contact Kit (Y5) NT-RS485Y5 (optional) | 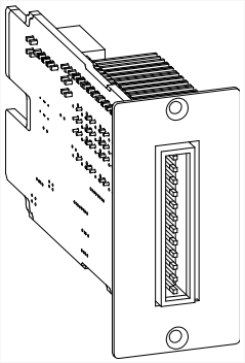 | Slot 2 (optional) |
| Protocol Transfer Kit NT-MODBUS (optional) | 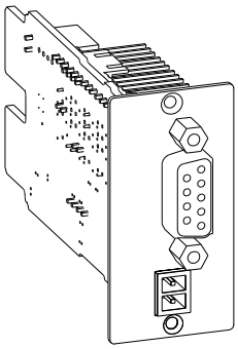 | Slot 1/Slot 2 (optional) |

| Communication method tch | map | Communication port |
|---|---|---|
| 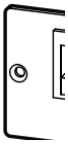 SNMP card (optional) | 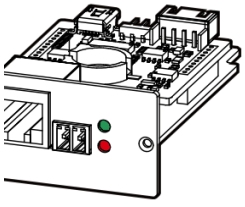 | |

### RS485

The UPS communicates with a PC through its RS485 serial port. The pin assignment between the UPS and PC RS485 ports is shown in Table 2-4.

**TABLE 2-4** Pin assignment of the RS485 port between UPS and PC

| RS485 port of UPS | RS485 port of PC |
|---|---|
| A | A (+) |
| B | B (-) |

> **NOTE**
> The standard RS485 port on the rear panel cannot be used when slot 2 is occupied.

### DRY CONTACT

The dry contacts can be used for control signals or to transmit alarms. Their functions are set on the touch screen.

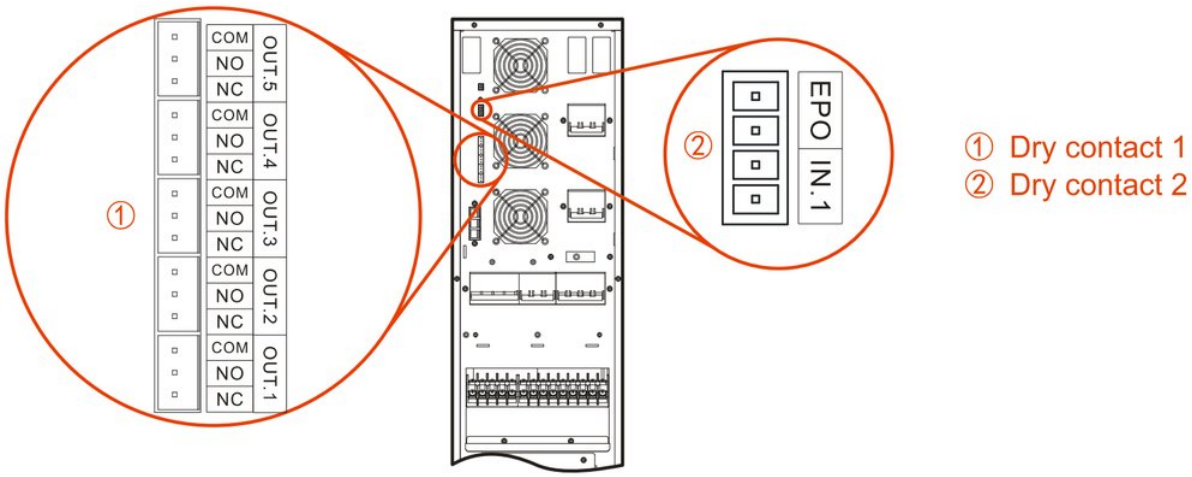


**FIGURE 2-7** Dry contact position of 10K/15K/20K UPS

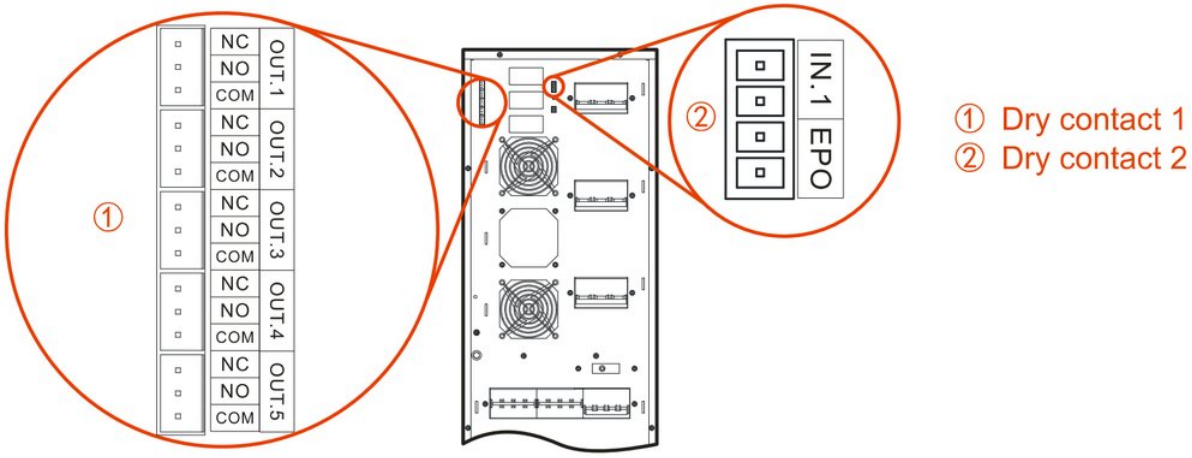


**FIGURE 2-8** Dry contact position of 30K/40K UPS

> **NOTE**
> The dry contacts are in the same position on the 30K and 40K UPS; the figure above shows the 30 kVA model.

**CAUTION**

Relay dry contact rating: 277 Vac / 30 Vdc / 10 A; relay coil voltage 12 V.

**TABLE 2-5** Dry contact functions illustration

| No. | Terminal marking | | Function illustration | Remarks |
|---|---|---|---|---|
| Dry contact 1 | OUT.1 | NC NO COM | When the signal is active, NO closes to COM and NC opens. The signal is settable; see the note below. Default is mains abnormal. | NC: normally closed; NO: normally open; COM: common port. |
| | OUT.2 | NC NO COM | When the signal is active, NO closes to COM and NC opens. The signal is settable; see the note below. Default is bypass abnormal. | |
| | OUT.3 | NC NO COM | When the signal is active, NO closes to COM and NC opens. The signal is settable; see the note below. Default is battery abnormal. | |
| | OUT.4 | NC | When the signal is active, NO closes to COM and | |
| | | NO | NC opens. The signal is settable; see the note below. Default is output abnormal. | |
| | | COM | | |
| | OUT.5 | NC | When the signal is active, NO closes to COM and NC opens. The signal is settable; see the note below. Default is overload alarm. | |
| | | NO | | |
| | | COM | | |
| Dry contact 2 | EPO | | The signal is active when the 2P terminal block is open. EPO signal; not settable. | - |
| | IN. 1 | | The trigger level is settable (NC/NO); by default the signal is active when shorted. The signal is settable; see the note below. Default is charge disabled. | - |

**NOTE**

The settable functions of the input and output dry contacts are described in Table 2-6 and Table 2-7.

**CAUTION**

1. The EPO input must be closed (shorted) for the UPS to operate.
2. If the EPO input opens, the UPS switches off both inverter and bypass output and the screen shows an EPO fault. The fault clears once the UPS is fully off and the EPO input is closed again.

**TABLE 2-6** Settable functions of the input dry contact

| NO. | Item | Illustration |
|---|---|---|
| 1 | Charge disabled | The charge disabled signal of battery: the UPS will alarm and turn off the battery charge when receiving this signal. The trigger level of signal is settable. |
| 2 | External MBB on | The breaker on signal of external maintenance bypass: the UPS raises an alarm, switches off the inverter output and transfers to bypass output when receiving this signal. The trigger level of signal is settable. |
| 3 | External BB status | The breaker disconnected signal of external battery: the UPS raises an alarm and reports a fault when receiving this signal. The trigger level of signal is settable. |
| 4 | UPS remote ON/OFF | The remote ON/OFF signal of UPS: the UPS switches on when receiving this signal. The trigger level of signal is settable. |
| 5 | Batt. ground fault | The fault signal of battery ground: the UPS raises an alarm and reports a fault when receiving this signal. The trigger level of signal is settable. |
| 6 | Discharge disabled | The discharge disabled signal of battery: the UPS raises an alarm and prevents battery discharge when receiving this signal. The trigger level of signal is settable. |

**TABLE 2-7** Settable functions of the output dry contacts

| NO. | Item | Illustration |
|---|---|---|
| 1 | Mains abnormal | When mains grid is abnormal, the signal is valid and triggers action of dry contact. |
| 2 | Bypass abnormal | When bypass is abnormal, the signal is valid and triggers action of dry contact. |
| 3 | Battery abnormal | When battery is abnormal, for example: battery low-voltage, battery over-voltage, battery over-temperature and battery disconnected, the signal is valid and triggers action of dry contact. |
| 4 | Output abnormal | When output is abnormal, the signal is valid and triggers action of dry contact. |
| 5 | Overload abnormal | When bypass or inverter of UPS is overloaded, the signal is valid and triggers action of dry contact. |
| 6 | General abnormal | When the UPS is alarming for fault, the signal is valid and triggers action of dry contact. |
| 7 | Normal operation | When the UPS is in the normal operation, the signal is valid and triggers action of dry contact. |
| 8 | Battery operation | When the UPS is in the battery operation, the signal is valid and triggers action of dry contact. |
| 9 | Bypass operation | When the UPS is in the bypass operation, the signal is valid and triggers action of dry contact. |
| 10 | UPS ON/OFF status | When the UPS is in on status, the signal is valid and triggers action of dry contact. |
| 11 | Battery low | When battery is low voltage, the signal is valid and triggers action of dry contact. |
| 12 | ECO mode | When the UPS output mode is ECO, the signal is valid and triggers action of dry contact. |
| 13 | Fan fault | When fan is abnormal, the signal is valid and triggers action of dry contact. |

### OPTIONAL COMMUNICATION

- Parallel port

Parallel Kit-T(2m) NT-PA (optional): Built-in card for CAN communication between the units when a single UPS is upgraded to a parallel system. The standard UPS is a single unit, so parallel operation requires the Parallel Kit-T(2m) NT-PA. Install it in the parallel port with the UPS switched off. Then power up the UPS and set it to parallel mode on the screen. For details, see the installation guide of the Parallel Kit-T(2m) NT-PA; for the screen settings, see 4.5.7 Device Configuration Page.

- Intelligent slot 1/Intelligent slot 2 1. Dry-contact Kit(Y5) NT-RS485Y5 (optional): Built-in card. Three output dry contacts: mains status, battery status and inverter status (configurable as bypass output status). Two input dry contacts: battery temperature sampling status (temperature compensation), battery breaker status (configurable as remote ON/OFF status).

2. Protocol Transfer Kit (optional): Built-in card. One RS485 channel is reserved for

lithium-battery communication (2P green terminal block); the other channel provides RS485 or RS232 on the DB9 connector (only one of the two can be used at a time).

3. SNMP card (optional): Built-in card; the protocol is configured through its web page, so

that the card can be used with different models and communication protocols. Click "**Management>Device management**>**Network adapter**>**Power**>**UPS**" to open the UPS list page, then click "Edit" to open the "Device management parameters" page and set Communication protocol to WRWF-1201-04_3I3O. Click "**Setting**>**Serial port setting**" to open the serial port list page and set: Interface standard RS232, Baud rate 9600, Data bit 8, Stop bit 1, Verification method No check. Communication works only after these settings have been made.

> **NOTE**
> For details, see the installation guide of the optional communication card.

### 2.1.4 Accessories

Each UPS is supplied with three 200 mm short-circuit wires for linking the mains input to the bypass input. Their position is shown in 3.5.1 UPS Wiring Operation.

When an external battery is used, an optional extension battery wiring assembly is available to connect it to the UPS. Its position is shown in 3.5.2 Wiring Between UPS and External Battery.

The 10K/15K/20K UPS has two types of optional connector jumper (1# and 2#), as shown in Table 2-8. the 30K/40K UPS has two types (3# and 4#), as shown in Table 2-9. Fit the connector jumpers to the wiring terminals as required. Their position for each mode is shown in 3.5.1 UPS Wiring Operation.

#### 10K/15K/20K UPS

**TABLE 2-8** Accessories

| Name | Illustration | Sketch map |
|---|---|---|
| Short circuit wire of mains- and-bypass | The length is 200mm | 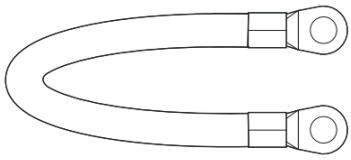 |
| 10~20K extension battery wiring assembly (optional) | 1m or 3m of the wiring length for selection (optional) | 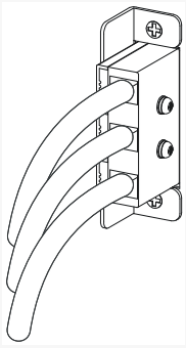 |
| 1# connector jumper | 2PIN connector jumper (optional) | 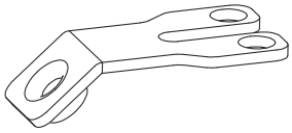 |
| 2# connector jumper | 3PIN connector jumper (optional) | 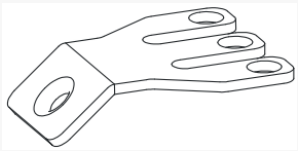 |

### 30KVA/40KVA

**TABLE 2-9** Accessories

| Name | Illustration | Sketch map |
|---|---|---|
| Short circuit wire of mains- and-bypass | The length is 200mm | 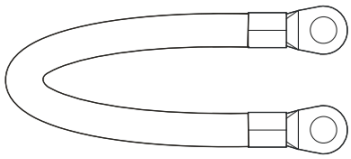 |
| 30~40K extension battery wiring assembly (optional) | 1m or 3m of the wiring length for selection (optional) | 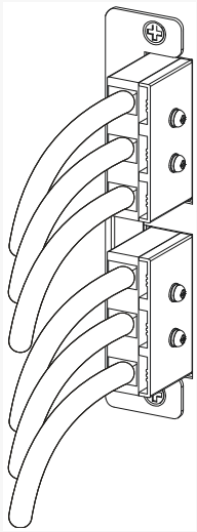 |
| 3# connector jumper | 2PIN connector jumper (optional) |  |
| 4# connector jumper | 3PIN connector jumper (optional) | 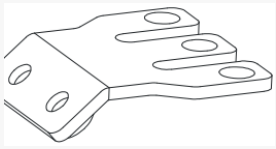 |

## 2.2 Work Principle

### 2.2.1 Work Principle Diagram

The operating principle of the UPS is shown in Figure 2-9.

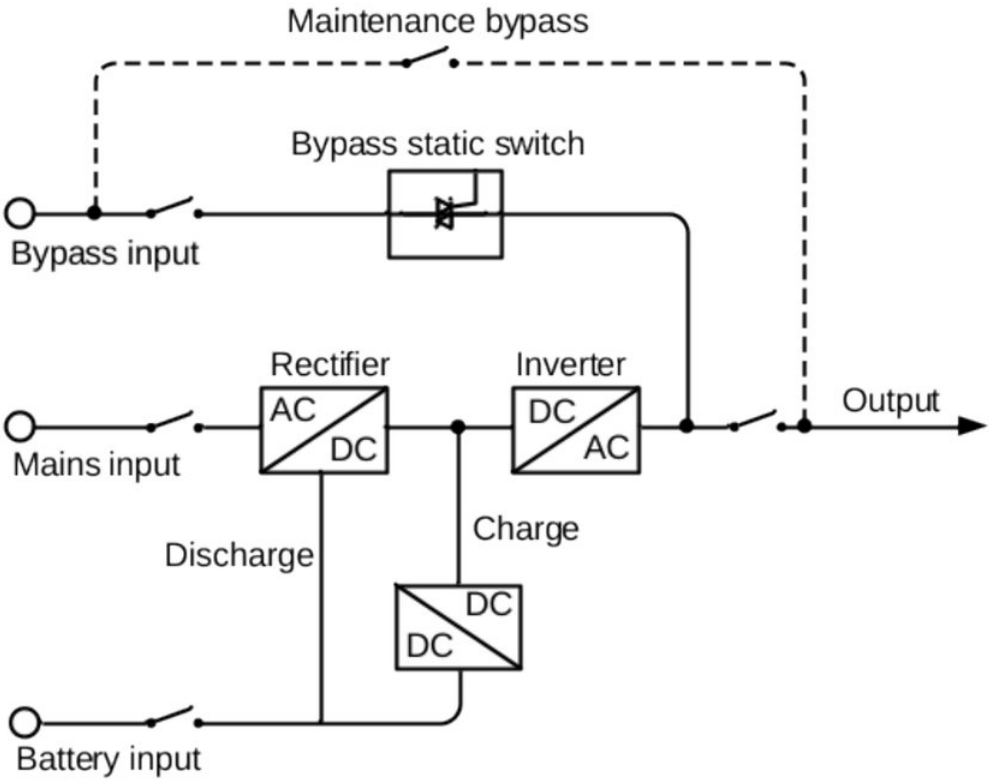


**FIGURE 2-9** Work principle diagram

The 10K-40K series UPS consists of functional modules such as rectifier/PFC, inverter, charger and bypass static switch. Its inputs are mains, bypass and battery; its outputs are inverter output, bypass output and maintenance bypass output.

When the mains is normal, the rectifier starts and the charger charges the battery. While the UPS is off, the output is supplied from the bypass if the bypass is normal. When the UPS is switched on, the rectifier/PFC converts the mains to the DC bus voltage, the inverter produces a pure sine-wave AC output, and the load is transferred from bypass output to inverter output (if equipped).

When the mains fails, the rectifier/PFC boosts the battery voltage to the DC bus voltage and the inverter supplies pure sine-wave AC power to the load. When the mains returns to normal, the UPS returns automatically from battery mode to mains mode.

## 2.2.2 Work Mode

HOW IT WORKS **Operating modes at a glance**

### Normal (online) mode

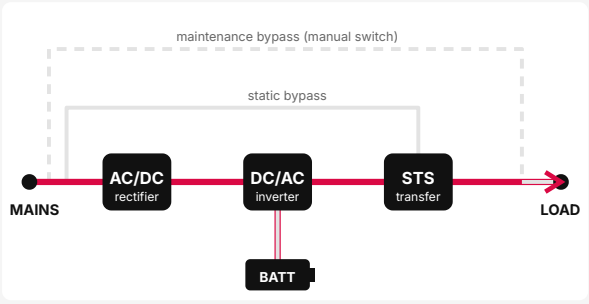


Mains present: the rectifier and the inverter supply the load with regulated power; the battery is kept charged.

### Battery mode

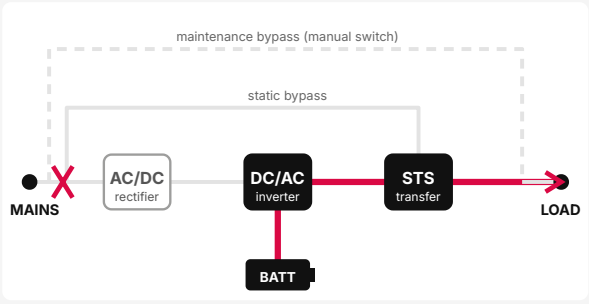


Mains outside its limits or missing: the battery feeds the inverter, with no break for the load.

### Bypass mode

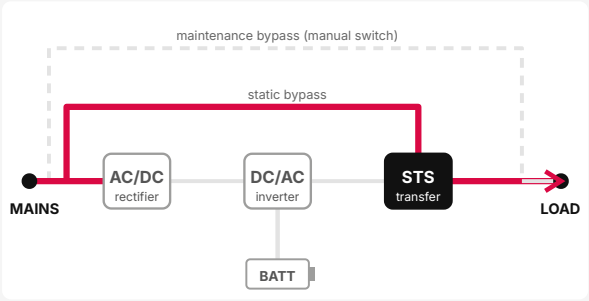


Overload, fault or inverter off: the load is supplied from the mains through the static bypass.

### ECO mode

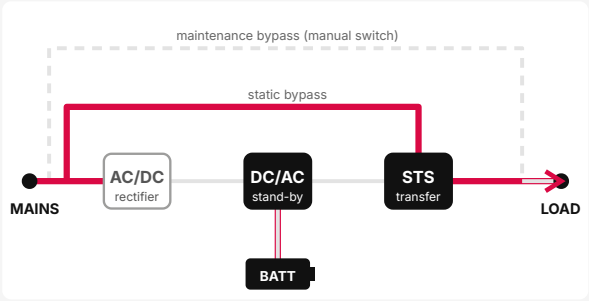


Mains inside the ECO window: the load runs on the bypass for the highest efficiency; the inverter takes over if the mains goes out of range.

### Maintenance bypass

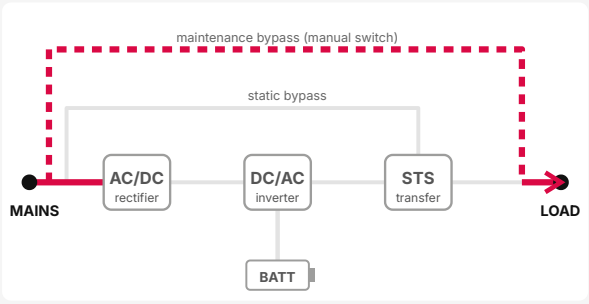


For service: the load is fed from the mains by the manual switch and the UPS can be switched off. Hazardous voltage stays on the terminals.

power flow working idle

The UPS has five operating modes: normal mains power supply mode, battery inverter mode, bypass power supply mode, ECO power supply mode and maintenance bypass power supply mode.

### NORMAL MAINS POWER SUPPLY MODE

When the mains is normal, the UPS runs in mains inverter mode and charges the battery at the same time, as shown in Figure 2-10.

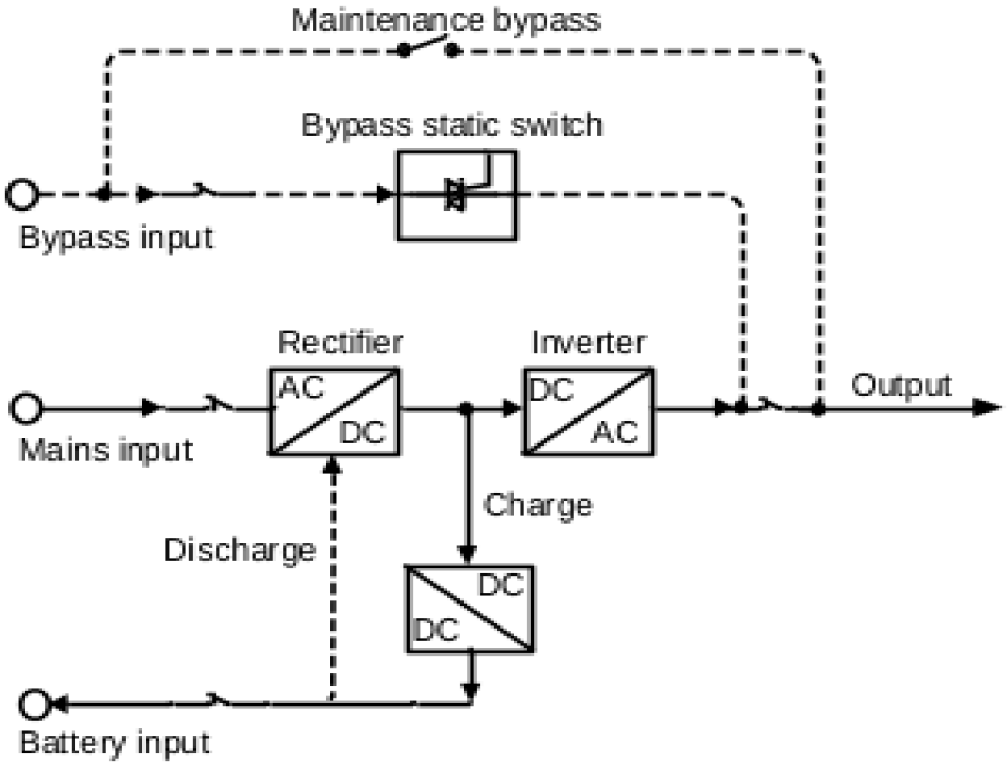


**FIGURE 2-10** Normal mains power supply mode (the solid line stands for the energy flow direction)

### BATTERY INVERTER MODE

When the mains fails, the rectifier switches immediately to the battery input and boosts the battery voltage to maintain the DC bus, so that the inverter output continues without interruption, as shown in Figure 2-11.

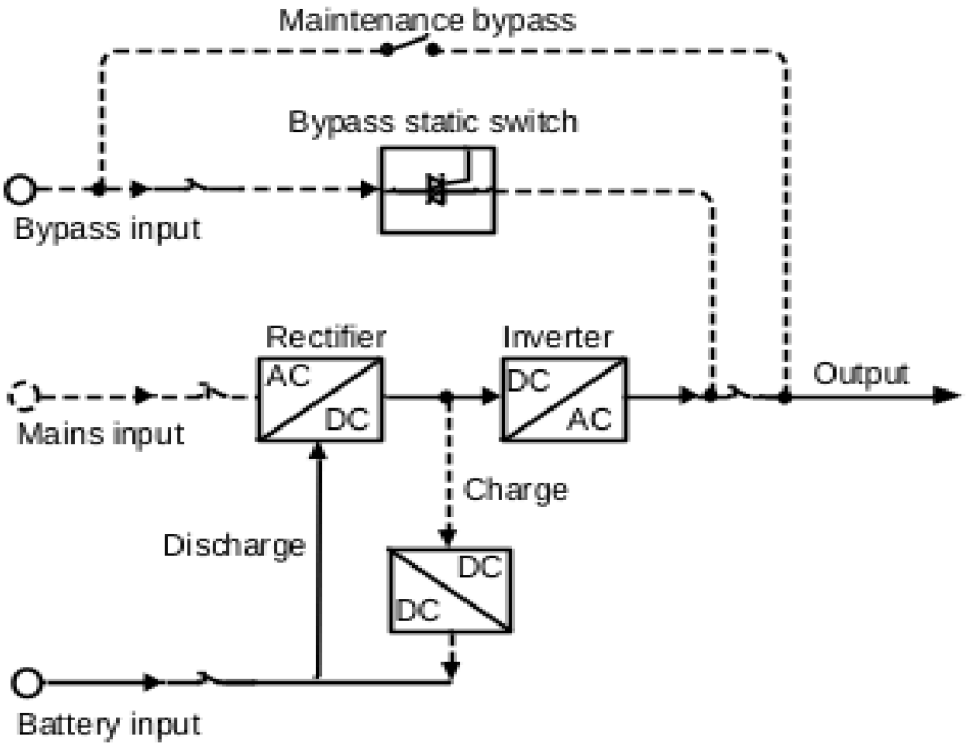


**FIGURE 2-11** Battery inverter mode (the solid line stands for the energy flow direction)

If the mains returns to normal before the battery stops discharging, the rectifier switches back to the mains input automatically and charges the battery again: the UPS returns to normal mains power supply mode. If the mains does not return and the battery runs down, the UPS gives an audible and visual alarm and stops at the battery low-voltage point; the buzzer then gives a long beep and the load loses power. If the mains is still completely absent, the UPS shuts down completely about 1 min later to prevent deep discharge and protect the service life of the battery. When the mains returns, the UPS starts automatically and returns to normal mains power supply mode.

### BYPASS POWER SUPPLY MODE

When the bypass voltage is normal, the UPS supplies the load from the bypass while it is off, or when a fault occurs while it is on (such as inverter output overload, over-current surge or IGBT over-temperature). When the UPS is on and the fault has cleared, it returns to inverter output. If the same fault occurs more than 5 times in a short time, the UPS stays on bypass until it is switched off manually or loses power; remove the fault and restart the UPS to resume normal operation.

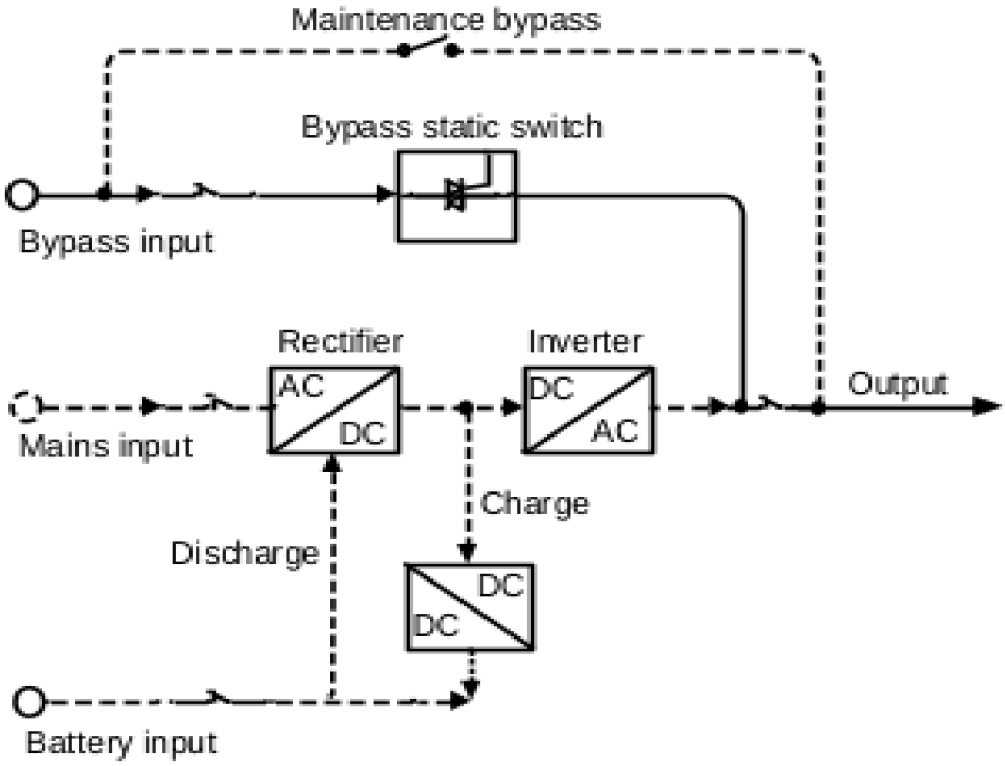


**FIGURE 2-12** Bypass power supply mode (the solid line stands for the energy flow direction)

### ECO POWER SUPPLY MODE (SINGLE UPS ONLY)

In ECO mode the load is supplied preferentially from the bypass while the bypass voltage is normal; when the bypass voltage is abnormal, the load is transferred to the inverter. ECO mode is an economy mode: for loads that do not need fully conditioned power, it can be selected to reduce energy consumption. In ECO mode the UPS efficiency reaches up to 99 %.

### MAINTENANCE BYPASS POWER SUPPLY MODE

When the UPS needs maintenance and the load supply must not be interrupted, the inverter is shut down and the UPS runs on bypass: the cover interlock switch opens automatically when the maintenance bypass cover is removed. Then switch on the maintenance bypass breaker and switch off the mains input, bypass input and output breakers. During manual maintenance bypass, the load is supplied with AC power through the maintenance bypass breaker. The UPS internal circuits are then de-energised (only the maintenance bypass circuit carries power to the load), so maintenance can be carried out safely.

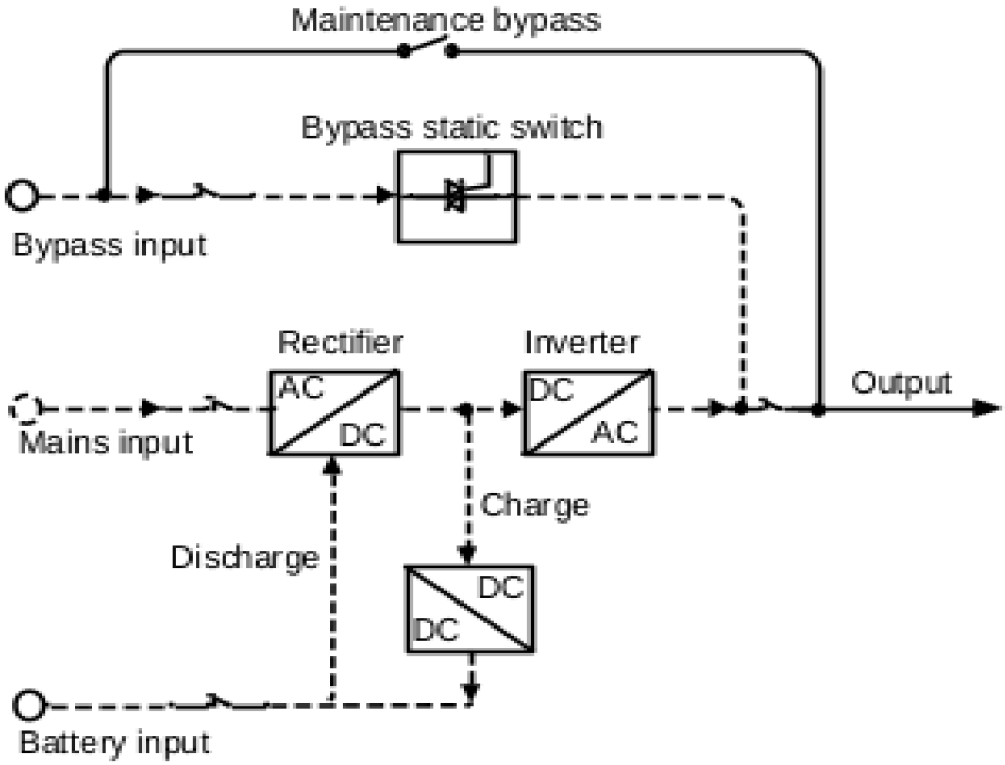


**FIGURE 2-13** Maintenance bypass power supply mode (the solid line stands for the energy flow direction)

CHAPTER 3

# 03 Installation

This chapter describes the installation of the UPS: unpacking and inspection, cable selection, installation, electrical connection, etc.

IN THIS CHAPTER


3.1 Announcements
3.2 Installation Preparation
3.3 Transport and Unpacking
3.4 Mechanical Installation
3.5 Electrical Connection


ROADMAP **From delivery to operation**

1. **Read the safety instructions** — Section 1.1
2. **Unpack and check the delivery** — Section 3.3
3. **Choose the place and prepare the cables and breakers** — Section 3.2
4. **Install and connect** — Section 3.5
5. **Start** — Section 5.2
6. **Check the display and the settings** — Section 4.5
7. **Look after** — Section 5.5

## 3.1 Announcements

- Use insulated tools to avoid electric shock.
- The terminals can carry hazardous voltage: make sure they are de-energised before connecting any cable.
- Place the UPS level on the floor; avoid tilting and uneven floors.
- DO NOT place objects on the UPS or sit on it.

## 3.2 Installation Preparation

### 3.2.1 Tools

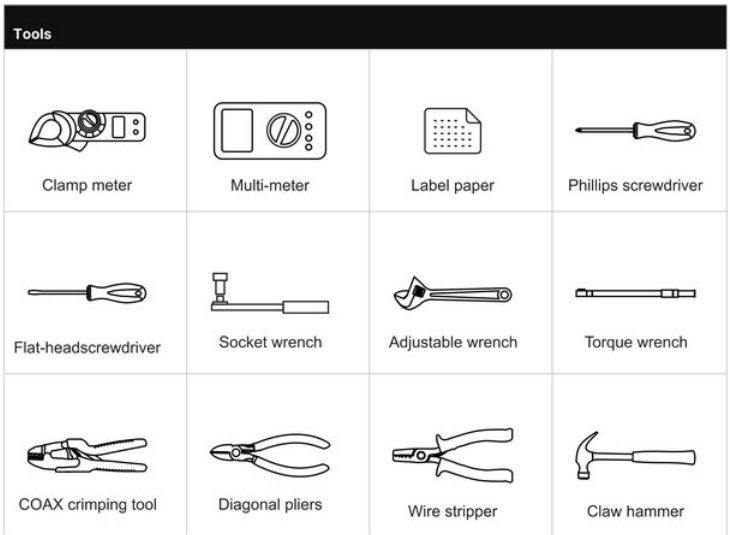

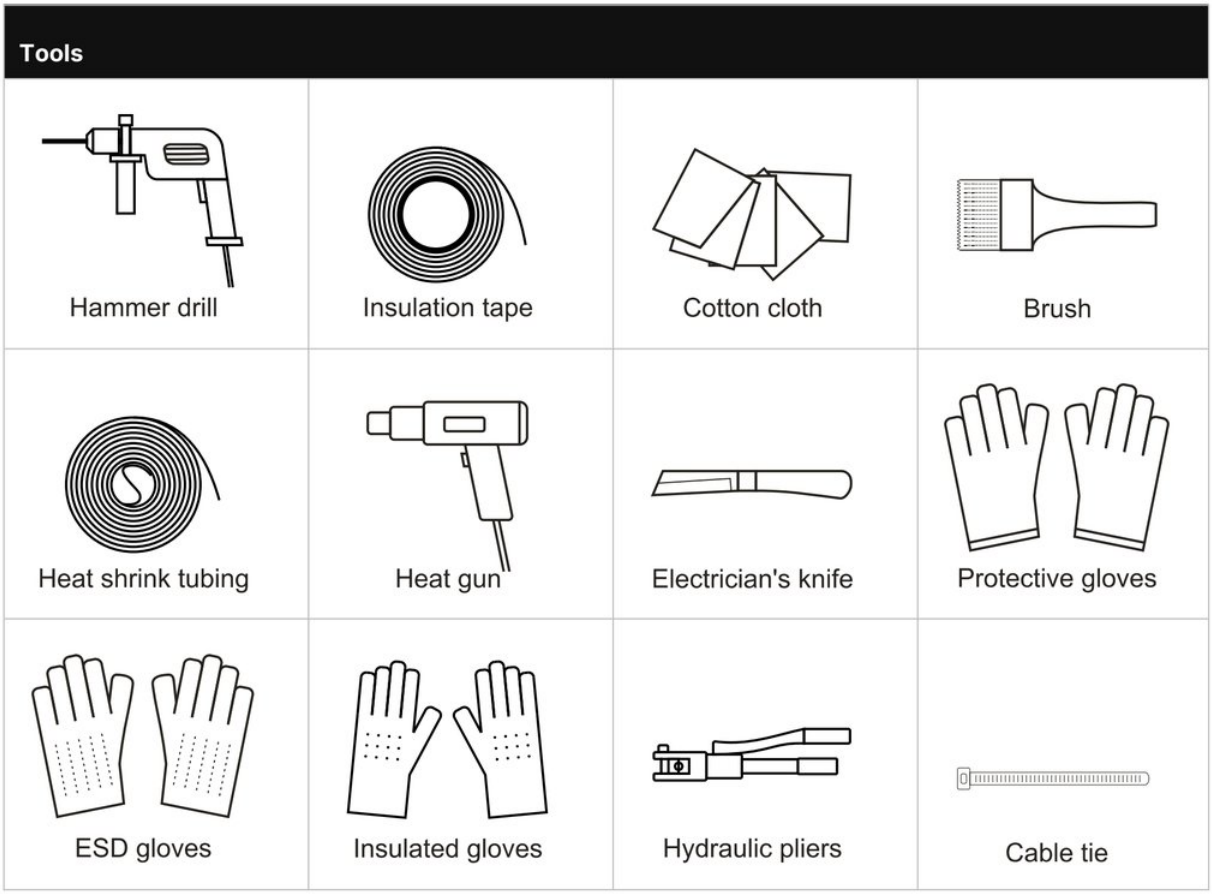


### 3.2.2 Install Environment

The installation site must be well ventilated and away from water, heat sources and flammable or explosive materials. Do not install the UPS in direct sunlight or where there is dust, volatile gas, corrosive substances or a high salt content in the air.

### 3.2.3 Install Space

The installation site must have enough space for the device. Keep a clearance of at least 300 mm between the rear panel of the UPS and the wall or other equipment.

### 3.2.4 Select Breaker & Wires

The AC input and output cables, the DC input cables and the corresponding breakers are selected according to the maximum steady-state phase current of the UPS. Table 3-1 and Table 3-2 give the maximum steady-state phase current for each operating mode, Table 3-3 and Table 3-4 the rated current of the recommended breakers, Table 3-5 to Table 3-7 the minimum recommended cable cross-sections, and Table 3-8 and Table 3-9 the matching wiring terminals. Select the cables and breakers according to Table 3-1 to Table 3-9.

**TABLE 3-1** UPS max. steady state phase current

| Type | 10K | | | 15K | | | 20K | | |
|---|---|---|---|---|---|---|---|---|---|
| | 33 mode | 31 mode | 11 mode | 33 mode | 31 mode | 11 mode | 33 mode | 31 mode | 11 mode |
| AC input (A) | 19.5 | 19.5 | 58.6 | 27.5 | 27.5 | 82.5 | 35.5 | 35.5 | 106.4 |
| Bypass input (A) | 19.5 | 58.6 | 58.6 | 27.5 | 82.5 | 82.5 | 35.5 | 106.4 | 106.4 |
| DC input (A) | 54.8 | 54.8 | 54.8 | 41.1 | 41.1 | 41.1 | 54.8 | 54.8 | 54.8 |
| AC output (A) | 15.2 | 45.6 | 45.6 | 22.7 | 68.2 | 68.2 | 30.3 | 90.9 | 90.9 |

**TABLE 3-2** UPS max. steady state phase current

| Type | 30K | | 40K | |
|---|---|---|---|---|
| | 33 mode | 31 mode | 33 mode | 31 mode |
| AC input (A) | 65.7 | 65.7 | 81.7 | 81.7 |
| Bypass input (A) | 65.7 | 197.1 | 81.7 | 245.0 |
| DC input (A) | 82.2 | 82.2 | 109.6 | 109.6 |
| AC output (A) | 45.5 | 136.4 | 60.6 | 181.8 |

### 3.2.5 Select Input Breaker

Install an upstream circuit breaker matching the UPS rating to isolate the UPS from the mains (a breaker with feedback contact and double-pole disconnection is recommended). To allow for the battery charging power and the inrush current at switch-on, rate it 1.5 to 2 times the maximum UPS input current. Do not use a breaker with residual-current (earth-leakage) protection, to avoid nuisance tripping. The DC input breaker must be rated for more than 250 Vdc. For breaker selection, see Table 3-3 and Table 3-4.

**TABLE 3-3** Recommended breaker list

| Type | 10K | | | 15K | | | 20K | | |
|---|---|---|---|---|---|---|---|---|---|
| | 33 mode | 31 mode | 11 mode | 33 mode | 31 mode | 11 mode | 33 mode | 31 mode | 11 mode |
| AC input (A) | 32*3P | 32*3P | 80*1P | 63*3P | 63*3P | 100*3 P | 63*3P | 63*3P | 150*3P |
| Bypass input (A) | 32*3P | 80*1P | 80*1P | 63*3P | 100*3 P | 100*3 P | 63*3P | 100*3 P | 150*3P |
| DC input (A) | 100*3 P | 100*3 P | 100*3 P | 63*3P | 63*3P | 63*3P | 100*3 P | 100*3 P | 100*3 P |
| AC output (A) | 32*3P | 80*1P | 80*1P | 63*3P | 100*3 P | 100*3 P | 63*3P | 100*3 P | 100*3 P |

**TABLE 3-4** Recommended breaker list

| Type | 30K | | 40K | |
|---|---|---|---|---|
| | 33 mode | 31 mode | 33 mode | 31 mode |
| AC input (A) | 100*3P | 100*3P | 100*3P | 100*3P |
| Bypass input (A) | 100*3P | 250*1P | 100*3P | 300*1P |
| DC input (A) | 125*3P | 125*3P | 175*3P | 175*3P |
| AC output (A) | 100*3P | 200*1P | 100*3P | 250*1P |

**CAUTION**

Rated voltage of the recommended breakers: AC input, bypass input and AC output 250 Vac; DC input 250 Vdc.

### 3.2.6 Select Wires

**NOTE**

When the cross-section of a single cable would exceed 25 mm², it is recommended to use two cables in parallel.

The recommended cross-sections for AC input, output and battery cables are given in Table 3-5, Table 3-6 and Table 3-7. These values are for reference only and apply to cable lengths of about 5 m. If a cable is longer than 20 m, its cross-section must be increased.

**TABLE 3-5** Recommended cross-sectional area of wire (unit: mm², ambient temperature: 25 °C)

| Item | 33 mode | | | | |
|---|---|---|---|---|---|
| | 10K | 15K | 20K | 30K | 40K |
| Mains input live wire (U/V/W) | 4 | 6 | 6 | 16 | 16 |
| Mains input neutral wire (N) | 4 | 6 | 6 | 16 | 16 |
| Bypass input neutral wire (N) | 4 | 6 | 6 | 16 | 16 |
| Bypass input live wire (U/V/W) | 4 | 6 | 6 | 16 | 16 |
| Mains output live wire (U/V/W) | 4 | 6 | 6 | 16 | 16 |
| Mains output neutral wire (N) | 4 | 6 | 6 | 16 | 16 |
| DC input (BATT.+/N/-) | 10 | 10 | 10 | 2*10 | 2*10 |
| Grounding wire (PE) | 4 | 6 | 6 | 16 | 16 |

**TABLE 3-6** Recommended cross-sectional area of wire (unit: mm², ambient temperature: 25 °C)

| Item | 31 mode | | | | |
|---|---|---|---|---|---|
| | 10K | 15K | 20K | 30K | 40K |
| Mains input live wire (U/V/W) | 4 | 6 | 6 | 16 | 16 |
| Input neutral wire (N) | 16 | 25 | 25 | 2*25 | 2*25 |
| Bypass input live wire (L) | 16 | 25 | 25 | 2*25 | 2*25 |
| Mains output live wire (L) | 16 | 25 | 25 | 2*25 | 2*25 |
| Mains output neutral wire (N) | 16 | 25 | 25 | 2*25 | 2*25 |
| DC input (BATT.+/N/-) | 10 | 10 | 10 | 2*10 | 2*10 |
| Grounding wire (PE) | 2*10 | 2*10 | 2*10 | 25 | 25 |

**TABLE 3-7** Recommended cross-sectional area of wire (unit: mm², ambient temperature: 25 °C)

| Item | 11 mode | | |
|---|---|---|---|
| | 10K | 15K | 20K |
| Mains input live wire (L) | 16 | 25 | 25 |
| Input neutral wire (N) | 16 | 25 | 25 |
| Bypass input live wire (L) | 16 | 25 | 25 |
| Mains output live wire (L) | 16 | 25 | 25 |
| Mains output neutral wire (N) | 16 | 25 | 25 |
| DC input (BATT.+/N/-) | 10 | 10 | 10 |
| Grounding wire (PE) | 2*10 | 2*10 | 2*10 |

**TABLE 3-8** Cables and matching wiring terminals

| Cable cross-section (unit: mm²) | Wiring terminal type |
|---|---|
| 4 | RVS3.5-5 |
| 6 | RVS5.5-5 |
| 10 | RNBS8-5 |
| 16 | RNBS14-6 |
| 25 | RNBS22-6 |

The recommended wiring terminal types are listed in Table 3-8. If other terminals are used, check their dimensions against Table 3-9.

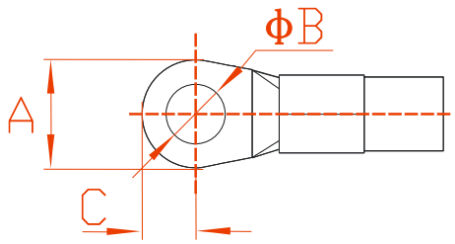


**FIGURE 3-1** Dimensions of wiring terminal

**TABLE 3-9** Dimension limits of wiring terminals

| Dimensions (unit: mm) | 10K/15K/20K | 30K/40K |
|---|---|---|
| A | ≤14.5 | ≤16.8 |
| B | ≥4 | ≥6.2 |
| C | ≤7.15 | ≤8.5 |

> **NOTE**
> The cables supplied with the UPS are certified (IEC/UL) and meet the applicable safety standards. Some supplied cables shorter than 0.5 m have a slightly smaller section than recommended; this is acceptable for these lengths.

## 3.3 Transport and Unpacking

### 3.3.1 Transport

> **CAUTION**
> 1. The UPS must be transported by trained professionals.
> 2. Handle the UPS gently during transport; avoid impacts and drops.
> 3. If the UPS is to be stored for a long time after unpacking, wrap it in its original plastic bag.

The UPS can be moved with a forklift or a pallet truck. When lifting, the centre of gravity of the device must be centred on the forks. Move the device slowly and steadily.

> **CAUTION**
> During transport, take care to avoid impacts and falls.
>
> Keep the UPS upright while moving it, and do not lower or lift it suddenly.



FIGURE 3-2 Forklift transportation

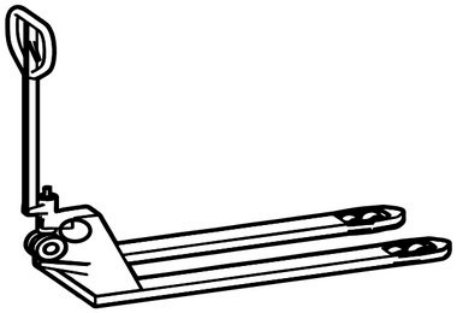

FIGURE 3-3 Pallet truck transportation

### 3.3.2 Unpacking

> **NOTE**
> Choose the unpacking site in advance, as close as possible to the installation site.

PROCEDURE

1. Check that the packaging is in good condition and has not been damaged in transit. If it is damaged, inform the carrier immediately.
2. Move the UPS to the designated site.
3. Open the outer packaging and take out the accessories.
4. Check the UPS.
   - Inspect the UPS for transport damage. If it is damaged, inform the carrier immediately.
   - Check against the packing list that all accessories are present and correct. If anything is missing or the model is wrong, note it and contact your local AEC office or distributor.
5. Lower the front panel of the crate to form a ramp.
6. After checking, use a socket wrench to remove the bolts that fix the UPS supporting plate to the wooden base (bolt positions as shown in Figure 3-4), then remove the supporting plate.

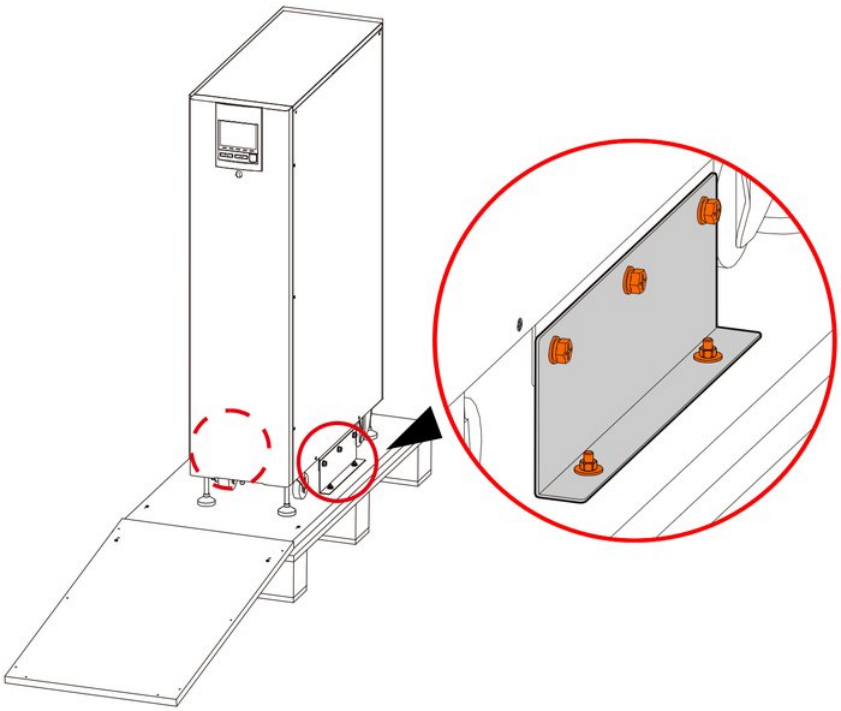

FIGURE 3-4 Bolts position

**NOTE**

The bolt positions are the same on all 10K-40K models; the figure above shows the 40 kVA model. The 10K/15K/20K UPS has no support feet.

7 Slowly slide the UPS down the ramp to the floor.

**CAUTION**

Moving the UPS requires two people (one on each side) to avoid tipping and personal injury.

## 3.4 Mechanical Installation

**NOTE**

This section describes installation with floor anchoring as an example; adapt the procedure to the actual site conditions.

PROCEDURE

1 Plan the installation position according to the device dimensions (see the outer-dimension drawings below) and the space requirements (see 3.2.3 Install Space).

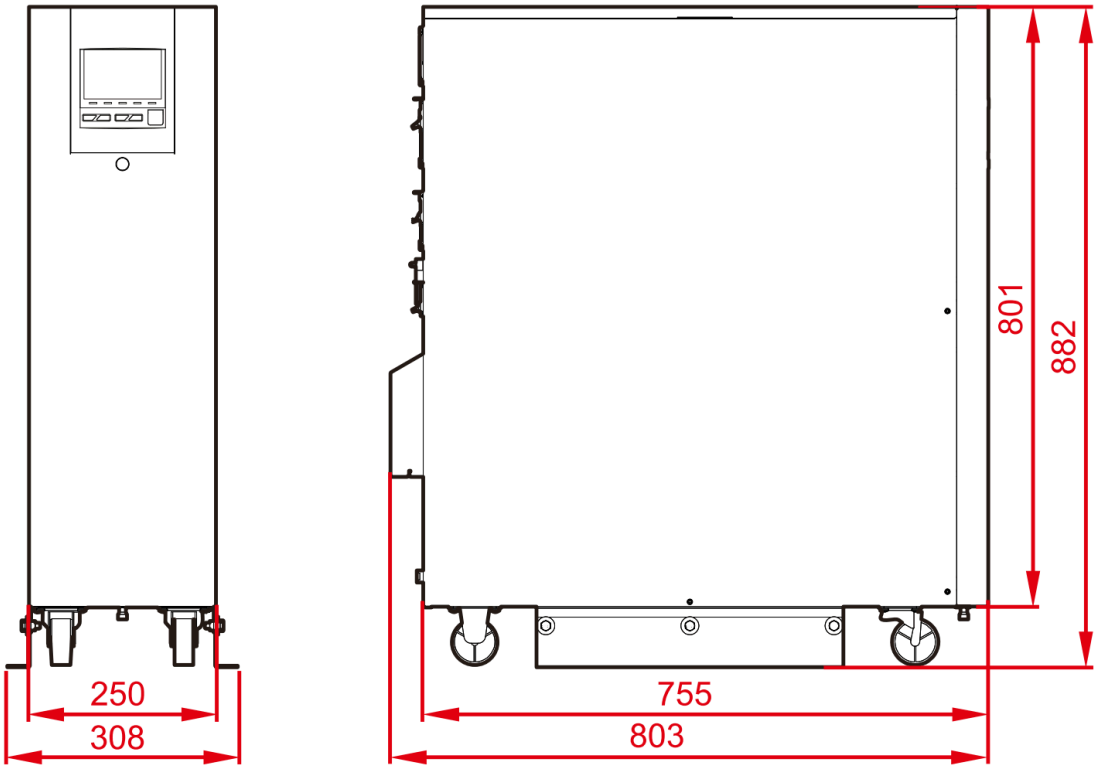


Outer dimensions of 10K/15K/20K UPS (unit: mm)

Outer dimensions of 30K/40K UPS (unit: mm)

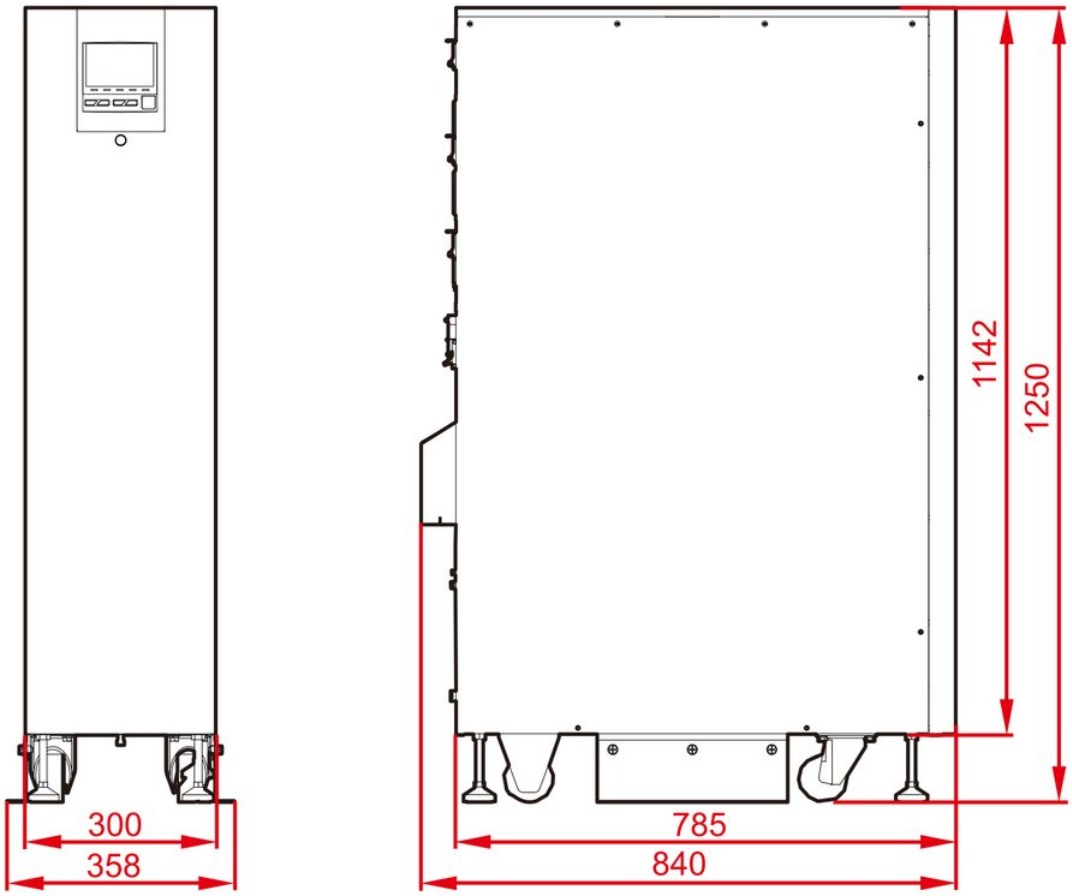


2 Using an impact drill, drill four φ10 holes in the floor according to the pedestal hole pattern. The hole pattern of each model is shown in Figure 3-5 and in the 30K/40K pedestal drawing below (drilling tolerance ±2 mm). Fit M8 expansion bolts; their structure and installation are shown in Figure 3-6.

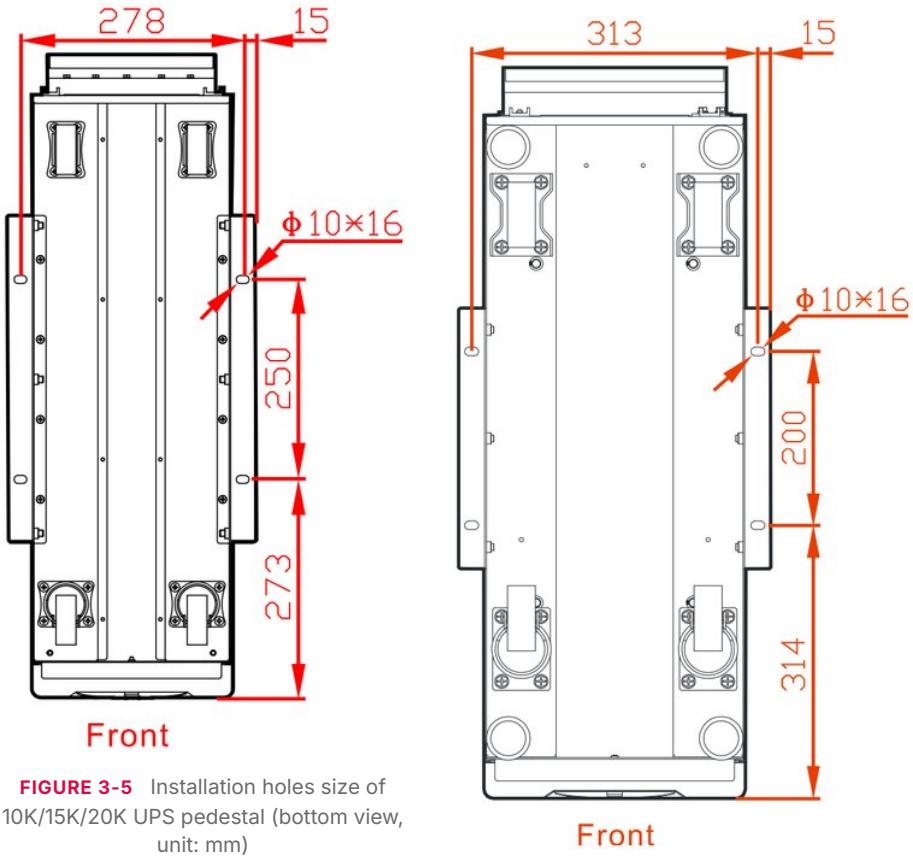


**FIGURE 3-5** Installation holes size of 10K/15K/20K UPS pedestal (bottom view, unit: mm)

Installation hole size of 30K/40K UPS pedestal (bottom view, unit: mm)

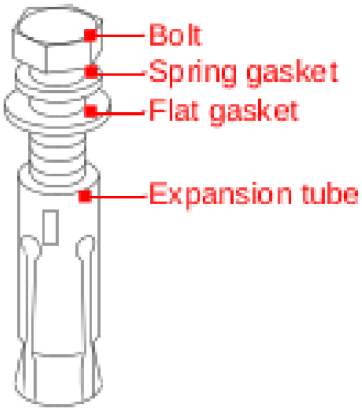


1. Drill holes on the installation ground by hammer drill.
2. Tighten the expansion bolts mildly, and put it to the hole vertically, and then knock the expansion bolt by rubber hammer till all the expansion tube into the hole.
3. Pre tighten the expansion bolt.
4. Screw out the bolt , take down the spring gasket and flat gasket.

**FIGURE 3-6** Expansion bolt structure and installation

**NOTE**

The expansion bolts must not protrude more than 50 mm.

3. Move the UPS above the holes, pre-lock the supporting plate (not fully locked, leave one-third to two-thirds of the screws). Move and align the bottom installation hole of the supporting plate with the expansion bolt. Fit the flat washer (Φ8) and spring washer (Φ8), then screw in the bolts. Tighten the six unlocked screws of supporting plate.
4. Then lower the UPS supporting feet by turning them anticlockwise until the UPS is level (30K/40K only).

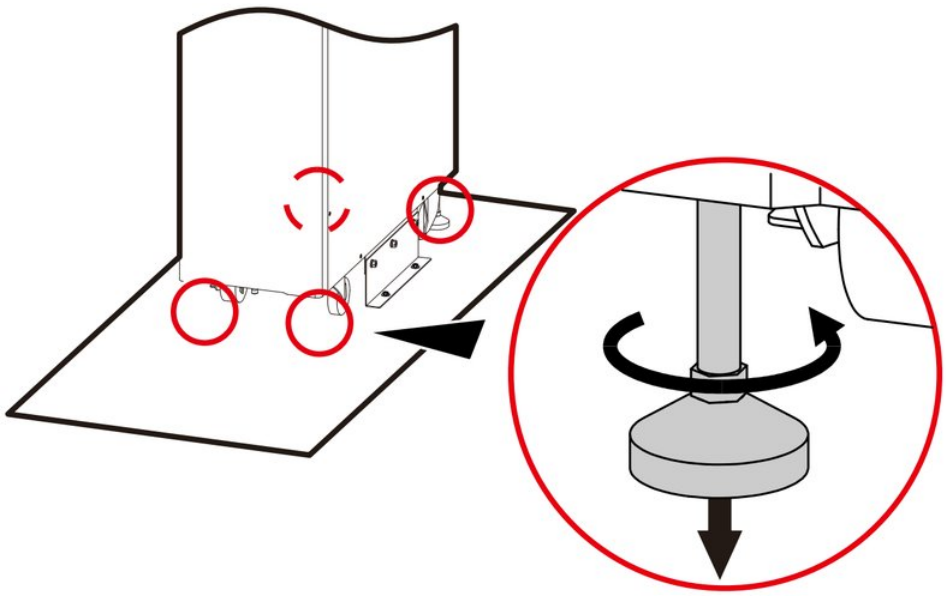

**FIGURE 3-7** Screw down the supporting feet brackets

**NOTE**

1. This step does not apply to the 10 kVA / 15 kVA / 20 kVA models, which have no support feet. 2. Turn the support feet clockwise to raise them and anticlockwise to lower them. 3. Do not adjust one foot only: adjust all four feet evenly, a little at a time, to avoid tilting or even damage to the device.

**CAUTION**

Move the UPS steadily and avoid tilting it.

## 3.5 Electrical Connection

**WARNING**

1. Before wiring, make sure that all UPS breakers (mains input, bypass, battery and output) and the upstream breakers are open. Never connect live cables.
2. Do not route power cables where they can be stepped on or tripped over.
3. DO NOT move the UPS after the cables are connected.

### 3.5.1 UPS Wiring Operation

**10K/15K/20K UPS**

**NOTE**

The wiring procedure is the same for all 10K-20K models; the 10 kVA model is shown below as an example.

PROCEDURE

1. Remove the wiring cover plate. There are notches at the bottom of the cover plate: first remove the cover plate screws, then lift the wiring cover plate upwards to remove it.

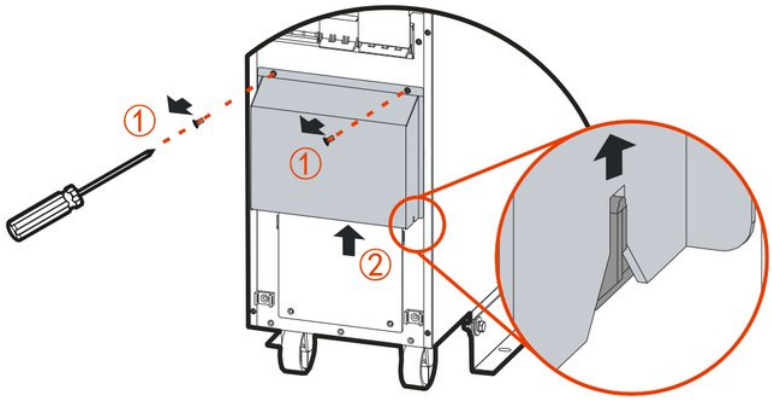


**FIGURE 3-8** Remove the wiring cover plate

2. The 10K/15K/20K UPS has three modes, 33, 31 and 11; the terminal markings are shown in Figure 3-9. The wiring terminals differ slightly between 33, 31 and 11 mode, as shown in Figure 3-10 to Figure 3-13.

| M | INPUT | | | | BYPASS | | | OUTPUT | | | | |
|---|---|---|---|---|---|---|---|---|---|---|---|---|
| 33 | U | V | W | N | U | V | W | U | V | W | N | ⏚ |
| 31 | U | V | W | N | L | | | L | | | N | |
| 11 | L | | | N | L | | | L | | | N | |

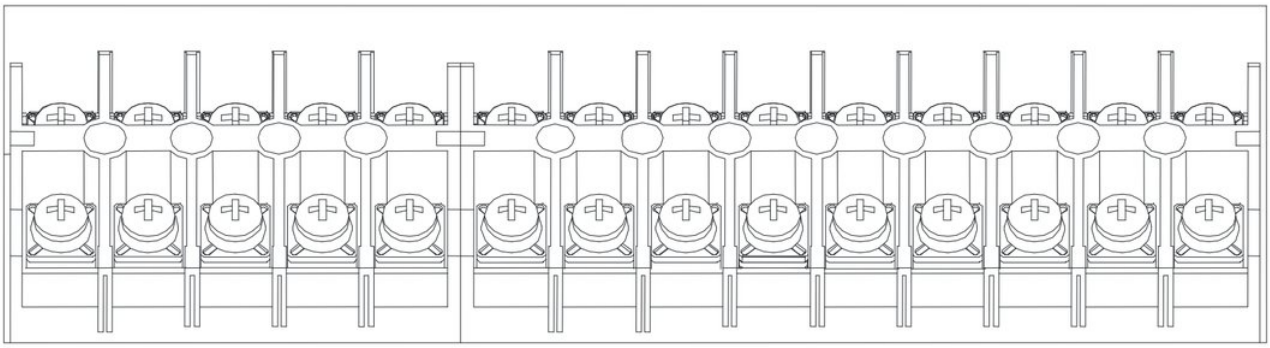

**FIGURE 3-9** Wiring terminal marking

**NOTE**

Phases are marked U, V, W (equivalent to L1, L2, L3; A, B, C; or R, S, T).

- 33 mode Wiring method 1: Different input sources for mains and bypass.

When the mains input and bypass input come from different sources, they are connected separately, as shown in Figure 3-10.

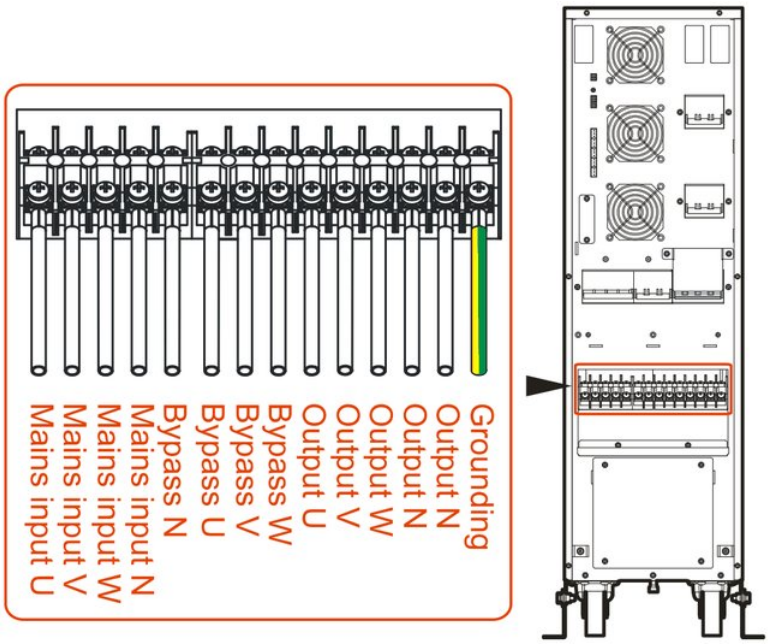


**FIGURE 3-10** Wiring diagram 1 of 33 mode

Wiring method 2: Common input source for mains and bypass.

When the mains input and bypass input come from the same source, the bypass input is linked to the mains input with the short-circuit wires, as shown in Figure 3-11.

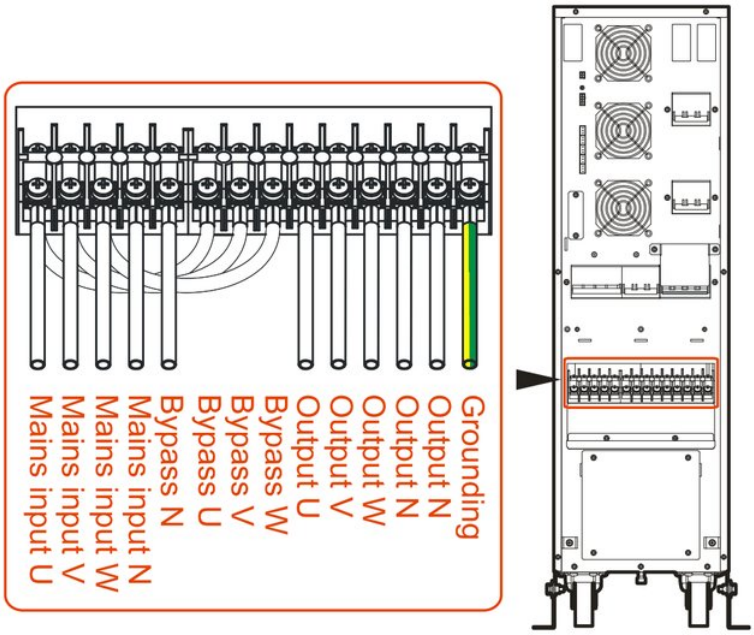


**FIGURE 3-11** Wiring diagram 2 of 33 mode

- 31 mode Take a pair of 1# and 2# connector jumpers (optional accessories) and fit them to the UPS wiring terminals (as shown in Figure 3-12). Then connect the cables to the corresponding terminals according to the wiring diagram.
- 11 mode

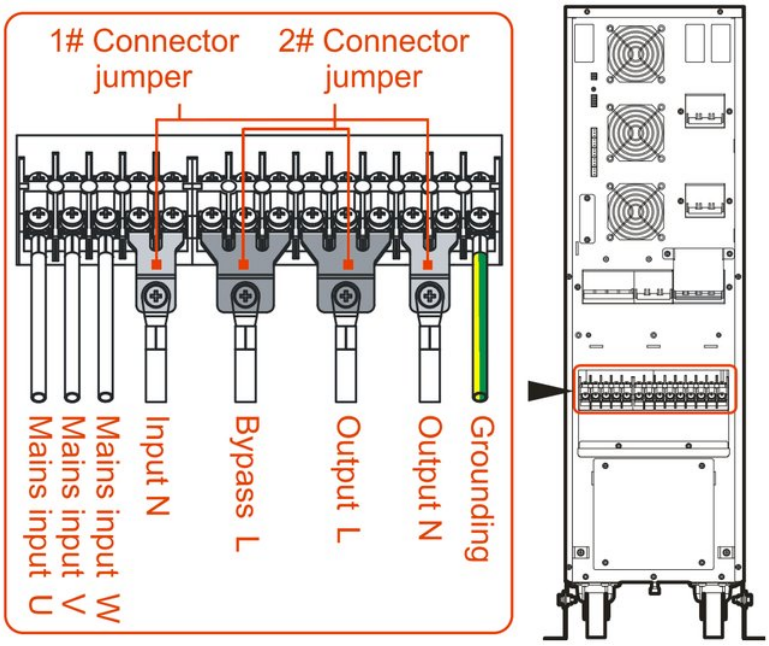


**FIGURE 3-12** Connector jumper and wiring diagram of 31 mode

Take a pair of 1# connector jumpers and three 2# connector jumpers (optional accessories) and fit them to the UPS wiring terminals (as shown in Figure 3-13). Then connect the cables to the corresponding terminals according to the wiring diagram.

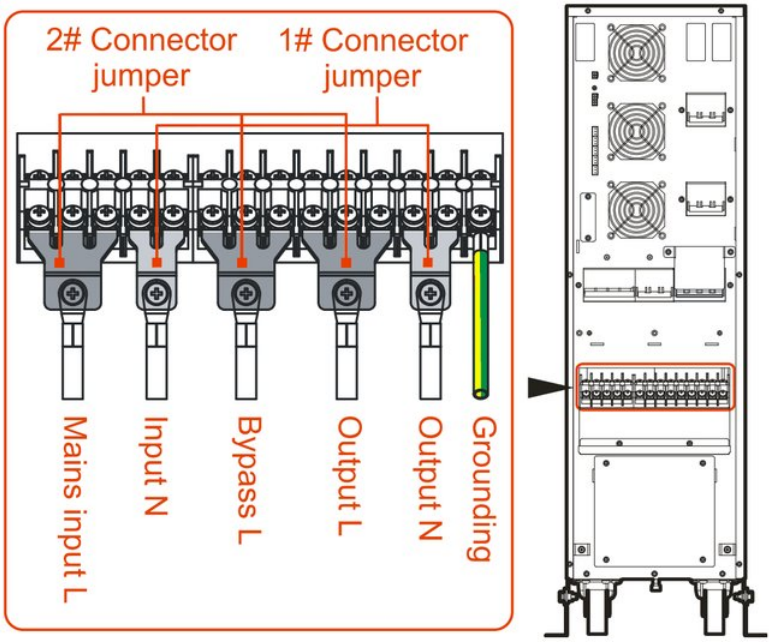


**FIGURE 3-13** Connector jumper and wiring diagram of 11 mode

**⚠ CAUTION**

1. To change the mode of a 10K-20K series UPS: 1) switch off the UPS completely; 2) rewire strictly as shown in the steps above; 3) connect only the mains, keeping the bypass breaker open; 4) set the work configuration on the screen to match the actual wiring; 5) check again that the wiring matches the screen configuration, then start the UPS; 6) close the bypass breaker once the inverter output is normal.
2. For the corresponding screen settings, see 4.5.7 Device Configuration Page.
3. For example: to set a 10 kVA UPS to 31 mode, wire it according to the 31-mode wiring diagram and set the work configuration on the screen to 31.

**NOTE**

1. In 31/11 mode with separate sources for input and bypass, connect the neutral (N) to the input N terminal. 2. After wiring, check that all cables are connected correctly and none is missing.

**CAUTION**

1. On the 10kVA (S)/15kVA (S)/20kVA (S) the external battery port is live (internal batteries): take care when wiring. Do not remove its cover unless you are connecting an external battery.
2. Wire the UPS strictly as shown in the figures to avoid short circuits.
3. Before refitting the wiring cover plate, make sure that all cables are connected to the terminals properly and securely.

3 Reinstall the wiring cover plate.

4 Divide the cables into two bundles and fix them to the bottom of the device with cable ties.

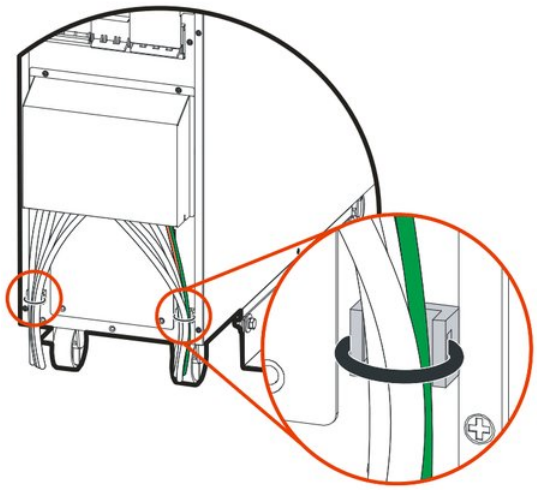

**FIGURE 3-14** Wires fixation

**NOTE**

1. The 10kVA (T)/15kVA (T)/20kVA (T) has a fan on the rear panel: do not block the air vents when fixing the cables. 2. If an external battery is connected, fix its cables together with the other cables at the bottom of the device with cable ties once the battery wiring is complete.

### 30KVA/40KVA

**NOTE**

The wiring procedure is the same for the 30K and 40K models; the 40 kVA model is shown below as an example.

PROCEDURE

1 Remove the wiring cover plate. There are notches at the bottom of the cover plate: first remove the cover plate screws, then lift the wiring cover plate upwards to remove it, as shown in Figure 3-15. Then unscrew the bolt on the mode connector cover plate and remove it, as shown in Figure 3-16.

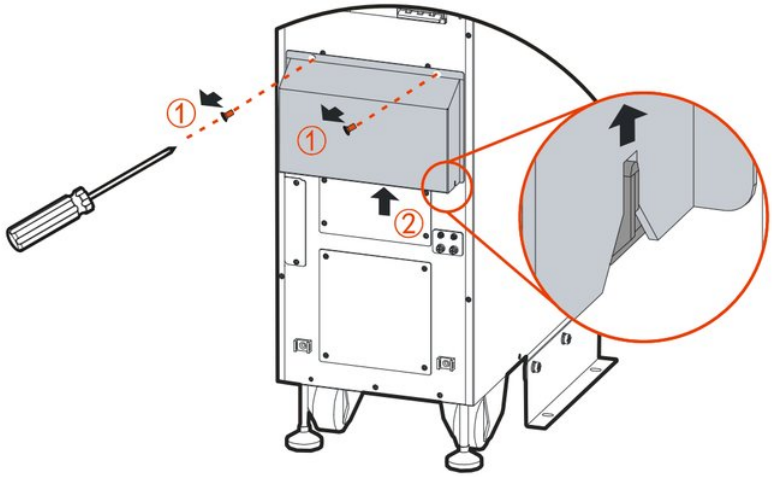


**FIGURE 3-15** Remove the wiring cover plate

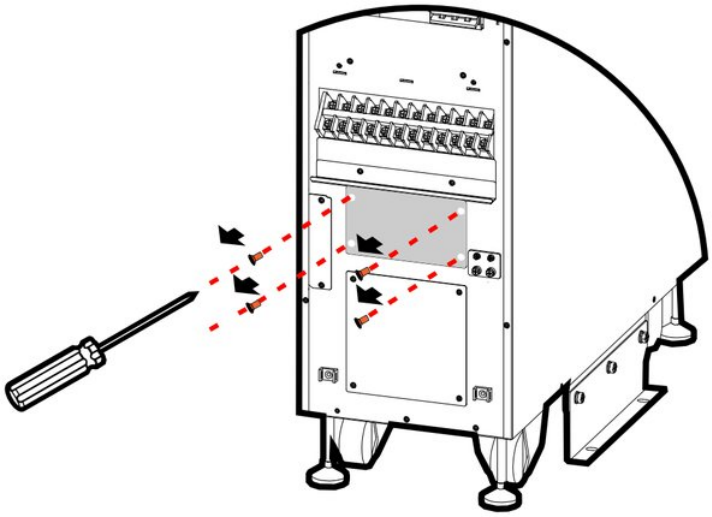

**FIGURE 3-16** Unscrew the bolt on the mode connector cover plate

2 The 30K/40K UPS has two modes, 33 and 31; the terminal markings are shown in Figure 3-17. The mode connector is factory-set to 33 mode (as shown in Figure 3-18); to change the mode, the position of the mode connector and the wiring must be changed.

| M | INPUT | | | | BYPASS | | | | OUTPUT | | | |
|---|---|---|---|---|---|---|---|---|---|---|---|---|
| 33 | U | V | W | N | N | U | V | W | U | V | W | N |
| 31 | U | V | W | N | | L | | | L | | N | |

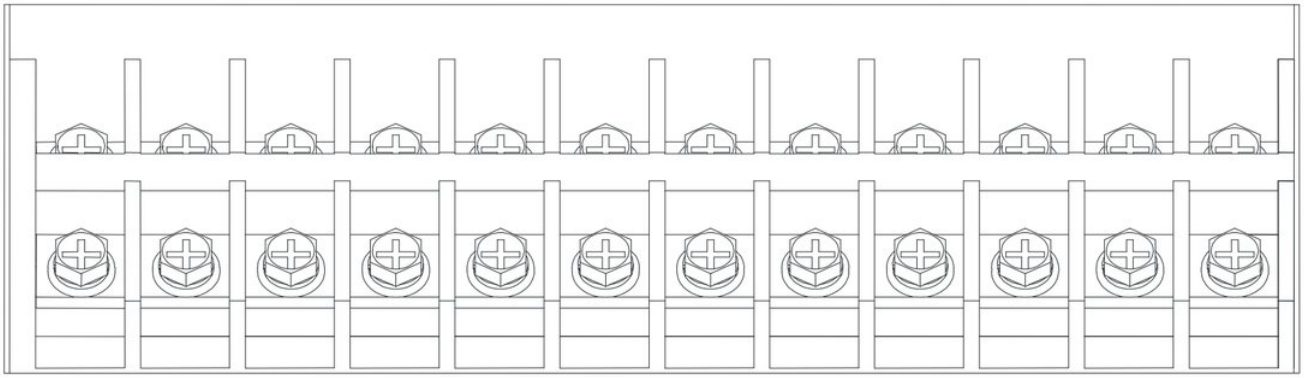

**FIGURE 3-17** Wiring terminal marking

**NOTE**

Phases are marked U, V, W (equivalent to L1, L2, L3; A, B, C; or R, S, T).

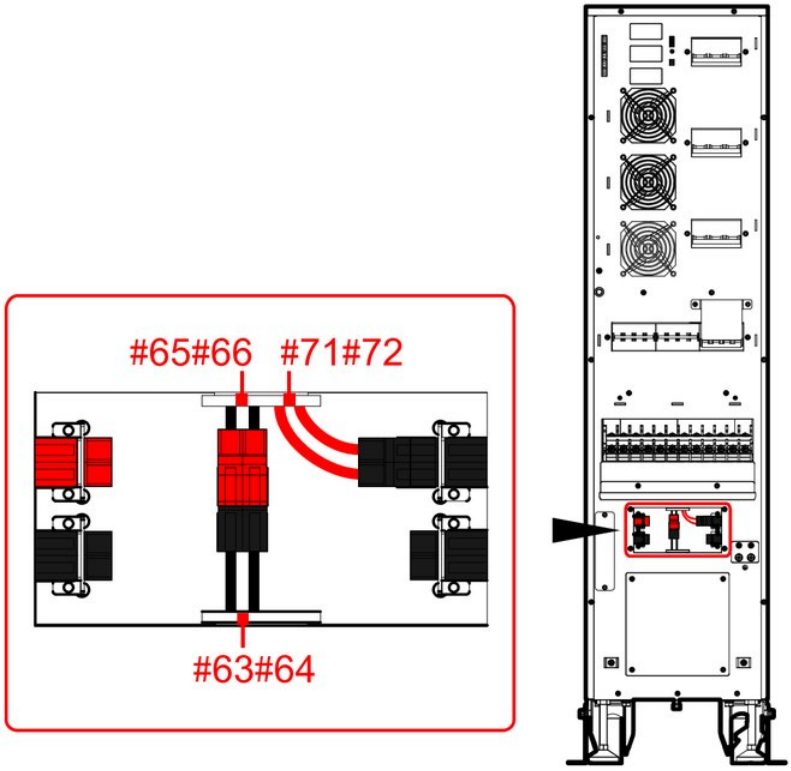


**FIGURE 3-18** Mode connector of default factory

- 33 mode

Wiring method 1: Different input sources for mains and bypass.

When the mains input and bypass input come from different sources, they are connected separately. The mode connector stays in its factory position (as shown in Figure 3-18). Connect the cables to the terminals according to the terminal markings. The 33-mode wiring diagram is shown in Figure 3-19.

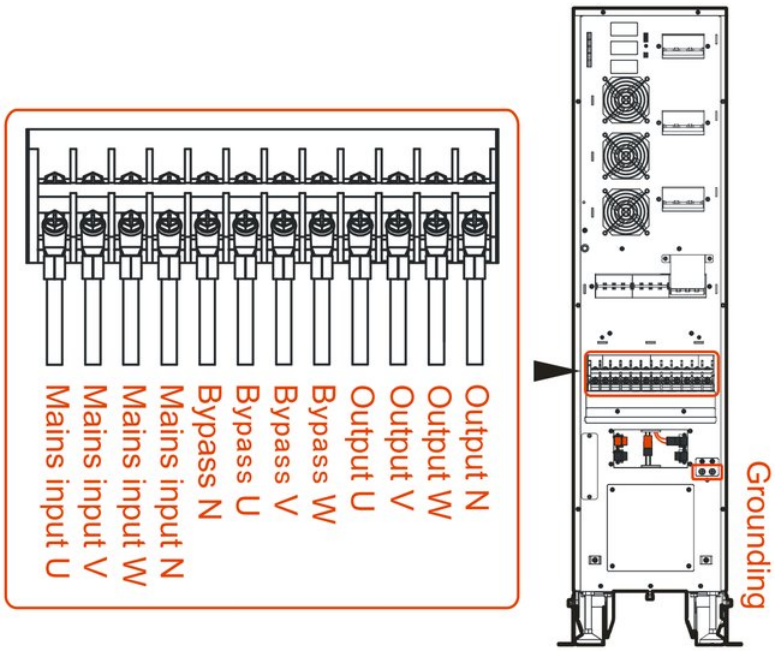


**FIGURE 3-19** Wiring diagram 1 of 33 mode

Wiring method 2: Common input source for mains and bypass.

When the mains input and bypass input come from the same source, the bypass input is linked to the mains input with the short-circuit wires. The mode connector stays in its factory position (as shown in Figure 3-18). Connect the cables to the terminals according to the terminal markings. The 33-mode wiring diagram is shown in Figure 3-20.

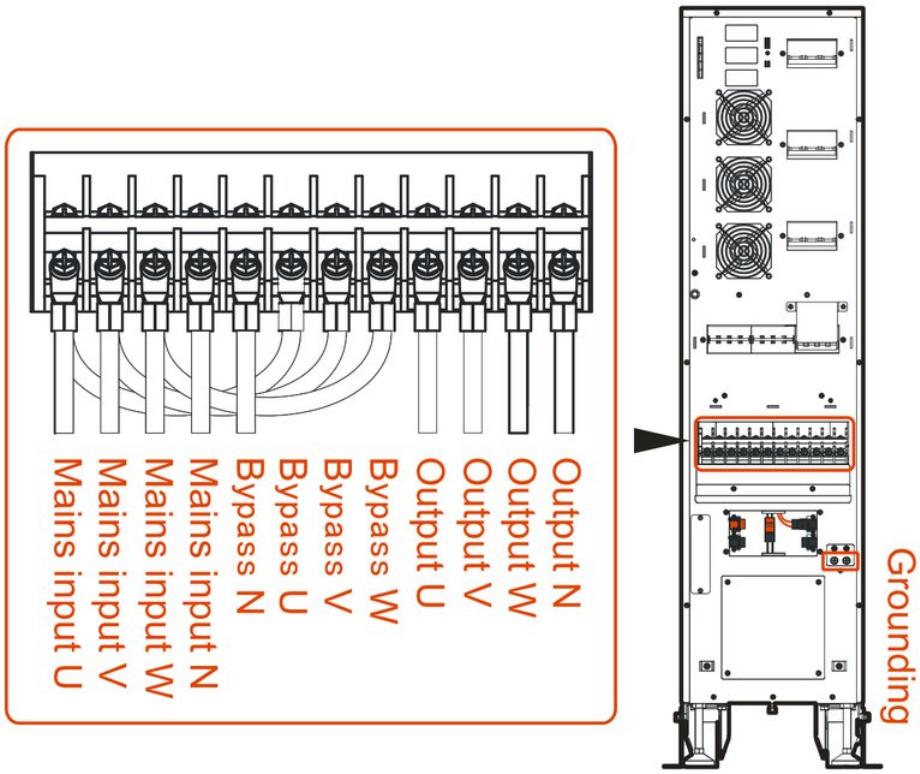


**FIGURE 3-20** Wiring diagram 2 of 33 mode

- Changing from 33 mode to 31 mode

To change from 33 mode to 31 mode, first pull out the mode connector from its factory position (as shown in Figure 3-18), then insert it into the 31-mode port (as shown in Figure 3-21). Take three 3# connector jumpers and one 4# connector jumper (optional accessories) and fit them to the UPS wiring terminals (as shown in Figure 3-22).

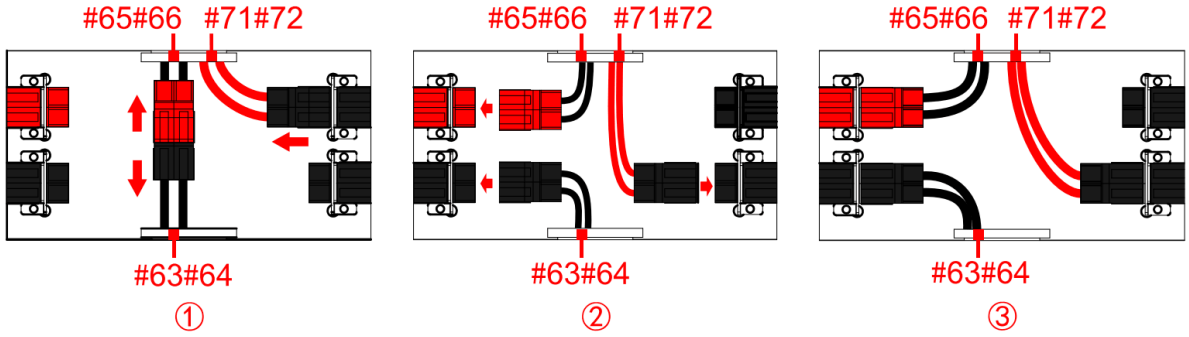


**FIGURE 3-21** Mode connector diagram of 31 mode

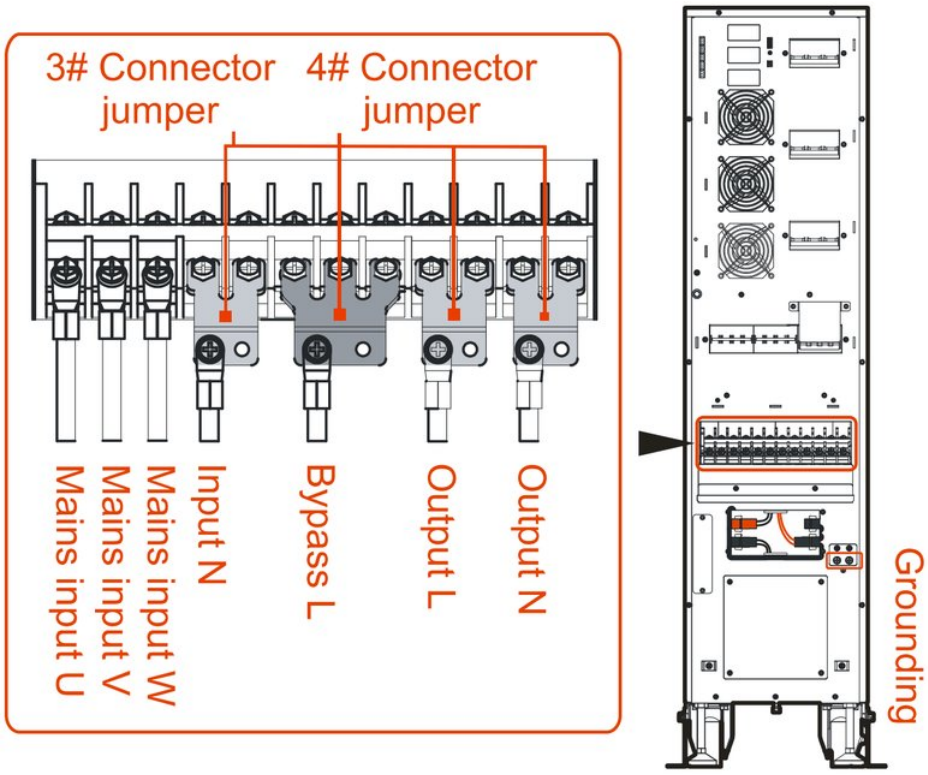


**FIGURE 3-22** Connector jumper and wiring terminal diagram of 31 mode

**CAUTION**

1. To change the mode of a 30K-40K series UPS: 1) switch off the UPS completely; 2) rewire and reposition the mode connector strictly as shown in the steps above; 3) connect only the mains, keeping the bypass breaker open; 4) set the work configuration on the screen to match the actual wiring; 5) check again that the wiring and mode connector match the screen configuration, then start the UPS; 6) close the bypass breaker once the inverter output is normal.
2. For the corresponding screen settings, see 4.5.7 Device Configuration Page.
3. For example: to set a 40 kVA UPS to 31 mode, wire it and fit the mode connector according to the 31-mode diagrams, and set the work configuration on the screen to 31.

**NOTE**

1. In 31 mode with separate sources for input and bypass, connect the neutral (N) to the input N terminal. 2. After wiring, check that all cables are connected correctly and none is missing.

**CAUTION**

1. On the 30kVA (S)/40kVA (S) the external battery port is live (internal batteries): take care when wiring. Do not remove its cover unless you are connecting an external battery.
2. Wire the UPS strictly as shown in the figures to avoid short circuits.
3. Before refitting the wiring cover plate, make sure that all cables are connected to the terminals properly and securely.

3 Refit the mode connector cover plate first, then the wiring cover plate.

4 Divide the cables into two bundles and fix them to the bottom of the device with cable ties.

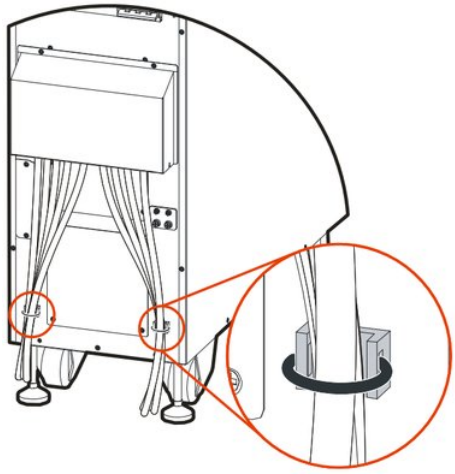

**FIGURE 3-23** Wires fixation

> **NOTE**
> 1. The 30kVA (T)/40kVA (T) has a fan on the rear panel: do not block the air vents when fixing the cables. 2. After wiring, check that all cables are connected correctly and none is missing.

### 3.5.2 Wiring Between UPS and External Battery

> **NOTE**
> S models (internal battery) can also be connected to an external battery for longer back-up time. Standard models (no internal battery) must be connected to an external battery.

The battery input of the 10K-40K series UPS takes a split battery: a positive and a negative string with the neutral at the midpoint. Each string has 8 to 20 12 V blocks on the 10K UPS, and 12 to 20 12 V blocks on the 15K/20K/30K/40K UPS.

Figure 3-24 shows the wiring for the 10K/15K/20K UPS: one battery cabinet with 32 battery blocks (12 V) and one 3P breaker; the external wiring comprises BATT.+, BATT.- and BATT. N.

Figure 3-25 and Figure 3-26 show the wiring methods for the 30K/40K UPS.

- Wiring method 1: 32 battery blocks (12 V) connected separately to the two external battery ports; each battery cabinet has one 3P breaker; the external wiring comprises BATT.+, BATT.- and BATT. N, as shown in Figure 3-25.
- Wiring method 2: 32 battery blocks (12 V) connected to each external battery port; each battery cabinet has one 3P breaker; the external wiring comprises BATT.+, BATT.- and BATT. N, as shown in Figure 3-26.

### 10K/15K/20K UPS

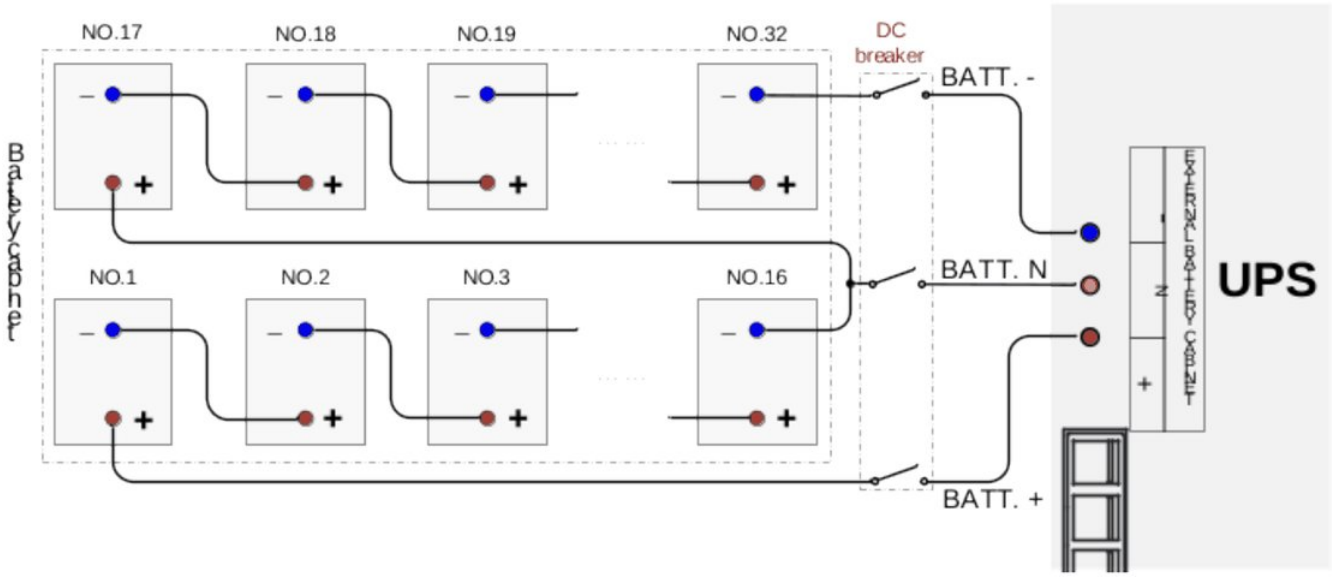


**FIGURE 3-24** Wiring diagram of 10K/15K/20K UPS

### 30K/40K UPS

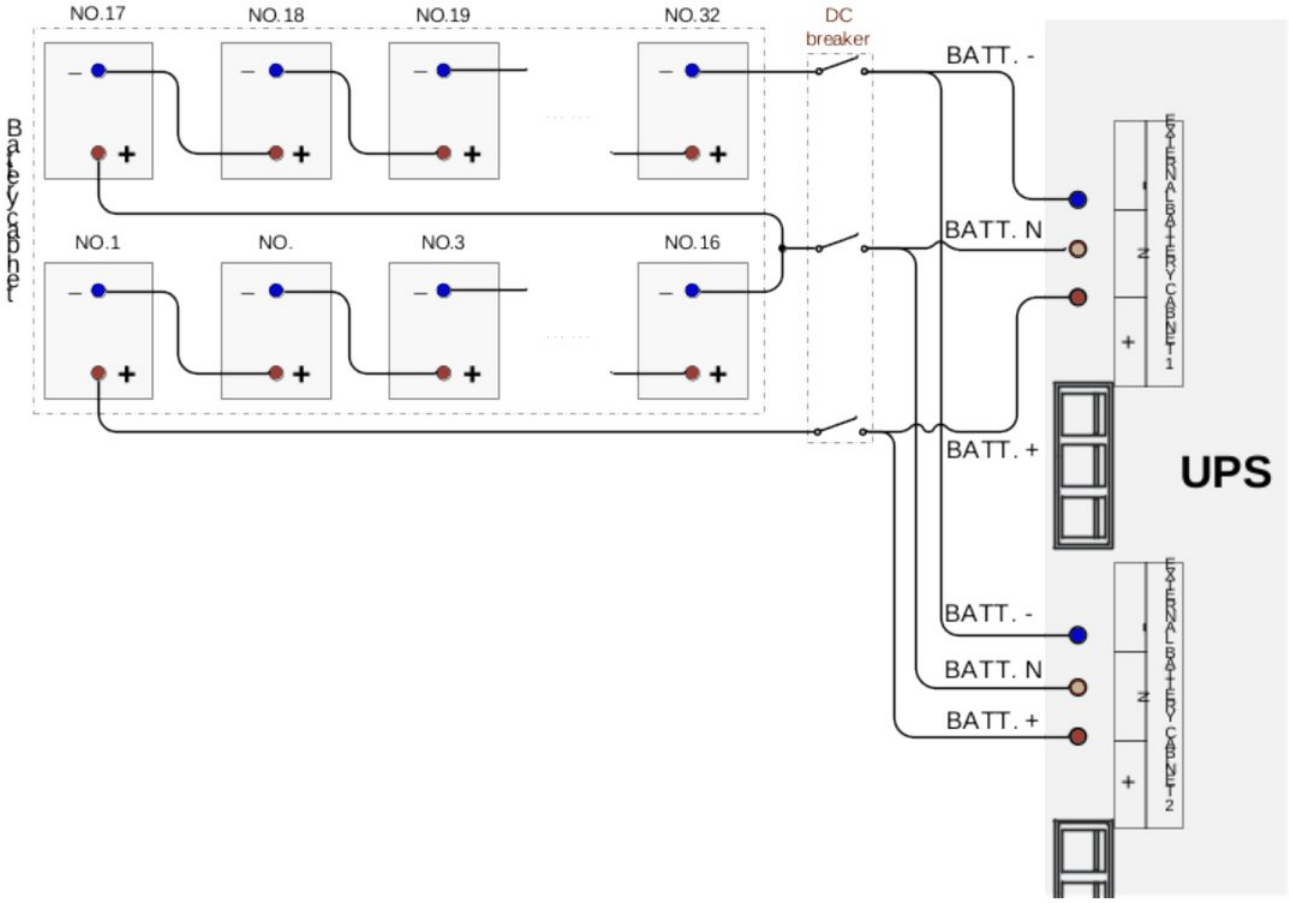


**FIGURE 3-25** Wiring diagram 1 of 30K/40K UPS

> **NOTE**
> When two UPS units share external battery cabinets, the battery parameters set on each UPS must be identical (brand, capacity, number of blocks and voltage).

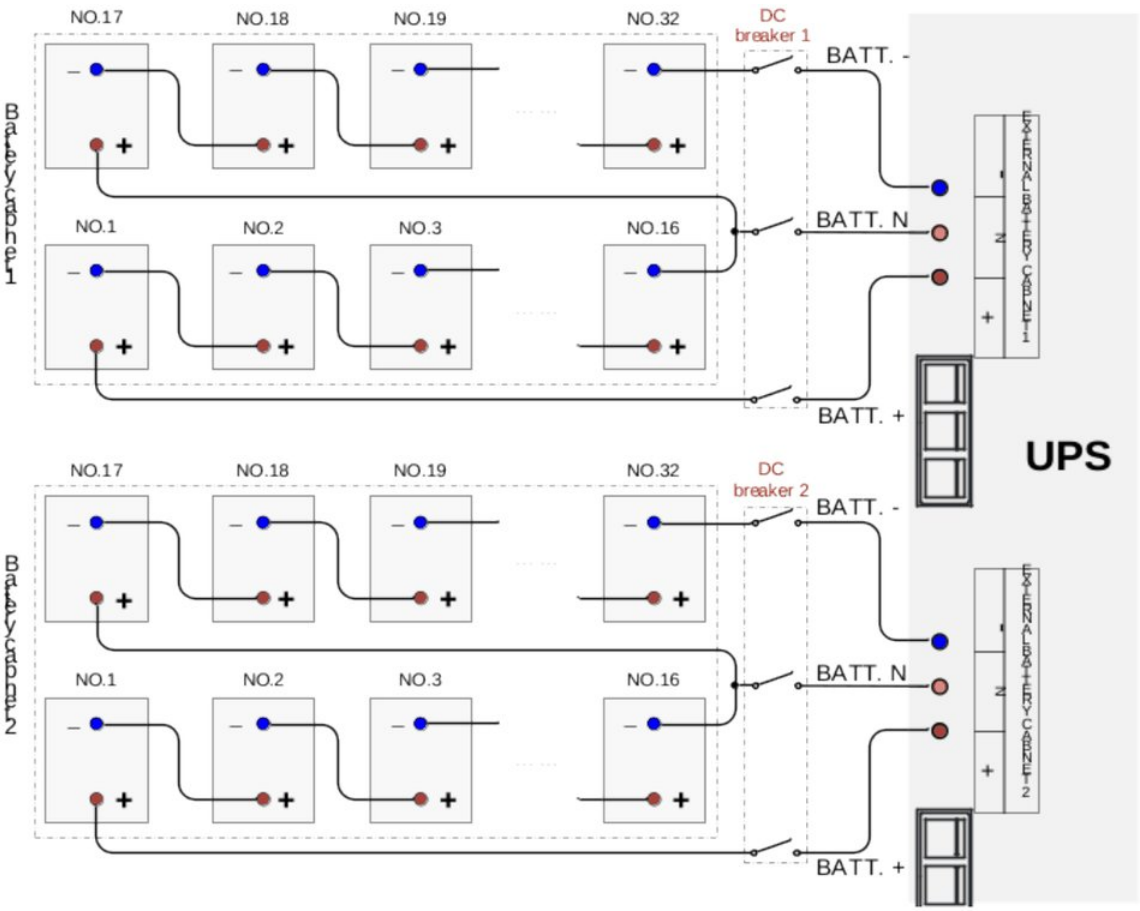


**FIGURE 3-26** Wiring diagram 2 of 30K/40K UPS

### EXTENSION BATTERY WIRING ASSEMBLY (OPTIONAL)

When an external battery is connected, the optional extension battery wiring assembly can be used; its installation is shown in Figure 3-27 or Figure 3-28.

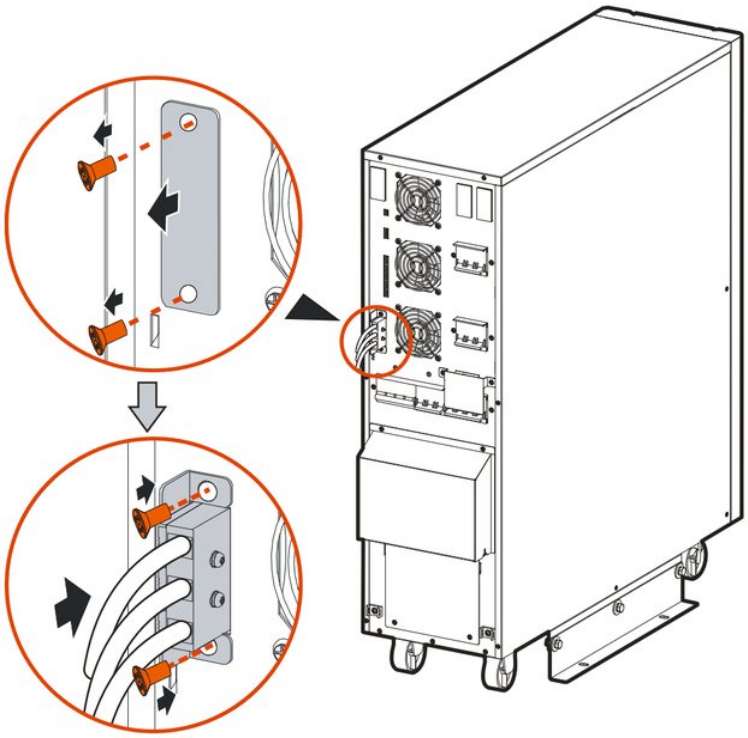

**FIGURE 3-27** Extension battery wiring assembly of 10K/15K/20K UPS

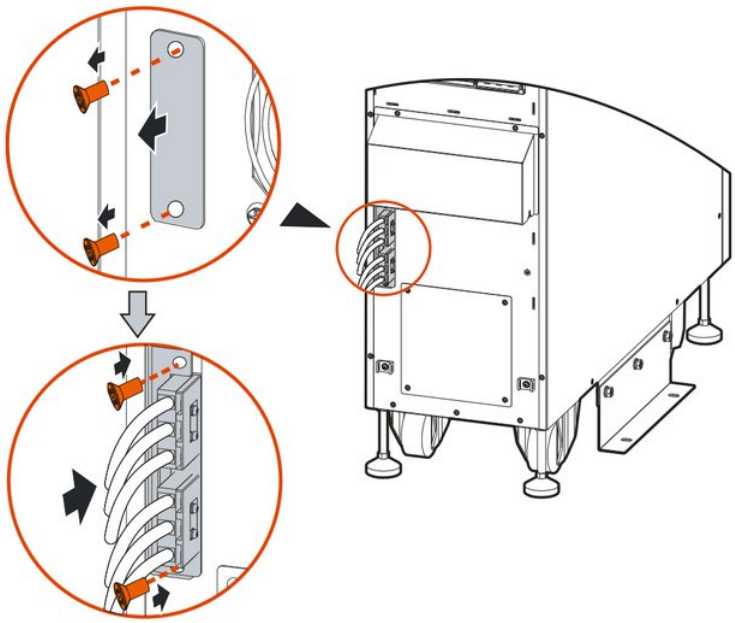

**FIGURE 3-28** Extension battery wiring assembly of 30K/40K UPS

> **NOTE**
> The extension battery wiring assembly is available with 1 m or 3 m cables, as required.

### 3.5.3 Wiring of Parallel System

> **NOTE**
> The standard UPS is a single unit: parallel operation requires the optional Parallel Kit-T(2m) NT-PA.

PROCEDURE

1. Install the batteries and each UPS of the parallel system according to 3.4 Mechanical Installation.
2. Connect the input, bypass, output and battery cables of the parallel system as shown in Figure 3-29 to Figure 3-33.

- 10K/15K/20K UPS

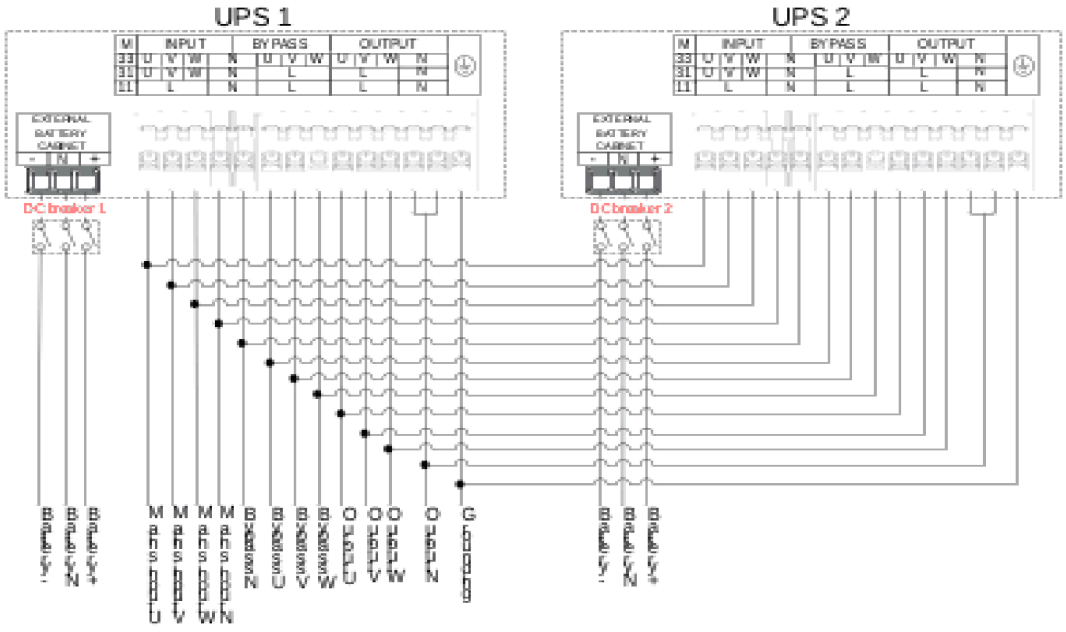


**FIGURE 3-29** 33 mode parallel system wiring diagram of 10K/15K/20K UPS

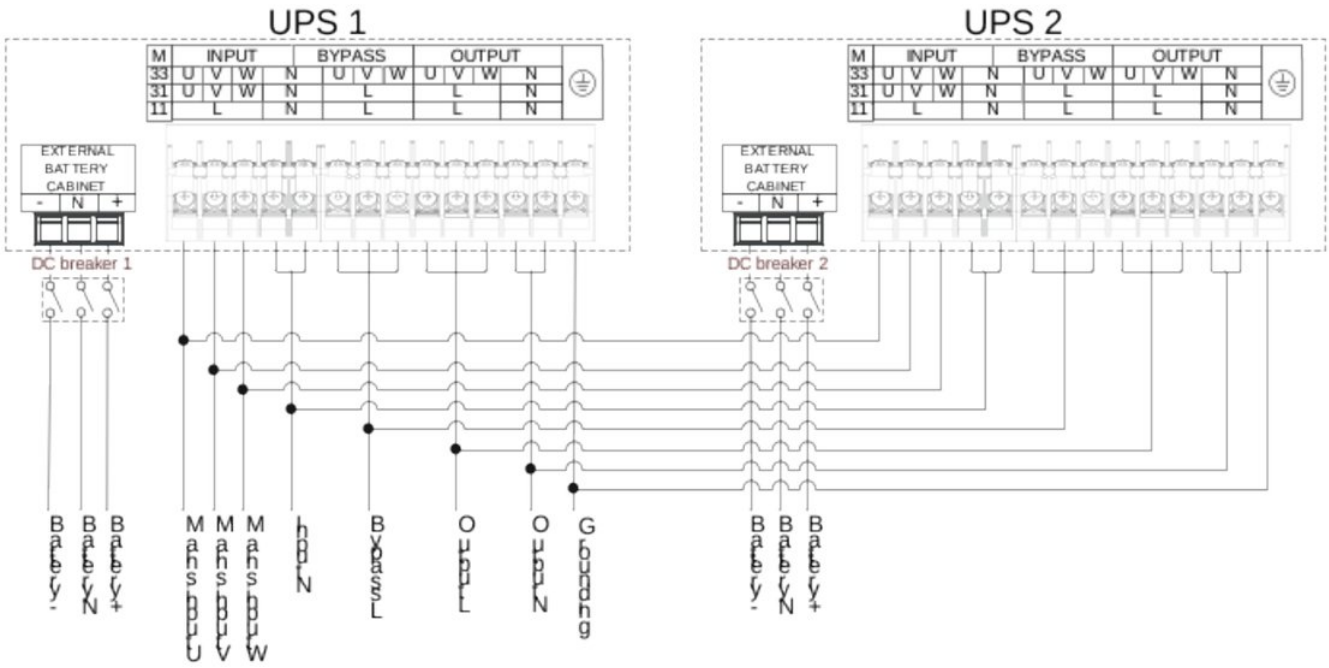


**FIGURE 3-30** 31 mode parallel system wiring diagram of 10K/15K/20K UPS

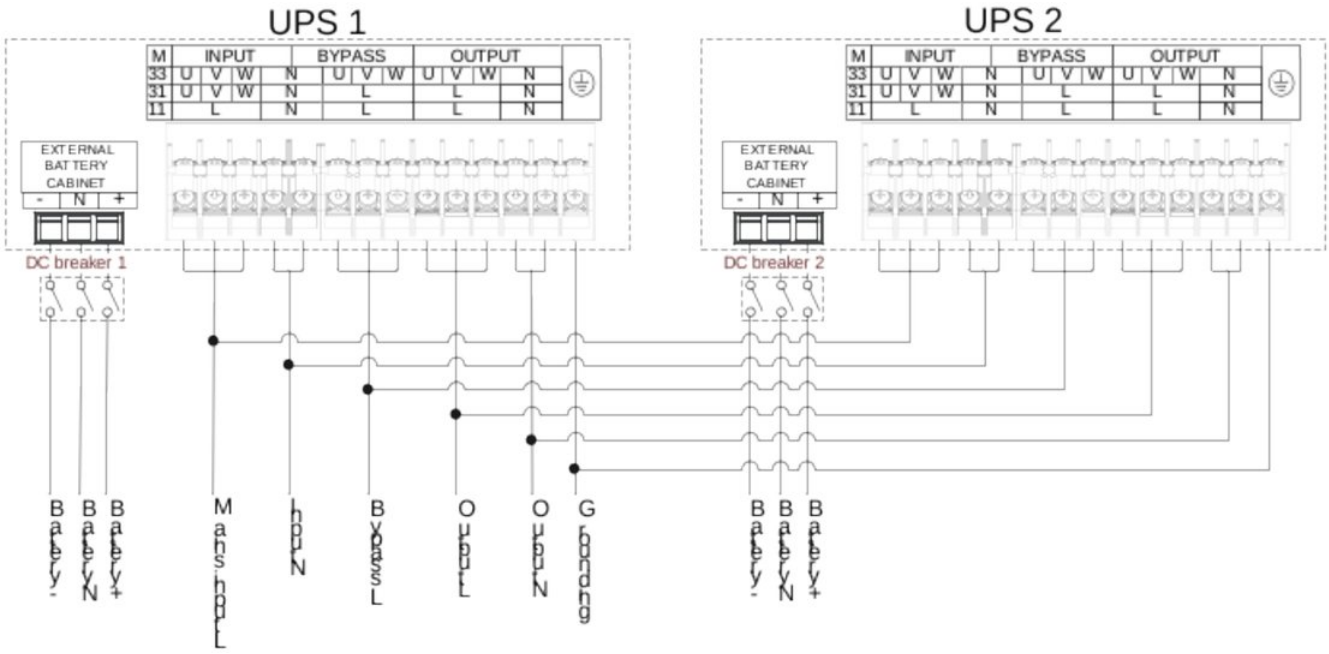


**FIGURE 3-31** 11 mode parallel system wiring diagram of 10K/15K/20K UPS

- 30 kVA / 40kVA

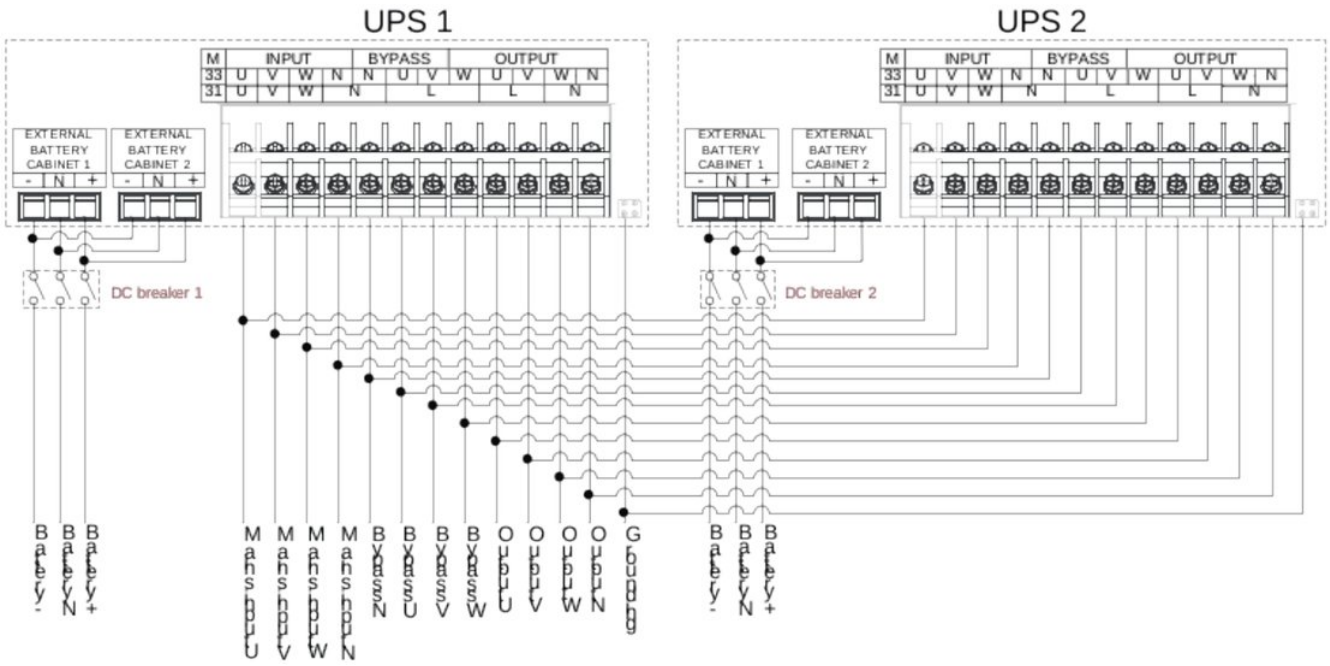


**FIGURE 3-32** 33 mode parallel system wiring diagram of 30K/40K UPS

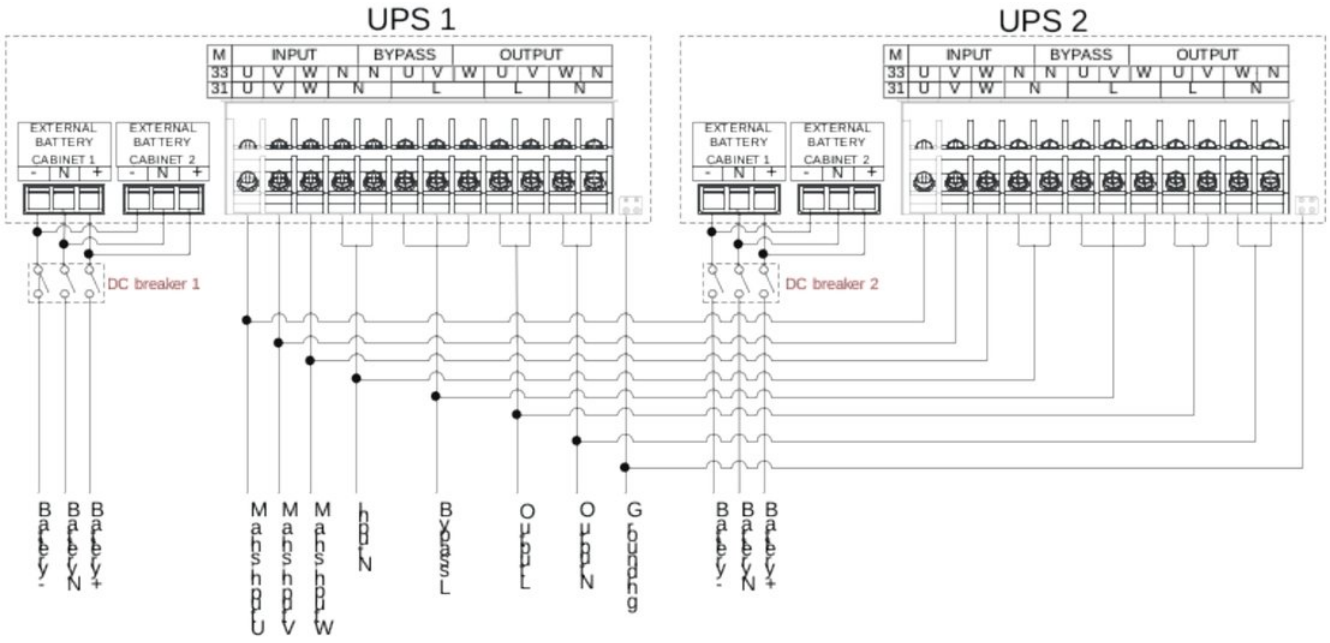


**FIGURE 3-33** 31 mode parallel system wiring diagram of 30K/40K UPS

3 Connect the parallel ports of all UPS units with the parallel cables, as shown in Figure 3-34 and Figure 3-35.

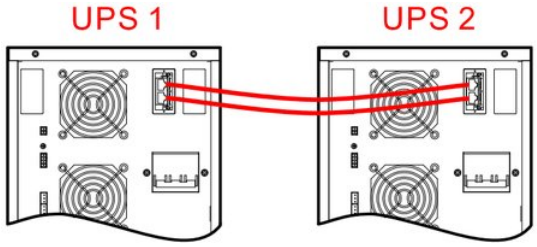


**FIGURE 3-34** Double parallel wiring diagram of 10kVA

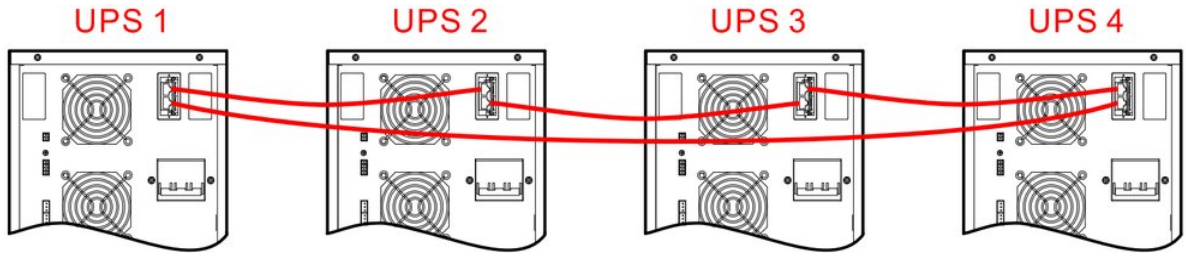


**FIGURE 3-35** Four parallel wiring diagram of 10kVA

**NOTE**

1. The parallel wiring is the same on all 10K-40K models, but the parallel port of the 30K/40K UPS is in a different position; the figures above show the 10 kVA model. 2. When the UPS units of a parallel system share a battery pack, the battery parameters set on each UPS (capacity, number of batteries, charging voltage and charging current) must be identical. 3. Connect the parallel ports of all units with the supplied parallel cables. The two RJ45 parallel ports are identical and back each other up to increase system reliability. The UPS raises an alarm if one of them is not connected.

**WARNING**

1. Ensure that the parallel card of each UPS is correctly installed in the parallel system (see the installation guide of parallel card for details).
2. The wiring and phase sequence of all UPS units in the parallel system must be strictly identical, so that the bypass supplies of the parallel system are in phase.
3. The UPS units of a parallel system can share battery strings, but the number of batteries set on each UPS must be the same.

4. Set each UPS to the corresponding parallel mode (see 4.5.7 Device Configuration Page).

CHAPTER 4

# 04 Touch Screen Operation

On the touch screen the user can view input, output, load and battery parameters, check the UPS status and alarms, and make the related settings. The event log can also be consulted for fault diagnosis.

IN THIS CHAPTER


4.1 Menu Hierarchy
4.2 Main Page
4.3 Login Page
4.4 Information Management Page
4.5 Setting Management Page
4.6 Current Fault Page
4.7 Buzzer Control
4.8 ON/OFF Operation


**NOTE**

The parameters values and other details in the pictures in this chapter are for illustration only. Detailed information should be based on the touch screen of the product.

**WARNING**

The touch screen contains parameters that affect the operation of the device. All settings and parameter changes must be made by designated qualified personnel. If the meaning of a parameter is unclear, refer to this manual or consult AEC service. Do not change parameters without authorisation.

## 4.1 Menu Hierarchy

The menu hierarchy of the touch screen is as shown in Figure 4-1.

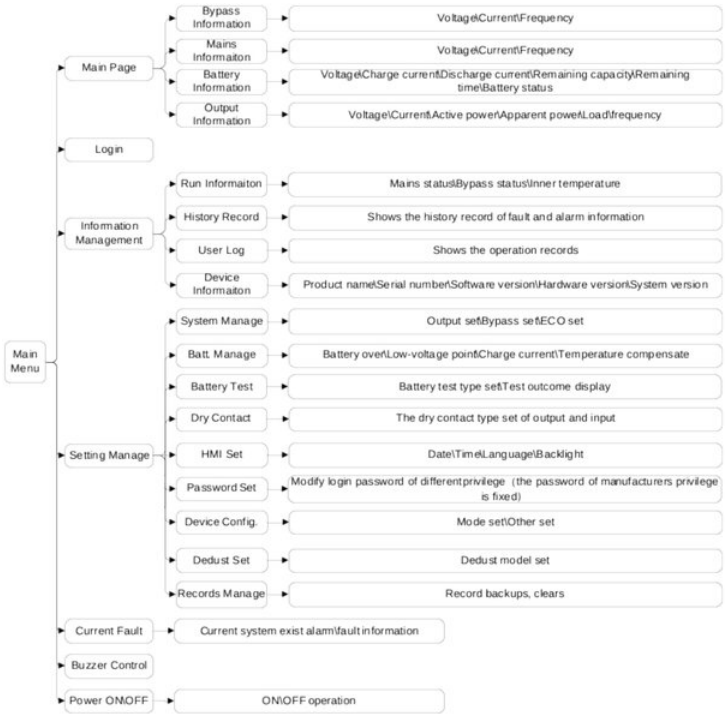


**FIGURE 4-1** Menu structure of the touch screen

# Keys and touch screen: quick guide

Starting and stopping use the two ON and two OFF keys of the front panel, pressed together; everything else is on the touch screen.

## QUICK GUIDE Start the UPS

Section 5.2

1. **Breakers** — Close the mains, bypass and battery breakers
2. **Screen on** — Wait for the touch screen to light up
3. **ON + ON** (1 s) — Press both ON keys together
4. **Loads** — After about 10 s, switch on the loads, largest first

## QUICK GUIDE Shut down the UPS

Section 5.3

1. **Loads off** — Switch off the loads; let the UPS run 10 min without load
2. **OFF + OFF** (1 s) — Press both OFF keys together
3. **Breakers** — Open the battery, bypass and mains breakers

## QUICK GUIDE Start from the battery (no mains)

1. **BATT. Start** (7 s) — Press and hold the battery start key
2. **ON + ON** — Press both ON keys together until a beep

## QUICK GUIDE Log in and change a setting

Section 4.3 / 4.5

1. **Login** — Main page: tap the login icon
2. **Password** — Enter the password; only then can settings be changed
3. **Settings** — Tap the setting icon and open the page
4. **Save** — Change the value and tap Save: a check mark confirms it

## QUICK GUIDE Mute the buzzer

Section 4.7

1. **Buzzer** — Tap the buzzer icon to mute or unmute

> A continuous (long) beep cannot be muted.

## 4.2 Main Page

After power-on the touch screen initialises and then shows the system monitoring main page, as shown in Figure 4-2.

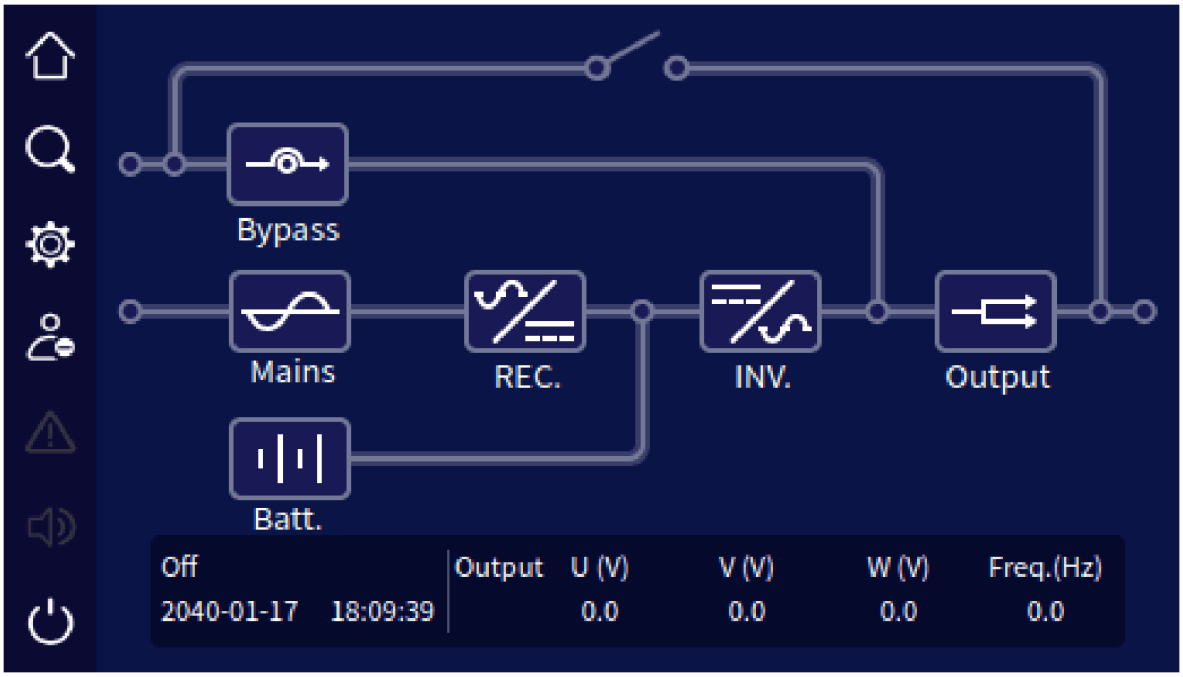


FIGURE 4-2 Main page

### 4.2.1 Icon Meaning

The main page shows the UPS topology. The icons mean:

: Homepage. Click this icon on any page to return to the main page.

: Information management. Click this icon to open the information management page.

: Setting management. Click this icon to open the setting management page.

: Current fault information. If there is a fault, click this icon to view the fault information.

: Buzzer. Click the icon to control the buzzer.

: Login.

: ON/OFF.

: Bypass information. When bypass is abnormal, the icon lights up in red.

: Mains information. When mains is abnormal, the icon lights up in red.

: Battery information. When battery is abnormal, the icon lights up in red.

: Output information. When output is abnormal, the icon lights up in red.

### 4.2.2 Working Status

There are six main working statuses: without energy transmission status, mains inverting status, battery inverting status, bypass output status, ECO output and maintenance bypass output status. The corresponding animated power-flow lines on the main page are shown in Figure 4-3 to Figure 4-8. Other statuses are also shown by the corresponding indicators.

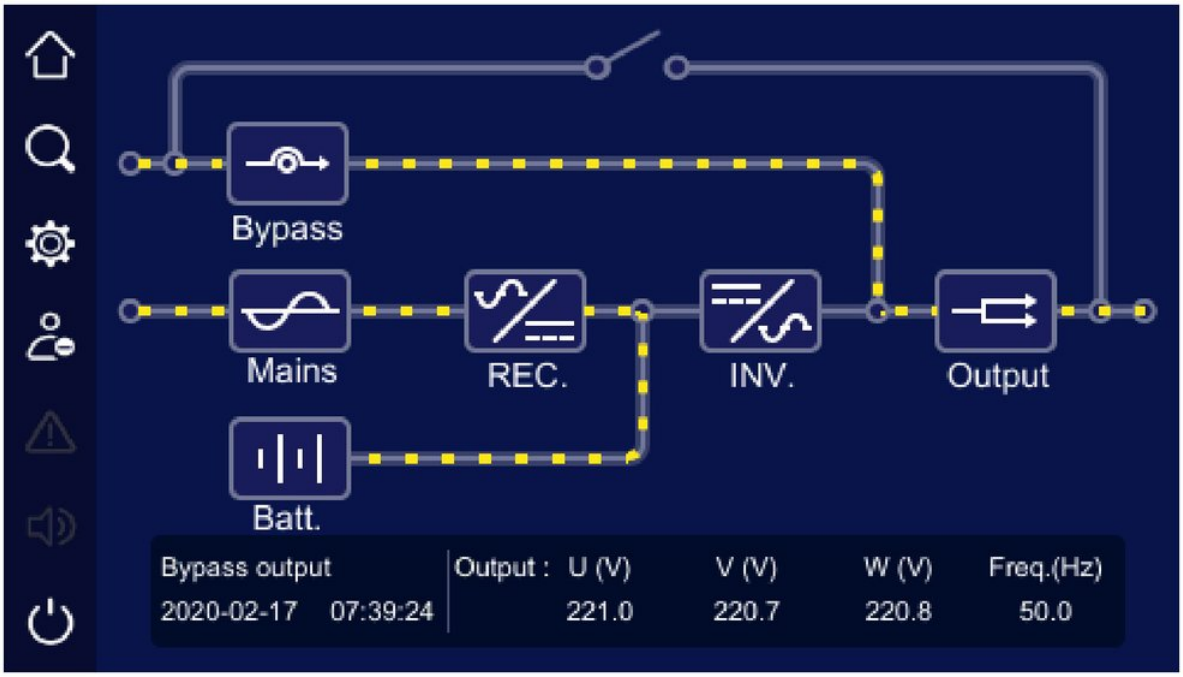


FIGURE 4-3 Without energy transmission status

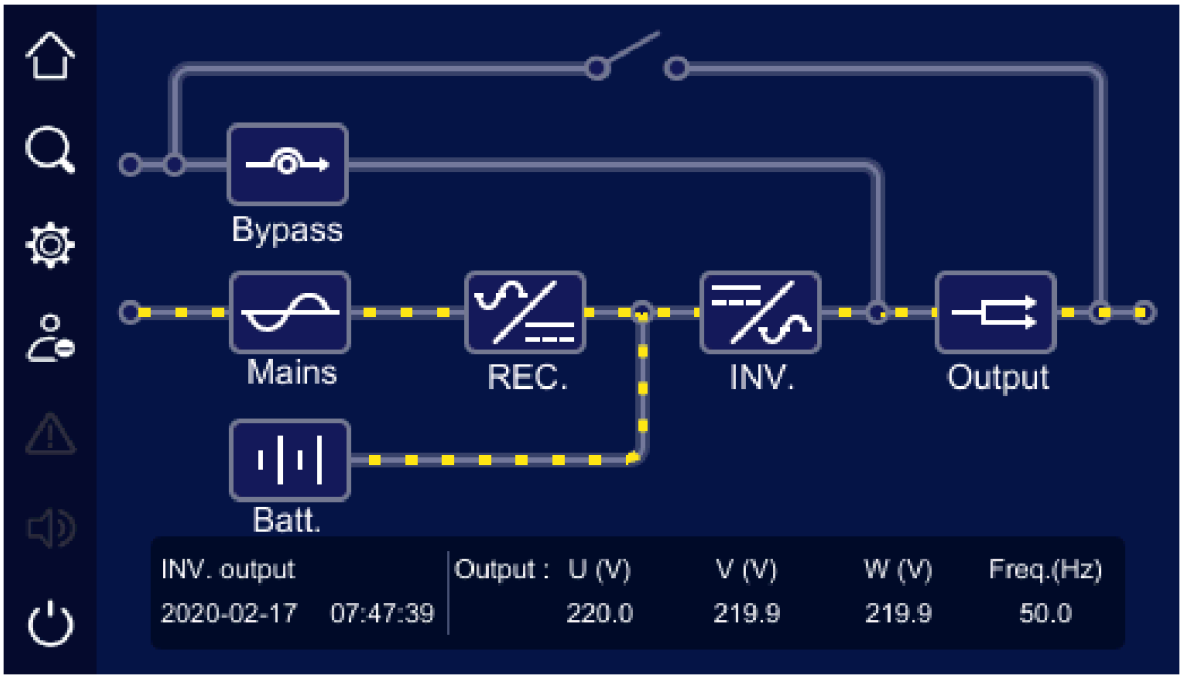


FIGURE 4-4 Mains normal, mains inverting status

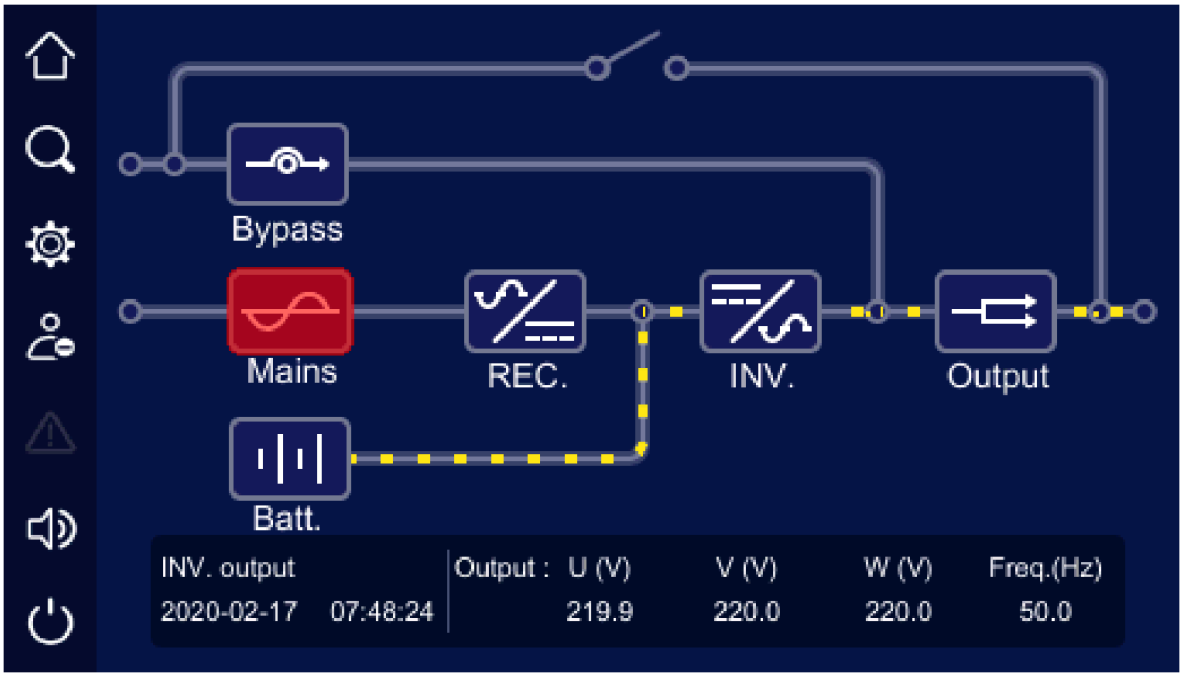


**FIGURE 4-5** Mains abnormal, battery inverting status

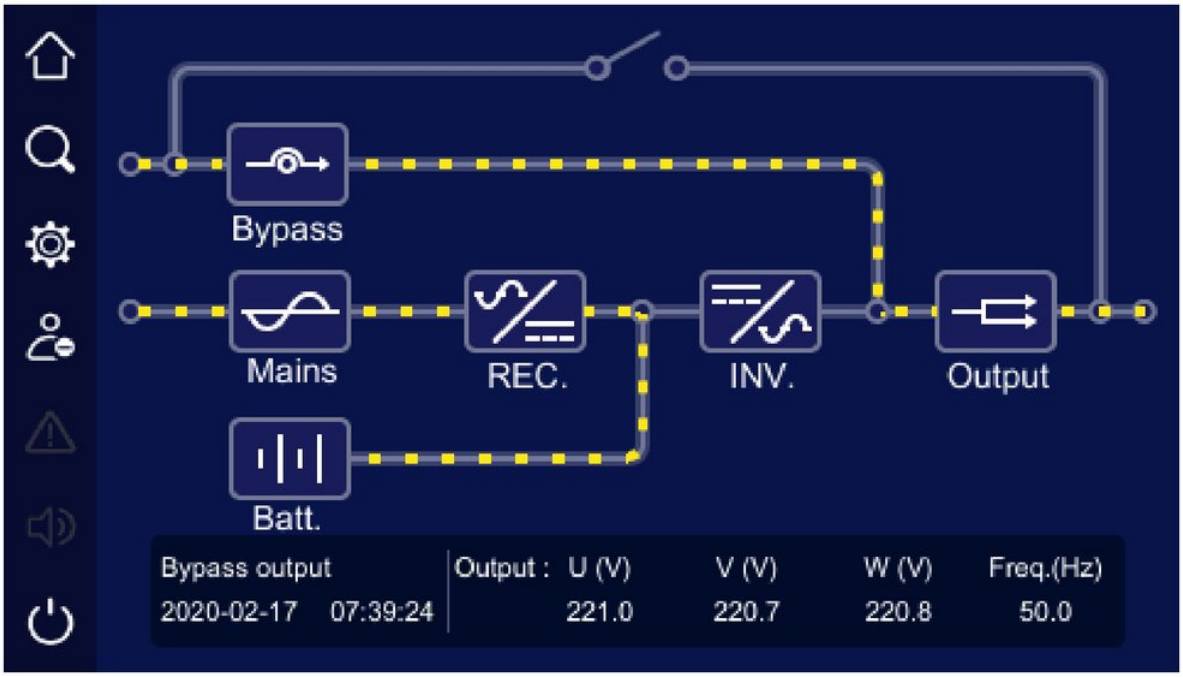


**FIGURE 4-6** Bypass output status

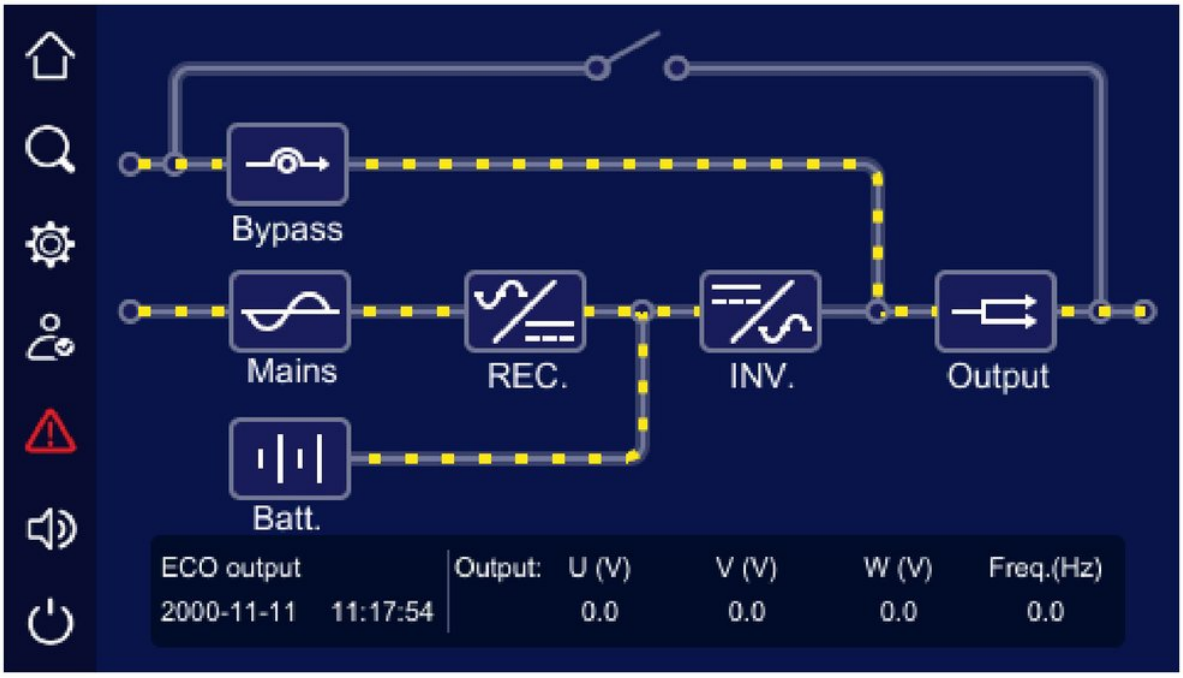


**FIGURE 4-7** ECO status

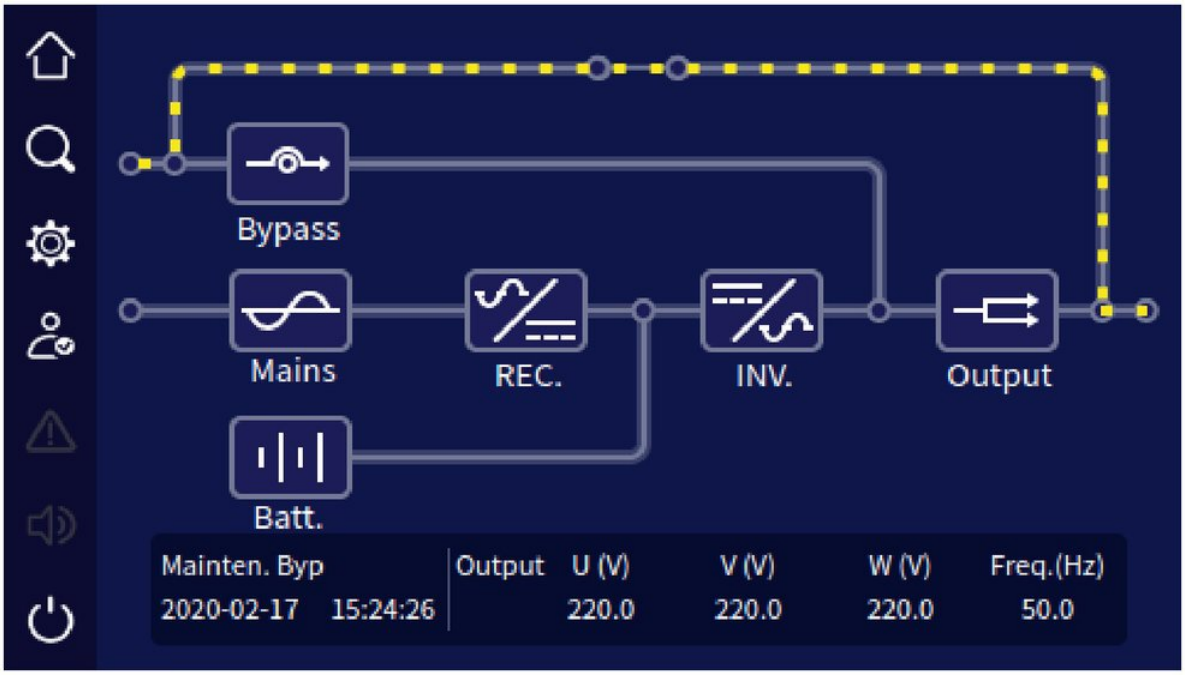


**FIGURE 4-8** Maintenance bypass output status

### 4.2.3 Bypass Information Page

On the main page, click the  icon to open the bypass information page, as shown in Figure 4-9.

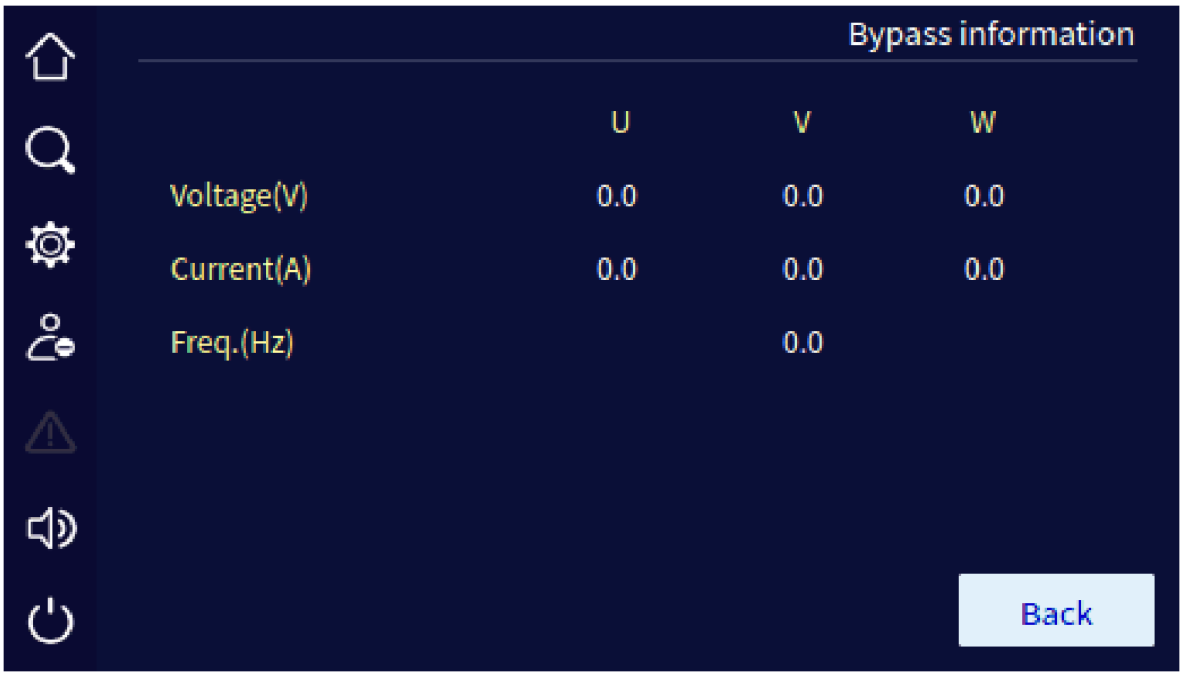


FIGURE 4-9 Bypass information page

### 4.2.4 Mains Information Page

On the main page, click the  icon to open the mains information page, as shown in Figure 4-10.

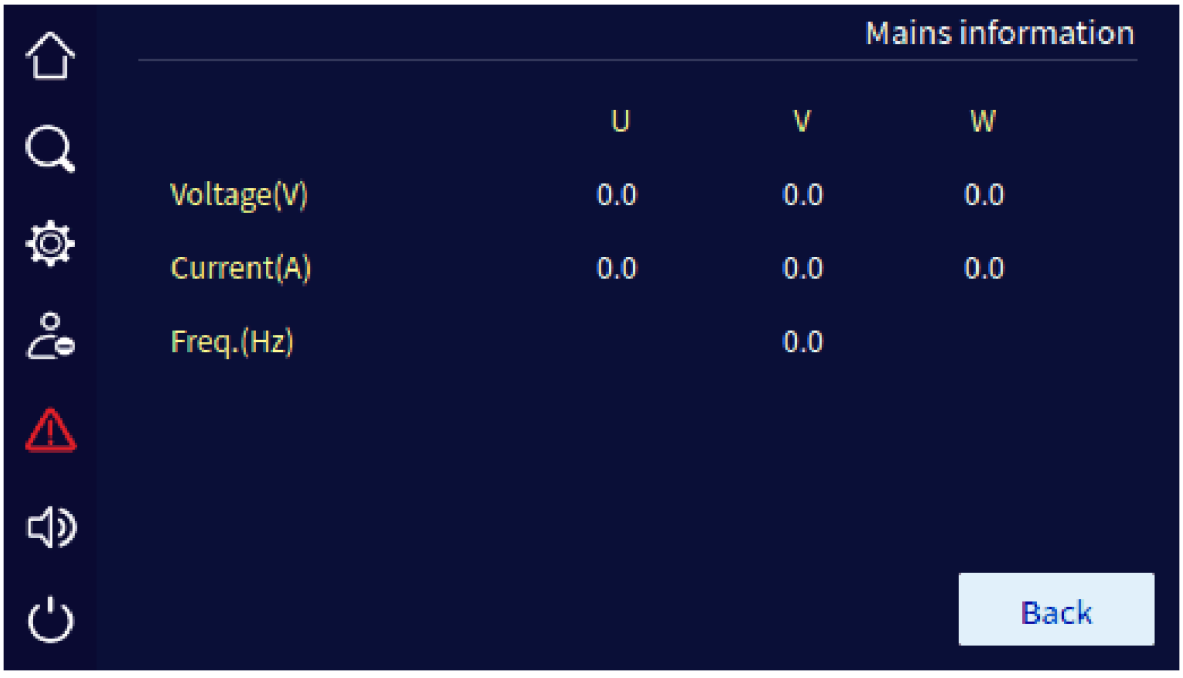


FIGURE 4-10 Mains information page

### 4.2.5 Battery Information Page

On the main page, click the icon to open the battery information page. During discharge it shows the discharge current; during equalizing or float charging it shows the charge current. The battery status shows the current battery status: discharge, equalized charge, floating charge. The page also shows the remaining battery capacity and remaining time, etc. as shown in Figure 4-11.

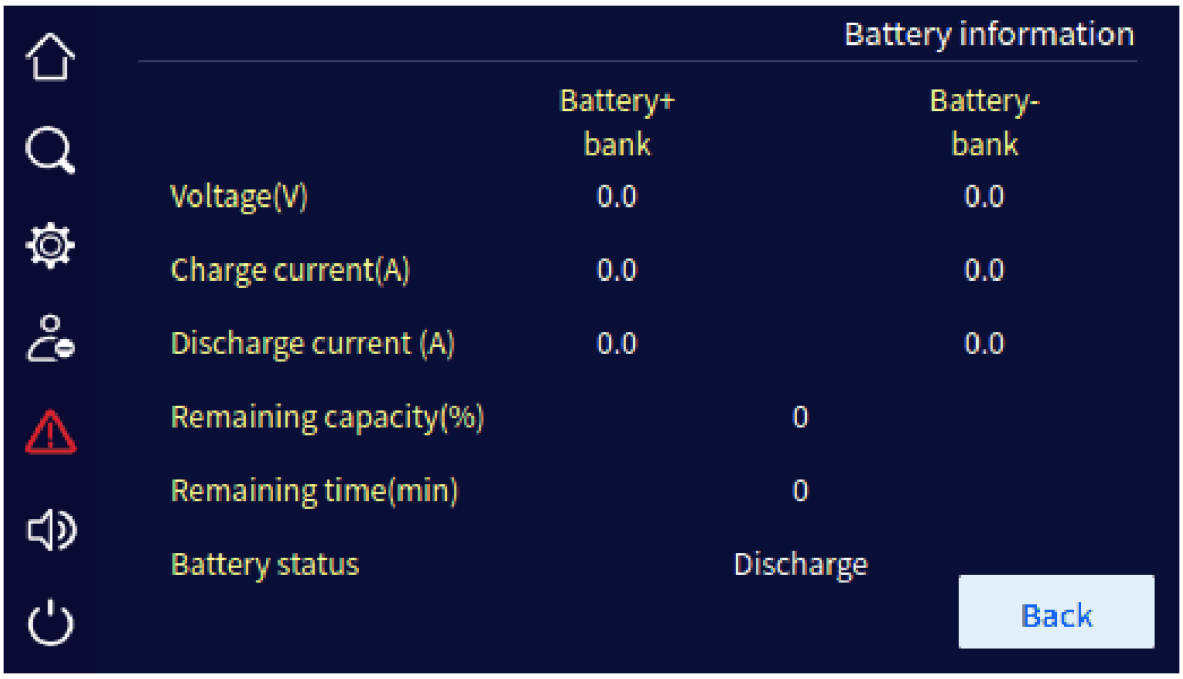


FIGURE 4-11 Battery information page

### 4.2.6 Output Information Page

On the main page, click the icon to open the output information page. The page shows the output voltage, current, load, active power, apparent power, power factor, output frequency, etc. as shown in Figure 4-12.

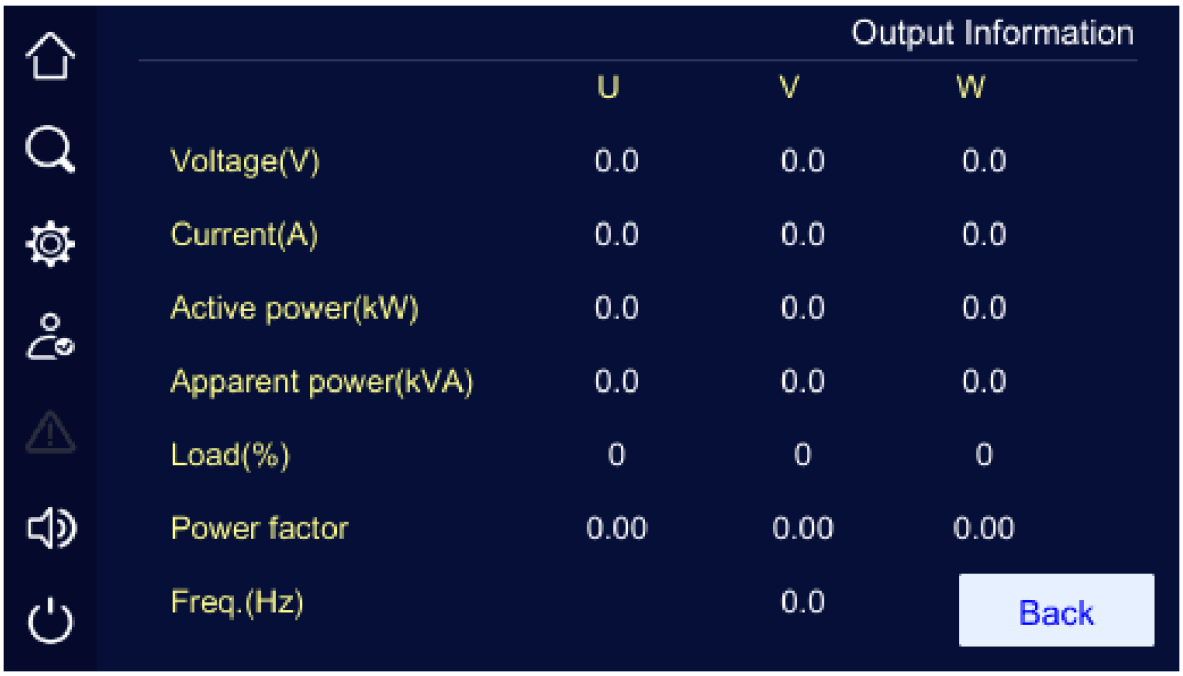


FIGURE 4-12 Output information page

## 4.3 Login Page

On the main page, click the icon to open the login page, as shown in Figure 4-13. Settings can be changed only after login.

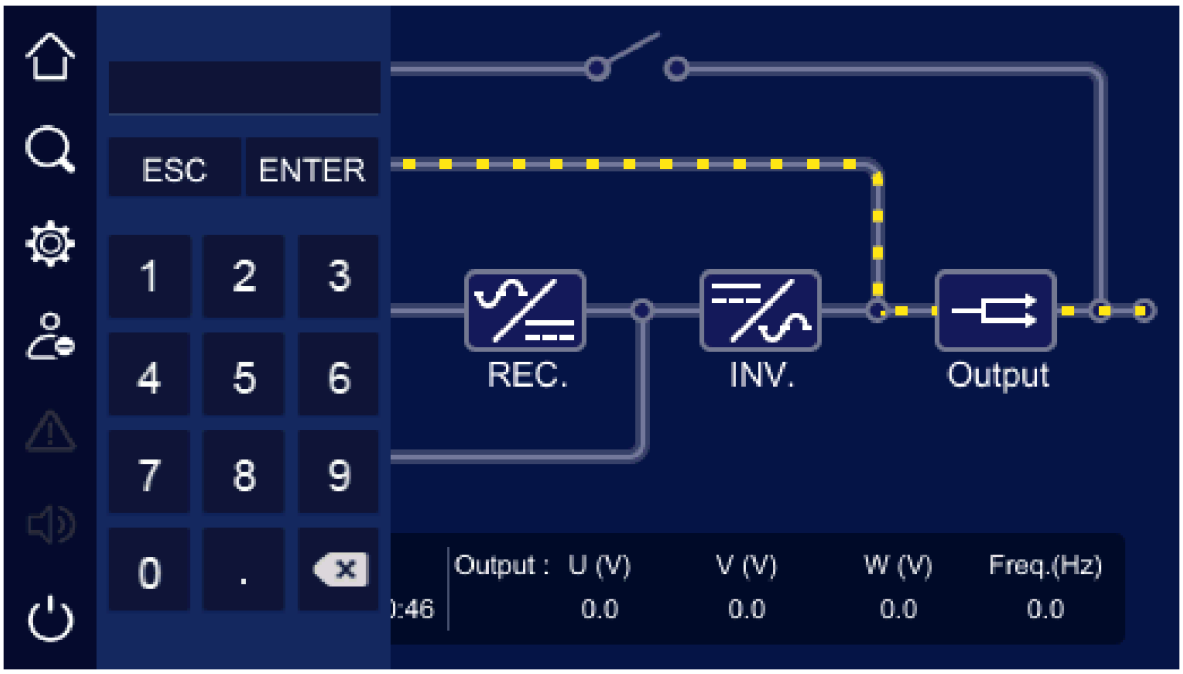


FIGURE 4-13 Login page

> **NOTE**
> The password for common user is 111; the administrator password is provided by AEC technical service. Common user can check the parameters only, administrator can check and set the UPS parameters.

## 4.4 Information Management Page

On the main page, click the icon to open the information management page, as shown in Figure 4-14. The page includes run info, history record, user log and device information (icon "device config.").

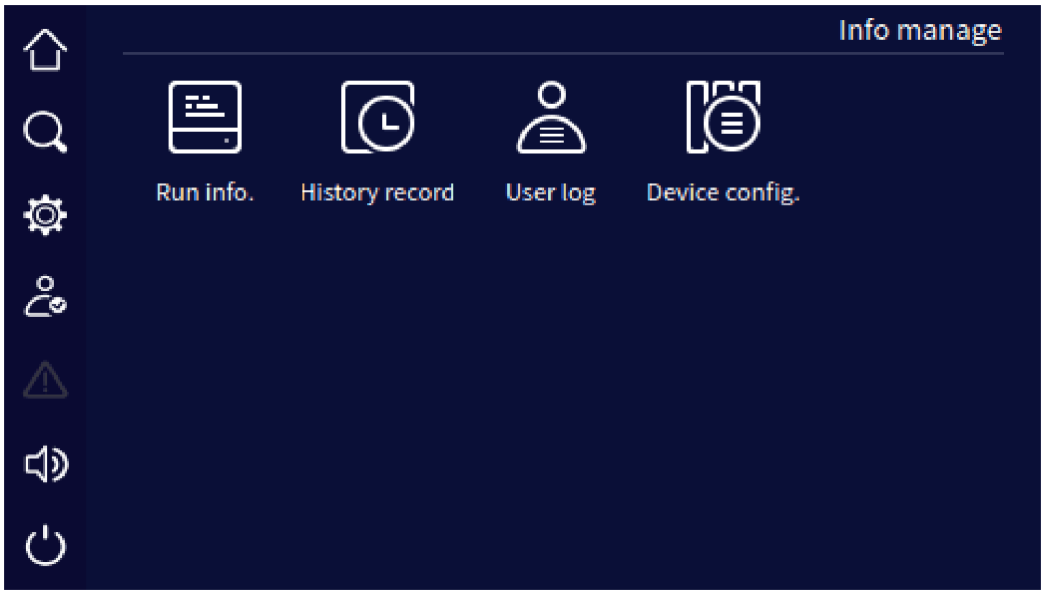


FIGURE 4-14 Information management page

### 4.4.1 Run Information Page

On the information management page, click the "run info." icon to open the run information page, as shown in Figure 4-15 to Figure 4-18. The page shows the UPS current status, including mains status, bypass status, battery status, output status, load status, rectifier status, inverter status, work mode, input loop, bypass loop, battery loop, fan status, inner temperature.

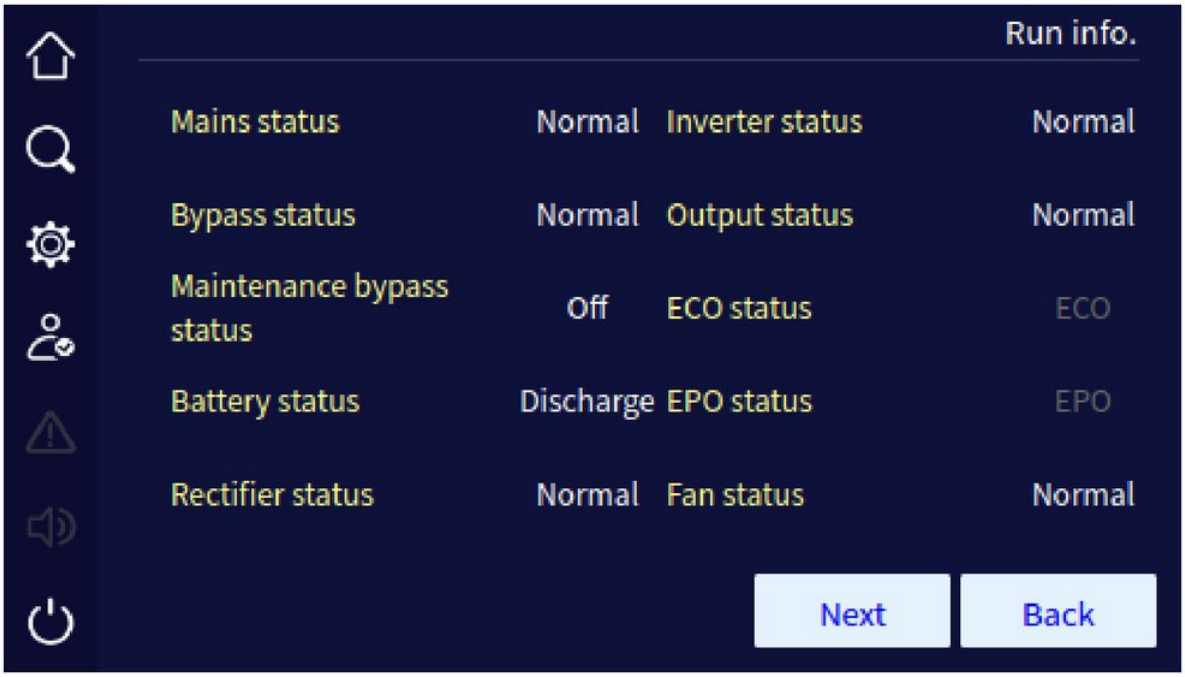


**FIGURE 4-15** Run info page 1 (single UPS)

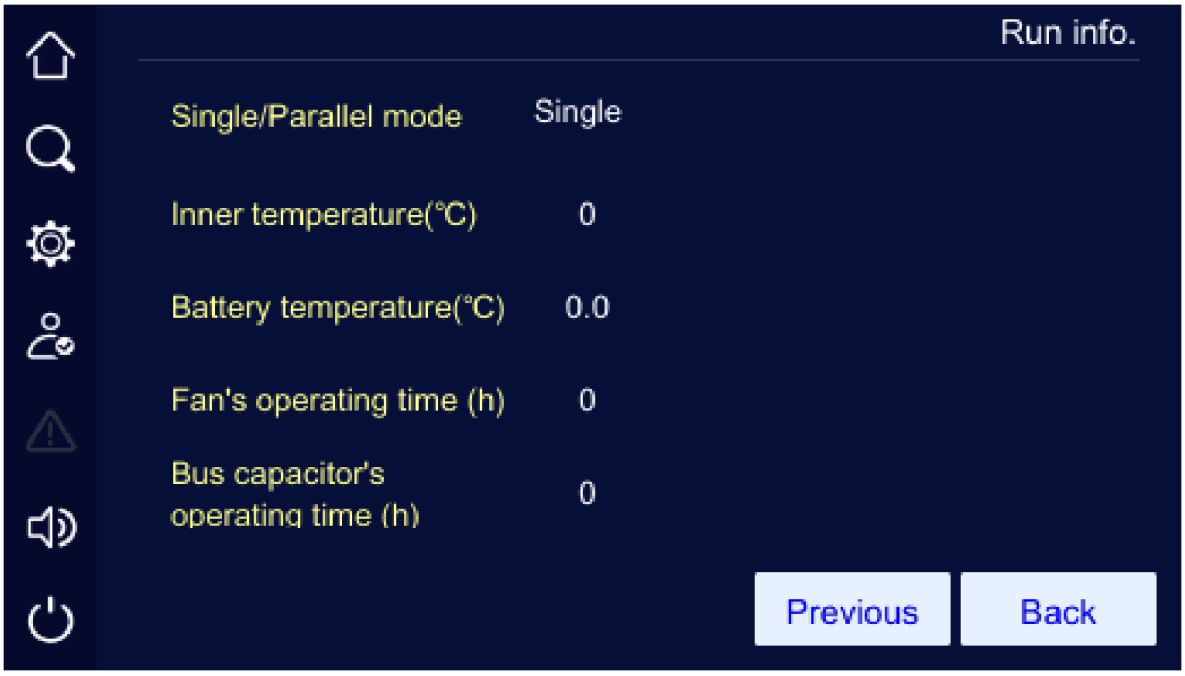


**FIGURE 4-16** Working status page 2 (single UPS)

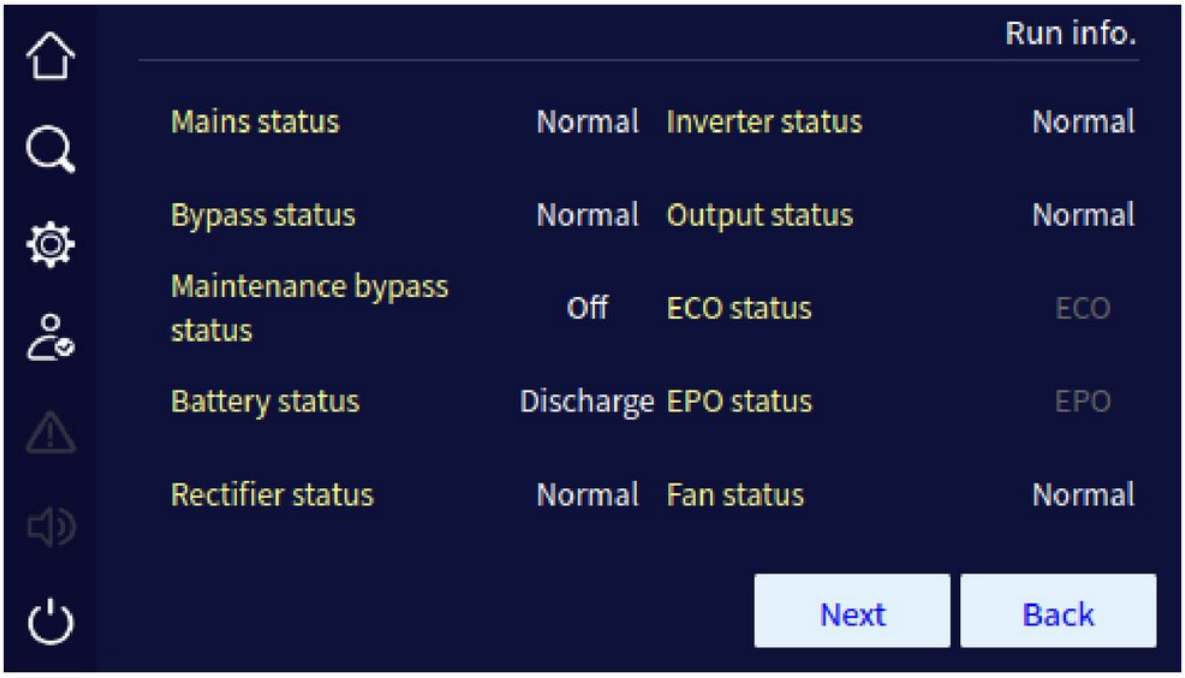


**FIGURE 4-17** Working status page 1 (parallel UPS)

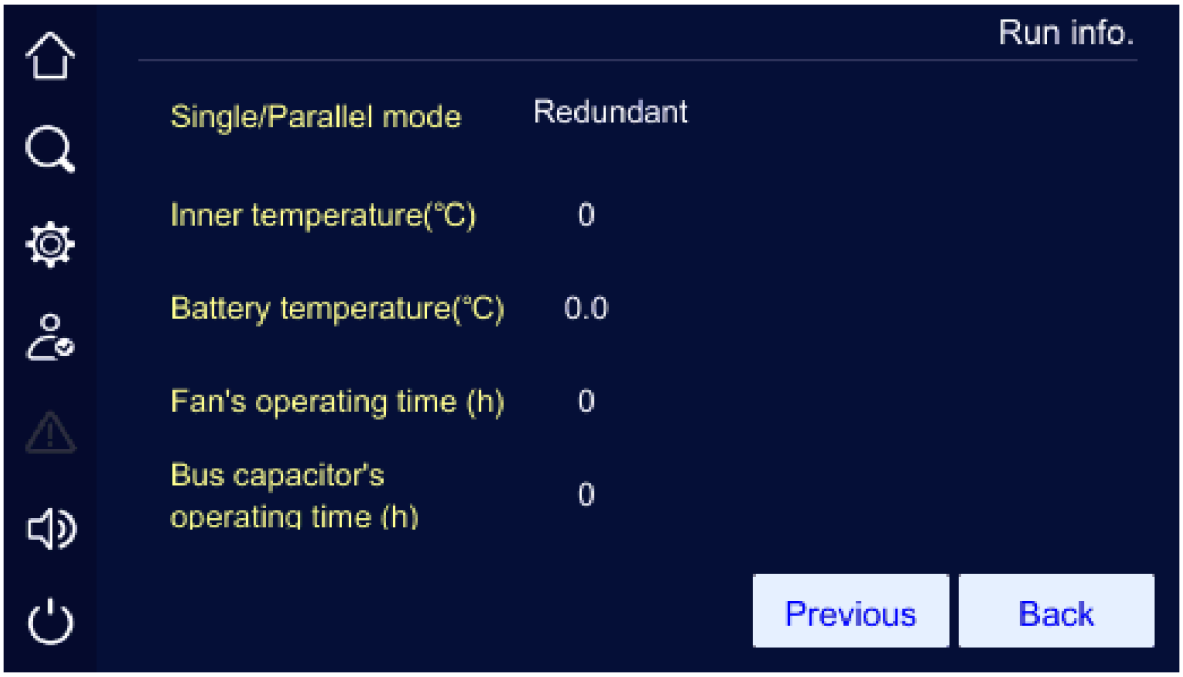


**FIGURE 4-18** Working status page 2 (parallel UPS)

### 4.4.2 History Record Page

On the information management page, click the "history record" icon to open the history record page, as shown in Figure 4-19. The page shows the fault and alarm information, and they are listed on the basis of time. The first record is the latest fault.

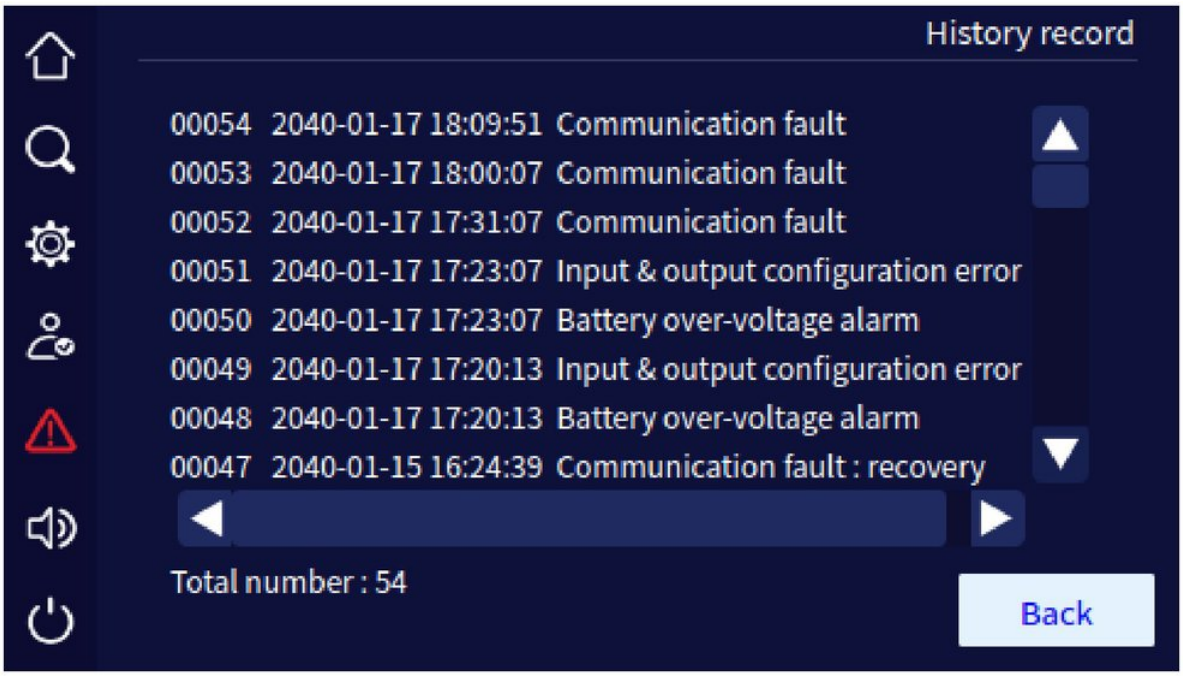


FIGURE 4-19 Event log page

### 4.4.3 User Log Page

On the information management page, click the "user log" icon to open the user log page, as shown in Figure 4-20. The page shows the operation records, such as ON/OFF operation, mains voltage range setting, bypass voltage setting, etc. The user log is listed on the basis of time. The first record is the latest operation record.

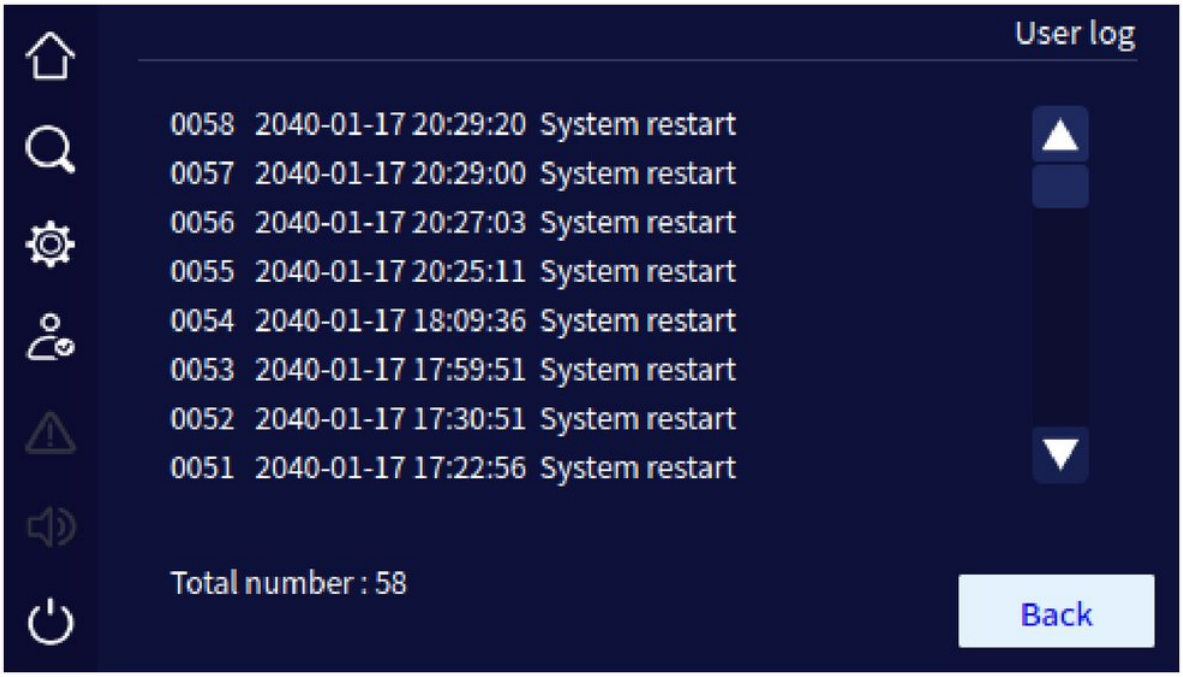


FIGURE 4-20 User log page

### 4.4.4 Device Information Page

In the information management page, click the "device config." icon to enter the device information page, as shown in Figure 4-21 and Figure 4-22. Device information page includes product name and model, version information includes serial number, rectifier version, inverter version, system version, protocol version and HMI software version, etc.

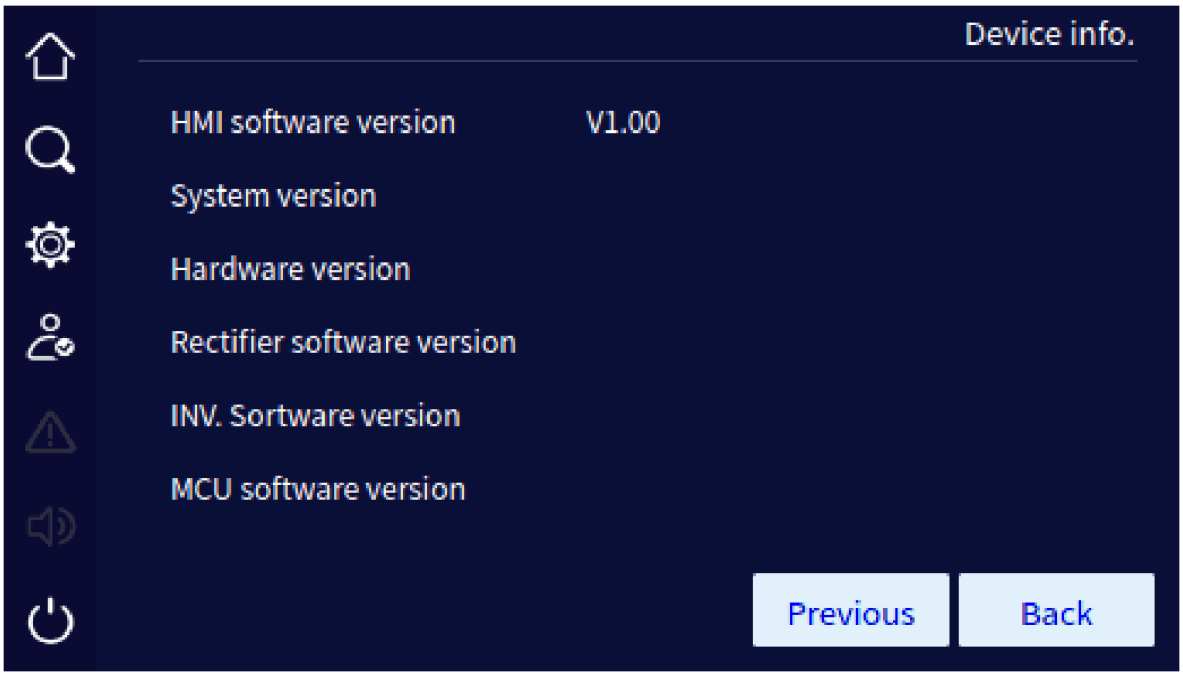


FIGURE 4-21 Device information page 1

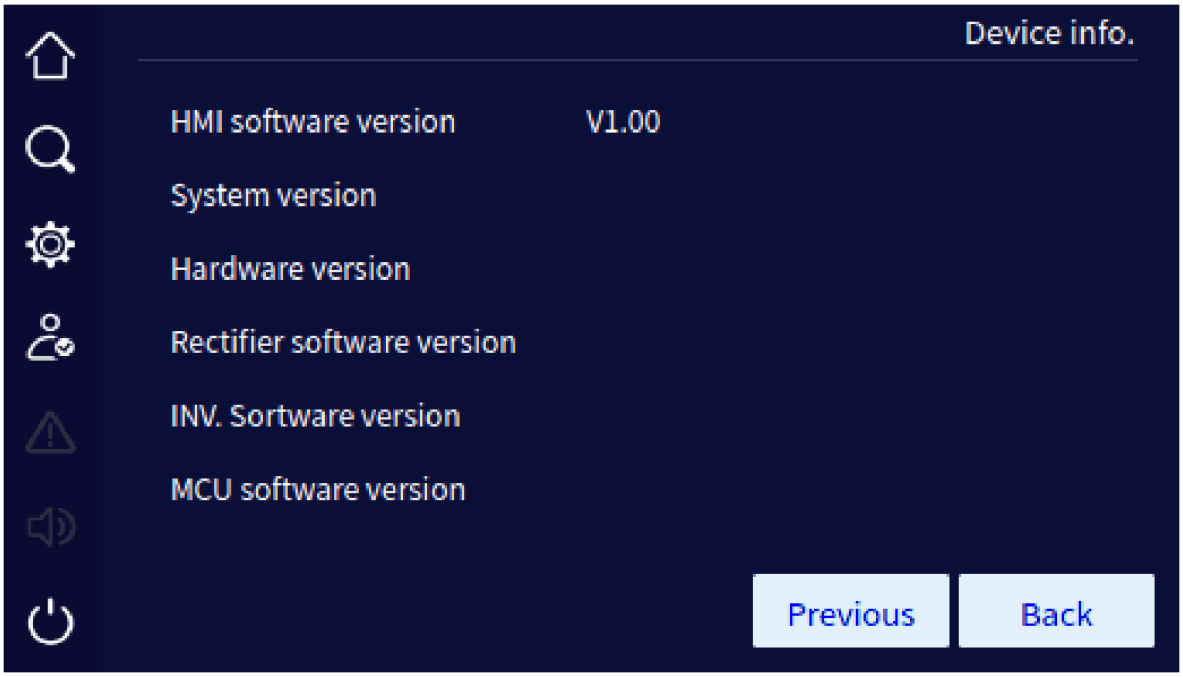


FIGURE 4-22 Device information page 2

## 4.5 Setting Management Page

On the main page, after login, click the icon to open the setting management page, as shown in Figure 4-23. The page includes: system management, battery management, battery test, dry contact, HMI (screen) setting, password setting, device configuration, dedust setting and record management.

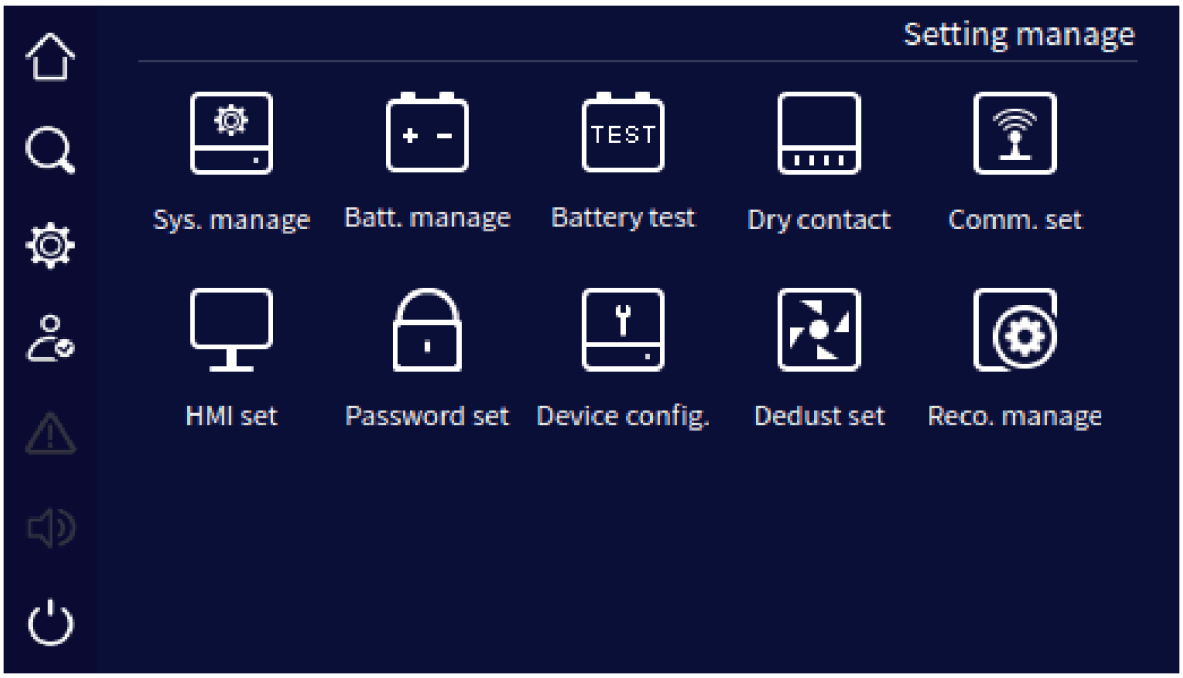


FIGURE 4-23 Setting management page

### 4.5.1 System Management Page

In the system management page, the user can set the output voltage, output frequency and output voltage adjustment, the bypass voltage and frequency range, ECO mode and the ECO voltage and frequency range, as shown in Figure 4-24 to Figure 4-26.

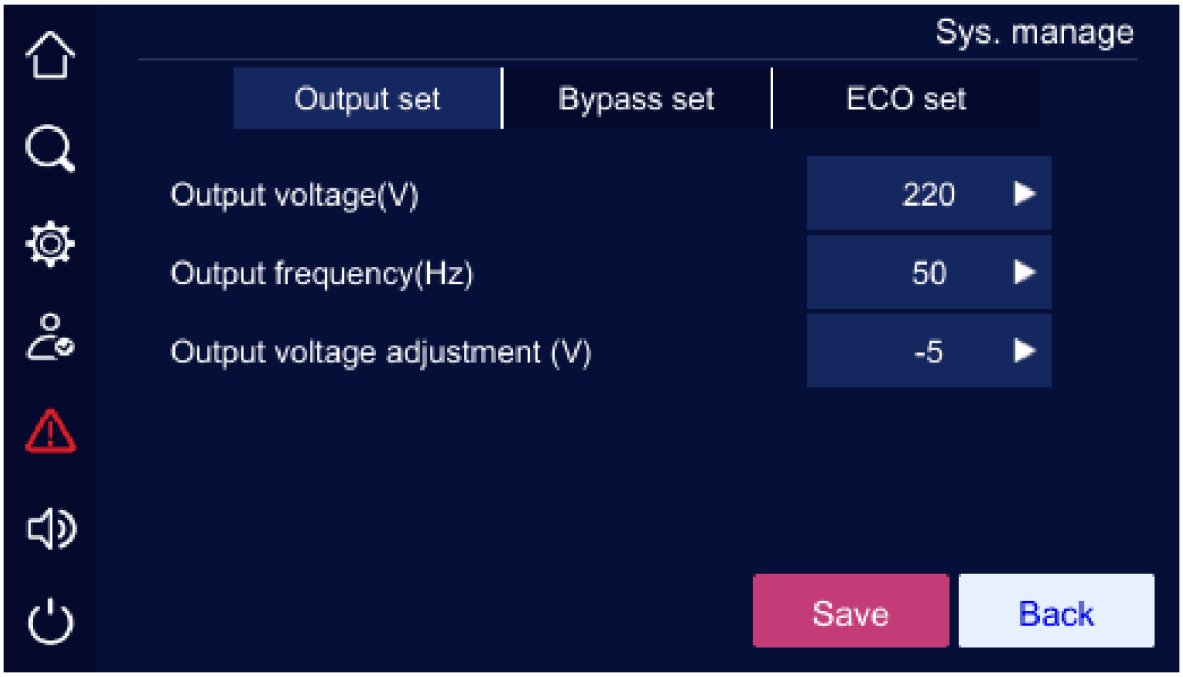


FIGURE 4-24 System manage page 1 of output set

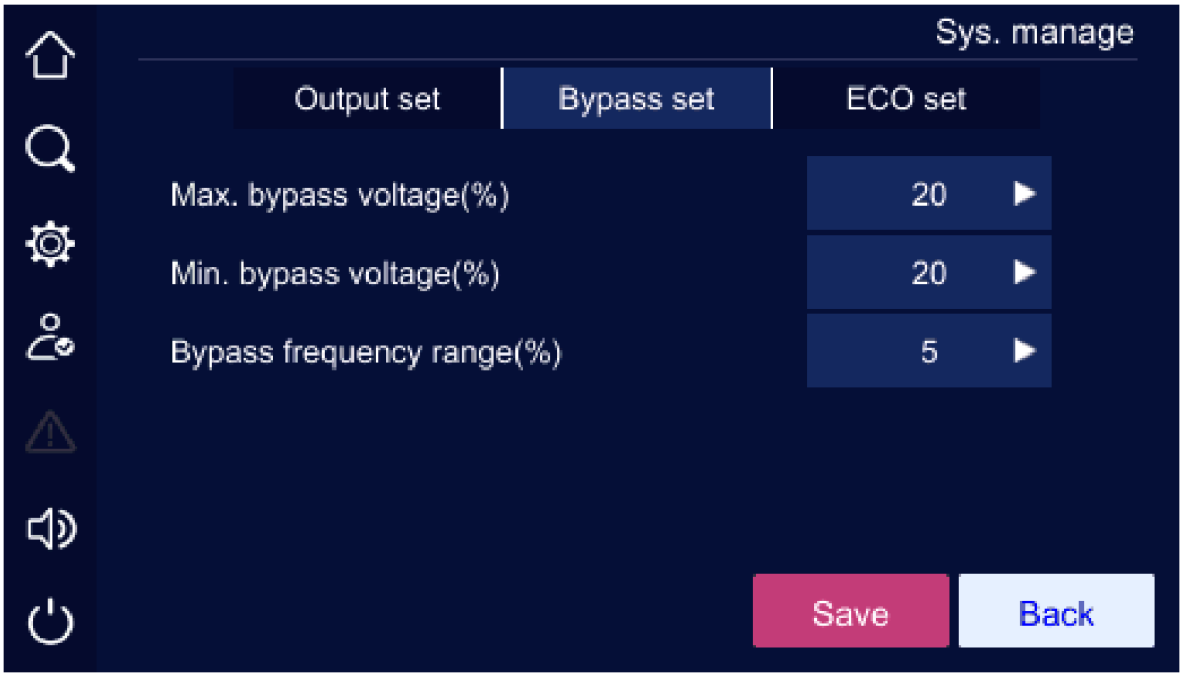


**FIGURE 4-25** System manage page 2 of bypass set

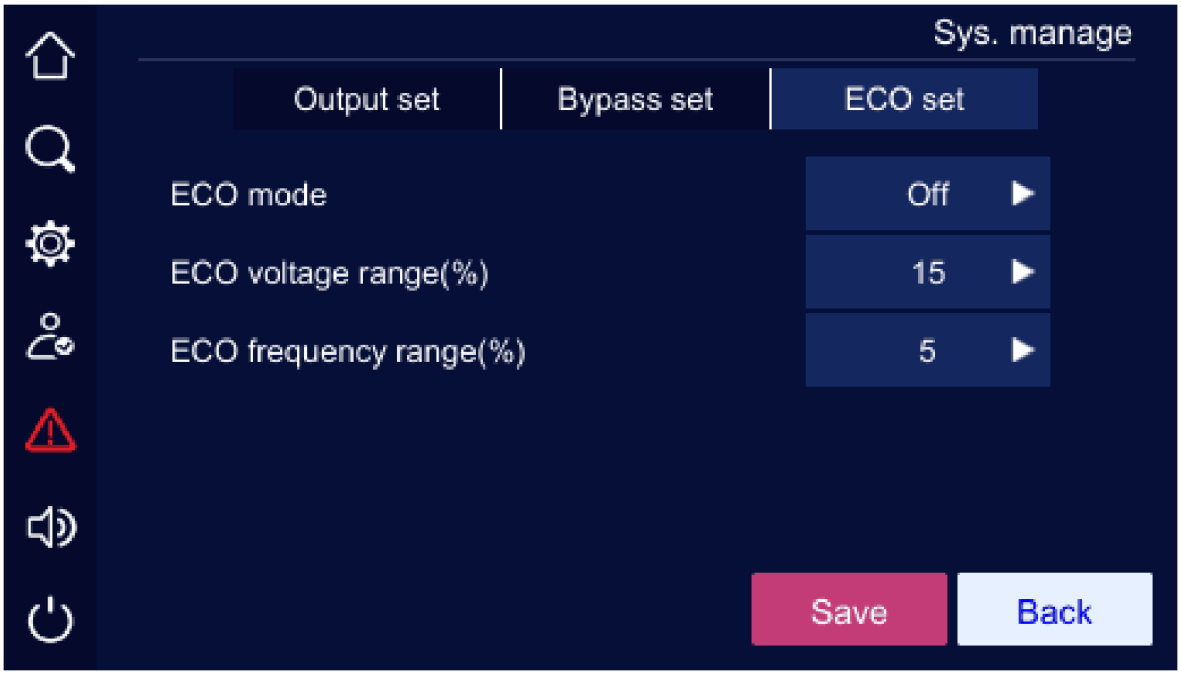


**FIGURE 4-26** System management page 3 of ECO set

**TABLE 4-1** Setting description for system management page

| Item | Settable value |
|---|---|
| Output voltage (V) | 220V, 230V, 240V |
| Output frequency (Hz) | 50Hz, 60Hz |
| Output voltage adjustment (V) | -5~ +5 |
| Max. bypass voltage (%) | 10%, 15%, 20% |
| Min. bypass voltage (%) | 10%, 15%, 20% |
| Bypass frequency range (%) | 5%, 10% |
| ECO mode | On, Off |
| ECO voltage range (%) | 10%, 15% |
| ECO frequency range (%) | 5%, 10% |

After changing a parameter, click the Save button to save it. If the setting is saved, a ✓ icon appears to the right of the parameter (Figure 4-27); if it fails, a ✗ icon appears there (Figure 4-28).

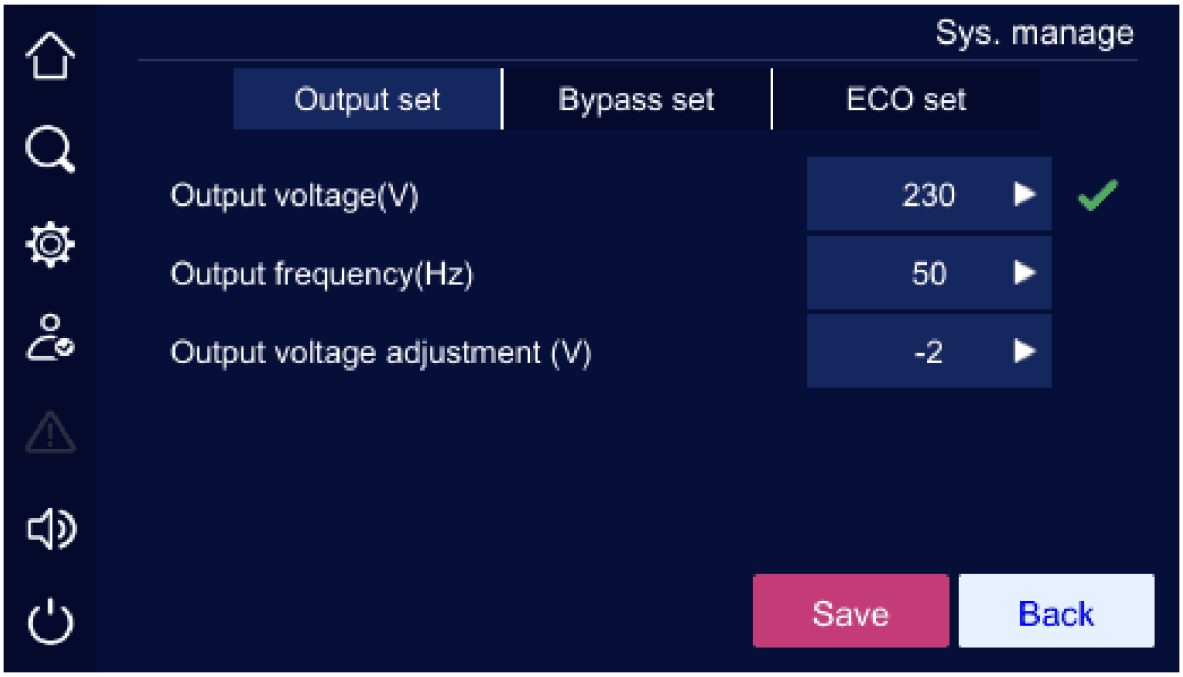


**FIGURE 4-27** Successful setting

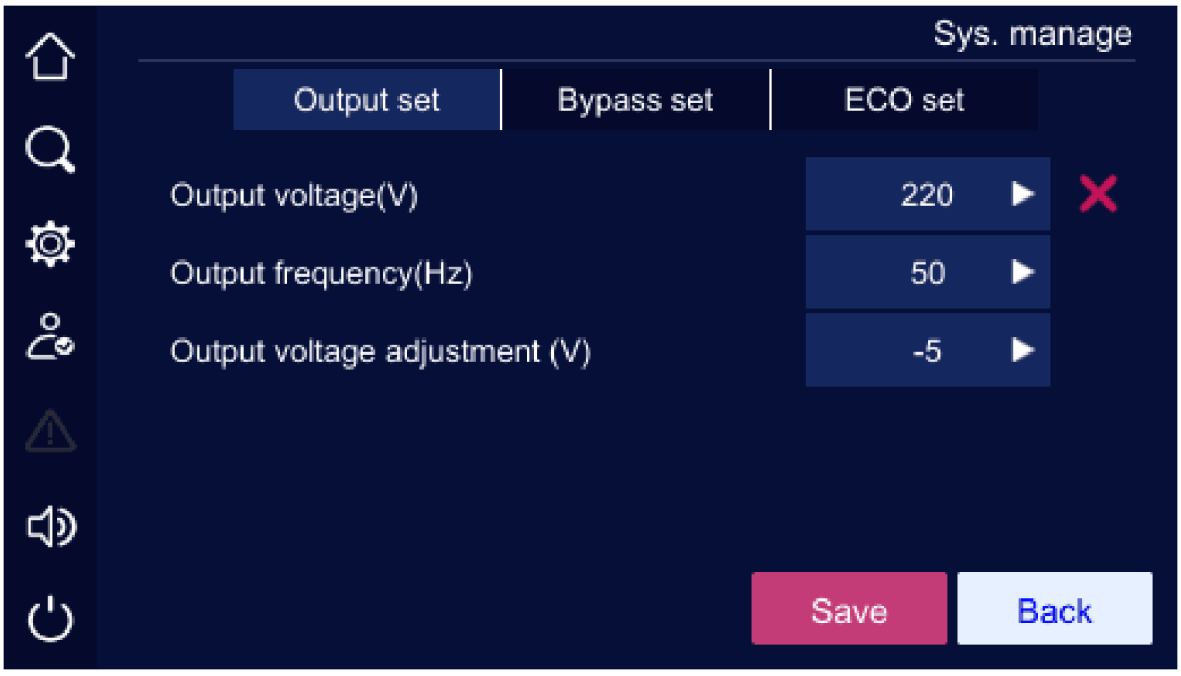


**FIGURE 4-28** Unsuccessful setting

### 4.5.2 Battery Management Page

The battery management page includes equalizing charge voltage, floating charge voltage, charge current, battery test ending voltage, low-voltage warning, low-voltage protection, temperature compensation coefficient, force equalizing charge. The battery management page is shown in Figure 4-29 to Figure 4-32.

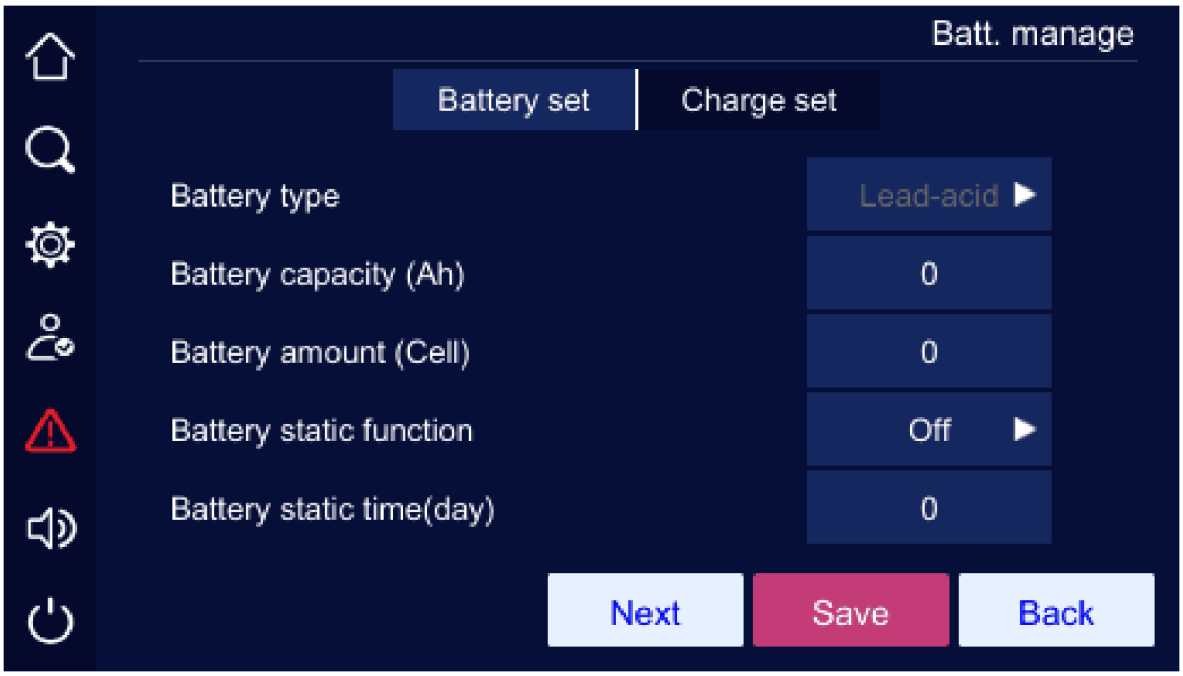


FIGURE 4-29 Battery set page 1 of battery management

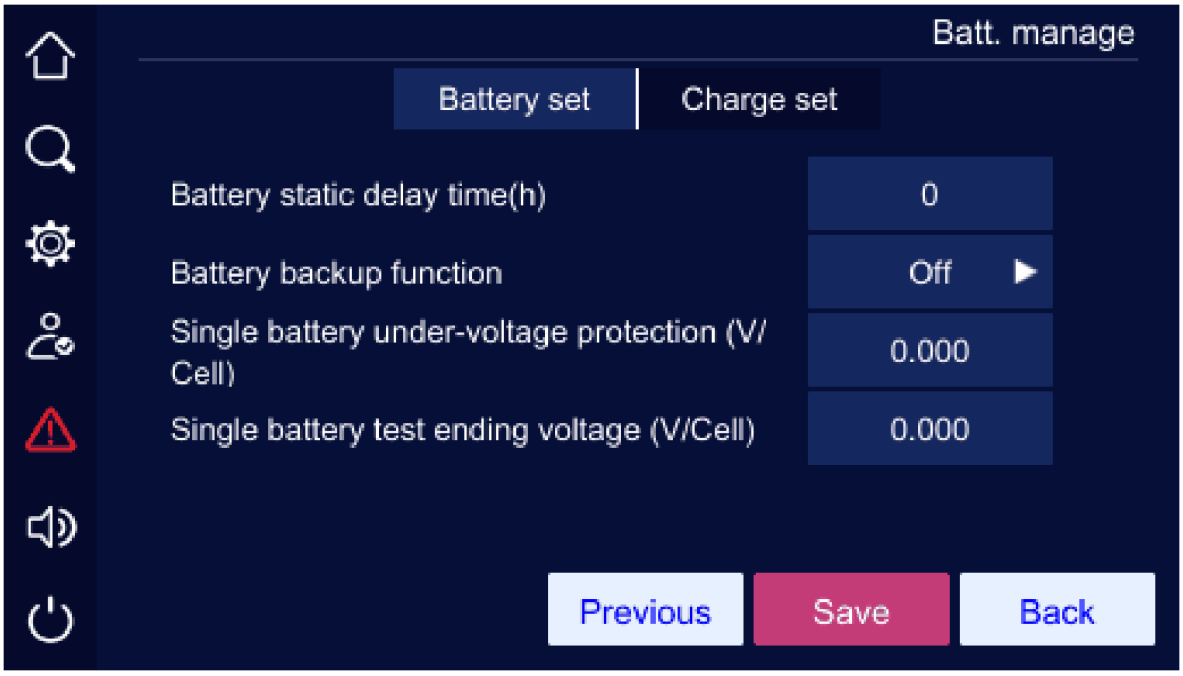


FIGURE 4-30 Battery set page 2 of battery management

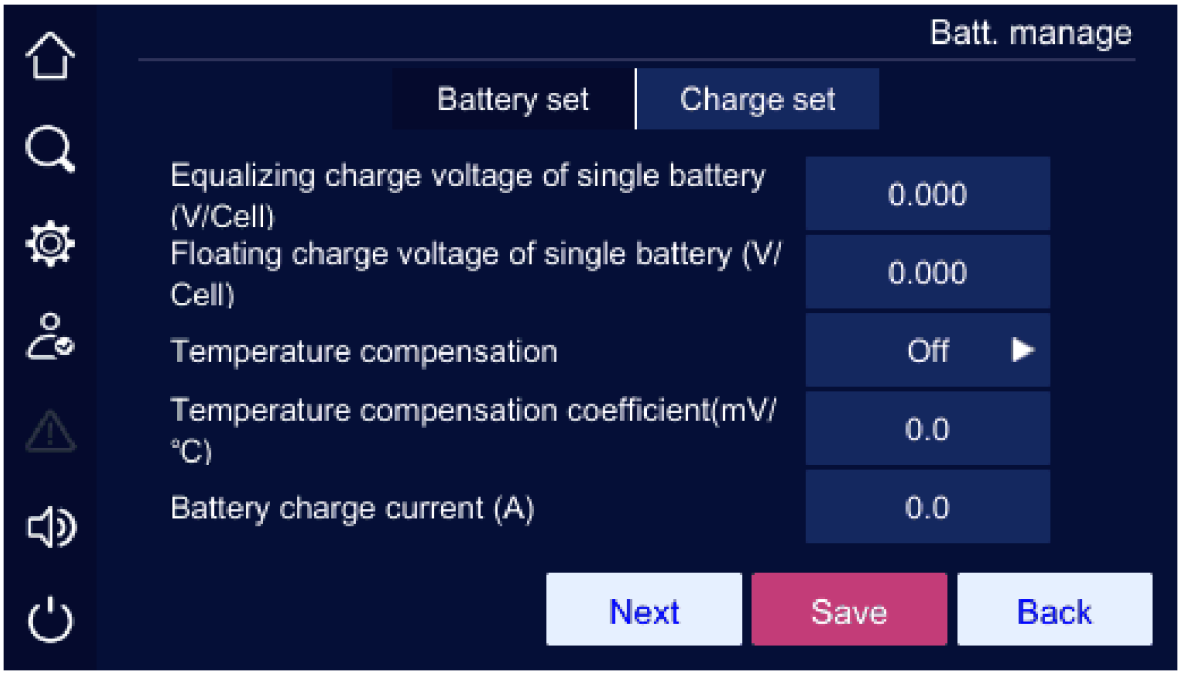


**FIGURE 4-31** Charge set page 1 of battery management

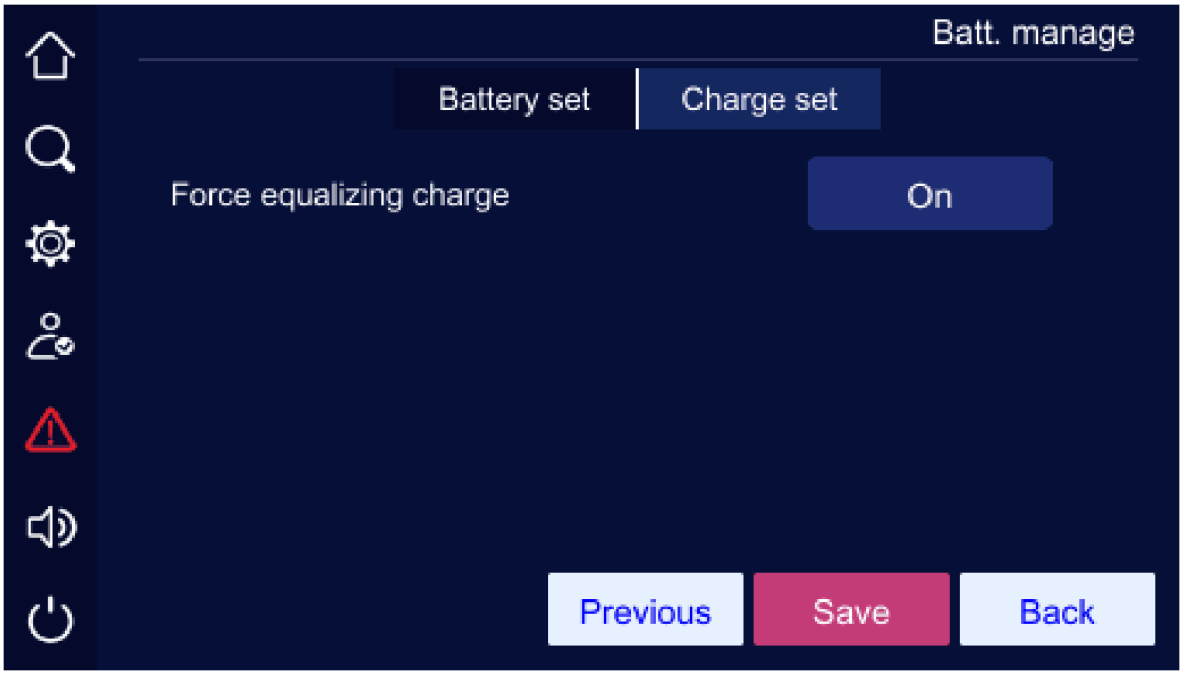


**FIGURE 4-32** Charge set page 2 of battery management

When you tap a number field, the permitted range is shown above the keypad; values outside the range are rejected. After setting, click Save button to save the setting. Successful setting/unsuccessful setting mark is the same as that of system management.

**TABLE 4-2** Setting description for battery management page

| Item | Settable value |
|---|---|
| Battery type | Lead-acid |
| Battery capacity (Ah) | 1~2000 |
| Battery amount (Cell) | ±48~±120 (10K); ±72~±120 (15K/20K/30K/40K) |
| Battery static function | On, Off |
| **Item** | **Settable value** |
| Battery static time (day) | 1~30 |
| Battery static delay time (h) | 1~48 |
| Battery backup function | On, Off |
| Single battery low-voltage protection (V/Cell) | 1.667~1.867 |
| Single battery test ending voltage (V/Cell) | 1.667~1.867 |
| Equalizing charge voltage of single battery (V/Cell) | 2.083~2.417 |
| Floating charge voltage of single battery (V/Cell) | 2.083~2.333 |
| Temperature compensation | On, Off |
| Temperature compensation coefficient (mV/ °C) | 0~5.0 |
| Battery charge current (A) | 10K-20K UPS: 1.0~10.0; 30K-40K UPS: 1.0~20.0 |
| Force equalizing charge | On |

### 4.5.3 Battery Test Page

The battery test can be a standard test or a deep test, and a running test can be cancelled. The page shows the test status, battery current, consumed capacity and test time. The battery test page is as shown in Figure 4-33.

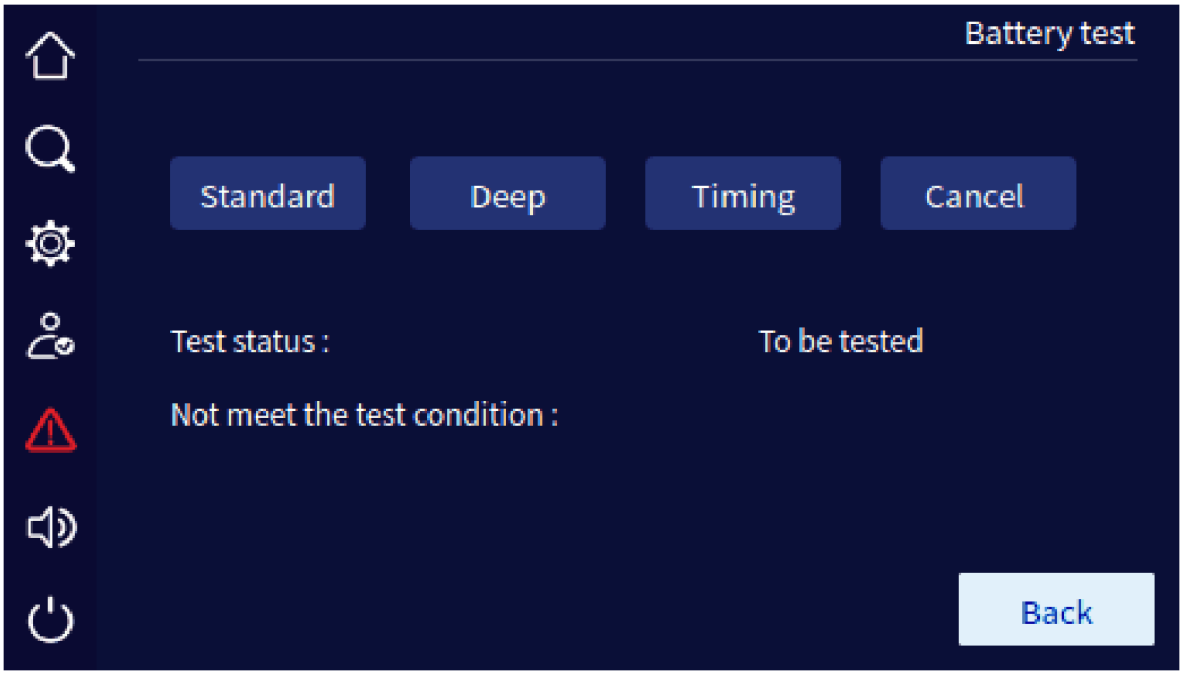


**FIGURE 4-33** Battery test page

### 4.5.4 Dry Contact Page

In the setting management page, click the dry contact icon to enter the dry contact setting pages, as shown in Figure 4-34 to Figure 4-37.

> **NOTE**
> All dry contacts are set in the same way; dry contact 1 is shown below as an example.

**INPUT DRY CONTACT**

On the Dry contact page, click the " " icon to open the corresponding dry contact

> **NOTE**
> setting page, as shown in Figure 4-35. Click " " button to save the dry contact setting and return to the Dry contact page. After setting, click Save button on Dry contact page to save the setting. Successful setting/unsuccessful setting mark is the same as that of system management.




**FIGURE 4-34** Input dry contact setting page 1

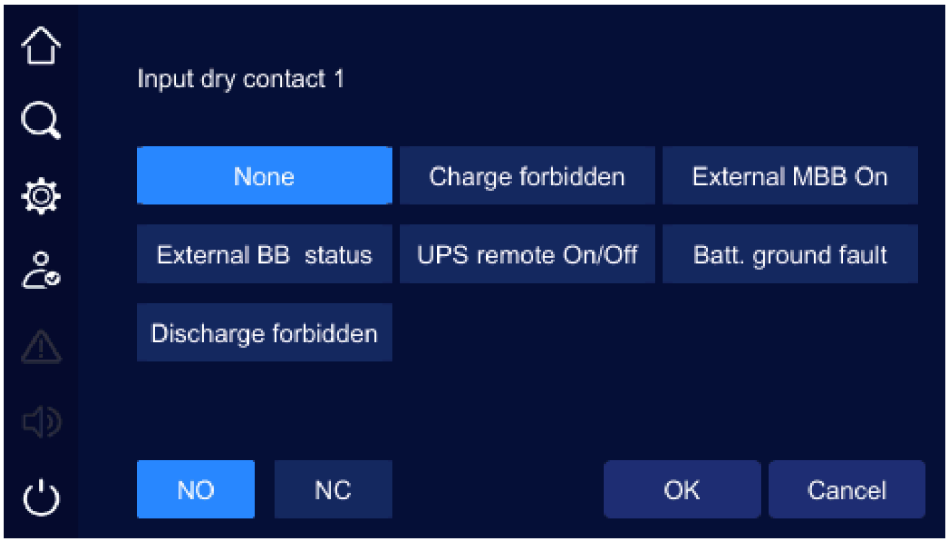


**FIGURE 4-35** Input dry contact setting page 2

### OUTPUT DRY CONTACT

On the Dry contact page, click the " " icon to open the corresponding dry contact

> **NOTE**
>
> setting page, as shown in Figure 4-37. Click " " button to save the dry contact setting and return to the Dry contact page. After setting, click Save button on Dry contact page to save the setting. Successful setting/unsuccessful setting mark is the same as that of system management.

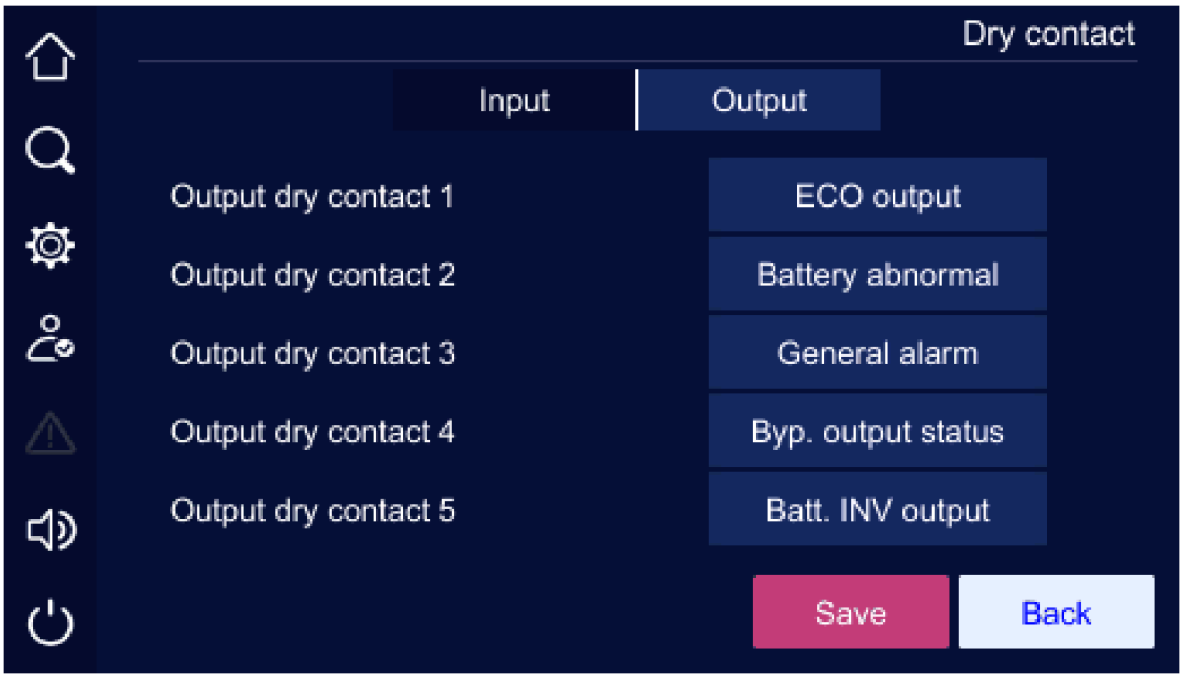


**FIGURE 4-36** Output dry contact setting page 1

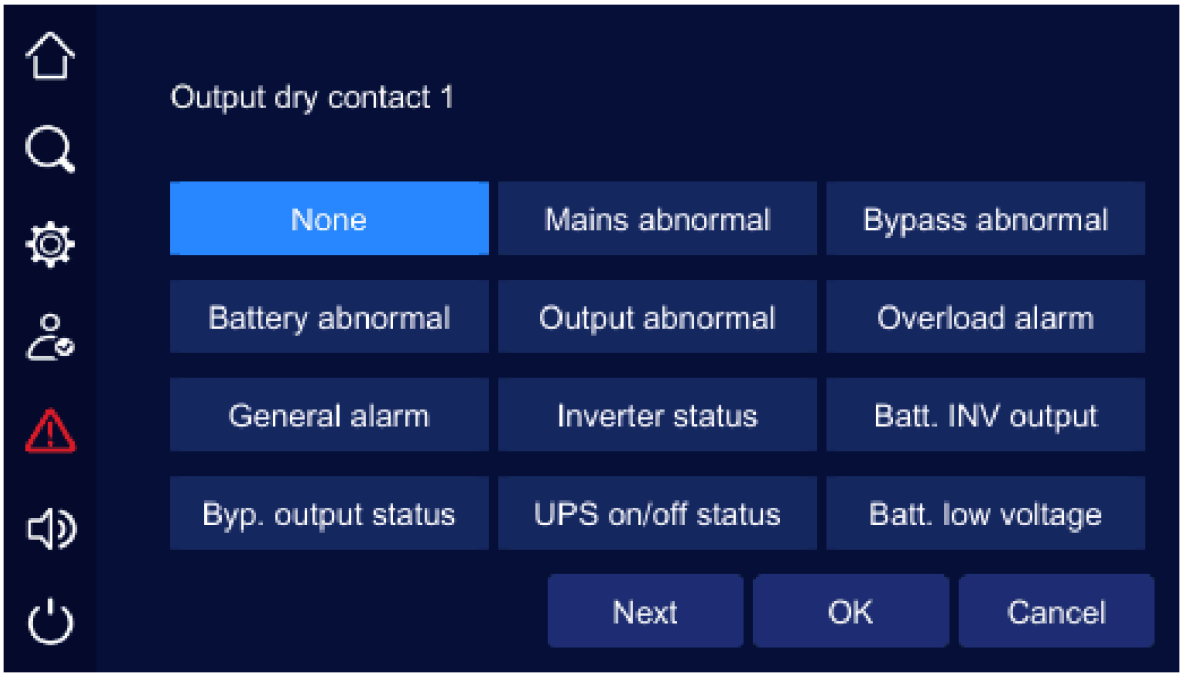


**FIGURE 4-37** Output dry contact setting page 2

### 4.5.5 HMI Setting Page

On the HMI (screen) setting page, you can set the date, time, language, backlight and screen saver, as shown in Figure 4-38.

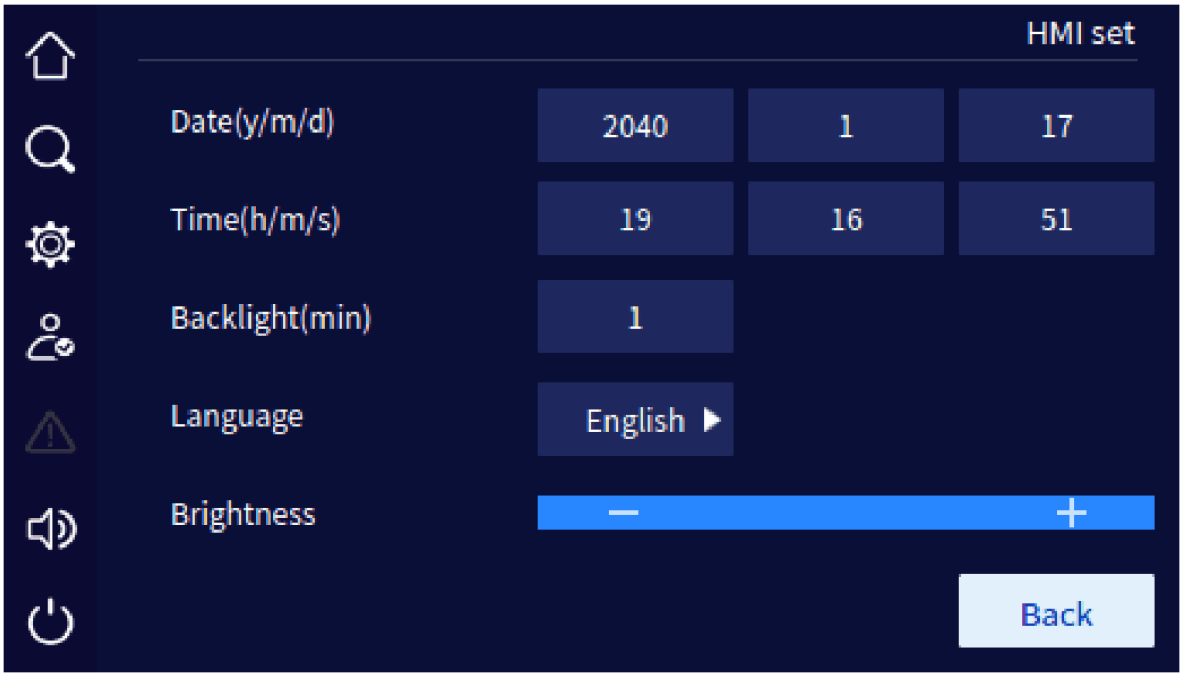


FIGURE 4-38 Screen setting page

### 4.5.6 Password Setting Page

On the setting management page, click the "password set" icon to open the password setting page, as shown in Figure 4-39.

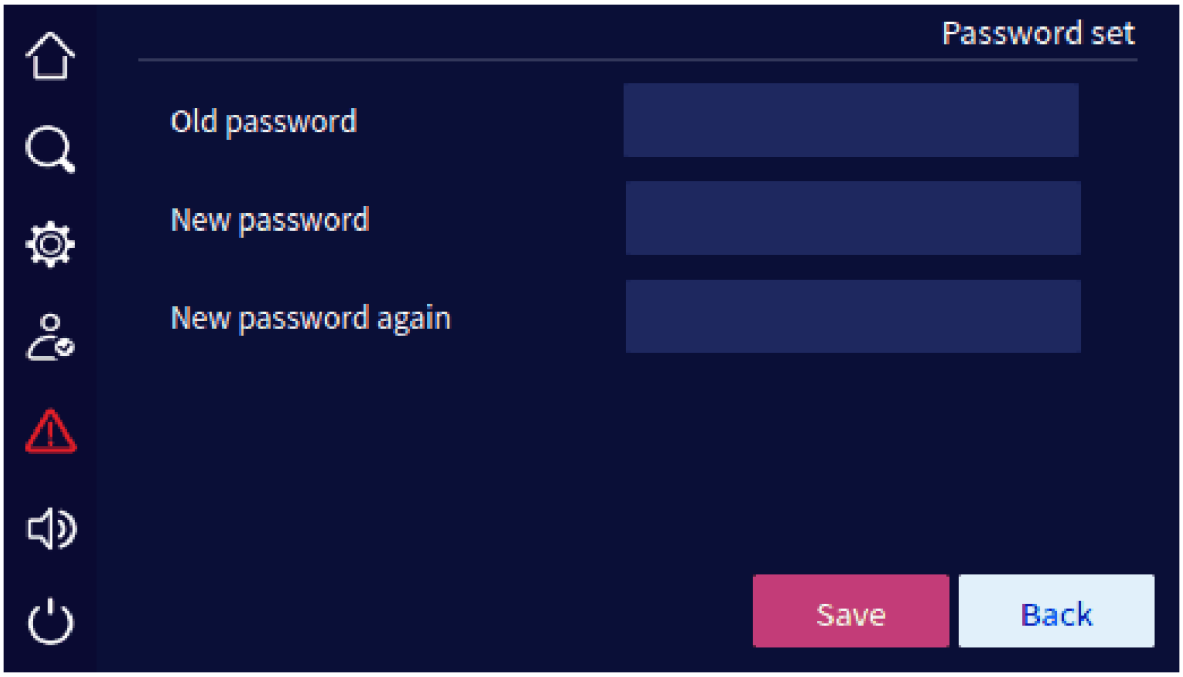


FIGURE 4-39 Password setting page

### 4.5.7 Device Configuration Page

On the setting management page, click the "device config" icon to open the device configuration page, as shown in Figure 4-40 to Figure 4-43.

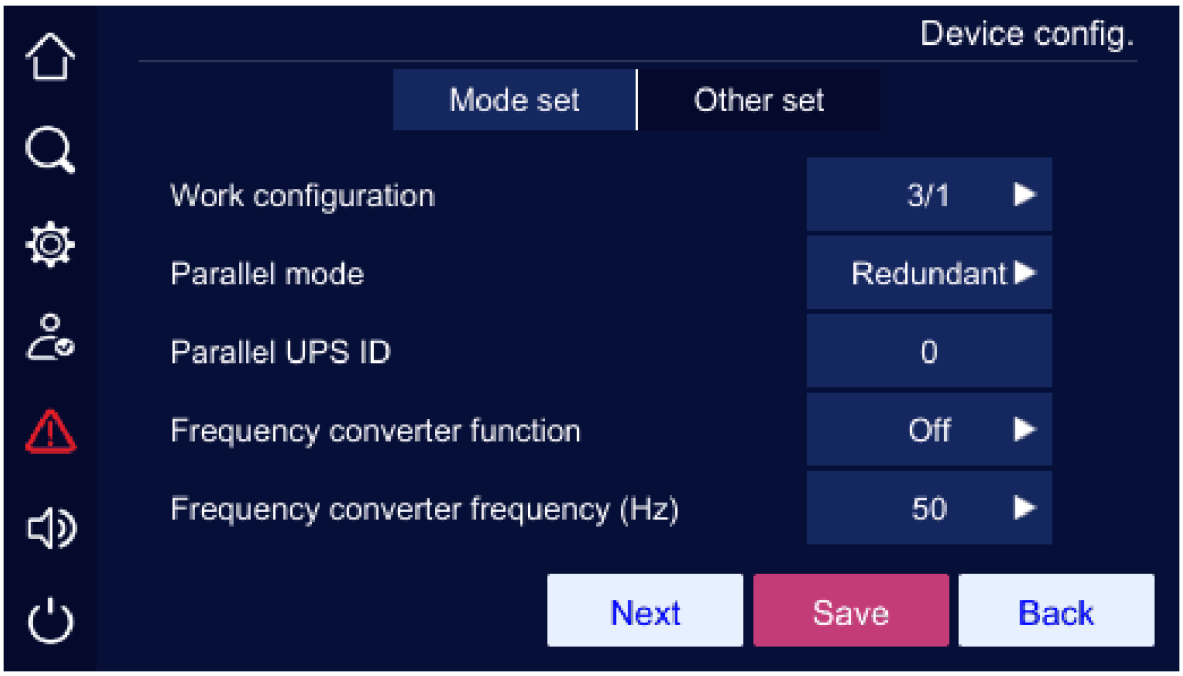


FIGURE 4-40 Mode set page 1 of device configuration




FIGURE 4-41 Mode set page 2 of device configuration

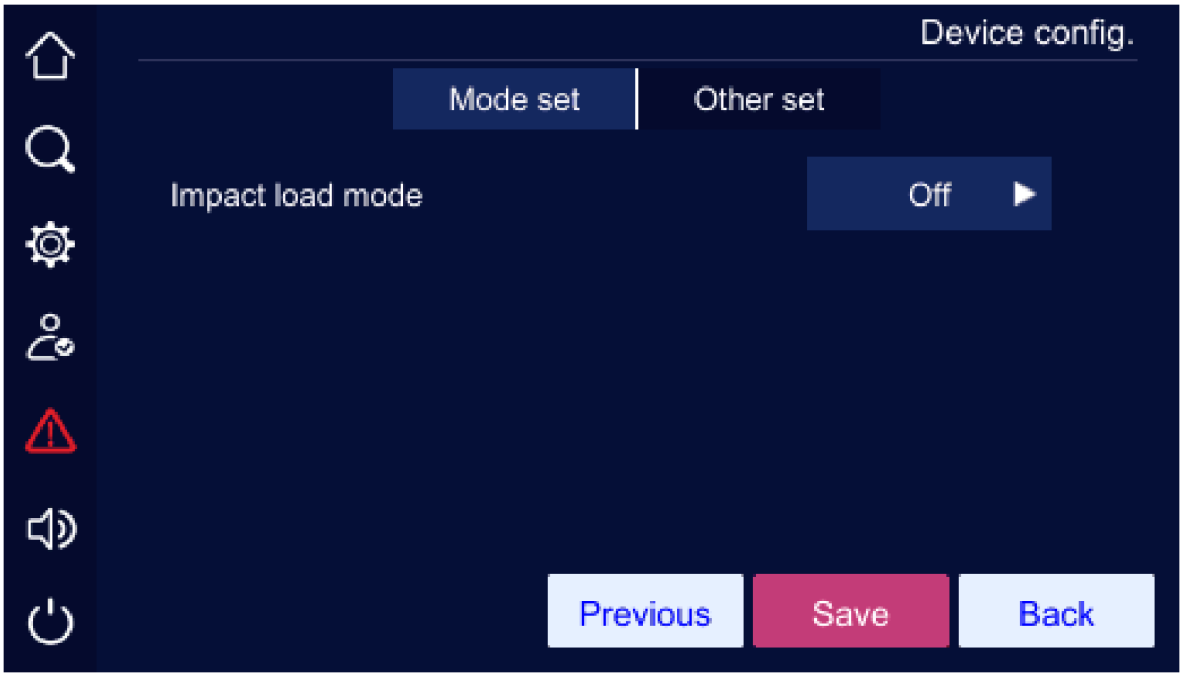


**FIGURE 4-42** Mode set page 3 of device configuration

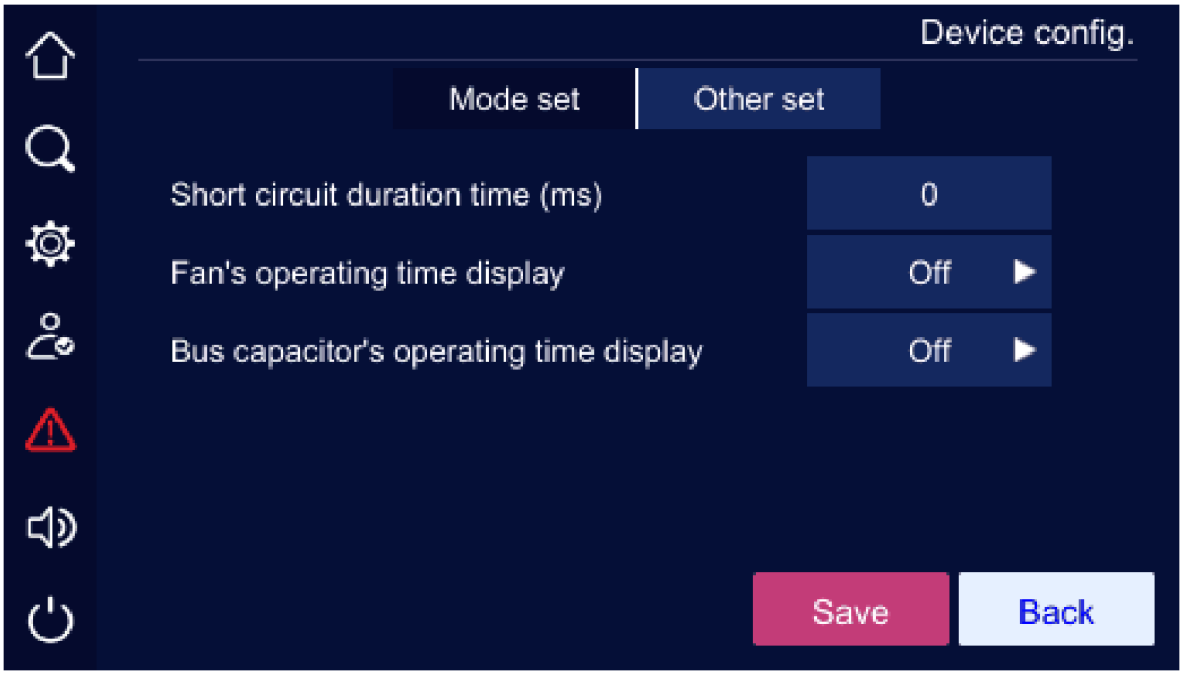


**FIGURE 4-43** Other set page of device configuration

When you tap a number field, the permitted range is shown above the keypad; values outside the range are rejected. After setting, click Save button to save the setting. Successful setting/unsuccessful setting mark is the same as that of system management.

**TABLE 4-3** Setting description for device configuration page

| Item | Settable value |
|---|---|
| Short circuit duration time (ms) | 10-200 |
| Fan's operating time display | On, Off |
| Bus capacitor's operating time display | On, Off |
| Work configuration | 10K-20K UPS: 3/3, 3/1, 1/1; 30K-40K UPS: 3/3, 3/1 |
| **Item** | **Settable value** |
| Parallel mode | Redundant, Single, Expand, BSC |
| Parallel UPS ID | 1-4 |
| Frequency converter function | On, Off |
| Frequency converter frequency | 50, 60 |
| Self-start when power on | UPS will not turn off, On, Off |
| Bypass disable | On, Off |
| Bypass disable when short circuit | On, Off |
| Test load function | On, Off |
| Test load rate (%) | 10-100 |
| Impact load mode | On, Off |

### 4.5.8 Dedust Setting Page

On the setting management page, click the "dedust set" icon to open the dedust setting page, as shown in Figure 4-44.

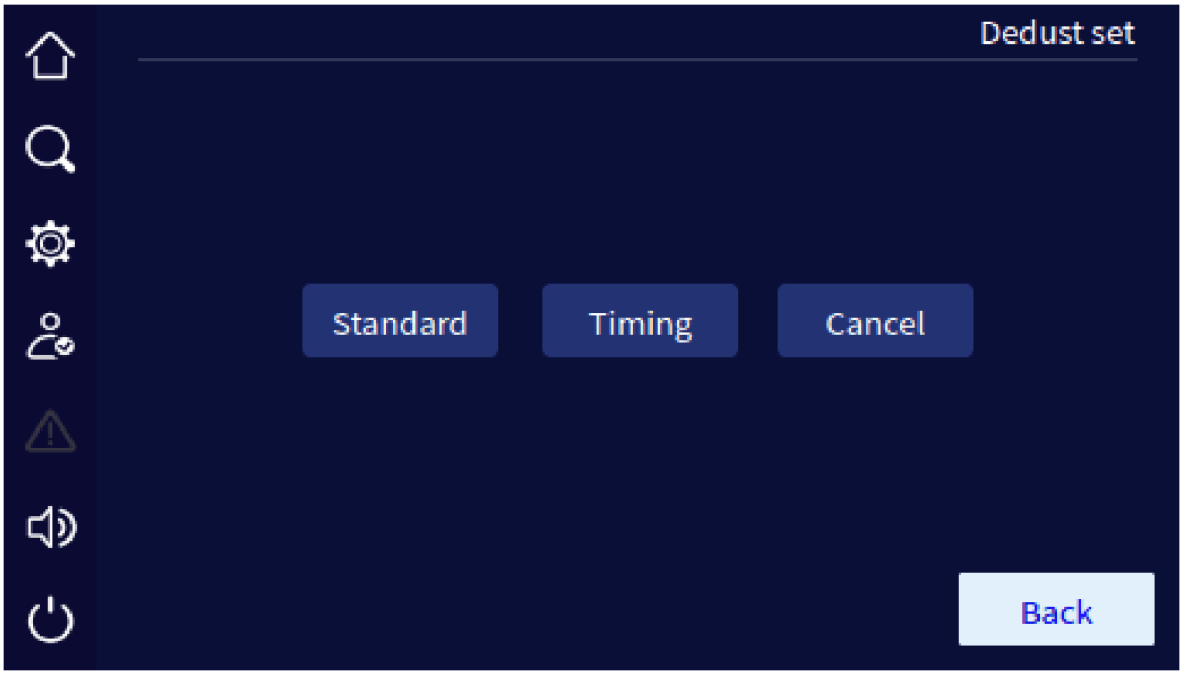


**FIGURE 4-44** Dedust set page

### 4.5.9 Record Management Page

The record management page can export and clear the history log, user log and wave capture. Click the button to export the selected items to a USB flash drive, or the button to clear them. Before clearing, a confirmation window appears (Figure 4-46).

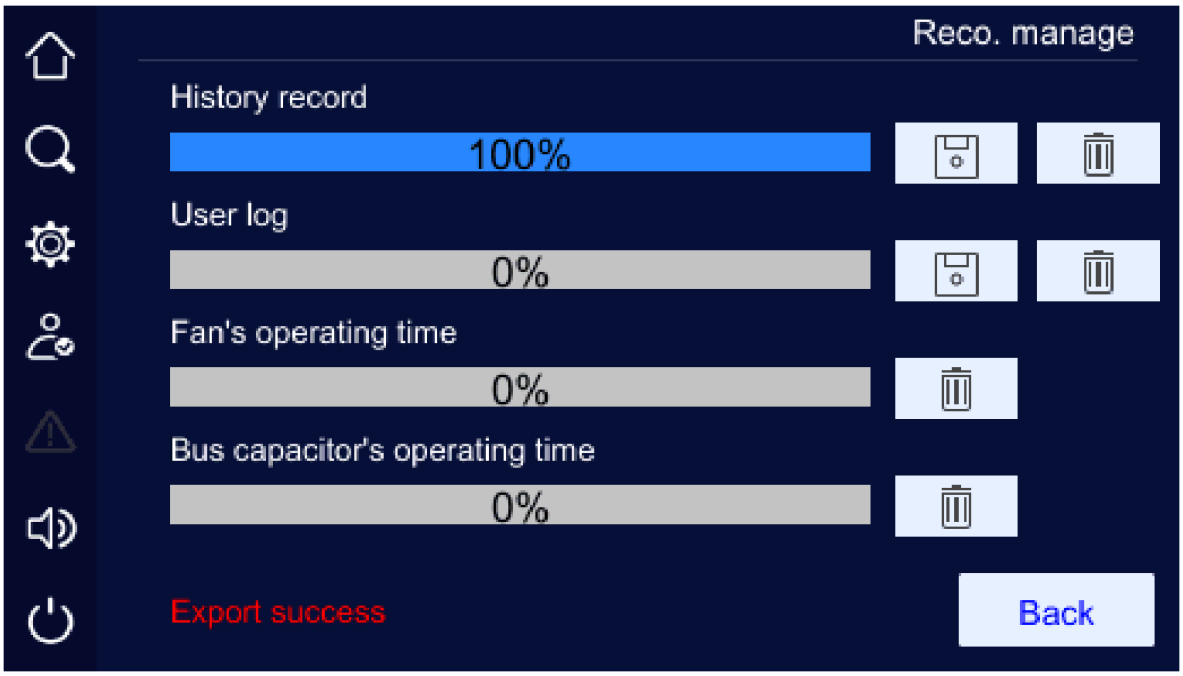


FIGURE 4-45 Export success of record manage page

Insert a USB flash drive to back up the records, as shown in Figure 4-45 and Figure 4-47.

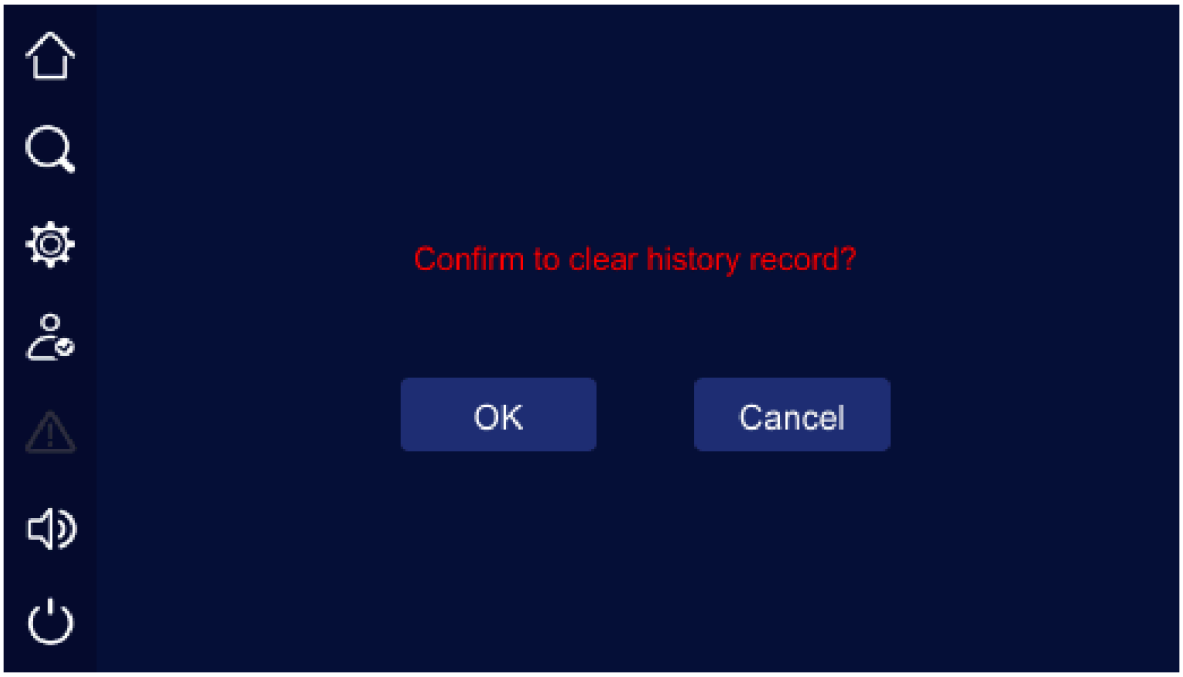


FIGURE 4-46 Confirmation for clearing the log

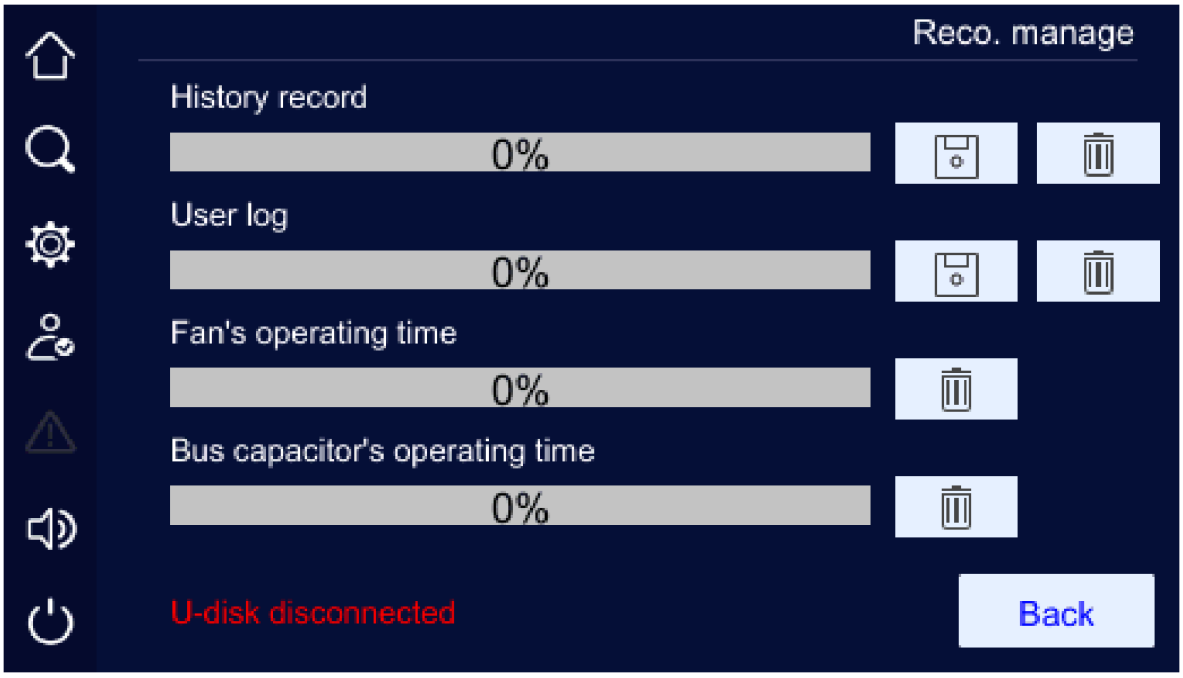


FIGURE 4-47 The USB flash drive is not inserted

## 4.6 Current Fault Page

When the UPS has a fault, the icon on the left lights up, as shown in Figure 4-48. Click it to show the current fault information, as shown in Figure 4-49.

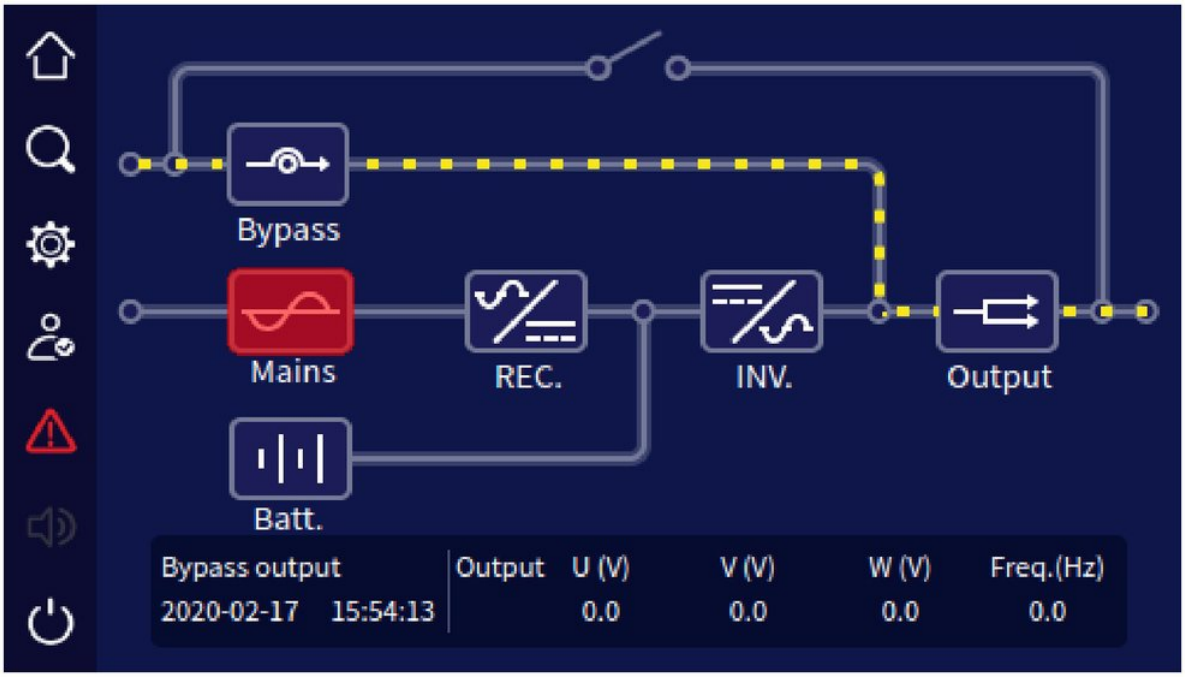


FIGURE 4-48 Fault alarm status

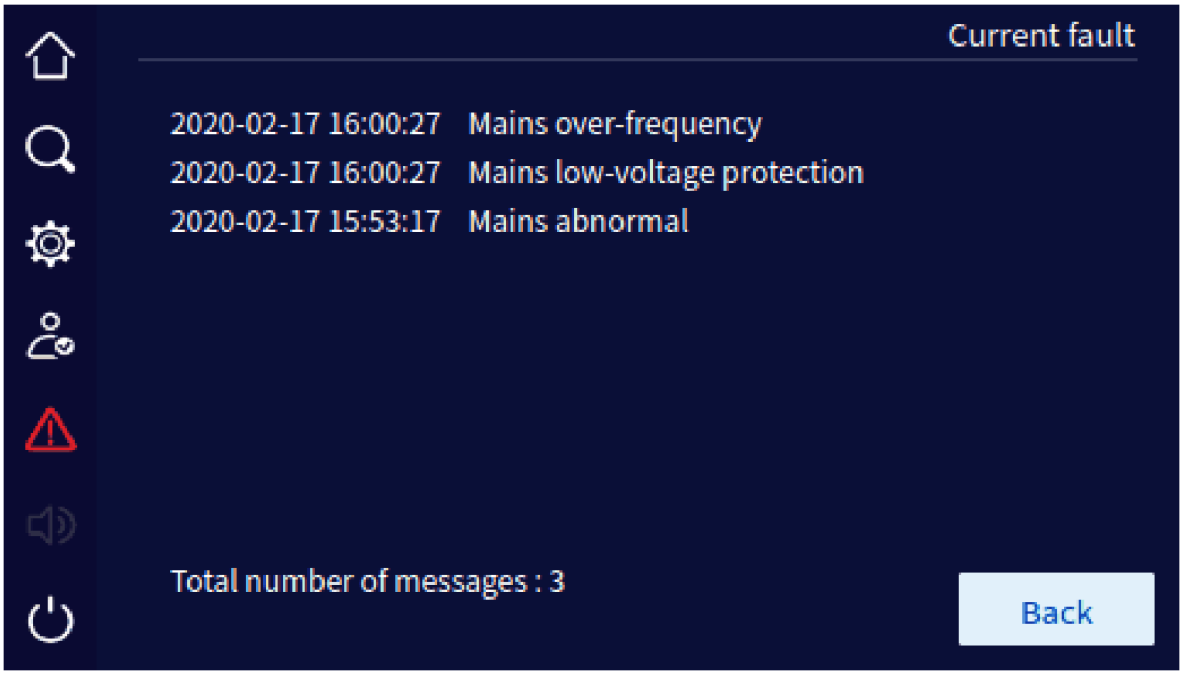


FIGURE 4-49 Current fault information

## 4.7 Buzzer Control

When the UPS has a fault, the buzzer icon lights up. Click the icon to mute or unmute the buzzer. Figure 4-50 shows the buzzer mute status.

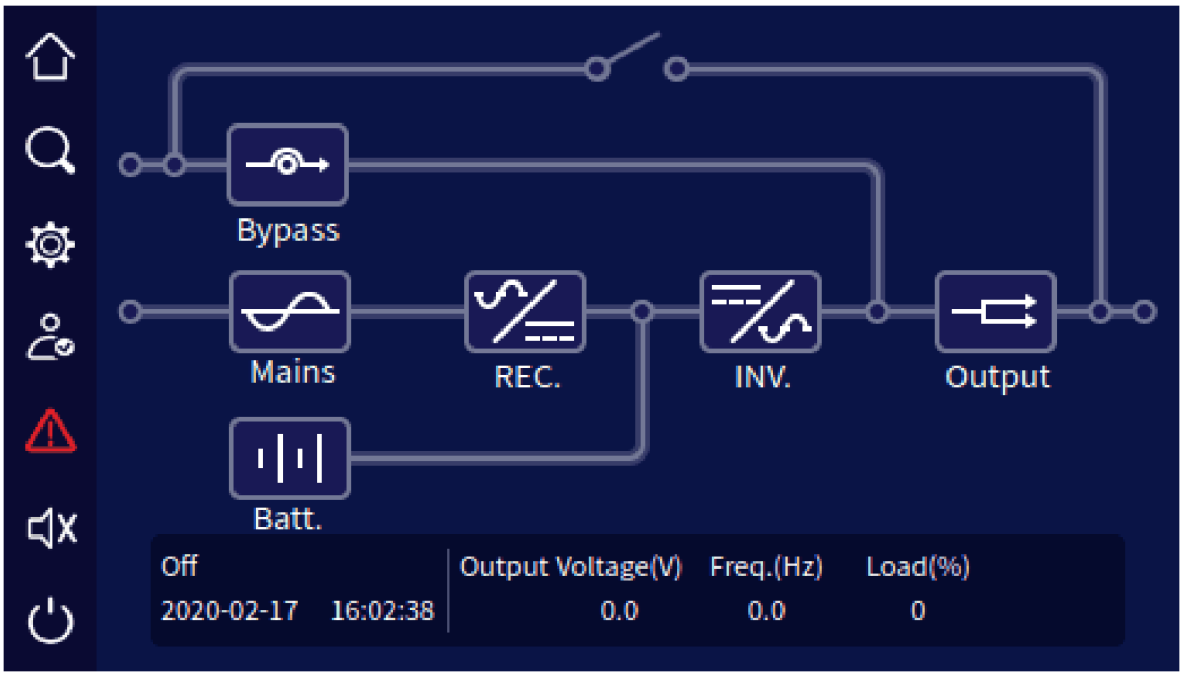


FIGURE 4-50 Buzzer mute status

> **NOTE**
> A continuous (long) beep cannot be muted.

## 4.8 ON/OFF Operation

On the main page, click the icon to start or shut down the UPS. When the UPS is off, the screen asks “Confirm to power on?”; when it is on, it asks “Confirm to power off?”, as shown in Figure 4-51 and Figure 4-52.

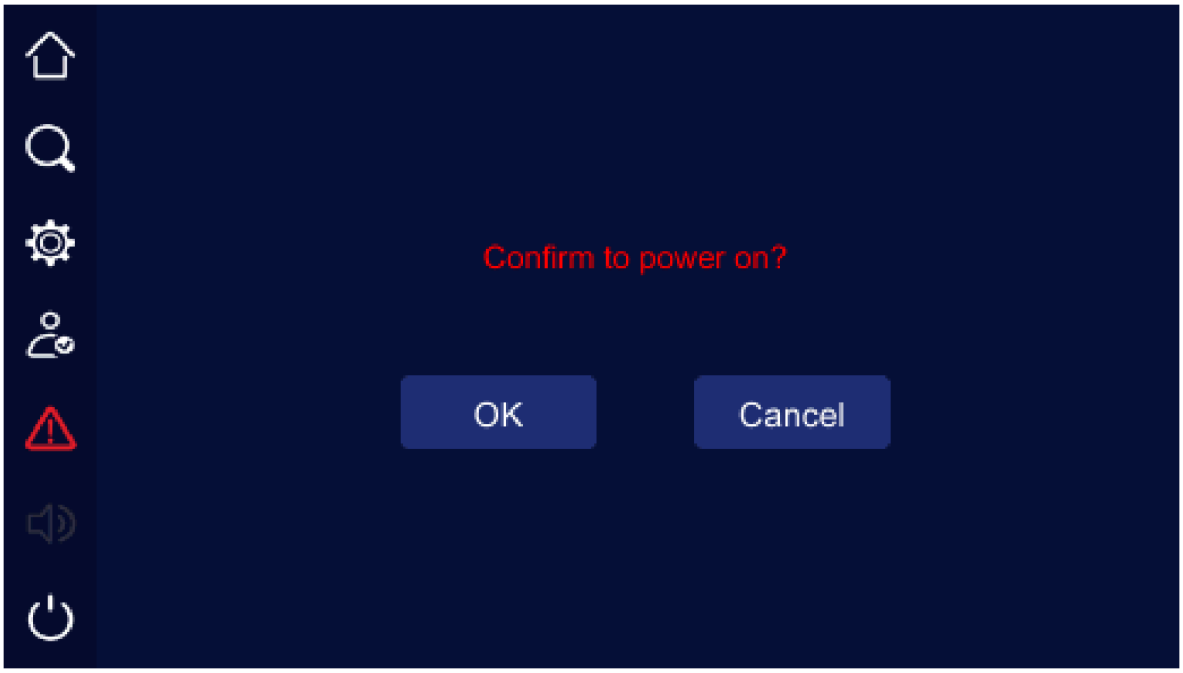


FIGURE 4-51 Confirm to turn on page

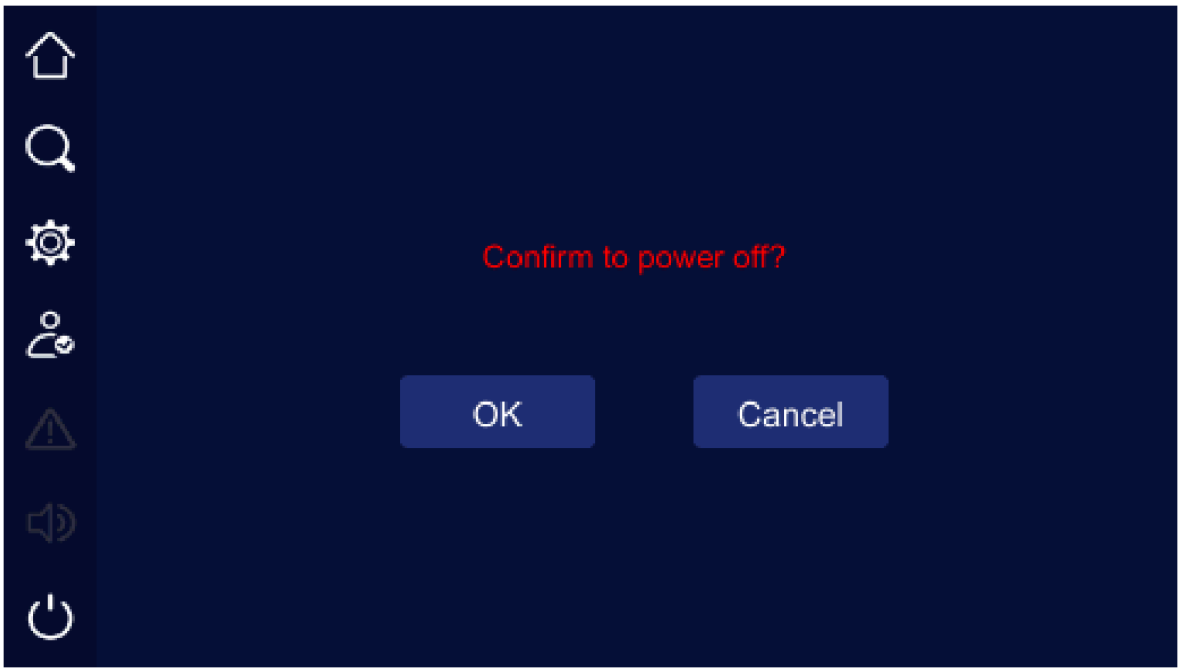


FIGURE 4-52 Confirm to turn off page

CHAPTER 5

# 05 Use and Operation

This chapter mainly describes the operation process, operation method, daily maintenance and troubleshooting, etc.

IN THIS CHAPTER

5.1 Check Before Startup
5.2 Startup Operation
5.3 Shutdown Operation
5.4 Parallel System Operation
5.5 Periodic Preventative Maintenance
5.6 Battery Maintenance
5.7 Troubleshooting

## 5.1 Check Before Startup

- Check that all connections are tight and that the colours of the AC cables comply with the standard.
- Check that the UPS is reliably earthed.
- Check that the voltage between the neutral and earth conductors is less than 5 Vac.
- If the UPS is equipped with a remote monitoring device, check that the RS485 port is wired correctly.
- For long-backup models, check that the wiring between the UPS and the battery cabinet is correct and secure.
- Check that the cables are tidy and bundled as specified.
- Check that the installation and wiring allow future modification, expansion and maintenance.
- Check that there is no short circuit at the UPS output and that the load does not exceed the rated capacity of the UPS.

## 5.2 Startup Operation

PROCEDURE

1. Close the mains, bypass and battery breakers.
2. When the touch screen lights up, press both **ON** buttons on the front panel together for 1 s to start the UPS.
3. After about 10 s, when the UPS is running steadily, switch on the loads (PCs, etc.).

**⚠ CAUTION**

Switch on the loads in order from the largest to the smallest, to avoid overload protection when a large load starts.

## 5.3 Shutdown Operation

PROCEDURE

1. Switch off the loads and let the UPS run without load for about 10 minutes to cool down.
2. Press both **OFF** buttons on the front panel together for 1 s to shut down the UPS.
3. Open the battery, bypass and mains breakers.

## 5.4 Parallel System Operation

### 5.4.1 Start Parallel System

**⚠ CAUTION**

1. Ensure that each UPS in the parallel system is equipped with the Parallel Kit-T(2m) NT-PA (optional) for parallel and has been set to the same parallel mode on the screen.
2. For the corresponding screen settings, see 4.5.7 Device Configuration Page.
3. Before starting, make sure that all UPS breakers are open, and do not switch on any load until the whole parallel system has started.

To start the parallel system:

PROCEDURE

1. Make sure that every UPS of the parallel system is installed correctly, then start the UPS units one by one according to 5.2 Startup Operation.
2. When every UPS is on inverter output, measure the inverter voltage of each unit: the difference between the highest and lowest voltage must be within 8 V. Close the output breakers of the units and measure the circulating current: it must be less than 3 A.

If the difference exceeds 8 V, measure the output voltage of each UPS and check that all are at the set voltage (default 230 V). If the difference exceeds 15 V, contact AEC service. An excessive circulating current between the parallel units leads to an inverter fault: if it exceeds 3 A, contact AEC service.

3. Close the main output breaker of the system and each output branch breaker, then switch on the loads one by one.

### 5.4.2 Shutdown Parallel System

Avoid starting and stopping the parallel system frequently.

PROCEDURE

1. Switch off all loads.
2. Shut down the UPS units one by one.
3. Open the breakers of each UPS (for a routine daily shutdown, the breakers may be left closed).

### 5.4.3 Exit Parallel System

If one UPS of the parallel system fails, it leaves the parallel system automatically with an audible and visual alarm. Then carry out the operations shown in Figure 5-1 to disconnect the faulty UPS completely from the parallel system, so that it can be serviced or replaced while the system stays online.

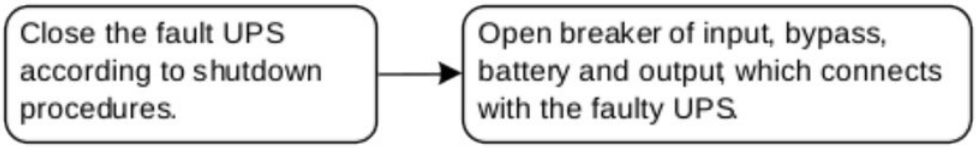


**FIGURE 5-1** Exit parallel system

**⚠ CAUTION**

While the parallel system is running, do not disconnect a unit's output before that UPS has been switched off; otherwise the system output may be disturbed.

### 5.4.4 Redundancy Function of Parallel System

In an N+1 redundant system, the total output must not exceed N times the rated power of a single UPS. If one UPS fails, it can leave or rejoin the parallel system without affecting system operation, which increases reliability. If the output exceeds N times the rated power of a single UPS (each UPS loaded above N/(N+1) of its rated power), the UPS raises an alarm. For example, in a redundant system of two UPS, an overload alarm is given when each UPS is loaded above 50 % of its rated power.

## 5.5 Periodic Preventative Maintenance

To improve the efficiency and reliability of the UPS, perform the following maintenance regularly:

- Clean the UPS regularly with a dry cloth; do not use liquid or spray cleaners. Shut down the UPS before cleaning.
- Check that the input and output connections are tight and in good condition.
- Check the cooling fans regularly and keep the air outlets free of obstructions. Replace damaged fans promptly.
- Check the battery voltage and the working status of UPS regularly to detect faults early.

## 5.6 Battery Maintenance

Battery life depends on the ambient temperature and the number of discharges. Prolonged use at high temperature or deep discharges shorten battery life.

For models with built-in batteries, observe the following:

- Charge the battery for 10 hours before first use. The UPS can be used while charging, but if a power failure occurs during this time the backup time may be shorter than the standard backup time.
- Generally, charge and discharge the battery once every 4 to 6 months. Discharge the battery until the UPS shuts down at low voltage, then recharge it. In hot climates, do this every 2 months. Each charge of the standard battery should last more than 10 hours.
- If the UPS is not used for a long time, charge the battery for more than 10 hours every three months.
- Battery service life is generally 3 to 5 years. Replace batteries that show reduced capacity without delay. Batteries must be replaced by authorised service personnel.

## 5.7 Troubleshooting

### 5.7.1 Common Fault

Table 5-1 lists only some common faults. If in doubt, contact your local AEC office or distributor.

**TABLE 5-1** Troubleshooting

| Fault phenomenon | Possible reason |
|---|---|
| The mains is normal and the UPS output is normal after start-up, but the UPS runs in battery mode and the buzzer beeps intermittently. | Check if the contactors and wiring terminals in the input circuit are in good condition; Check if the displayed input voltage amplitude or frequency of mains on the touch screen is beyond the allowable range of UPS; Check if the mains input breaker is disconnected, if so, close it again. |
| After installation, connecting the power blows the fuse or trips the breaker. | Short circuit in the UPS input or output wiring. |
| After starting, the touch screen display and output are normal. But as soon as a load is connected, the output stops immediately. | The UPS is severely overloaded or the output is short-circuited. Reduce the load or find the cause of the short circuit. A common cause is a short circuit in the output socket adapter, or an input short circuit after UPS damage; The loads were not switched on from the largest to the smallest. Restart the UPS and, once it runs steadily, switch on the largest load first and then the smaller ones in turn. |
| Buzzer gives a long beep, fault indicator on, UPS in bypass mode, inverter failed. | Output overload: the load exceeds the rated power of the UPS. Reduce the load or use a UPS with a higher rating. A temporary transfer to bypass caused by load inrush, with automatic recovery, is normal; UPS over-temperature protection. Check whether the air inlet or outlet of the UPS is blocked, or the operating temperature is outside the permitted range. |
| The UPS normally works correctly, but at a power failure it does not transfer to battery mode, or it transfers and soon reaches battery under-voltage protection. | Battery aged, capacity lost. Replace the batteries; Battery charger fault: the battery is not being charged; Battery cable loose or poor terminal contact. |
| With a PC as load everything works normally, but at a power failure the computer halts although the UPS works normally. | Poor earth connection: the voltage between the neutral and earth conductors is too high. |

**TABLE 5-2** Meaning of fault symbol and buzzer status

| NO. | Fault symbol | Buzzer status | Meaning |
|---|---|---|---|
| 1 | EPO | Long beep | Emergency power off active (if the EPO function is used): bypass output and inverter output are both switched off. |
| 2 | Mode fault | Long beep | The mode set on the screen does not match the actual wiring: check the mains and bypass wiring and set the matching mode. |
| 3 | Maintain bypass fault | Long beep | Maintenance bypass protection: inverter output switched off. Check that the maintenance-bypass detection port on the rear panel is shorted. |
| 4 | Output fault | Long beep | UPS output fault: check the output for a short circuit or overload. |
| 5 | Mode mismatch | Long beep | The input/output mode setting of this UPS does not match the rest of the parallel system. |
| 6 | Voltage mismatch | Long beep | The output voltage setting of this UPS does not match the rest of the parallel system. |
| 7 | Frequency mismatch | Long beep | The frequency setting of this UPS does not match the rest of the parallel system. |

**TABLE 5-2** Meaning of fault symbol and buzzer status *(continued)*

| NO. | Fault symbol | Buzzer status | Meaning |
|---|---|---|---|
| 8 | Bypass mismatch | Long beep | The bypass voltage or frequency setting of this UPS does not match the rest of the parallel system. |
| 9 | Pattern mismatch | Long beep | The parallel mode setting of this UPS does not match the rest of the parallel system. |
| 10 | Power mismatch | Long beep | The output power setting of this UPS does not match the rest of the parallel system. |
| 11 | Battery number mismatch | Long beep | The battery number setting of this UPS does not match the rest of the parallel system. |
| 12 | Parallel mismatch | Long beep | The parameter settings of this UPS do not match the rest of the parallel system. |
| 13 | Short mismatch | Long beep | The short-circuit transfer-to-bypass setting of this UPS does not match the rest of the parallel system. |
| 14 | Two-ended fault | Long beep | Parallel cable disconnected at both ends. |
| 15 | Single-ended fault | Slow beep | Parallel cable disconnected at one end. |
| 16 | Auxiliary power supply failure | Long beep | Internal auxiliary power supply failure. If it does not recover automatically, contact service promptly. |
| 17 | Fan failure | Urgent beep (alarm once about every 0.2s) | Fan fault warning: check the fans for damage or obstruction. |
| 18 | CAN fault | Slow beep (alarm once about every 2.0s) | CAN communication of the parallel system abnormal: check whether a parallel cable is damaged or whether only one UPS of the parallel system is running. |
| 19 | SCI fault | Long beep | Internal communication abnormal. If the alarm persists, contact service promptly. |
| 20 | There is no redundancy in the parallel UPS | Slow beep (alarm once about every 2.0s) | The total load of the parallel system exceeds the full load of a single UPS, so redundancy is lost: check the output load. |
| 21 | Main power abnormal | Long beep | Mains input phase sequence abnormal: check the mains input wiring. |
| 3 continuous alarms at 10s intervals | Mains input fault: missing neutral, power failure, over- or under-voltage, over- or under-frequency. Check the mains input. | | |
| 22 | Bypass abnormal | Slow beep (alarm once about every 2.0s) | In mains mode: bypass voltage, frequency or phase sequence abnormal, or the mode setting does not match the wiring. Check that the bypass breaker is closed, that the bypass phase sequence is correct and that the bypass wiring matches the mode setting. |

**TABLE 5-2** Meaning of fault symbol and buzzer status *(continued)*

| NO. | Fault symbol | Buzzer status | Meaning |
|---|---|---|---|
| 23 | Battery abnormal | Slow beep (alarm once about every 2.0s) | Battery over-voltage protection, charging fuse failure or over-voltage alarm: check the battery status. |
| | | Urgent beep (alarm once about every 0.2s) | Battery wiring fault, charger short circuit, under-voltage protection or under-voltage warning: check the battery wiring and the battery condition. |
| | | No buzzer warning | The battery charging temperature is too high. |
| 24 | Rectifier abnormal | Urgent beep (alarm once about every 0.2s) | UPS rectifier fault. |
| 25 | Inverter abnormal | Long beep | UPS inverter fault. |

**NOTE**

The buzzer patterns in the table apply when the UPS is on and the buzzer is not muted. When the UPS is off, or the buzzer is muted, alarms are shown on the touch screen only.

CHAPTER 6

# 06 Package, Transportation and Storage

IN THIS CHAPTER

6.1 Package
6.2 Transportation
6.3 Storage

## 6.1 Package

When packing, observe the orientation marks. The side of the package carries the "keep dry", "handle with care", "this way up" and other warning marks, and the device model. The device name is printed on the front of the package.

## 6.2 Transportation

During transport, observe the warning marks and avoid severe impacts on the package. Place the device in the marked orientation to avoid damaging components. Flammable, explosive or corrosive materials must not be shipped with the device. Do not leave the device outdoors during transit or intermediate storage. The device must not be exposed to rain, snow, liquids or mechanical damage.

## 6.3 Storage

Store the UPS in the marked orientation. Keep the package 200 mm above the floor and at least 500 mm from walls, heat sources, cold sources, windows and air inlets.

Storage temperature: -20 °C to 50 °C; relative humidity 20 % to 80 %. The warehouse must be free of flammable, explosive or corrosive materials and harmful gases, and of strong vibration, shocks and magnetic fields. Under these conditions the storage period is generally 6 months; after more than 6 months of storage the UPS must be checked again. For long-term storage, charge the battery every 3 months.

CHAPTER 7

# 07 Safety services and EN 50171

The CPSS7 is a central safety power supply system (CPS) to EN 50171:2021: it supplies essential safety equipment from its battery when the normal supply fails. This chapter gives what the standard requires, what the CPSS provides, and what the designer and the installer of the safety system provide.

IN THIS CHAPTER

7.1 What a CPSS supplies
7.2 Operating mode
7.3 What EN 50171 requires and what the CPSS provides
7.4 Settings for safety services
7.5 Battery, charger and rated operating time
7.6 Installing a safety source
7.7 Commissioning, periodic tests and log-book
7.8 Labels and documents

## 7.1 What a CPSS supplies

EN 50171 (Clause 1) covers central systems, permanently connected to an AC supply up to 1 000 V, with batteries as the alternative source. They supply:

- emergency escape lighting and safety signs;
- electric circuits of automatic fire-extinguishing installations;
- paging systems and signalling safety installations;
- smoke extraction equipment and carbon monoxide warning systems;
- special safety installations of specific buildings, e.g. high-risk areas.

> **NOTE**
> A CPS is dedicated to essential safety equipment: do not connect general loads such as IT or industrial equipment. Power supplies of fire-alarm systems are covered by EN 54, not by EN 50171.

## 7.2 Operating mode

EN 50171 (4.1) defines two modes: the changeover mode, with a response time of no more than 0.5 s, and the mode without interruption, where the supply is permanent and there is no response time. The CPSS7 is an online double-conversion system and works in the mode without interruption (4.3): the safety loads are always on the inverter, the battery is kept charged, and when the normal supply fails the battery takes over with no break.

> **WARNING**
> Keep the CPSS7 in online (inverter) mode. Do not enable ECO mode (Section 4.5.1): in ECO mode the safety loads run on the bypass, and the inverter takes over only after a transfer.
>
> In battery operation the bypass is not available: the inverter alone must supply the starting currents of the loads and clear faults on the outgoing circuits (Section 7.6).

## 7.3 What EN 50171 requires and what the CPSS provides

The table follows the clauses of EN 50171:2021 that concern the CPSS itself. The CPSS is designed to meet these requirements; the installation requirements are in Sections 7.5 to 7.8.

**TABLE 7-1** EN 50171:2021 requirements and the CPSS7

| Requirement | Clause | CPSS7 |
|---|---|---|
| Mode without interruption: load permanently supplied, no changeover time | 4.1, 4.3 | Online double conversion; battery takes over with no break (0 ms). Keep ECO mode off. |
| Inverter withstands 120 % of the load continuously for the rated operating time | 6.6.3 | Constant overload up to 120 % of the rated power (Appendix A). |
| Total harmonic distortion of the output ≤ 5 % on linear load | 6.6.4 | ≤ 2 % (CPSS7-10, -20), ≤ 1 % (CPSS7-30, -40), resistive full load |
| Output frequency within ± 2 % of the nominal frequency | 6.6.5 | 50 or 60 Hz ± 0.1 Hz in battery mode. |
| Charger recharges the discharged battery to at least 80 % of the rated operating time in 12 h | 6.3.3 | Recharge from low battery in under 12 h, with the battery sized to the charger: maximum charge current 1–10 A (CPSS7-10 and -20) and 1–20 A (CPSS7-30 and -40). Check the battery size in Section 7.5. |
| Charging characteristic set to the battery; temperature compensation where the battery maker requires it | 6.3.2, 6.3.5 | Float and equalising voltages, charge current and temperature compensation set on the touch screen (Section 4.5.2). |
| Deep discharge protection at the battery maker's minimum voltage, with indication on the control panel | 5.1 e), 6.7 | Audible and visual alarm, then the inverter stops at the end-of-discharge point (Section 2.2.2); low-voltage protection settable 1.667–1.867 V/cell. Charging restarts by itself when the normal supply returns. |
| Measurement of battery voltage, battery current and load | 6.8.1 | Touch screen: battery and output information pages (Section 4.2.5). |
| Indication of the supply source and of the faults (charger, battery circuit, deep discharge) | 6.8.2 c) d) | Working status and alarms on the display (Section 4.2.2), history record with time stamp (Section 4.4.2). |
| Remote indication by potential-free contacts: ready to operate, supply from battery, system fault | 6.8.2 e) | The output dry contacts OUT.1 to OUT.5 (Table 2-7): assign “Normal operation”, “Battery operation” and “General abnormal” (Section 7.4). |
| Device to disable the charger during the duration test, not accessible without a tool, key or code | 6.8.2 b) | The input dry contact IN.1 set to “Charge disabled” (Table 2-6), wired to a key switch (Section 7.4). |
| Device with automatic reset to simulate a failure of the normal supply | 6.8.2 a) | Provided in the installation: a test push-button that opens the normal supply of the CPSS (Section 7.6). |
| Enclosure IP 20 at least, resistant to heat and fire (metal enclosures are deemed to comply) | 6.2.2, 6.2.3 | Metal enclosure, IP20 (Appendix A). |
| Batteries with a design life of at least 10 years at 20 °C | 6.13 | Batteries with 10–12 years expected life (AEC data). Batteries supplied by others must have the same design life. |
| Battery enclosures and rooms to EN IEC 62485-2 | 6.1, 6.2.8, 7.4 | AEC battery cabinets; ventilation of the room or cabinet: Section 7.6. |

## 7.4 Settings for safety services

Make these settings at commissioning, after the start-up of chapter 5, and write them in the log-book (Section 7.7).

PROCEDURE

1. **Online mode.** ECO mode Off (Section 4.5.1).

2. **Battery data.** Battery type, capacity (Ah) and number of cells as installed (Section 4.5.2).
3. **End of discharge.** Low-voltage protection at the battery maker's minimum voltage for the rated operating time. EN 50171 (6.7, note) gives 1.6 V/cell as a typical value for lead-acid batteries.
4. **Charge current.** The value that recharges the battery to EN 50171 (Section 7.5), within the battery maker's limit and the charger maximum of 1–10 A (CPSS7-10 and -20) and 1–20 A (CPSS7-30 and -40).
5. **Temperature compensation.** Temperature compensation On, coefficient from the battery maker (battery temperature sensor).
6. **Remote indications.** On the output dry contacts OUT.1 to OUT.5 (Table 2-7), assign "Normal operation" (ready to operate), "Battery operation" (supply from battery) and "General abnormal" (system fault), and wire them to the safety panel (Section 4.5.4). For the fault indication use the contact that opens on fault (closed-circuit principle, preferred by EN 50171, 6.8.2 e).
7. **Charger off for the duration test.** Set the input dry contact IN.1 set to "Charge disabled" (Table 2-6) and wire it to a key switch, so that the charger can be disabled only with the key.
8. **Battery breaker.** Keep it closed: the CPSS must be ready at all times. Open it only for maintenance. The advice of the platform chapters to open the battery breaker when the UPS is not in use does not apply to a CPSS.

## 7.5 Battery, charger and rated operating time

The rated operating time (autonomy) is set by the fire-safety design of the building and the national rules, not by the CPSS. EN 1838 asks at least 1 h for escape-route lighting; 3 h is common where the building stays occupied after a failure of the normal supply. EN 50171 (5.2) lists what the user gives the manufacturer to size the system:

- type and value of the supply voltage and of the output voltage;
- load profile over the rated operating time, and the division into maintained and non-maintained loads;
- permissible changeover time and the rated operating time required;
- type and intended position of the battery, system configuration, ambient temperature and humidity.

AEC sizes the battery of each CPSS on these data. The charger must then recharge it to 80 % of the rated operating time in 12 h (EN 50171, 6.3.3). As a reference value, the standard gives 10 A of charge current for a 100 Ah battery (6.3.3, note 1). Table 7-2 gives the battery capacity that matches the charger of each model at that reference; for a larger battery ask AEC to verify the recharge.

**TABLE 7-2** Charger and battery capacity at the EN 50171 reference value (10 A per 100 Ah)

| Model | Maximum charge current | Battery capacity at the reference |
|---|---|---|
| CPSS7-10 · CPSS7-20 | 10 A | 100 Ah |
| CPSS7-30 · CPSS7-40 | 20 A | 200 Ah |

> **NOTE**
> Battery life and capacity depend strongly on temperature (EN 50171, 5.1, note 1): the 10-year design life is given at 20 °C. Keep the batteries at about 20 °C.

## 7.6 Installing a safety source

The installation of the safety system is the responsibility of its designer and installer. In addition to chapter 3, HD 60364-5-56:2018 (in Italy CEI 64-8, Part 5-56) and the national fire-safety rules apply:

#### LOCATION

- Install the CPSS and its batteries as fixed equipment, in a suitable location: a constructional enclosure or a separate fire-protected compartment or room that keeps them working in a fire (560.3.18, 560.6.2, 560.6.3). The fire resistance is set by the fire-safety design.
- The location is accessible only to skilled or instructed persons, segregated from other sources, and protected from fire, flooding, freezing and vandalism (560.6.3).

#### VENTILATION

- Ventilate the location so that fumes from the safety source cannot reach occupied areas (560.6.4), and remove the heat of the CPSS given in chapter 3.
- Ventilate the battery room or cabinet to EN IEC 62485-2 (EN 50171, 6.1 and 7.4). For lead-acid batteries the airflow is $Q = 0.05 \times n \times I_{gas} \times C_{rt} \times 10^{-3}$ m³/h, with n the number of cells, $C_{rt}$ the rated capacity in Ah and $I_{gas}$ in mA per Ah (for VRLA batteries 1 on float charge and 8 on boost charge). Use the battery maker's values.

#### CABLES AND PROTECTIVE DEVICES

- Circuits of safety services that must work in a fire: fire-resistant cables to the IEC 60331 series and IEC 60332-1-2, mineral-insulated cables, or a wiring system with the same fire protection (560.8.1), for the duration required by the design. Do not run them through locations with fire risk unless they are fire-resistant (560.7.2), and keep them separate from other circuits.
- Do not protect circuits of safety services with RCDs or AFDDs (560.7.13).
- The inverter must trip the protective device of a faulty outgoing circuit without shutting down (EN 50171, 6.6.8). Choose the protective devices of the final circuits with AEC, for operation from the battery without the bypass, and make them selective, so that a fault on one circuit leaves the others supplied (560.7.4).
- Provide in the supply switchboard a test push-button with automatic reset that opens the normal supply of the CPSS, to simulate a failure of the normal supply (EN 50171, 6.8.2 a).
- Identify the switchgear of the safety services clearly and group it in locations accessible only to skilled or instructed persons (560.7.5).

## 7.7 Commissioning, periodic tests and log-book

Before commissioning, the installation is verified (EN 50171, Clause 8; HD 60364-6). For emergency escape lighting, EN 50172:2024 sets the periodic tests and asks that each result is recorded in the log-book kept for the system; in Italy UNI 11222 gives the verification and maintenance procedures. The CPSS7 keeps its own records (history record, Section 4.4.2; user log, Section 4.4.3), which help, but do not replace the log-book.

**TABLE 7-3** Periodic tests

| When | What | Reference |
|---|---|---|
| Every day | The display and the remote indications show normal operation, without alarms. | EN 50172, 7.4 |
| Every month | Simulate a failure of the normal supply (test push-button) long enough to check every luminaire and sign; check the monitoring of the CPSS; record date and result. | EN 50172, 7.4.3 |
| Every year | Full rated-duration test with the charger disabled; at the end, restore the normal supply and check the indicators; record the battery voltage at the end, date and result. | EN 50172, 7.4.4 |
| As the platform requires | Preventive maintenance and battery maintenance of the CPSS (Section 5.5, Section 5.6). | this manual |

**CAUTION**

After the annual test the battery is discharged and needs up to 12 h to recover 80 % of its autonomy. Plan the test when the building can do without the full autonomy, as the fire-safety design allows.

**TABLE 7-4** Log-book (copy this page)

| Date | Test | Duration (min) | Battery voltage at the end (V) | Alarms, faults, actions | Name and signature |
|---|---|---|---|---|---|
| | | | | | |
| | | | | | |
| | | | | | |
| | | | | | |
| | | | | | |
| | | | | | |
| | | | | | |
| | | | | | |

## 7.8 Labels and documents

- Keep the rating label and the warning labels of the CPSS clean and readable (EN 50171, 6.14 and 6.15). Do not cover them with other labels.
- Label the CPSS, its supply switchboard and its outgoing circuits as part of the safety services, as the design of the safety system requires (560.7.5).
- Keep with the CPSS: this manual, the battery data, the settings made at commissioning, the wiring diagram of the safety circuits and the log-book (EN 50171, Clause 7).

APPENDIX A

# A Technical Specifications

| Item | CPSS7-10 | CPSS7-20 | CPSS7-30 | CPSS7-40 |
|---|---|---|---|---|
| Rated power (kVA) | 10 | 20 | 30 | 40 |
| Rated active power (kW), PF 0.8 | 8 | 16 | 24 | 32 |
| Overload | constant up to 120 % of the rated power (EN 50171, 6.6.3) | | | |
| Input | 3W+N+PE (can be set to 1W+N+PE) | | | |
| Input voltage | 176–280 V L-N: full power; 80–176 V L-N: power derated linearly | | | |
| Input frequency | 39.5–70.5 Hz | | | |
| Input power factor · THDi | ≥ 0.99 · ≤ 3 % (resistive full load) | | | |
| Battery voltage | ±96 … ±240 V DC | ±144 … ±240 V DC | | |
| Charge current | 1–10 A settable | | 1–20 A settable | |
| Battery life · recharge | 10–12 years expected life · recharge from low battery < 12 h | | | |
| Output voltage | 220 / 230 / 240 V L-N (default 230); 380 / 400 / 415 V L-L (default 400) | | | |
| Output frequency (battery mode) | 50 ± 0.1 Hz or 60 ± 0. | | | |
| Output voltage distortion | resistive ≤ 2 %; non-linear ≤ 4 % | | resistive ≤ 1 %; non-linear ≤ 4 % | |
| Efficiency | up to 96 % (double conversion) | | | |
| Mode | online double conversion, mode without interruption (EN 50171, 4.3); ECO mode not to be used | | | |
| Communication | RS485, dry contacts OUT.1–OUT.5, input dry contacts (EPO, IN.1); optional SNMP card, dry-contact kit, protocol transfer kit | | | |
| Noise · temperature · humidity | < 55 dB (25 °C) · −5 … 40 °C · 0–95 % non-condensing | | | |
| Enclosure | metal, IP20 | | | |
| W × D × H | 250 × 806 × 880 mm | | 300 × 842 × 1250 mm | |
| Standards | CE · EN 50171 · safety EN 62040-1 · EMC EN 62040-2 · classification EN 62040-3 | | | |

Platform data from the AEC IST7 10–40 kVA user manual rev. 01; CPSS ratings, overload, battery life and recharge from the AEC UPS Catalogue EMEA 2026. Specifications are subject to change without prior notice.

## Dimensions and weights

Overall dimensions in millimetres (W × D × H) and net weights, from the technical data of this manual. Leave the clearances given in the installation chapter around the UPS.

### CPSS7-10 · CPSS7-20

tower, IST7 10–20 kVA frame



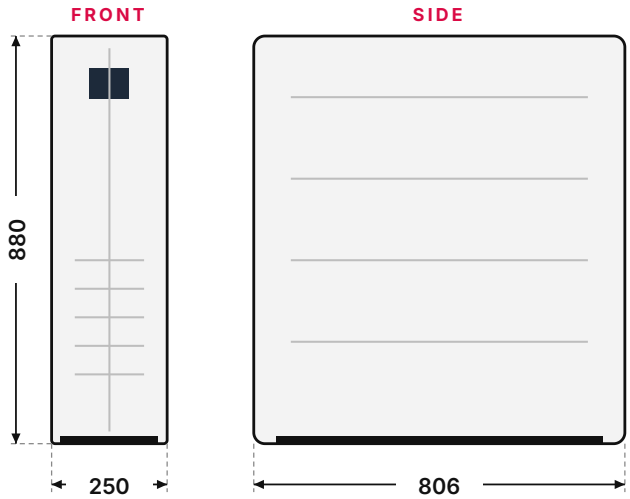


| | |
|---|---|
| W × D × H | 250 × 806 × 880 mm |
| without internal batteries | 64 kg |
| CPSS7-10 with internal batteries | 95 kg |
| CPSS7-20 with internal batteries | 137.6 kg |

### CPSS7-30 · CPSS7-40

tower, IST7 30–40 kVA frame



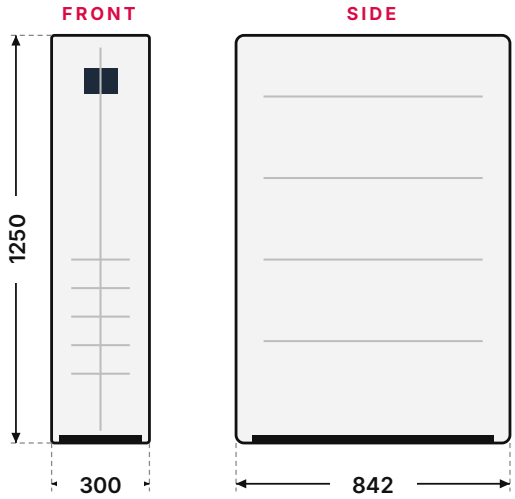


| | |
|---|---|
| W × D × H | 300 × 842 × 1250 mm |
| without internal batteries | 102.5 kg |
| with internal batteries | 249.7 kg |

APPENDIX B

# B Acronyms and Abbreviations

| Acronym | Meaning |
|---|---|
| AC | Alternating Current |
| BB | Battery Breaker |
| BMD | Bypass Maintain Detection |
| DC | Direct Current |
| ECO | Economic Operation Mode |
| EPO | Emergency Power Off |
| HMI | Human-Machine Interface |
| IEC | International Electrotechnical Commission |
| IGBT | Insulated-Gate Bipolar Transistor |
| MBB | Maintenance Bypass Breaker |
| NC | Normally Closed (contact) |
| PE | Protective Earthing |
| PF | Power Factor |
| PFC | Power Factor Correction |
| RS232 | Recommended Standard 232 (serial port) |
| RS485 | Recommended Standard 485 |
| SNMP | Simple Network Management |
| UPS | Uninterruptible Power System |
| USB | Universal Serial Bus |

# More on the AEC partner portal

PARTNER PORTAL

**portal.emea.aecups.com**

- 3D models of every UPS
- Diagrams and drawings
- Video tutorials
- Manuals and catalogues, always up to date

WHATSAPP SUPPORT

**+39 393 080 5211**

Technical support 24/7. Scan the code to write to AEC service.

**AEC International Srl**
Via Nerviano 55 · 20045 Lainate (MI) · Italy

Sales +39 02 9415 8991 · info@aecups.com
Service +39 393 080 5211 · service@aecups.com