ONLINE UPS · THREE-PHASE 208/120 V · LITHIUM

ETHERNO

10–30 kVA

Three-phase online double-conversion UPS with hot-swappable 50 Ah lithium iron phosphate (LiFePO4) battery modules and a 4.3-inch color touchscreen.

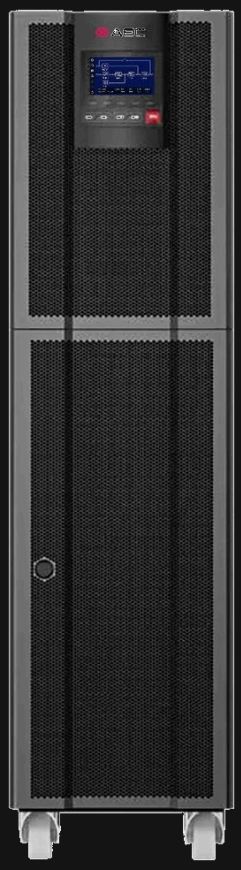

User Manual

Installation · Operation · Maintenance

ETHERNO 10K | ETHERNO 20K | ETHERNO 30K

COPYRIGHT AND NOTICES

Copyright © 2026 AEC UPS USA LLC. All rights reserved. No part of this document may be reproduced or transmitted in any form or by any means without the prior written consent of AEC UPS USA LLC.

Trademarks. AEC and ETHERNO are trademarks of AEC UPS USA LLC. All other trademarks and trade names mentioned in this document are the property of their respective owners.

Notice. The products, services and features you purchase are defined by the contract between AEC and the customer; some of those described in this document may not be included in your purchase or use. Unless the contract says otherwise, all statements, information and recommendations in this document are provided “as is”, without warranties, guarantees or representations of any kind, express or implied. The information in this document may change without notice. Every effort has been made to ensure its accuracy, but nothing in it constitutes a warranty of any kind, express or implied. The illustrations are for reference: the actual product may differ slightly.

AEC UPS USA LLC
4872 SW 72nd Ave, Miami, FL 33155
Technical support, 24/7 · phone and WhatsApp: **+1 786 553 2100**
service.us@aecups.com · sales@aecups.com · aecups.com

AEC-UM-ETH-US · Rev. B · November 2026. Rev. B adds call-out pictures for every panel, port, breaker state and display screen used in the procedures, sizes the breakers and conductors to the NEC, makes the lithium battery text consistent, fixes the runtime example, fault list and specification notes, and adds the FCC statement.

BEFORE YOU START

About this manual

Thank you for choosing an AEC ETHERNO UPS. This manual describes the ETHERNO 10–30 kVA three-phase online UPS with lithium battery modules: safety, the product and its panels, planning, installation, the touchscreen, operation, network monitoring, maintenance, transport and storage, and the specifications. Read it before you start, and keep it near the UPS.

MODELS COVERED

ETHERNO 10K (10 kVA / 10 kW), 20K (20 kVA / 20 kW) and 30K (30 kVA / 30 kW), three-phase 208/120 V, 4-wire, with one to three 50 Ah lithium modules. Ordering codes: Table 2-1.

WHO THIS MANUAL IS FOR

Qualified electricians install and wire the UPS. Trained operators use it every day. Only authorized personnel change the settings on the touchscreen.

Safety messages

Safety messages in this manual follow ANSI Z535.6. The signal word tells how serious the hazard is:

DANGER	A hazardous situation which, if not avoided, **will** result in death or serious injury.
WARNING	A hazardous situation which, if not avoided, **could** result in death or serious injury.
CAUTION	A hazardous situation which, if not avoided, could result in minor or moderate injury.
NOTICE	Information about practices that could damage the equipment, lose data, reduce performance or give unexpected results — not related to injury.

Other conventions

i NOTE Additional information that stresses or completes the text.

✓ TIP A hint that helps you solve a problem or save time.

Keys are shown like [ON]; menus like **Settings › Battery**. Numbers in red circles on a picture are explained in the list under it. Cross-references in red are links in the PDF.

QUICK START

Up and running in seven steps

The short version — each step points to the full instructions. Read the safety chapter first.

1. **Plan the site.** Indoors, 32–104 °F (0–40 °C), at least 12 in (300 mm) free behind and beside the UPS, floor rated for the weight. Section 4.3, page 24.
2. **Size the protection** to the NEC: breakers and conductors for input, bypass and output. Section 4.4, page 25.
3. **Unpack and place the UPS** with a forklift or pallet jack, anchor it and lower the leveling feet. Section 4.5, page 28, Section 4.6, page 29.
4. **Install the lithium modules** from the bottom bay up. Section 4.7, page 31.
5. **Wire it:** ground first, then input, bypass and output on the terminal block. Section 4.8.2, page 35.
6. **Check** the wiring and the neutral-to-ground voltage (below 5 V AC). Section 6.1, page 57.
7. **Start:** close the input and bypass breakers, lock every module knob, press both ON keys for 1 s, set the module quantity. Section 6.2, page 57.

3-level	50 Ah	4.3 in	5 years
IGBT inverter, up to 94 % efficiency	hot-swappable LiFePO4 modules, 1 to 3 per UPS	color touchscreen	warranty, UPS and lithium modules

CONTENTS

Contents

1 Safety 7
1.1 General 7
1.2 Operation and maintenance safety 8
1.3 Operating environment 8
1.4 Standards 9

2 Product overview 10
2.1 Introduction 10
2.2 Models and ordering codes 10
2.3 Key features 10
2.4 How ETHERNO is built 11
2.5 Front view 12
2.6 Operation panel 13
2.7 Rear panel 14
2.8 Lithium battery module 15
2.9 Communication 17
2.10 How ETHERNO works 20

3 Planning the installation 23
3.1 Sizing the load 23
3.2 Estimating the runtime 23
3.3 Running on a generator 23

4 Installation 24
4.1 Before you install 24
4.2 Tools 24
4.3 Site and space 24
4.4 Breakers and cables 25
4.5 Transport and unpacking 28
4.6 Mounting the UPS 29
4.7 Installing the battery modules 31
4.8 Electrical connection 33

5 Touchscreen operation 40
5.1 Menu structure 40
5.2 Main page 41
5.3 Login 44
5.4 Information management 45
5.5 Settings 46
5.6 Current faults 55
5.7 Buzzer 55
5.8 Turning on and off from the touchscreen 56

6 Operation 57
6.1 Before starting 57
6.2 Starting the UPS 57
6.3 Shutting down the UPS 58
6.4 Maintenance bypass 59
6.5 Cold start from the battery 60
6.6 Emergency power off (EPO) 60

6.7 Parallel system 61

7 Network monitoring 62
7.1 The SNMP-L card 62
7.2 AEC monitoring software 62

8 Maintenance 63
8.1 Maintenance safety 63
8.2 Preventive maintenance 63
8.3 Component life 63
8.4 Care of the lithium modules 64
8.5 Replacing a module 64

9 Troubleshooting 65
9.1 Common problems 65
9.2 Fault messages and buzzer signals 66

10 Packaging, transport and storage 68
10.1 Packaging 68
10.2 Transport 68
10.3 Storage 68

A Technical specifications 69

B Runtime 71

C Drawings 72

D Acronyms and abbreviations 78

E Frequently asked questions 79

F Installation record 80

CHAPTER 1

01 Safety

Read this chapter before you install, operate or service the UPS. Safety messages also appear in the chapters where each task is described.

⚠ WARNING · IMPORTANT SAFETY INSTRUCTIONS — SAVE THESE INSTRUCTIONS

This manual contains important instructions for the ETHERNO 10–30 kVA UPS and its lithium battery modules. Follow them during installation, operation and maintenance.

1.1 General

Follow all instructions and observe every DANGER, WARNING and CAUTION message in this manual and on the unit. These messages add to — they do not replace — the electrical codes and safety rules in force where the UPS is installed (in the US, the National Electrical Code, NFPA 70, and local requirements).

NOTICE

AEC accepts no liability for damage caused by failing to follow general safety practice or the safety standards for the design, manufacture and use of the equipment.

1.1.1 Electrical safety

⚠ DANGER

Hazardous voltage and high temperature inside. Comply strictly with all warnings and instructions on the UPS and in this manual.

⚠ WARNING

- In case of fire, use an extinguisher suitable for lithium-ion battery systems. Do not use water or another liquid extinguisher on live equipment: it can cause electric shock.
- Do not let liquids or foreign objects enter the UPS.
- The UPS must be properly grounded.

NOTICE

This UPS is intended for commercial and industrial use. In a residential environment it may cause radio interference; the user must then take measures to prevent it (see Section 1.4.1).

1.1.2 Battery safety

⚠ CAUTION

Before use, make sure the charging voltage of the lithium battery system matches the UPS it is connected to. If in doubt, contact AEC.

⚠ WARNING

- Only authorized, qualified personnel may replace battery modules. Remove watches, bracelets, rings and other conductive objects. Wear rubber-soled shoes and gloves, and use tools with insulated handles.
- Do not place tools or other conductive objects on the battery.
- Never short-circuit the battery terminals or connect them with reversed polarity: this can cause fire or electric shock.
- Use only AEC ETHERNO lithium modules (ETH-50-LI). Do not mix them with other batteries.
- Keep the battery away from flames and from electrical equipment that can produce sparks.
- Do not open or damage a module. The cells contain hazardous substances that harm skin and eyes. If you touch them, rinse at once with plenty of water and get medical attention.
- Dispose of used modules according to local regulations.

1.1.3 Electrostatic discharge (ESD)

⚠ CAUTION

Static electricity from the human body can damage sensitive components on the circuit boards. Before you touch them, wear an anti-static wrist strap with its other end properly grounded.

1.2 Operation and maintenance safety

⚠ DANGER

- Only authorized, qualified personnel may open the UPS cabinet. Opening it can cause electric shock, and damage caused by unauthorized opening is not covered by the warranty.
- Before you move, rewire or service the UPS, disconnect every power source — AC input, bypass and battery — so the UPS is isolated. Wait at least 10 minutes after it is fully off before you work on it: the output can still be live.
- When you remove a fan, keep fingers and tools away from the moving blades.

1.3 Operating environment

⚠ DANGER

- Do not install or operate the UPS where flammable or explosive gas or smoke is present.
- Keep the UPS out of direct sunlight, rain and damp locations.
- Never install the UPS where conductive (metallic) dust is present.

- Operating temperature: 32–104 °F (0–40 °C); relative humidity 0–95 %, non-condensing. Recommended: 68–77 °F (20–25 °C), about 50 % relative humidity.
- Place the UPS on a flat floor, free from vibration, tilted no more than 5°.
- Keep it well ventilated: leave 12–20 in (300–500 mm) between the rear or sides of the UPS and walls or other equipment. Poor ventilation raises the internal temperature and shortens the life of the components and of the UPS.
- Altitude: up to 6,560 ft (2,000 m).
- Do not install the UPS outdoors, or where there is dust, volatile gas, corrosive material or high salinity.
- The location must also meet the conditions of the lithium battery modules.

i NOTE The battery works best at 68–86 °F (20–30 °C). Above 86 °F (30 °C) its life is shorter; below 68 °F (20 °C) its runtime is shorter.

1.4 Standards

The UPS is listed to UL 1778 (UL certificate E543003). Its 50 Ah lithium battery modules are listed (file number pending). The UPS is designed according to the following standards.

TABLE 1-1 Design standards

Standard	Subject
UL 1778	Uninterruptible power systems — safety (North America); listed, UL certificate E543003
IEC 62040-1	UPS — general and safety requirements
IEC 62040-2	UPS — electromagnetic compatibility (EMC)
IEC 62040-3	UPS — performance and test requirements
IEC 61000-3-12	Harmonic currents, equipment of 16 A to 75 A per phase
IEC 61000-3-11	Voltage fluctuations and flicker
IEC 61000-4-2	Immunity to electrostatic discharge
IEC 61000-4-3	Immunity to radiated electromagnetic fields
IEC 61000-4-4	Immunity to electrical fast transients / bursts
IEC 61000-4-5	Immunity to surges
IEC 61000-4-6	Immunity to conducted disturbances
IEC 61000-4-8	Immunity to power-frequency magnetic fields
IEC 63000	Restriction of hazardous substances (RoHS) — technical documentation
UL 1973 · UL 9540A · UN 38.3	Lithium battery modules: listing (file number pending), fire test, transport test (Table A-2)
NFPA 70 (NEC)	Installation: branch circuits, conductors, overcurrent protection, working space

1.4.1 FCC statement

This equipment has been tested and found to comply with the limits for a Class A digital device, pursuant to Part 15 of the FCC Rules. These limits are designed to provide reasonable protection against harmful interference when the equipment is operated in a commercial environment. This equipment generates, uses and can radiate radio-frequency energy and, if not installed and used in accordance with this manual, may cause harmful interference to radio communications. Operation of this equipment in a residential area is likely to cause harmful interference, in which case the user will be required to correct the interference at his own expense.

CHAPTER 2

02 Product overview

What ETHERNO is, the models, the front, the operation panel, the rear panel, the lithium battery modules, the communication ports and how the UPS works.

2.1 Introduction

ETHERNO is a high-frequency, online double-conversion three-phase UPS with intelligent control and hot-swappable lithium iron phosphate (LiFePO4) battery modules. It protects file and enterprise servers, workstations, network and telecom equipment, data centers and other loads that need clean, continuous power — in finance, networks, trading, oil and gas, industry, utilities and automotive. ETHERNO has a three-phase input and a three-phase output (3-in / 3-out), 208/120 V, 4-wire.

2.2 Models and ordering codes

The UPS frame is ordered with or without battery modules. Each 50 Ah module (ETH-50-LI) weighs 81.6 lb (37 kg); a frame holds up to three.

TABLE 2-1 ETHERNO models and ordering codes

Model	Rating	Frame (no modules)	Factory configurations with lithium modules
ETHERNO 10K	10 kVA / 10 kW	ETH10	ETH10-1X50A-LI (1 module) · ETH10-2X50A-LI (2) · ETH10-3X50A-LI (3)
ETHERNO 20K	20 kVA / 20 kW	ETH20	ETH20-2X50A-LI (2 modules) · ETH20-3X50A-LI (3)
ETHERNO 30K	30 kVA / 30 kW	ETH30	ETH30-3X50A-LI (3 modules)
Battery module	50 Ah LiFePO4	ETH-50-LI	Hot-swappable; the same module as the AEC L6 lithium cabinet
Parallel kit	—	PAR-KIT-ETH	Connects ETHERNO units in parallel (Section 2.9.4)
Network card	—	SNMP-L	Puts the UPS on the network (Chapter 7)

How to read the code. ETH20-3X50A-LI means: ETHERNO (ETH), 20 kVA frame (20), three 50 Ah modules (3X50A), lithium (LI). The rating in kVA equals the rating in kW (output power factor 1).

2.3 Key features

TABLE 2-2 Key features

Feature	What it gives you
Fully digital control	The UPS detects the utility frequency and adapts to it. The output voltage can be set to 190, 200, 208 or 220 V line-to-line.
High efficiency	Three-level inverter and PFC control: clean output waveform, up to 94 % efficiency and an input power factor of 0.99 or more.
Smart fan control	Fan speed follows the load: longer fan life, less noise.
ECO mode	With good utility power the load runs from the bypass at up to 98 % efficiency; if the bypass leaves its window, the UPS transfers to the inverter.

Feature	What it gives you
Wide input window	At light load the UPS stays on utility power down to 70 V line-to-neutral without using the battery, so the battery stays fully charged and is cycled less.
Hot-swappable lithium	50 Ah LiFePO4 modules slide in from the front; one to three per UPS, each with its own indicators and knob.

2.4 How ETHERNO is built

Figure 2-1 and Figure 2-2 show the main parts of the UPS, from the AEC 3D model of the 30K with three modules. The touchscreen and the operation panel are at the top of the front, the lithium modules behind the front door, the breakers, ports and the AC terminal block at the rear, in the wiring box.

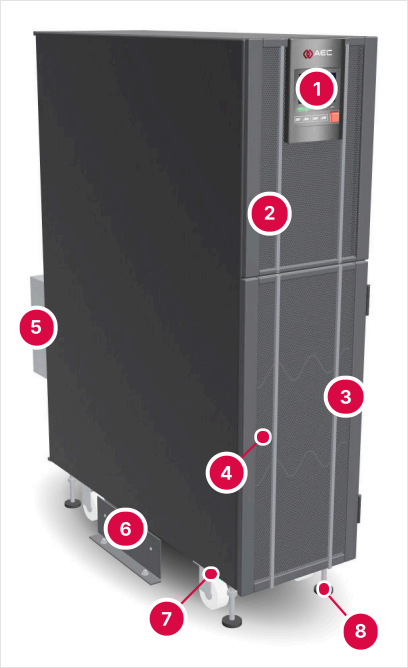

1. Touchscreen and operation panel (Section 2.6)
2. Upper front grille: cooling air in
3. Front door of the battery compartment
4. Door lock
5. Wiring box at the rear (Section 4.8.1)
6. Support plate (anchoring bracket)
7. Caster
8. Leveling foot

FIGURE 2-1 ETHERNO 30K, door closed — illustration from the AEC 3D model

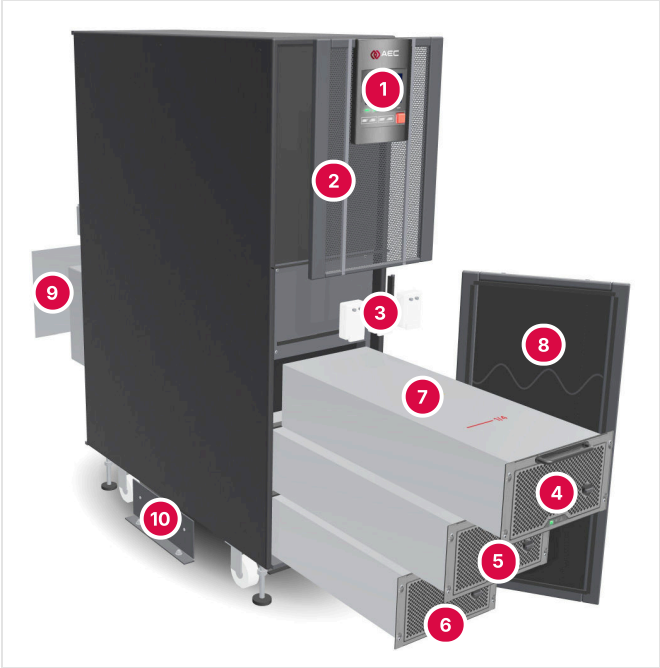

1. Touchscreen and operation panel
2. Front panel with the upper grille
3. Battery plug-ins, one per module bay
4. Module in bay 3 (top)
5. Module in bay 2
6. Module in bay 1 (bottom), the first module
7. Position marks: yellow 1/2, red 1/4 (Section 2.8)
8. Front door, open
9. Wiring box and wiring cover (rear)
10. Support plate

FIGURE 2-2 Exploded view: door open, the three modules pulled out, the front panel and the wiring cover moved apart — illustration, internal layout simplified

The modules are pulled out here only to show the parts: install and remove them as in Section 4.7 and Section 8.5.

2.5 Front view

The touchscreen and the operation panel are at the top of the front. The battery compartment is behind the lockable front door: the three battery plug-ins at the top, then three module bays.



1. Operation panel: touchscreen, indicators, keys (Section 2.6)
2. Upper front grille: cooling air in
3. Front door of the battery compartment
4. Door lock (key supplied)
5. Casters
6. Battery plug-ins, one per module bay
7. Bay 1 (bottom): the first module
8. Bay 2
9. Bay 3 (top)
10. Module knob (Section 2.8)
11. Module indicators
12. Front door, open

FIGURE 2-3 Front, door closed (left) and door open with three modules installed (right)

2.6 Operation panel

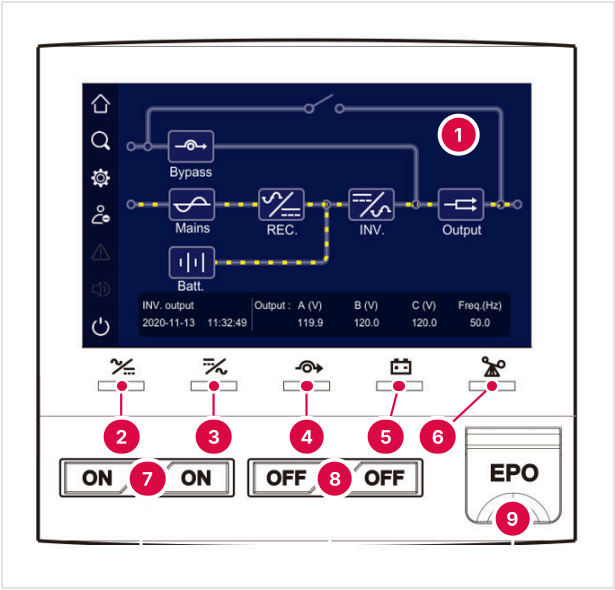

1. Touchscreen, 4.3-inch color (Chapter 5)
2. AC/DC indicator (rectifier)
3. DC/AC indicator (inverter)
4. BYP. indicator (bypass)
5. BATT. LOW indicator
6. OVERLOAD indicator
7. ON keys (press both)
8. OFF keys (press both)
9. EPO button (emergency power off)

FIGURE 2-4 Operation panel under the touchscreen

TABLE 2-3 Operation panel

No.	Name	Function
1	Touchscreen	Shows the operating status and the settings of the system.
2	AC/DC indicator	Green: rectifier normal. Red: rectifier fault.
3	DC/AC indicator	Green: inverter normal. Red: inverter fault.
4	BYP. indicator	Green: load on bypass. Red: bypass fault.
5	BATT. LOW indicator	Red: battery low.
6	OVERLOAD indicator	Red: output overload, or overload protection active.
7	ON keys (two)	Press both ON keys together for 1 s to turn the UPS on.
8	OFF keys (two)	Press both OFF keys together for 1 s to turn the UPS off.
9	EPO	Press to cut the UPS output immediately (Section 6.6).

2.7 Rear panel

The rear panel holds the communication ports, the four breakers and the AC terminal block behind the wiring cover. Each breaker is labeled on the panel (INPUT, BYPASS, OUTPUT, MAINTENANCE) and is ON with the lever up.

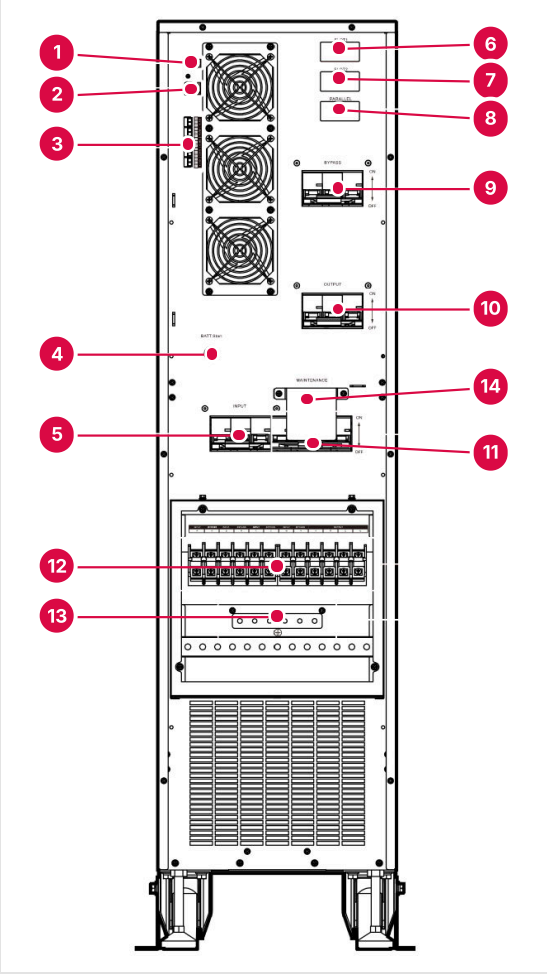

1. RS-485 port, A / B (Section 2.9.2)
2. EPO + input dry contact IN.1 (Section 2.9.3)
3. Output dry contacts OUT.1–OUT.5
4. BATT. Start button (cold start, Section 6.5)
5. INPUT breaker (utility input)
6. Intelligent slot 1 (SLOT1)
7. Intelligent slot 2 (SLOT2)
8. Parallel port (PARALLEL)
9. BYPASS breaker
10. OUTPUT breaker
11. MAINTENANCE bypass breaker, behind its cover
12. AC terminal block (Section 4.8.1)
13. PE (ground) bar
14. Maintenance-bypass cover (door switch behind it)

FIGURE 2-5 Rear panel (wiring cover removed)

TABLE 2-4 Rear panel connections

No.	Item	No.	Item
1	RS-485 port	8	Parallel port
2	EPO + input dry contact	9	Bypass breaker
3	Output dry contacts	10	Output breaker
4	BATT. Start button	11	Maintenance bypass breaker
5	Input breaker	12	AC wiring terminals
6	Intelligent slot 1	13	PE (ground)
7	Intelligent slot 2	14	Maintenance-bypass cover

i NOTE A door switch behind the maintenance-bypass cover opens when the cover is removed and closes again when the cover is refitted. With the cover removed, the UPS turns its inverter off and transfers the load to bypass. The procedures that use the cover and the breakers are in Section 6.4.

The BATT. Start button starts the UPS from the battery when there is no utility power: see Section 6.5.

2.8 Lithium battery module

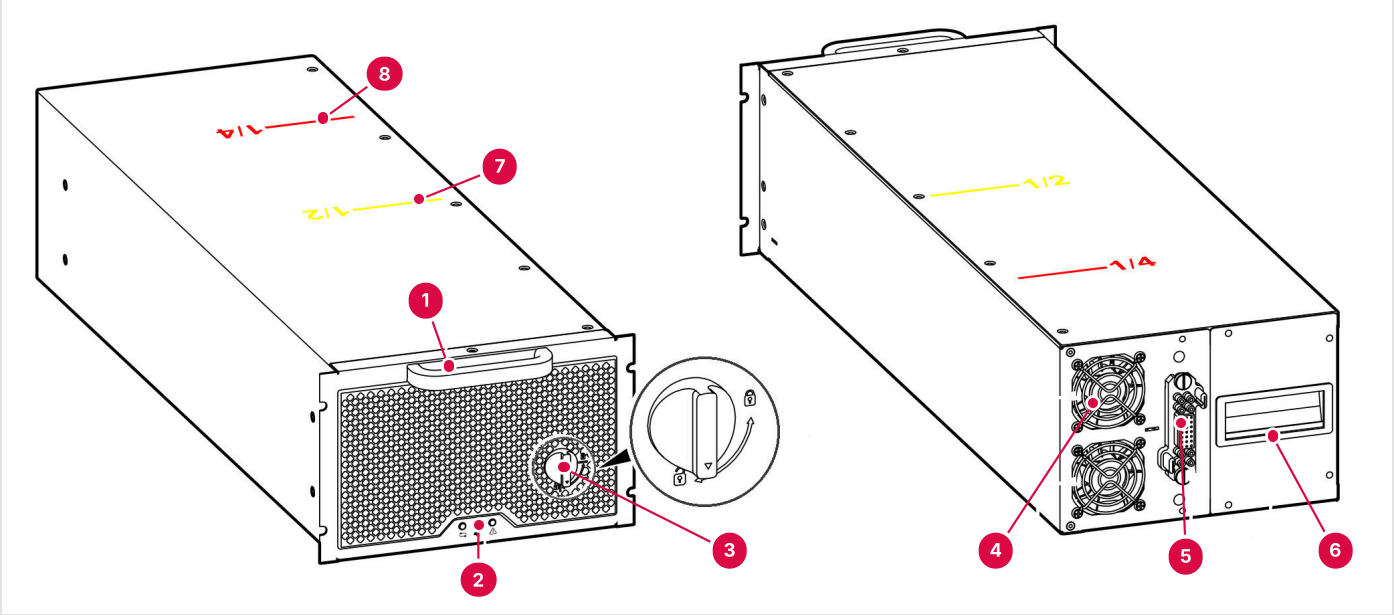

1. Front handle
2. Indicators: run, alarm, fault
3. ON/OFF knob (enlarged at the right)
4. Fan
5. Output connector
6. Rear handle
7. Yellow 1/2 mark: half of the module length
8. Red 1/4 mark: a quarter of the module length

FIGURE 2-6 Lithium battery module ETH-50-LI, front (left) and rear (right)

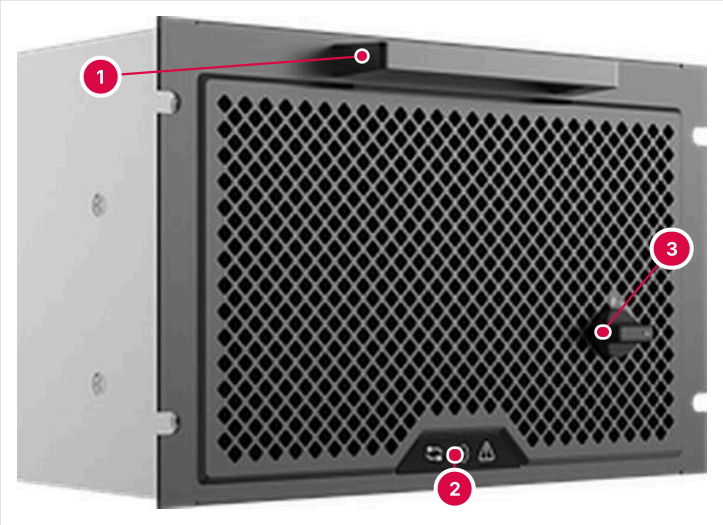

1. Front handle
2. Indicators: run ⇆, alarm, fault
3. ON/OFF knob

FIGURE 2-7 Front of a module in its bay

- The position marks on top of the module help you slide it in: the yellow 1/2 mark shows half of the module length, the red 1/4 mark a quarter.
- **Knob on the open padlock** (unlocked): the module is not locked in the cabinet and can be removed. The module is off.
- **Knob on the closed padlock** (locked): the module is locked in the cabinet and cannot be removed.

> ⚠ ***CAUTION***
>
> With the knob on the closed padlock the module switches on automatically and its output connector carries DC voltage.

Each module holds 18 LiFePO4 cells of 3.2 V, 50 Ah (57.6 V, 2.88 kWh nominal) and an isolated DC/DC converter that delivers 240 V DC to the UPS battery bus. Module size and weight: 8.8 × 26.2 × 6.0 in (223 × 665 × 152 mm), 81.6 lb (37 kg).

2.8.1 Module indicators

Each module has three indicators: run (green), alarm (yellow) and fault (red). Figure 2-8 shows what each pattern means; Figure 2-9 explains the symbols.

Indicator / Status	Run	Alarm	Fault
Charge			
Discharge			
Sleep			
OFF			
Module alarm	-*		
Communication abnormal	-		-
Module protection			
Battery abnormal			

FIGURE 2-8 Module indicator states



1. The indicator is on.
2. The indicator flashes once per second.
3. The alarm indicator flashes once every 3 seconds.
4. The indicator is off. A * in the table means any state; a dash, not specified.

FIGURE 2-9 Key to the indicator symbols — run, alarm, fault

2.9 Communication

The UPS communicates through RS-485, the dry contacts and the parallel port as standard, and through optional cards in the two intelligent slots.

TABLE 2-5 Standard communication ports

Method	Port
RS-485	RS-485 port, terminals A and B (item 1 in Figure 2-5)
Dry contacts	Dry contact 1: output dry contacts OUT.1–OUT.5. Dry contact 2: input dry contacts EPO + IN.1.
Parallel	Parallel port with the optional parallel kit: two RJ45 ports

TABLE 2-6 Optional cards and kits

Card or kit	Picture	Where it goes
Parallel kit (2 m cables), PAR-KIT-ETH	Figure 2-10	Parallel port
SNMP-L network card	Figure 2-11	Slot 1, or slot 2
Dry-contact expansion card	Figure 2-12	Slot 2 (one card at a time)
Protocol-converter card (RS-485 + RS-232)	Figure 2-13	Slot 2 (one card at a time)

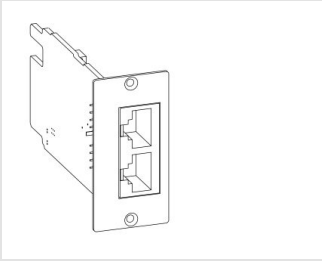

FIGURE 2-10 Parallel kit

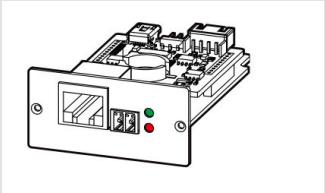

FIGURE 2-11 SNMP-L card

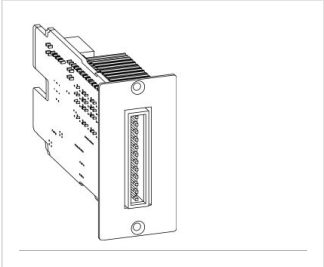

FIGURE 2-12 Dry-contact card

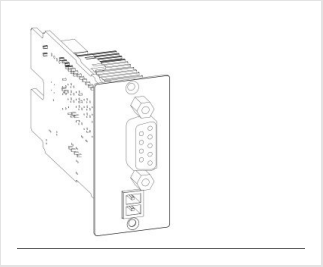

FIGURE 2-13 Protocol-converter card

2.9.1 Communication ports and dry contacts

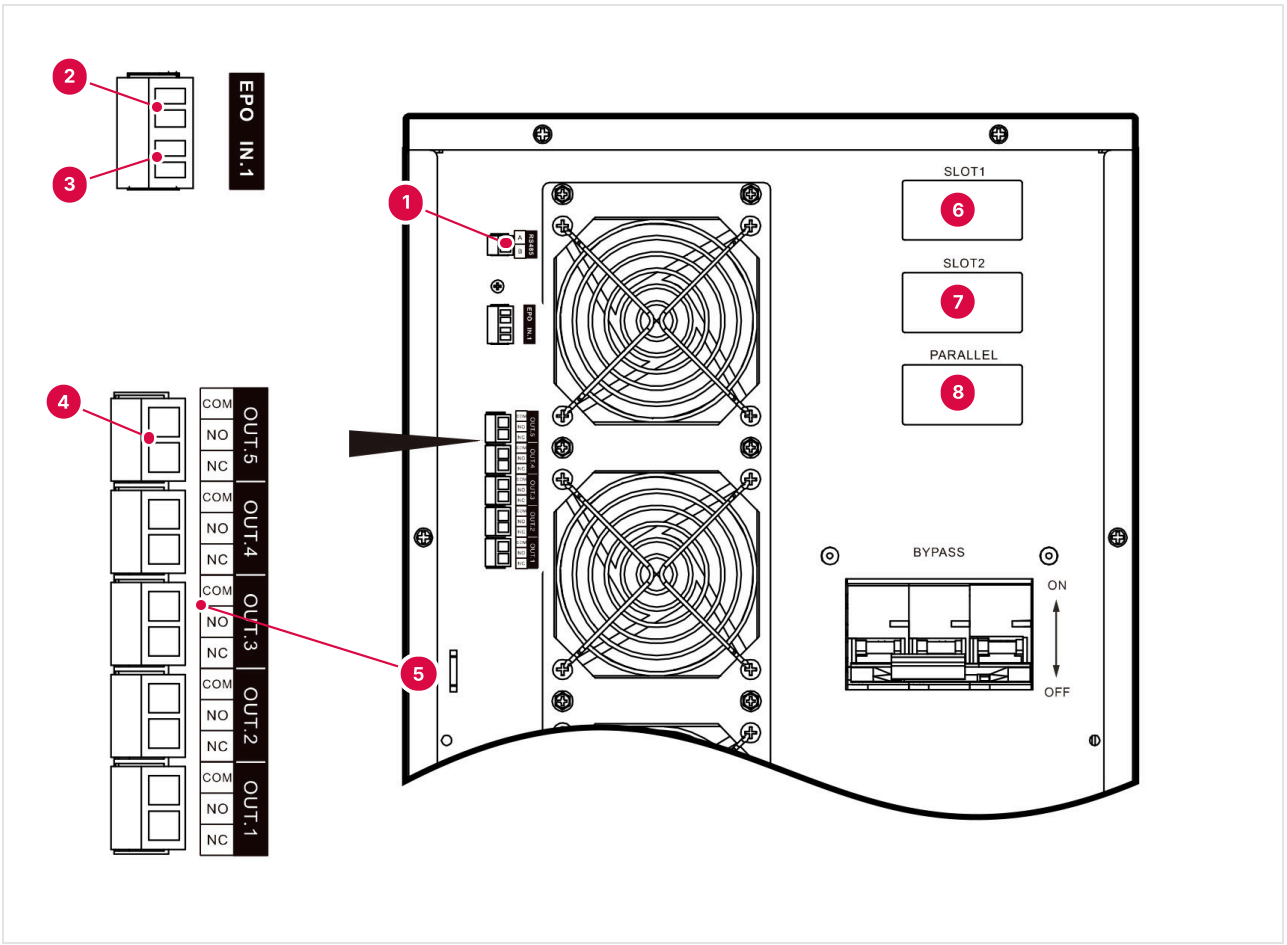

1. RS-485 port, terminals A (+) and B (–)
2. EPO input, 2 pins: keep shorted for the UPS to run
3. IN.1 input dry contact, 2 pins
4. OUT.5 (top block) ... OUT.1 (bottom block): output dry contacts
5. Pins of each output block, top to bottom: COM, NO, NC
6. Slot 1
7. Slot 2
8. Parallel port

FIGURE 2-14 Communication ports and dry-contact terminals (upper rear panel); the terminal blocks are shown enlarged at the left

2.9.2 RS-485

The UPS communicates with a PC or a building management system through its RS-485 port.

TABLE 2-7 RS-485 connection, UPS to PC

UPS RS-485 port	PC RS-485 port
A	A (+)
B	B (–)

i NOTE The standard RS-485 port on the rear panel does not work while slot 2 holds an optional communication card.

2.9.3 Dry contacts

The dry contacts send status and alarm signals to, or receive commands from, external equipment. Their functions are set on the touchscreen (Section 5.5.4). Figure 2-14 shows the terminals.

⚠ CAUTION

Relay contact rating: 277 V AC / 30 V DC, 10 A. Relay coil voltage: 12 V.

TABLE 2-8 Dry contact functions

Contact	Pins	Function	Default
OUT.1	NC / NO / COM	When the signal is active, NO closes to COM and NC opens. Signal selectable (Table 2-10).	Utility abnormal
OUT.2	NC / NO / COM	As OUT.1.	Bypass abnormal
OUT.3	NC / NO / COM	As OUT.1.	Battery abnormal
OUT.4	NC / NO / COM	As OUT.1.	Output abnormal
OUT.5	NC / NO / COM	As OUT.1.	Overload alarm
EPO	2 pins	Active when the two pins are opened. Fixed function (EPO), not selectable.	EPO
IN.1	2 pins	Trigger level selectable (NC/NO); default: active when shorted. Signal selectable (Table 2-9).	Charging disabled

⚠ CAUTION

The EPO input must be shorted for the UPS to run. To use a remote EPO switch, wire a normally closed contact across the two EPO pins. If the input opens, the UPS shuts down both the inverter and the bypass outputs and the touchscreen reports an EPO fault. The fault clears after the UPS has shut down completely and the input is shorted again.

TABLE 2-9 Selectable input dry-contact signals

No.	Signal	What the UPS does when it receives it
1	Charging disabled	Alarms and stops charging the battery. Trigger level selectable.
2	External MBB on	External maintenance-bypass breaker closed: alarms, turns the inverter off and transfers to bypass. Trigger level selectable.
3	External BB status	External battery breaker open: alarms and reports a fault. Trigger level selectable.
4	UPS remote ON/OFF	Turns the UPS on. Trigger level selectable.
5	Battery ground fault	Alarms and reports a fault. Trigger level selectable.

No.	Signal	What the UPS does when it receives it
6	Discharging disabled	Alarms and prevents the battery from discharging. Trigger level selectable.

TABLE 2-10 Selectable output dry-contact signals (the contact switches when the condition is true)

No.	Signal (as on the display)	Condition
1	Mains abnormal	Utility supply abnormal.
2	Bypass abnormal	Bypass supply abnormal.
3	Battery abnormal	Battery low, overvoltage, over-temperature or disconnected.
4	Output abnormal	Output abnormal.
5	Overload abnormal	Bypass or inverter overloaded.
6	General abnormal	Any UPS fault alarm.
7	Normal operation	UPS in normal operation.
8	Battery operation	UPS running on battery.
9	Bypass operation	UPS running on bypass.
10	UPS ON/OFF status	UPS on.
11	Battery low	Battery voltage low.
12	ECO mode	Output in ECO mode.
13	Fan fault	Fan abnormal.

2.9.4 Parallel port

The parallel kit (PAR-KIT-ETH, 2 m cables) fits the parallel port. The UPS ships set to single mode. For parallel operation, set every UPS to the same parallel mode (redundant or expand) and give each UPS a different Parallel UPS ID (1 to 4) on the touchscreen — see Section 5.5.7. Wiring: Section 4.8.3.

2.9.5 Intelligent slots

- **Slot 1 — SNMP-L card.** Plug-in card, configured from its web page. Set it up as described in Section 7.1.
- **Slot 2 — dry-contact expansion card (optional).** Three output dry contacts (utility status, battery status, inverter status — configurable as bypass output status) and two inputs (battery temperature for charge compensation, battery breaker status — configurable as remote ON/OFF).
- **Slot 2 — protocol-converter card (optional).** One RS-485 port reserved for lithium battery communication (2-pin green terminal block) and one RS-485 + RS-232 port (DB9; one interface at a time).
- **Slot 2 — SNMP-L card (optional).** Set it up as in slot 1 (menu path **Management › Device management › Power › UPS**).

i NOTE See the installation guide supplied with each optional card for details.

2.10 How ETHERNO works

ETHERNO is made of a rectifier/PFC, an inverter, a charger (DC/DC) and a bypass static switch, with a manual maintenance bypass. Its inputs are the utility input, the bypass input and the battery; its outputs are the inverter output, the bypass output and the maintenance bypass (Figure 2-15).

- With utility power present, the rectifier runs and the charger charges the battery.

- When the UPS is off and the bypass is normal, the load is fed from the bypass.
- When the UPS is on, the rectifier/PFC builds the DC bus and the inverter produces a pure sine wave: the load transfers from bypass to inverter.
- When utility power fails, the battery voltage is boosted to the DC bus and the inverter keeps feeding the load. When utility power returns, the UPS goes back to normal mode automatically.

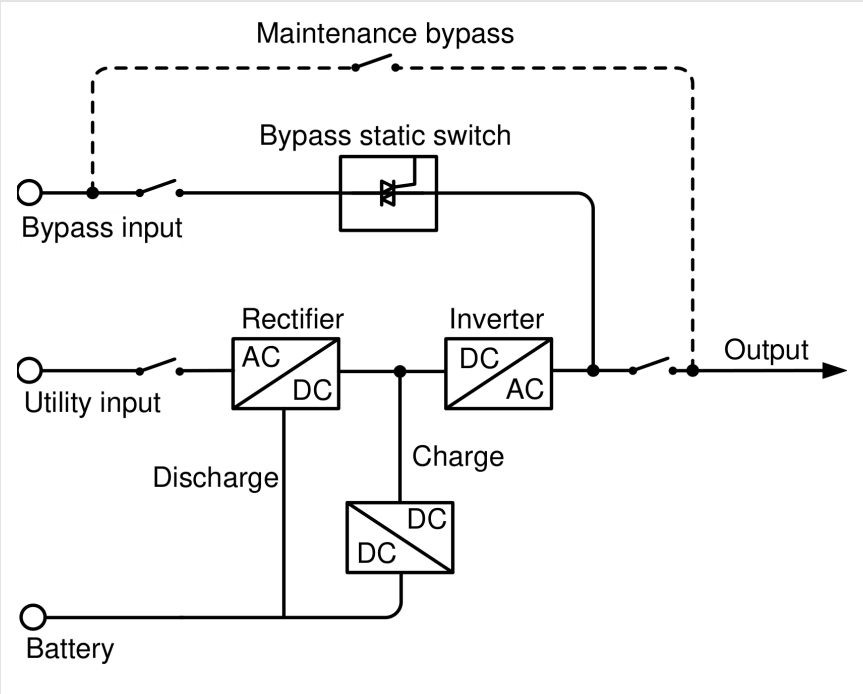

FIGURE 2-15 Block diagram

2.10.1 Operating modes

ETHERNO has five operating modes: normal, battery, bypass, ECO and maintenance bypass. In the drawings the solid line shows the power flow; dashed lines carry no power.

Normal mode. With utility power present the UPS runs on the inverter and charges the battery at the same time (Figure 2-16).

Battery mode. When utility power fails, the rectifier switches to the battery at once, boosts the battery voltage and holds the DC bus, so the inverter output continues without a break (Figure 2-17). If utility power returns before the battery is exhausted, the rectifier goes back to the utility input and recharges the battery. If the outage continues, the UPS alarms (sound and light) and runs until the battery reaches its low-voltage limit; the buzzer then sounds continuously and the load loses power. About 1 minute later the UPS switches itself off, so the battery is not drained further. When utility power returns, the UPS restarts automatically in normal mode.

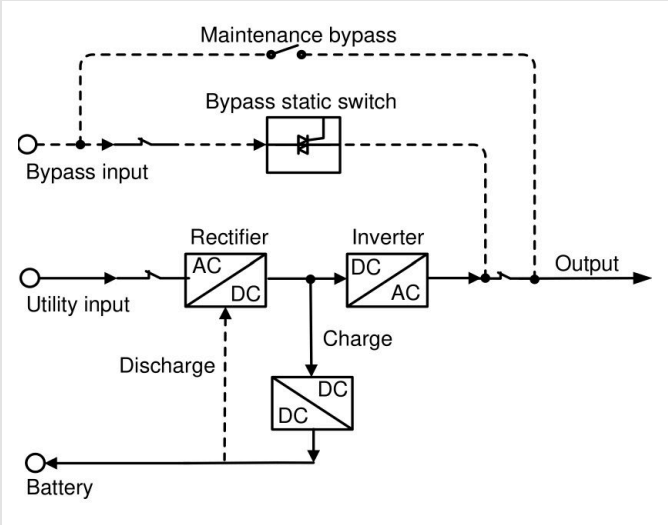

FIGURE 2-16 Normal mode

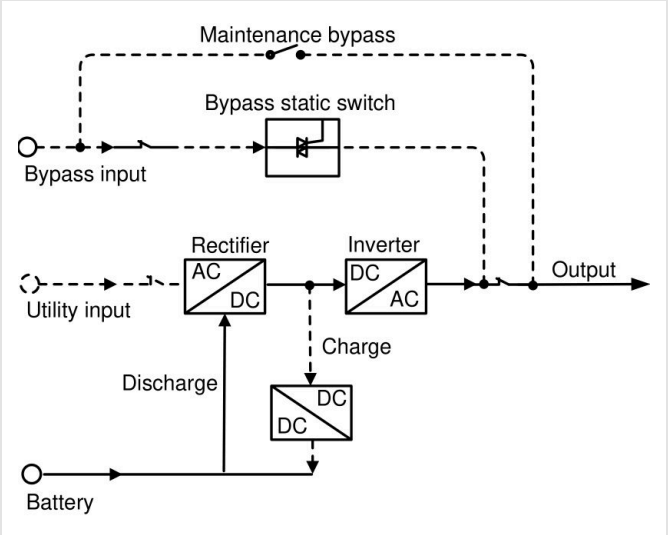

FIGURE 2-17 Battery mode

Bypass mode. With the bypass voltage normal, the load is fed from the bypass when the UPS is off, or when a fault occurs while it is on (inverter overload, overcurrent surge, IGBT over-temperature, etc.). When the fault clears, the UPS returns to the inverter. If the same fault occurs more than 5 times in a short time, the UPS stays on bypass until it is switched off manually or loses power, the fault is removed and the UPS is restarted (Figure 2-18).

ECO mode (single UPS only). The load is fed from the bypass while the bypass voltage is normal, and transfers to the inverter when it is not. ECO is an energy-saving mode for loads that do not need the highest power quality; efficiency reaches 98 %.

Maintenance bypass mode. To service the UPS without interrupting the load, remove the maintenance-bypass cover (the UPS turns its inverter off and runs on bypass), close the maintenance-bypass breaker, then open the input, bypass and output breakers. The load is fed through the maintenance-bypass breaker and the UPS is de-energized, so it can be serviced safely (Figure 2-19). Procedure: Section 6.4.

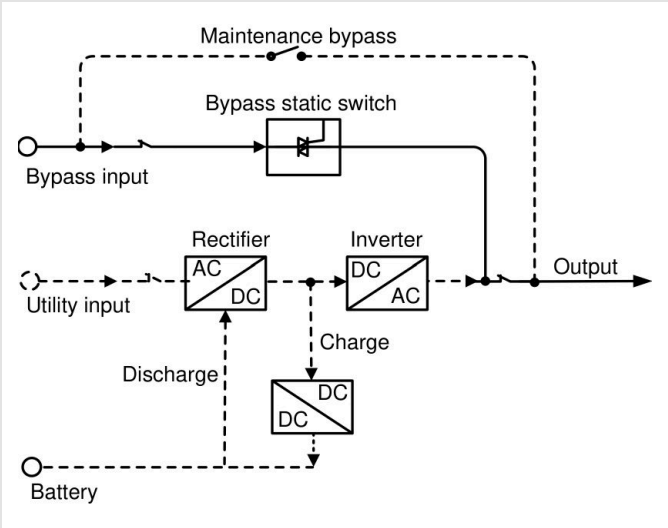

FIGURE 2-18 Bypass mode

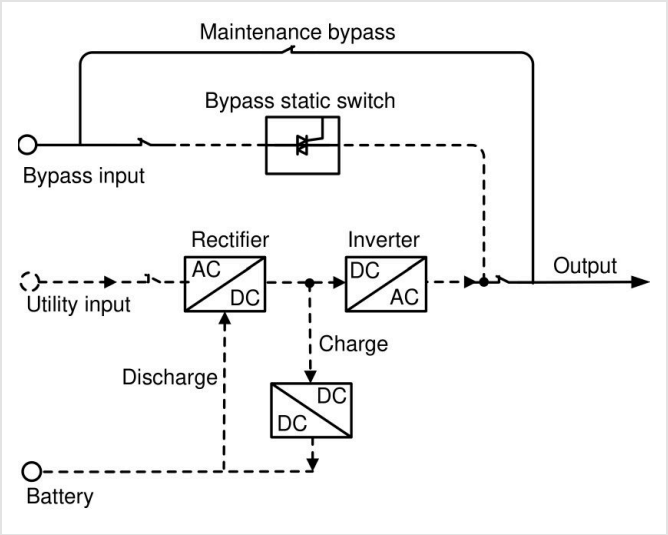

FIGURE 2-19 Maintenance bypass mode

CHAPTER 3

03 Planning the installation

Sizing the load, estimating the runtime and running on a generator — before you install.

3.1 Sizing the load

ETHERNO delivers up to 10, 20 or 30 kW (output power factor 1). Size the UPS on the watts (W) the loads draw.

1. List every device that will run on the UPS.
2. Read its power in watts on the label or in the data sheet. If only volts and amps are given, multiply them (V × A): that gives VA, which is equal to or higher than the watts, so the estimate is on the safe side.
3. Add the watts. Keep the total at or below 80 % of the rating: the margin covers start-up currents, growth and battery ageing.
4. Measure once the UPS runs: the display shows the real load (Section 5.2.2).

TABLE 3-1 Worked example — ETHERNO 20K

Load	Watts
Server racks	9,000 W
Storage	2,500 W
Network core	1,500 W
Cooling controls	1,000 W
Total	**14,000 W — 70 % of 20,000 W**

Runtime of this example: with 2 modules, about 18 minutes at 70 % load (Table B-1).

3.2 Estimating the runtime

1. Work out the load as a percentage of the rated output power.
2. Find the two load rows either side of it in Table B-1 and estimate between them.
3. Allow a margin: the runtime is shorter with batteries that are old, cold, hot or not fully charged.
4. Halving the load roughly doubles the runtime, or more.

3.3 Running on a generator

The PFC input (power factor 0.99 or more) loads a generator cleanly, and the wide input window (90–155 V line-to-neutral at full load) rides through the swings of a standby generator.

- Choose a generator rated at least 1.5 times the UPS input power, to cover the battery recharge as well.
- Let the generator reach stable voltage and frequency before it feeds the UPS. The UPS stays on battery until the input is within range.
- If the UPS keeps returning to battery on the generator, the generator is too small or unstable.

04

CHAPTER 4

Installation

Preparing the site, the protection and the cables, moving and unpacking the UPS, anchoring it, installing the battery modules and wiring a single UPS or a parallel system.

4.1 Before you install

- Use insulated tools to avoid electric shock.
- The wiring terminals carry high voltage. Make sure they are de-energized before you connect any cable.
- Place the UPS on a flat, level floor.
- Do not place objects on the UPS or sit on it.

4.2 Tools

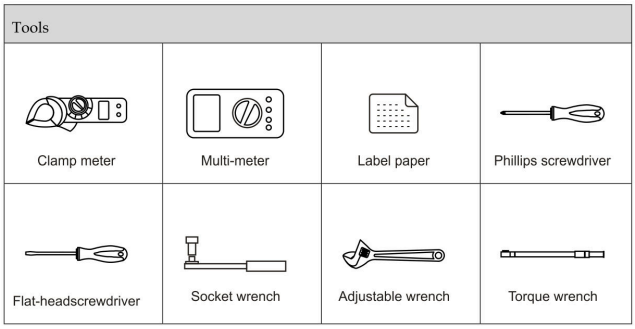

FIGURE 4-1 Tools (1 of 2)

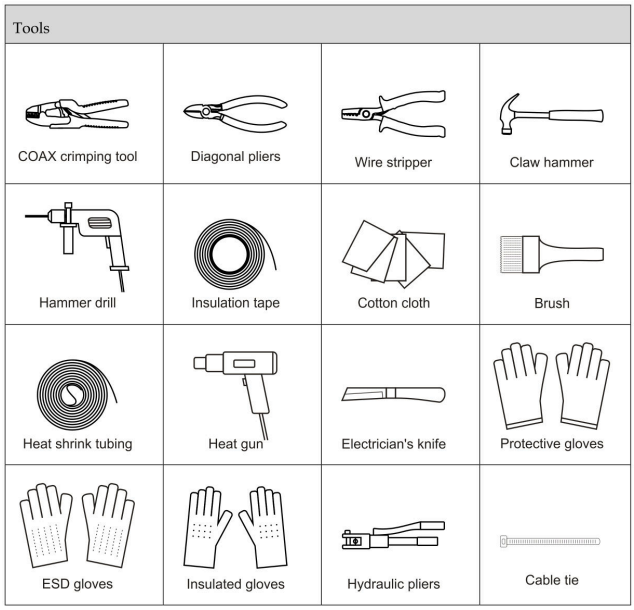

FIGURE 4-2 Tools (2 of 2)

4.3 Site and space

Install the UPS in a well-ventilated room, away from water, heat sources and flammable or explosive materials, out of direct sunlight, dust, volatile gas, corrosive substances and salt air (Section 1.3).

- Leave at least 12 in (300 mm) between the rear and both sides of the UPS and any wall or other equipment. Air enters at the front and leaves at the rear (Figure C-4).
- Keep the working space in front of the rear panel and of the front door that NEC 110.26 requires for live parts at 208/120 V, and room to open the front door and pull out a module (26.2 in / 665 mm long).
- The floor must carry the weight of the UPS with its modules: up to 485 lb (220 kg) for the 30K with three modules (Table A-1).

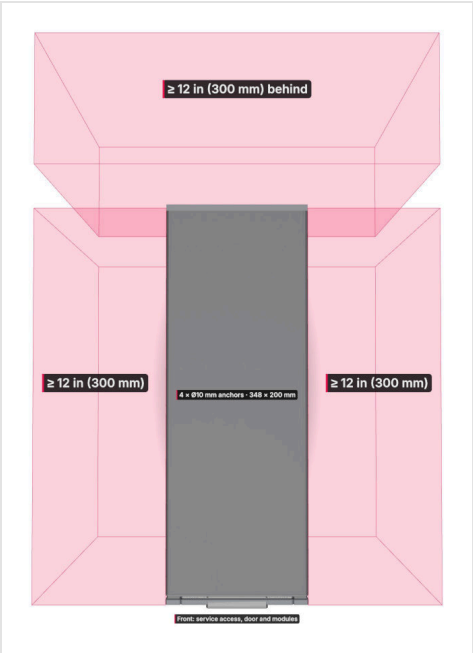

FIGURE 4-3 Ventilation clearances seen from above: at least 12 in (300 mm) behind and at both sides; the front is kept free for the door and the modules — illustration from the AEC 3D model

4.4 Breakers and cables

Size the cables and breakers from the maximum steady-state phase currents of the UPS (Table 4-1).

TABLE 4-1 Maximum steady-state phase current

Circuit	ETHERNO 10K	ETHERNO 20K	ETHERNO 30K
AC input (A)	37.0	75.9	100.0
Bypass input (A)	30.3	60.6	90.9
AC output (A)	30.3	60.6	90.9

4.4.1 Upstream breakers

Install a breaker matched to the UPS rating ahead of the UPS input to isolate it from the utility supply — preferably a breaker with a double-pole disconnect feedback contact. To allow for the charging power and the inrush current at turn-on, the breaker must be rated above the maximum input current. It must not have ground-fault (leakage) protection, which could trip unnecessarily. A DC breaker for an external battery must be rated at least 500 V DC.

In the US, size every branch circuit to the NEC: the overcurrent device and the conductors carry at least **125 % of the continuous current** (NEC 215.2, 215.3, 230.42), and the conductors are chosen from the 75 °C column of NEC 310.16 (terminations rated 75 °C, NEC 110.14(C)). Table 4-2 gives the result for copper conductors in conduit; the installer's calculation for the actual installation (ambient temperature, conduit fill, length, voltage drop) prevails.

TABLE 4-2 US branch circuits sized to the NEC — copper, 75 °C terminations

Circuit	10K breaker	10K conductor	20K breaker	20K conductor	30K breaker	30K conductor
AC input — 125 % of 37.0 / 75.9 / 100.0 A = 46.3 / 94.9 / 125 A	50 A, 3-pole	8 AWG	100 A, 3-pole	3 AWG	125 A, 3-pole	1 AWG

Circuit	10K breaker	10K conductor	20K breaker	20K conductor	30K breaker	30K conductor
Bypass input — 125 % of 30.3 / 60.6 / 90.9 A = 37.9 / 75.8 / 113.6 A	40 A, 3-pole	8 AWG	80 A, 3-pole	4 AWG	125 A, 3-pole	1 AWG
AC output — same currents as the bypass	40 A, 3-pole	8 AWG	80 A, 3-pole	4 AWG	125 A, 3-pole	1 AWG
Neutral (input, bypass, output)	—	as the phases	—	as the phases	—	as the phases
Equipment ground (PE), minimum NEC 250.122	—	10 AWG	—	8 AWG	—	6 AWG

i NOTE With a common utility and bypass supply, one upstream breaker can feed both inputs: size it and its conductors for the input current. The table sizes the neutral as the phases. With strongly non-linear loads (IT equipment with switch-mode power supplies) the neutral can carry up to 1.73 times the phase current: size it for that current. For the PE conductor AEC recommends the factory sizes of Table 4-4 (8 / 3 / 1 AWG), larger than the NEC minimum.

The factory recommendation, for reference, is given in Table 4-3 and Table 4-4.

TABLE 4-3 Factory breaker recommendation (3-pole, 480 V AC withstand voltage)

Circuit	ETHERNO 10K	ETHERNO 20K	ETHERNO 30K
AC input	63 A	100 A	125 A
Bypass input	63 A	100 A	125 A
AC output	63 A	100 A	125 A

⚠ CAUTION

In the US, a breaker must protect the conductors it feeds (NEC 240.4): do not use the 63 A factory breaker with 8 AWG or 10 AWG conductors. Use Table 4-2, or larger conductors.

4.4.2 Cables

The cable sizes in Table 4-4 are the factory reference for copper conductors rated 194 °F (90 °C), about 16 ft (5 m) long. For runs longer than 65 ft (20 m), increase the size.

TABLE 4-4 Factory recommended cable size (copper, 90 °C / 194 °F)

Conductor	ETHERNO 10K	ETHERNO 20K	ETHERNO 30K
Utility input, phases (A/B/C)	8 AWG	3 AWG	1 AWG
Utility input, neutral (N)	8 AWG	3 AWG	1 AWG
Bypass input, phases (A/B/C)	10 AWG	4 AWG	2 AWG
Bypass input, neutral (N)	10 AWG	4 AWG	2 AWG
Output, phases (A/B/C)	10 AWG	4 AWG	2 AWG
Output, neutral (N)	10 AWG	4 AWG	2 AWG
Ground (PE)	8 AWG	3 AWG	1 AWG

TABLE 4-5 Terminal bolts and torque (AC input, bypass input, AC output)

Item	ETHERNO 10K	ETHERNO 20K	ETHERNO 30K
Minimum bolt size	M6	M6	M6
Torque	26.6 lbf·in (3.0 N·m)	26.6 lbf·in (3.0 N·m)	26.6 lbf·in (3.0 N·m)

NOTICE

The AEC wiring drawing (Table C-1) gives M4 × 30 bolts for the AC terminals and M6 × 16 for PE. Check the terminal bolts on your unit, and ask AEC for the torque, before you order ring terminals.

TABLE 4-6 Recommended ring terminals

Cable size	Terminal type
8 AWG	RNBS8-6
3 AWG	RNBS22-6
1 AWG	SG50-6

If you use other ring terminals, check their dimensions against Figure 4-4 and Table 4-7.

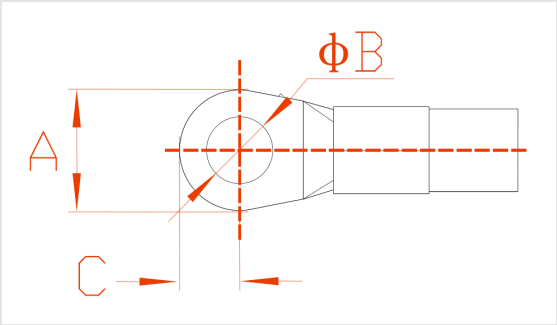

FIGURE 4-4 Ring terminal dimensions

TABLE 4-7 Ring terminal dimension limits (input, bypass, output)

Dimension	Limit
A (width)	≤ 0.77 in (19.5 mm)
B (stud hole)	≥ 0.24 in (6 mm)
C (barrel end to hole)	≤ 0.47 in (12 mm)

i NOTE The cables supplied by AEC meet national standards or carry UL certification. For lengths under 1.6 ft (0.5 m), a cable slightly smaller than the recommended size can be used.

4.5 Transport and unpacking

4.5.1 Transport

⚠ CAUTION

- The UPS must be moved by trained personnel.
- Move it gently; avoid impacts and drops. Keep it upright; do not set it down or lift it abruptly.
- If the UPS will be stored for a long time after unpacking, repack it in its original plastic bag.

Move the UPS with a forklift or a pallet jack. Center the UPS on the forks and move slowly and steadily (Figure 4-5, Figure 4-6).

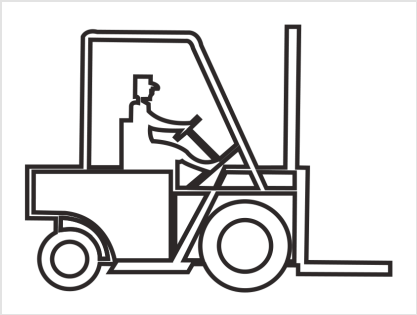

FIGURE 4-5 Moving with a forklift

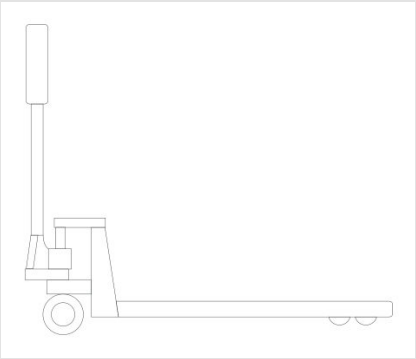

FIGURE 4-6 Moving with a pallet jack

4.5.2 Unpacking

i NOTE Choose the unpacking place in advance, as close as possible to the installation site.

1. Check the packaging for transport damage. If it is damaged, notify the carrier immediately.
2. Move the UPS to the installation site.
3. Remove the outer packaging and take out the accessories.
4. Inspect the UPS for transport damage (notify the carrier of any damage), and check the accessories against the packing list. If anything is missing or wrong, note it and contact AEC.
5. Lower the front panel of the pallet to form a ramp (Figure 4-7).
6. Remove the bolts that fix the UPS and its support plate to the wooden pallet (circled in Figure 4-7), and remove the support plate.
7. Slowly roll the UPS down the ramp to the floor.

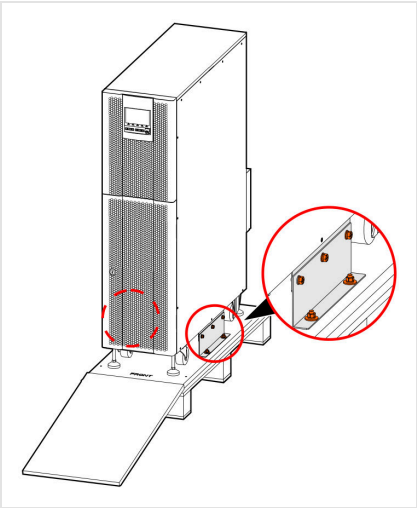

FIGURE 4-7 Pallet ramp and the bolts that fix the UPS to the pallet

⚠ CAUTION

Two people are needed to move the UPS, one on each side, to keep it from tipping and to avoid injury.

4.6 Mounting the UPS

i NOTE This section describes anchoring the UPS to the floor; adapt the procedure to the site. The UPS is designed to stand on concrete or an equivalent non-combustible, rigid floor.

1. Plan the position from the UPS dimensions (Figure 4-8) and the clearances in Section 4.3.
2. Drill four 0.39 in (10 mm) holes in the floor with a hammer drill, at the positions of the base mounting holes (Figure 4-8; tolerance ±0.08 in / ±2 mm), and fit M8 expansion anchors (Figure 4-9).
3. Move the UPS over the holes. Loosely fit the support plate (one-third to two-thirds of the screws, not tightened) and align its mounting holes with the anchors. Fit the 8 mm flat washers and spring washers and the bolts, then tighten the UPS and the six support-plate screws.
4. Lower the leveling feet (counterclockwise) until they rest on the floor (Figure 4-10).

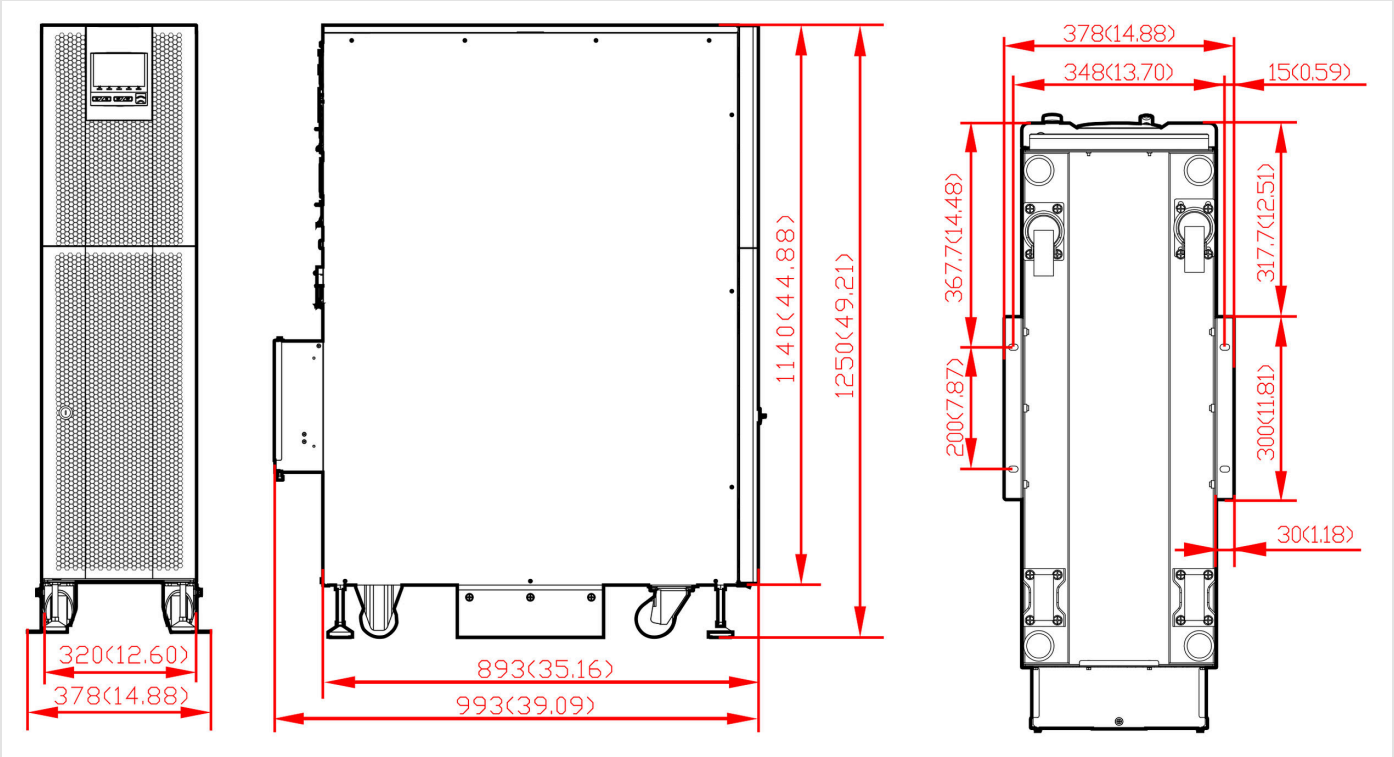

FIGURE 4-8 Dimensions in mm (in) — front view, side view and base mounting holes (bottom view)

The cabinet is 12.6 in (320 mm) wide; with the anchoring brackets the base is 14.9 in (378 mm) wide.

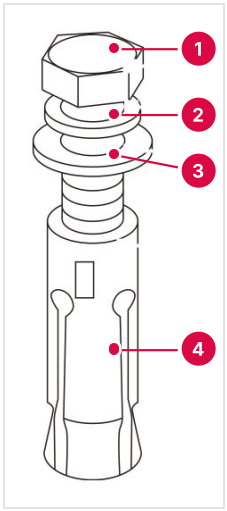

1. Bolt
2. Spring washer
3. Flat washer
4. Expansion sleeve

FIGURE 4-9 M8 expansion anchor

To fit an anchor: drill the hole with a hammer drill; screw the anchor together loosely, set it upright in the hole and tap it with a rubber mallet until the whole sleeve is in the hole; pre-tighten it; then unscrew the bolt and take off the spring washer and the flat washer, ready for step 3.

i NOTE The exposed height of the expansion anchor must not exceed 2.0 in (50 mm).

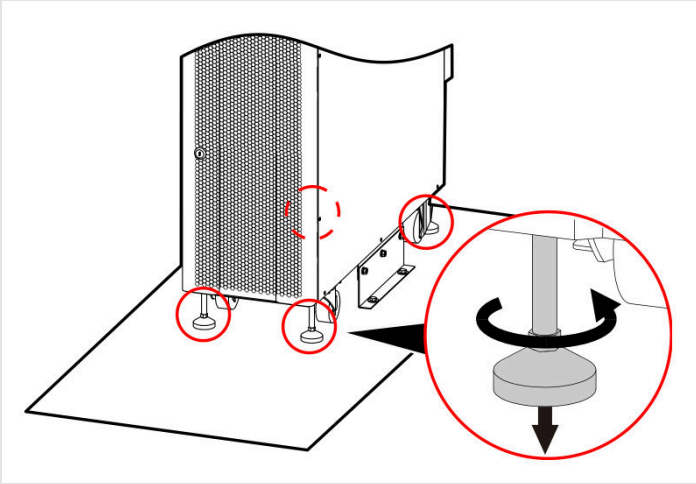

FIGURE 4-10 Lowering the leveling feet (circled)

i NOTE Turn the feet clockwise to raise them and counterclockwise to lower them. Adjust all four feet together, never one alone, so the UPS does not tilt.

⚠ CAUTION

Move the UPS steadily and keep it from tilting.

4.7 Installing the battery modules

⚠ CAUTION

Each lithium module weighs 81.6 lb (37 kg): follow the applicable handling rules and lift it with two people. Match each module to its plug-in, and install the modules from the bottom bay up.

1. Insert the key and turn it clockwise to open the front door (Figure 2-3).
2. Unplug the three battery plug-ins (Figure 4-11).
3. Remove the four screws and the battery cover plate of the bay (Figure 4-12).
4. Check that the module knob is on the open padlock (Section 2.8). Slide the module into the bay (Figure 4-13).
5. Fit and tighten the screws to secure the module (Figure 4-14).
6. Repeat for the next module, in the bay above.

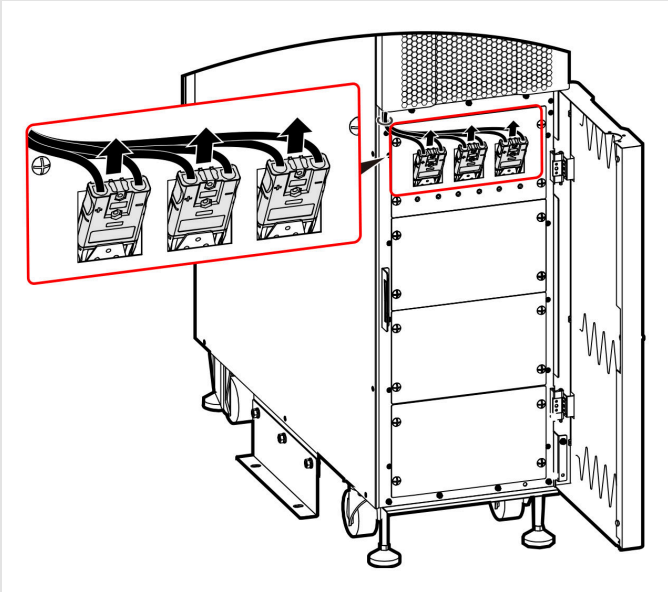

FIGURE 4-11 Unplugging the plug-ins

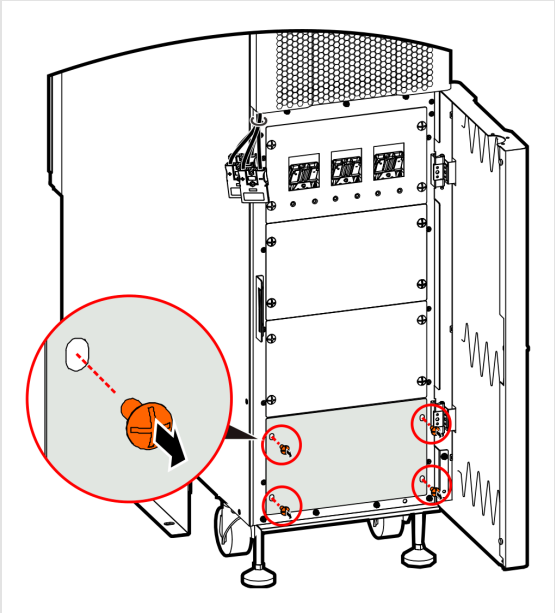

FIGURE 4-12 Removing the cover screws

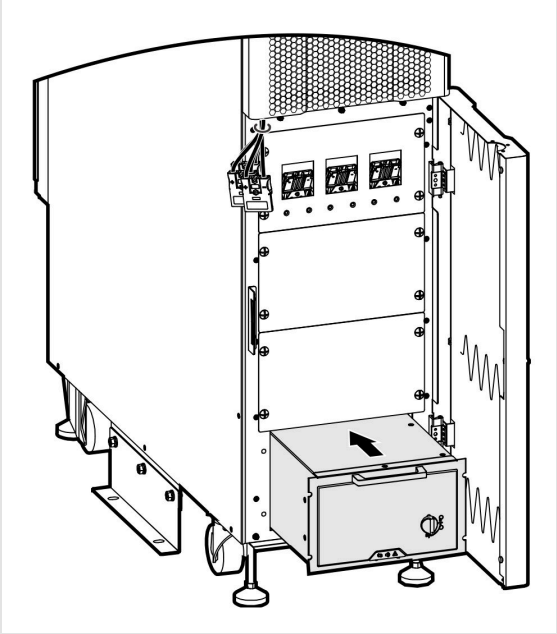

FIGURE 4-13 Inserting a module

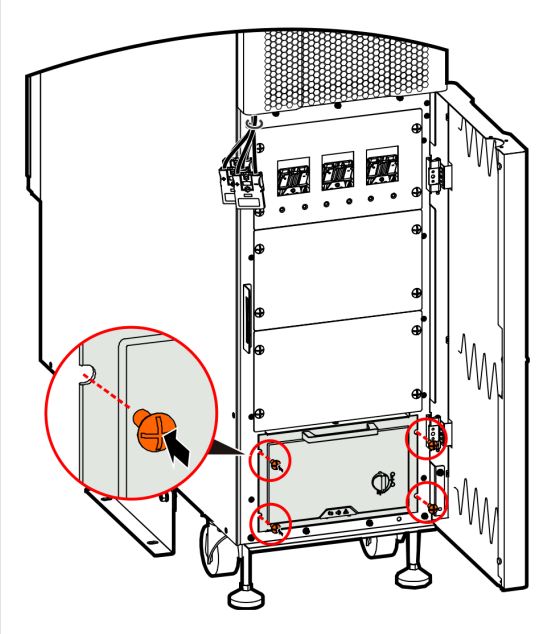

FIGURE 4-14 Securing the module

i NOTE All modules install the same way; the pictures show one module. Figure 4-15, Figure 4-16 and Figure 4-17 show the number and the bays of the modules for each factory configuration. Plug the plug-ins back in only after the wiring is complete — step 8 of Section 4.8.2.

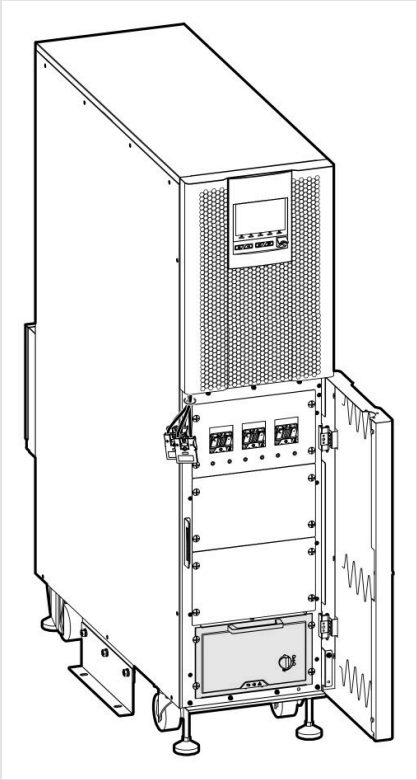

FIGURE 4-15 ETHERNO 10K, 1 module

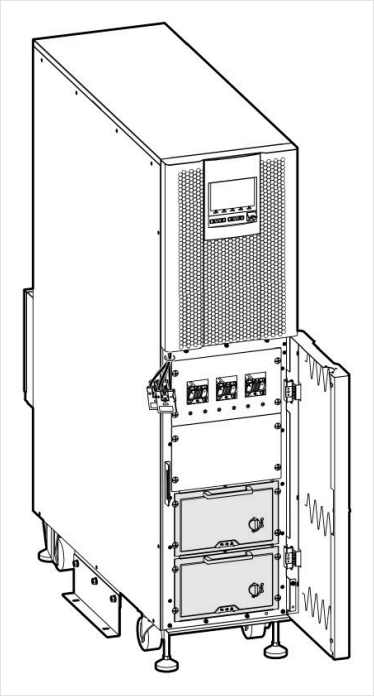

FIGURE 4-16 ETHERNO 20K, 2 modules

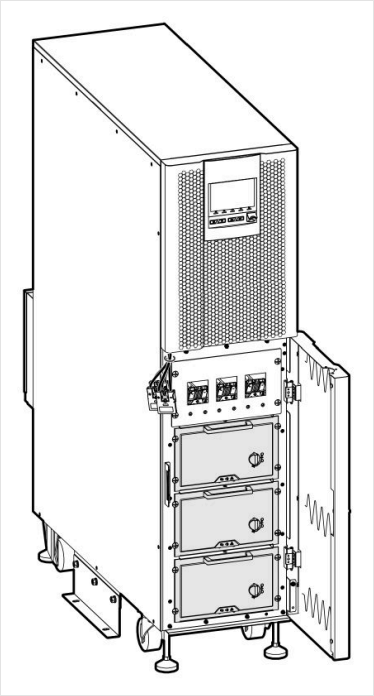

FIGURE 4-17 ETHERNO 30K, 3 modules

4.8 Electrical connection

⚠ *WARNING*

- Before you connect, make sure the utility breakers feeding the UPS are open. Never connect live cables.
- Route the power cables where they cannot be stepped on or tripped over.
- Do not move the UPS after it has been wired.

4.8.1 AC terminal block

The terminal block is behind the wiring cover at the lower rear (item 12 in Figure 2-5); the PE bar is below it (item 13). The terminals are marked on the block from left to right as in Figure 4-20. The three phases are marked A, B, C — the same as U, V, W or R, S, T.

Figure 4-18 shows where the wiring box is on the unit, Figure 4-19 the terminal block with every terminal numbered, and Table 4-8 the data for each terminal.

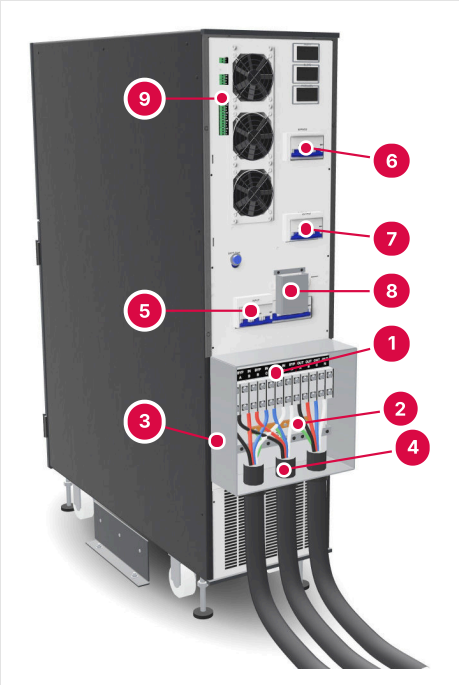

1. AC terminal block
2. PE (ground) bar
3. Wiring box
4. Cable bundles through the bottom plate
5. INPUT breaker
6. BYPASS breaker
7. OUTPUT breaker
8. Maintenance-bypass cover
9. Communication ports and dry contacts

FIGURE 4-18 Rear of the 30K with the wiring cover removed — illustration from the AEC 3D model; cable colors are not specified by AEC

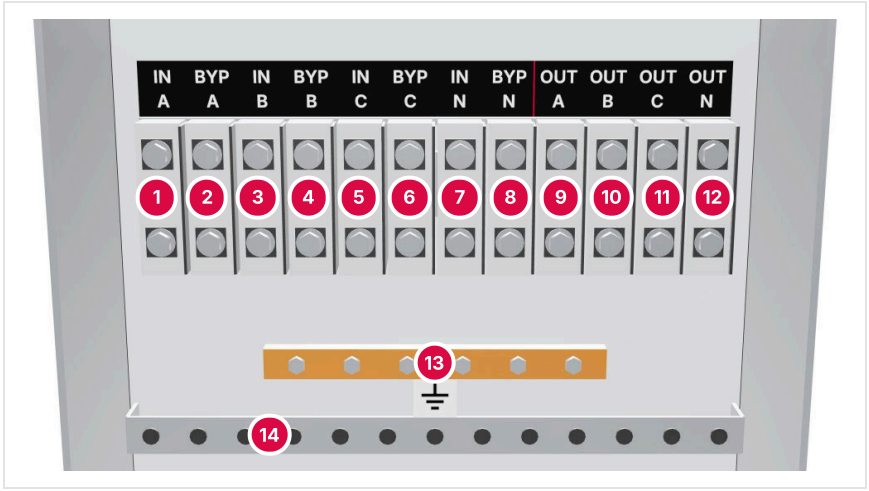

1. INPUT A
2. BYPASS A
3. INPUT B
4. BYPASS B
5. INPUT C
6. BYPASS C
7. INPUT N
8. BYPASS N
9. OUTPUT A
10. OUTPUT B
11. OUTPUT C
12. OUTPUT N
13. PE (ground) bar
14. Cable tie bar

FIGURE 4-19 AC terminal block and PE bar, seen from the rear, terminals numbered left to right — illustration from the AEC 3D model

TABLE 4-8 Terminal data

Terminal	Bolt / stud	Torque	Wire, min. (factory, 10K / 20K / 30K)	Wire, max. (largest accepted / NEC size)	Ring terminal
1, 3, 5 — INPUT A, B, C	M6 minimum (Table 4-5); drawing M4 × 30 (Table C-1) — ask AEC	26.6 lbf·in (3.0 N·m) (Table 4-5) — ask AEC	8 / 3 / 1 AWG	Largest: ask AEC · NEC 8 / 3 / 1 AWG (Table 4-2)	RNBS8-6 / RNBS22-6 / SG50-6 (Table 4-6)
7 — INPUT N	as 1, 3, 5	as 1, 3, 5	8 / 3 / 1 AWG	Largest: ask AEC · NEC as the phases	as 1, 3, 5
2, 4, 6 — BYPASS A, B, C	as 1, 3, 5	as 1, 3, 5	10 / 4 / 2 AWG	Largest: ask AEC · NEC 8 / 4 / 1 AWG	within Table 4-7
8 — BYPASS N	as 1, 3, 5	as 1, 3, 5	10 / 4 / 2 AWG	Largest: ask AEC · NEC as the phases	within Table 4-7

Terminal	Bolt / stud	Torque	Wire, min. (factory, 10K / 20K / 30K)	Wire, max. (largest accepted / NEC size)	Ring terminal
9, 10, 11 — OUTPUT A, B, C	as 1, 3, 5	as 1, 3, 5	10 / 4 / 2 AWG	Largest: ask AEC · NEC 8 / 4 / 1 AWG	within Table 4-7
12 — OUTPUT N	as 1, 3, 5	as 1, 3, 5	10 / 4 / 2 AWG	Largest: ask AEC · NEC as the phases	within Table 4-7
13 — PE bar	Drawing M6 × 16 (Table C-1)	ask AEC	8 / 3 / 1 AWG	Largest: ask AEC · NEC 250.122 minimum 10 / 8 / 6 AWG	Drawing: RNB8-6 / RNBS22-6 / SC50-8

NOTICE

The terminal bolt size is not settled: the factory table (Table 4-5) gives M6 minimum at 26.6 lbf·in (3.0 N·m), the AEC wiring drawing M4 × 30. Check the bolts on your unit and ask AEC for the bolt size and torque before you order ring terminals.

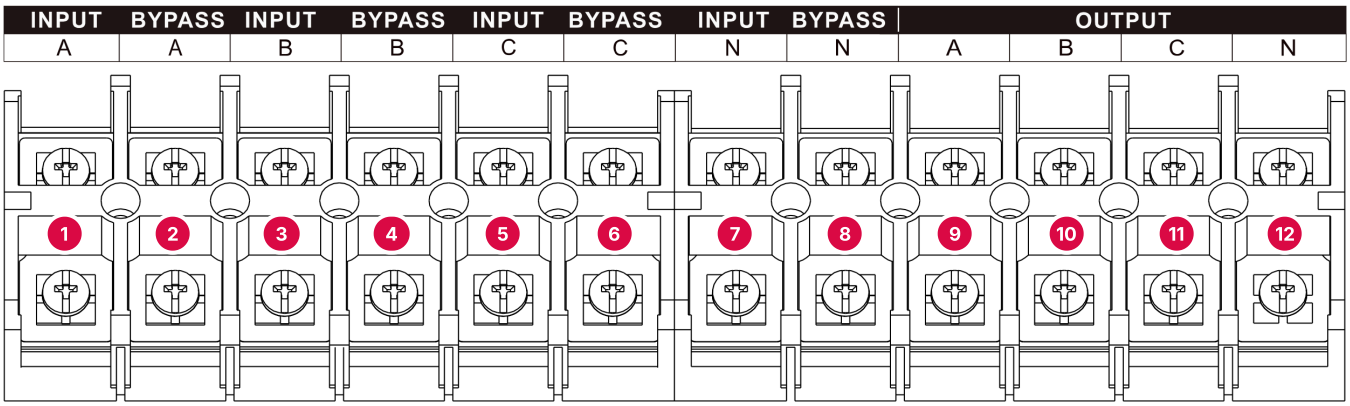

1. INPUT A — utility input, phase A
2. BYPASS A — bypass input, phase A
3. INPUT B — utility input, phase B
4. BYPASS B — bypass input, phase B
5. INPUT C — utility input, phase C
6. BYPASS C — bypass input, phase C
7. INPUT N — utility input, neutral
8. BYPASS N — bypass input, neutral
9. OUTPUT A — output, phase A
10. OUTPUT B — output, phase B
11. OUTPUT C — output, phase C
12. OUTPUT N — output, neutral

FIGURE 4-20 AC terminal block, seen from the rear, with its markings

The ground (PE) conductors of the input, the bypass and the output go to the PE bar below the terminal block (item 13 in Figure 2-5).

4.8.2 Wiring a single UPS

1. Loosen the screw at the bottom of the wiring box and remove the bottom plate (Figure 4-21).
2. Drill the cable entry holes in the bottom plate; recommended positions in Figure 4-23, sizes in Table 4-9.
3. Refit the bottom plate to the wiring box (Figure 4-22).
4. Remove the wiring cover: unscrew its bolts first, then slide the cover upward (Figure 4-24).

5. Connect the ground cables first, to the PE bar. Then connect the input, bypass and output cables to the terminals as marked on the block (Figure 4-20).
6. Divide the cables into three bundles and tie them to the bottom of the cabinet (Figure 4-25).
7. Refit the wiring cover (Figure 4-26).
8. Plug in the three battery plug-ins (Figure 4-27).
9. Turn the key counterclockwise to close the front door, and remove the key.

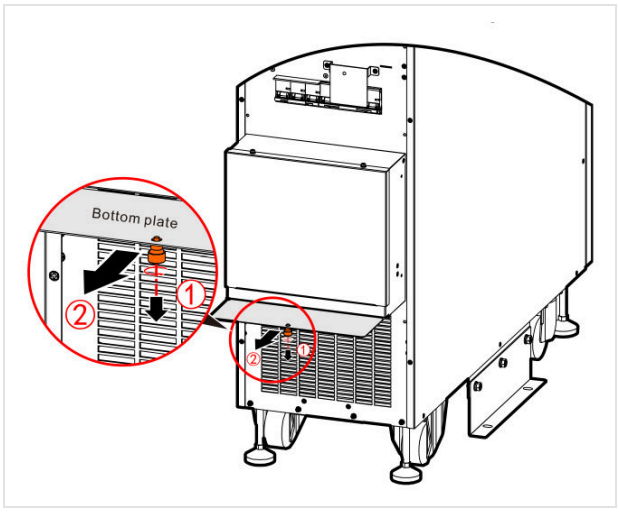

FIGURE 4-21 Removing the bottom plate

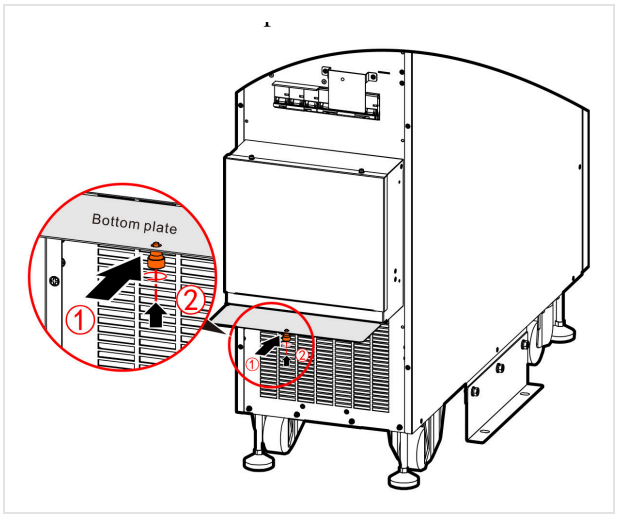

FIGURE 4-22 Refitting the bottom plate

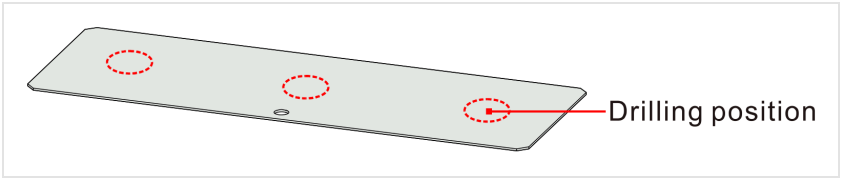

FIGURE 4-23 Recommended drilling positions on the bottom plate (dashed circles)

TABLE 4-9 Recommended cable entry hole size

Model	Hole diameter
ETHERNO 10K	1.09 in (27.8 mm)
ETHERNO 20K	1.72 in (43.7 mm)
ETHERNO 30K	1.97 in (50 mm)

i NOTE You can drill the cable entry holes to suit the site and the conduit used.

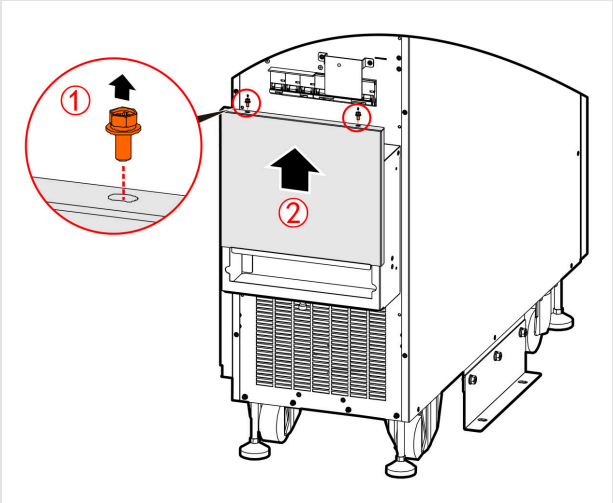

FIGURE 4-24 Removing the wiring cover

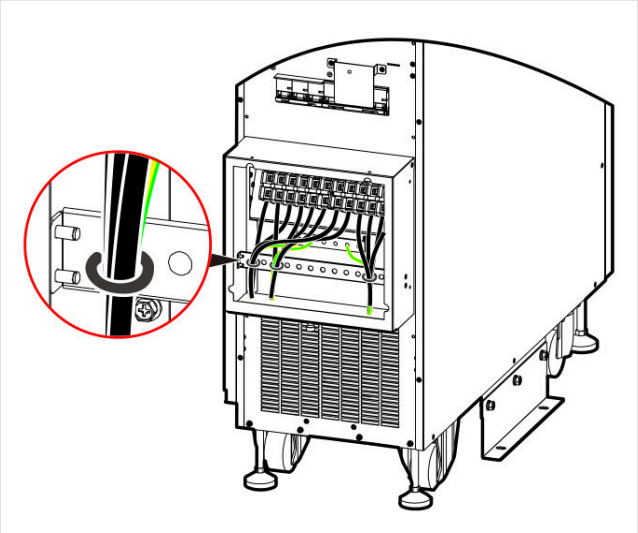

FIGURE 4-25 Securing the cables

⚠ CAUTION

- Wire the UPS exactly as marked on the terminal block (Figure 4-20) to avoid short circuits.
- Connect the ground cable first.
- Check that every cable is securely connected before you refit the wiring cover.

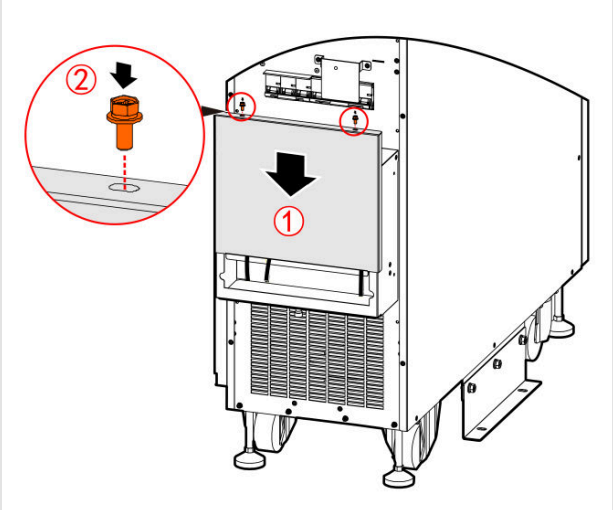

FIGURE 4-26 Refitting the wiring cover

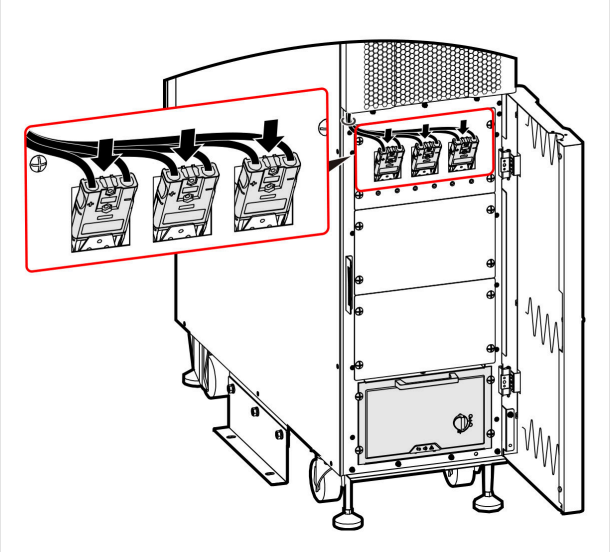

FIGURE 4-27 Plugging in the three plug-ins

i NOTE

- Plug in the battery plug-ins only after all battery modules are installed. To remove a battery module, unplug its plug-in first.
- External battery: the previous AEC manual allows an external battery wired to battery terminals, under a plastic protective cover, with the cables locked vertically and the terminals of adjacent poles not touching. The terminal block of Figure 4-20 has no battery terminals: ask AEC before you connect any external battery.

⚠ CAUTION

While you operate the maintenance-bypass breaker, do not operate the button switch (the door switch) shown in Figure 4-28.

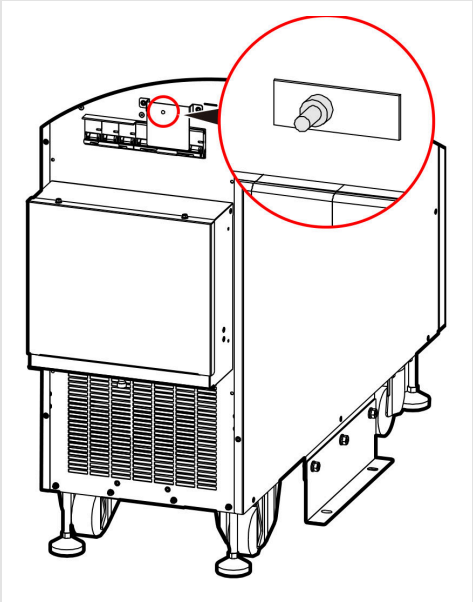

FIGURE 4-28 Button switch (door switch) position, at the top of the wiring box

4.8.3 Wiring a parallel system

1. Install each UPS and its modules as described in Section 4.6 and Section 4.7.
2. Connect the input, bypass and output cables of every UPS to common input, bypass and output buses, terminal to terminal in the same order (Figure 4-29). Ground every UPS.
3. Connect the parallel ports of the UPS units with the parallel cables (Figure 4-30, Figure 4-31).
4. Set every UPS to the parallel mode — see Section 5.5.7.

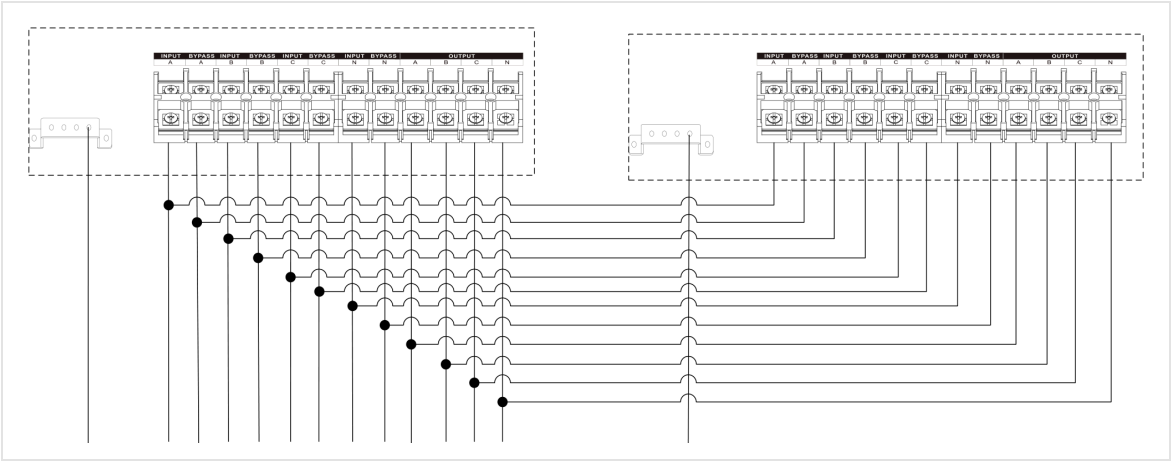

FIGURE 4-29 Parallel system power wiring, two UPS — each terminal of UPS 1 and UPS 2 goes to the same bus (input A, B, C, N; bypass A, B, C, N; output A, B, C, N; ground)

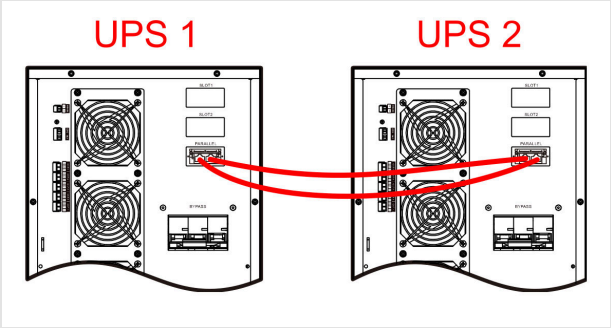

FIGURE 4-30 Parallel cables, two UPS

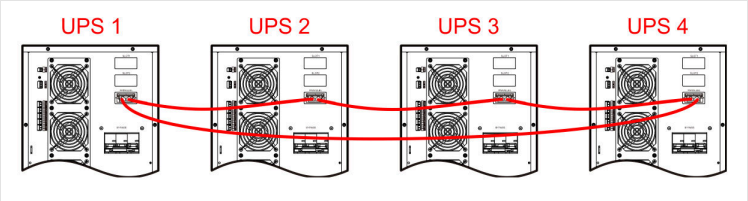

FIGURE 4-31 Parallel cables, four UPS

The two RJ45 parallel ports are identical and back each other up for reliability: connect both. The UPS alarms if one of them is not connected.

⚠ WARNING

- Make sure the parallel kit of every UPS is installed correctly (see the kit's installation guide).
- The wiring and phase sequence of every UPS must be exactly the same, so that the bypass supplies of the system are in phase.
- Every UPS of a parallel system must have the same number of battery modules.

CHAPTER 5

05 Touchscreen operation

The 4.3-inch color touchscreen: the main page, the information pages, login, every setting, the fault list, the buzzer and the on/off commands.

i NOTE The values in the screen pictures are examples; some pictures show 50 Hz readings. The touchscreen shows phase (line-to-neutral) voltages: 120 V on the screen is 208 V line-to-line, the voltage on the rating label.

⚠ CAUTION

The touchscreen gives access to the operating parameters of the UPS. Only designated, qualified personnel may change settings. If the meaning of a parameter is not clear, consult this manual or AEC; do not change parameters without authorization.

5.1 Menu structure

TABLE 5-1 Menu structure of the touchscreen

From the main page	Page	What it shows or sets
Bypass, Mains, Batt., Output icons	Bypass / utility / battery / output information	Voltage, current, frequency; battery voltage, currents, SOC, SOH, runtime, module data (Section 5.2.3)
Information management	Run info.	Utility, bypass, battery, output, rectifier and inverter status, mode, fans, temperature
	History record	Fault and alarm events
	User log	Operations performed
	Device info.	Product name, model, serial number, software versions
Settings (after login)	Sys. manage	Output, bypass and ECO settings
	Batt. manage	Module quantity, charge current, Li-batt. ON/OFF, forced charge, backup, insulation detection, SOC balance
	Battery test	Standard or deep test, cancel
	Dry contact	Function of the input and output dry contacts
	HMI set	Date, time, language, backlight, brightness, atmosphere light
	Password set	Login passwords
	Device config.	Mode set (parallel mode and ID, frequency converter, self-start, bypass functions, test load, battery type) and other set
	Dedust set	Fan dust-cleaning cycle
	Reco. manage	Export or clear the records
Current fault	Current fault	Active faults and alarms
Buzzer	—	Silence or re-enable the buzzer

From the main page	Page	What it shows or sets
Login	Login	User or administrator password
ON/OFF	Confirm to power on / off	UPS on or off

5.2 Main page

After power-up the touchscreen initializes and then shows the main page with the power path (topology) of the UPS.

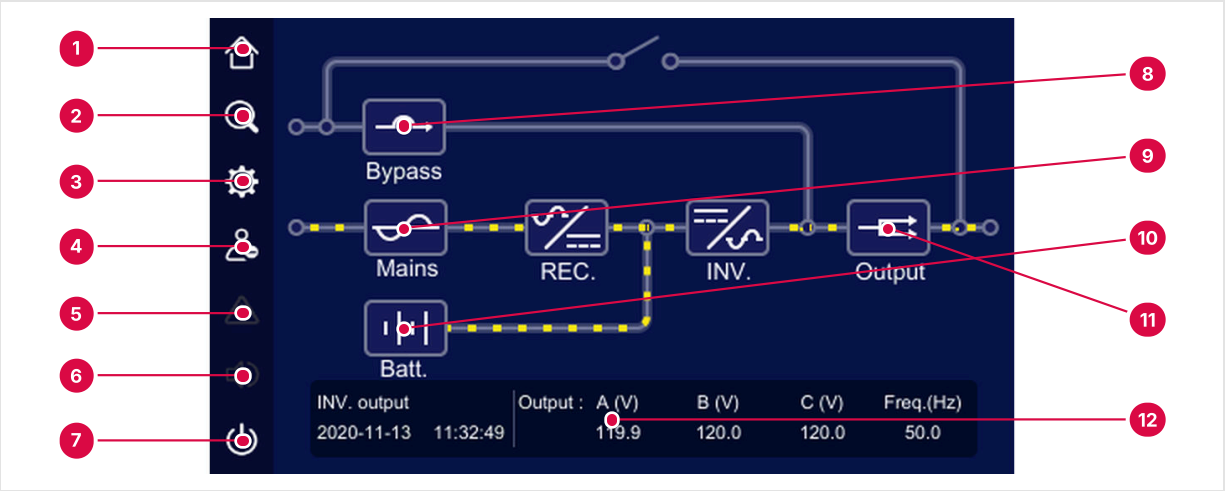

1. Home: back to the main page from any page
2. Information management (Section 5.4)
3. Settings management, after login (Section 5.5)
4. Login (Section 5.3)
5. Current faults: lit when a fault is active (Section 5.6)
6. Buzzer on/off (Section 5.7)
7. UPS on/off (Section 5.8)
8. Bypass: touch for the bypass information; red when the bypass is abnormal
9. Mains (utility input): touch for the utility information; red when abnormal
10. Batt.: touch for the battery information; red when abnormal
11. Output: touch for the output information; red when abnormal
12. State bar: operating mode, date and time, output phase voltages and frequency

FIGURE 5-1 Main page, normal mode

The touchscreen icons, in short:

TABLE 5-2 Touchscreen icons

Icon	Meaning
Home	Touch it on any page to return to the main page.
Information management	Run information, history record, user log, device information.
Settings management	All settings; reached after login.
Current faults	Lit when a fault is active; touch it to see the details.
Buzzer	Silences or re-enables the buzzer.
Login	Opens the login keypad.
ON/OFF	Turns the UPS on or off, after confirmation.

Icon	Meaning
Bypass · Mains · Batt. · Output	Information pages; the icon turns red when that part is abnormal.

5.2.1 Operating status

The animated power path (yellow "water lights") shows the six main states. Other states have their own indications.

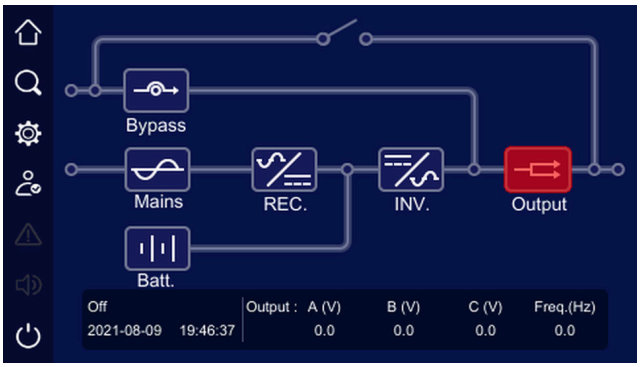

FIGURE 5-2 No power transfer

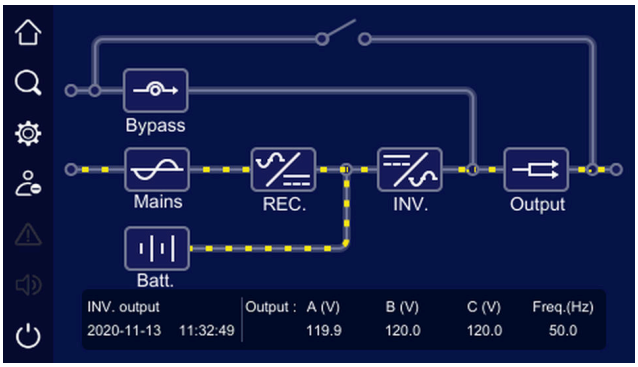

FIGURE 5-3 Utility normal, inverter (normal) mode

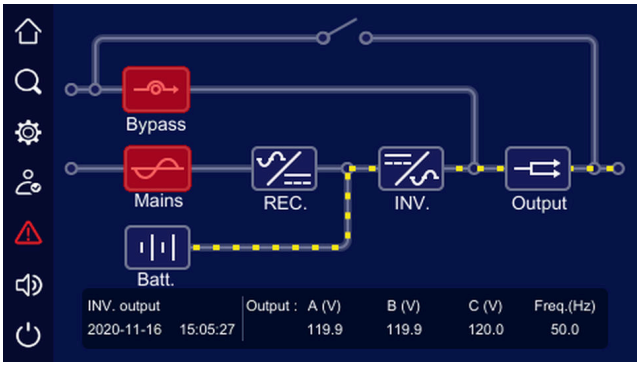

FIGURE 5-4 Utility abnormal, battery mode

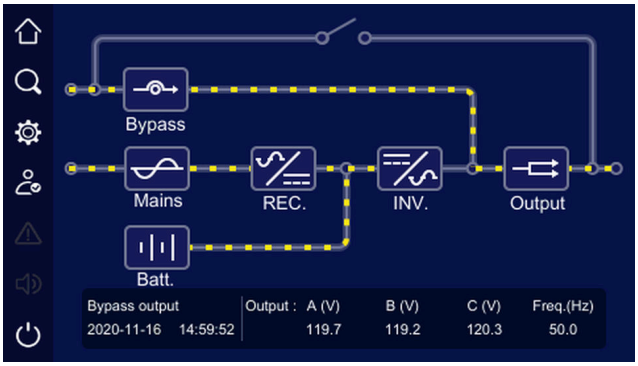

FIGURE 5-5 Bypass output

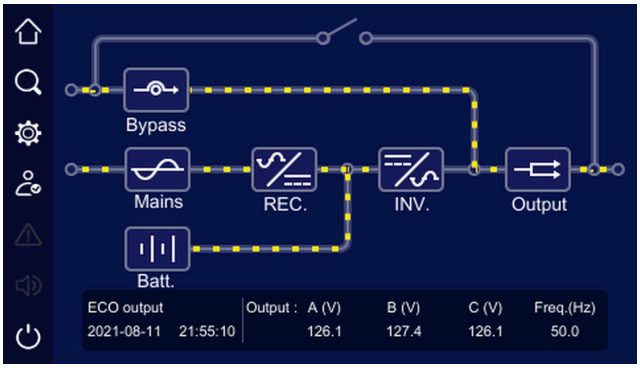

FIGURE 5-6 ECO output

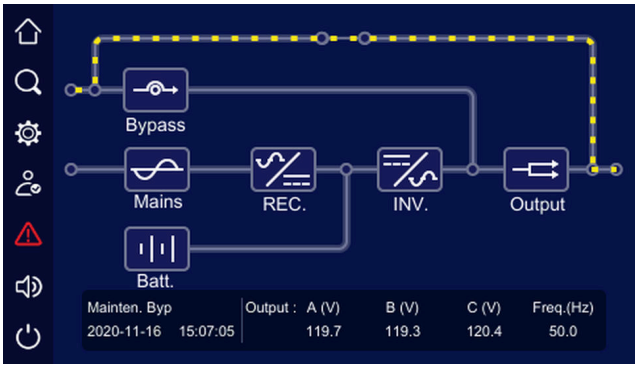

FIGURE 5-7 Maintenance-bypass output

5.2.2 Bypass, utility and output information

On the main page touch **Bypass** for the bypass information, **Mains** for the utility input and **Output** for the output: voltage, current, load, active and apparent power, power factor and frequency.

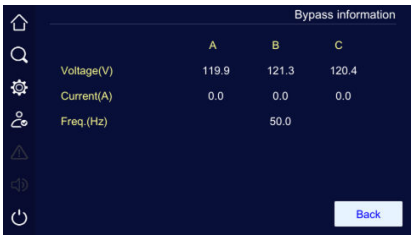

FIGURE 5-8 Bypass information

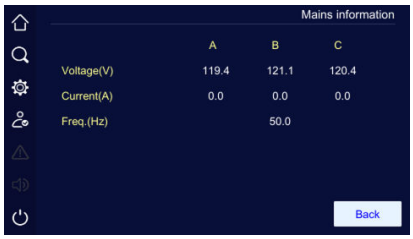

FIGURE 5-9 Utility (Mains) information

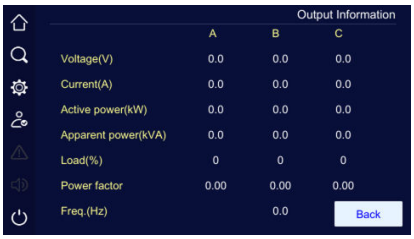

FIGURE 5-10 Output information

5.2.3 Battery information

On the main page touch **Batt.**. The **Batt. cab. info.** tab shows battery voltage, charge and discharge current, state of charge (SOC), state of health (SOH), battery status and remaining runtime.

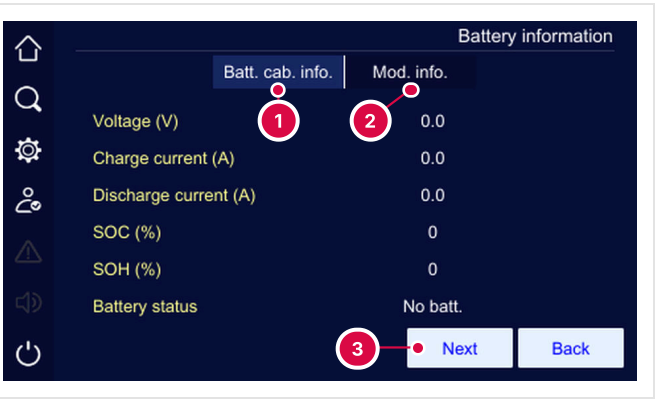

1. Batt. cab. info. tab
2. Mod. info. tab: data of each module
3. Next page

FIGURE 5-11 Battery information, page 1

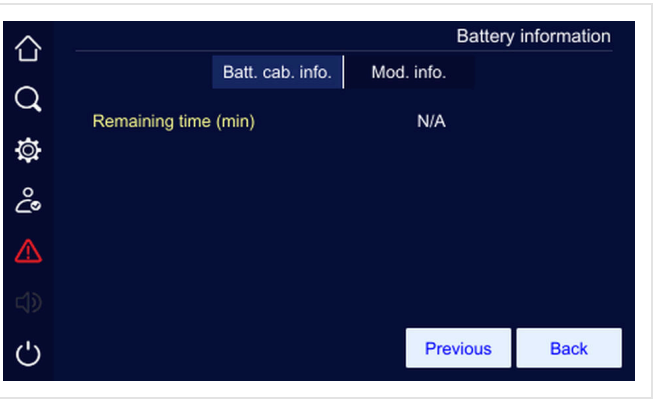

FIGURE 5-12 Battery information, page 2

The **Mod. info.** tab shows the status and data of each module. Select the module with the button at the lower left. The pages show pack voltage, temperature, SOC and SOH, total current, internal temperature, output voltage and current of routes 1 and 2, module on/off and charge/discharge status, module status, module disable test, positive and negative insulation resistance, operating time, and the maximum and minimum cell voltage and temperature.

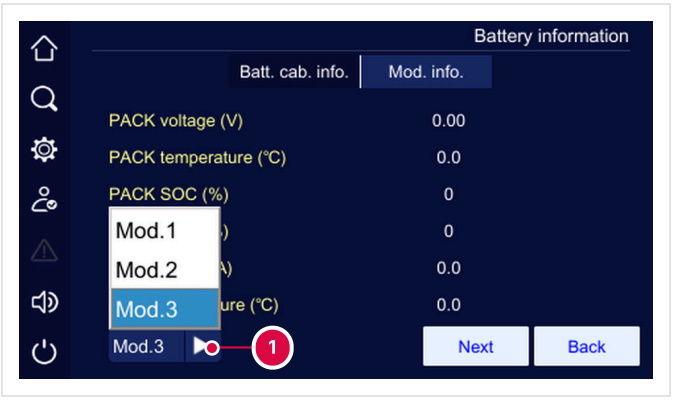

1 Module selector: Mod.1, Mod.2, Mod.3

FIGURE 5-13 Selecting a module

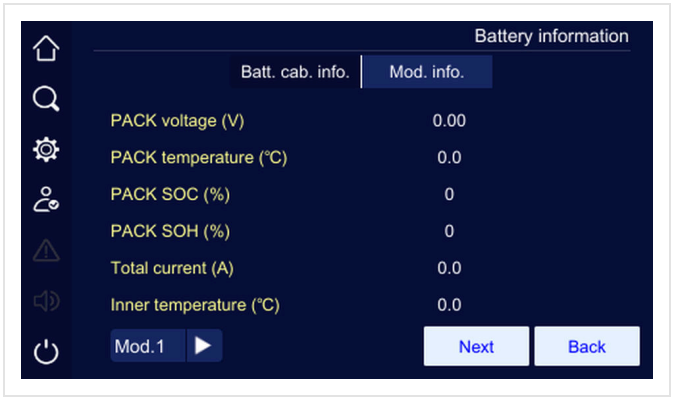

FIGURE 5-14 Module information, page 1

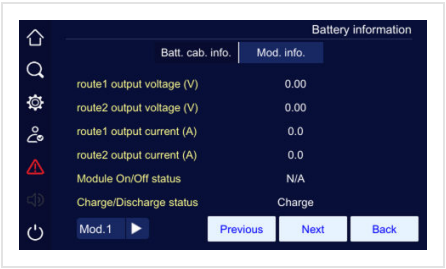

FIGURE 5-15 Module information, page 2

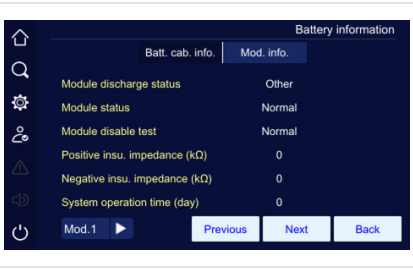

FIGURE 5-16 Module information, page 3

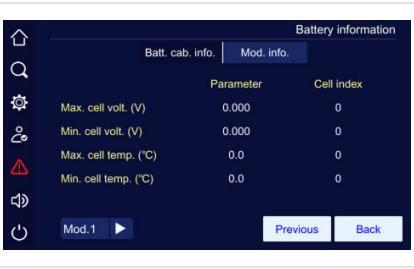

FIGURE 5-17 Module information, page 4

5.3 Login

On the main page touch **Login** to open the keypad. Type the password and touch **ENTER**. Settings can be changed only after login.

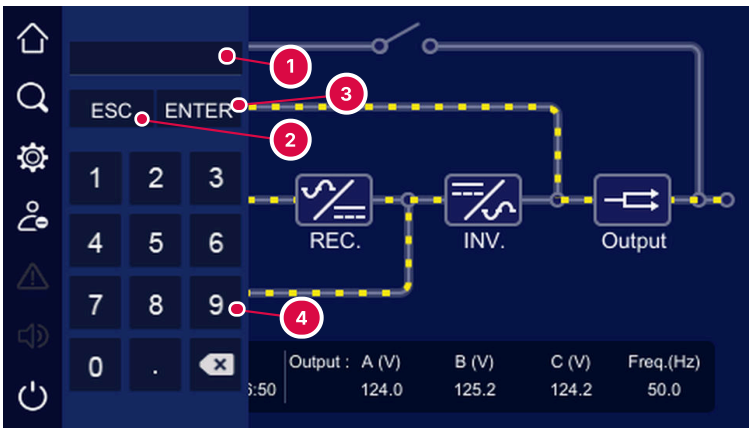

1 Password field

2 ESC: leave without login

3 ENTER: confirm

4 Keypad

FIGURE 5-18 Login page

i NOTE Default passwords: user **111** (view the settings only). The administrator password (view and change the settings) is given by AEC technical service. Change both at the first login, on the password page (Section 5.5.6), and keep them in a safe place. The factory service level is reserved to AEC service — call +1 786 553 2100.

5.4 Information management

On the main page touch **Information management**: run information, history record, user log and device information.

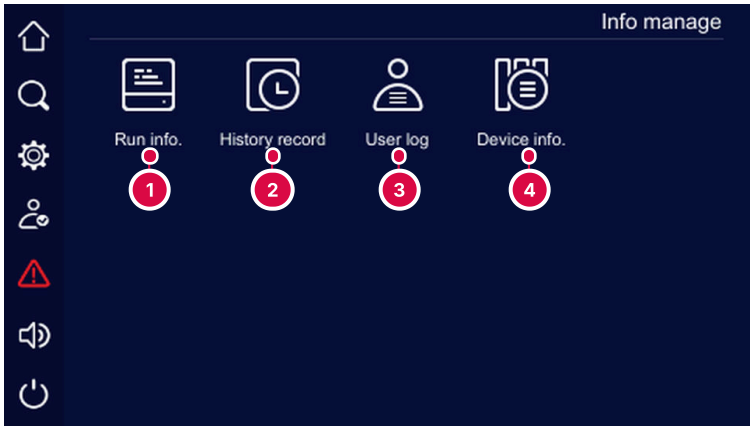

1. Run info.
2. History record
3. User log
4. Device info.

FIGURE 5-19 Information management page

5.4.1 Run information

Touch **Run info.** to see the present UPS status: utility, bypass, battery, output and load status, rectifier and inverter status, operating mode, input, bypass and battery circuits, fan status and internal temperature.

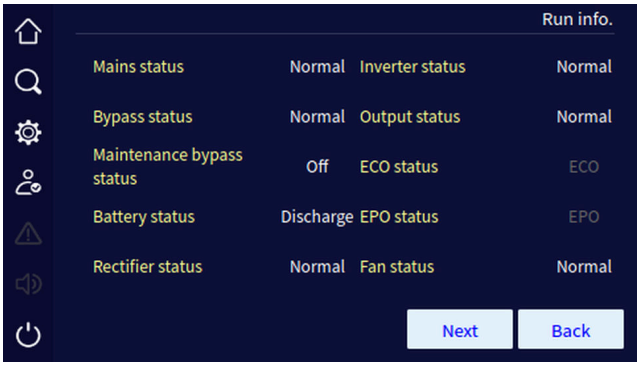

FIGURE 5-20 Run information, page 1

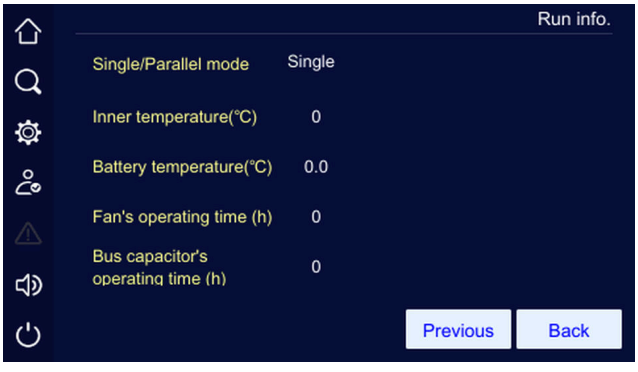

FIGURE 5-21 Run information, page 2

5.4.2 History record and user log

Touch **History record** to see the fault and alarm events, newest first. Touch **User log** to see the operations performed — on/off commands, changes of the input or bypass voltage settings, etc., newest first.

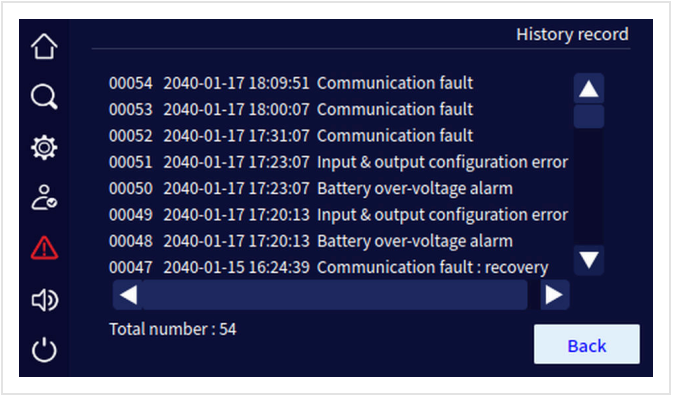

FIGURE 5-22 History record

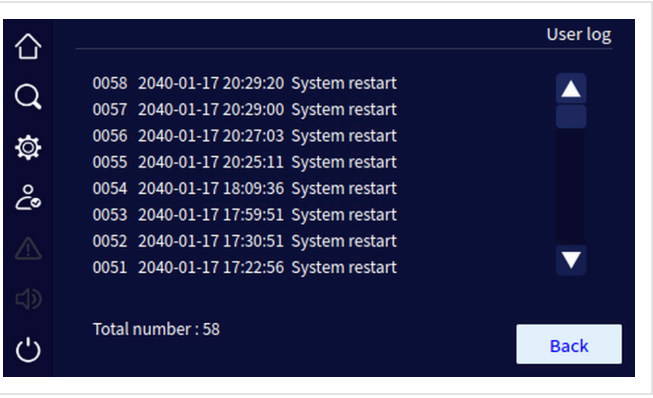

FIGURE 5-23 User log

5.4.3 Device information

Touch **Device info.** to see the product name and model, the serial number and the versions of the rectifier, inverter, system, protocol and touchscreen software, and of the battery-module controllers.

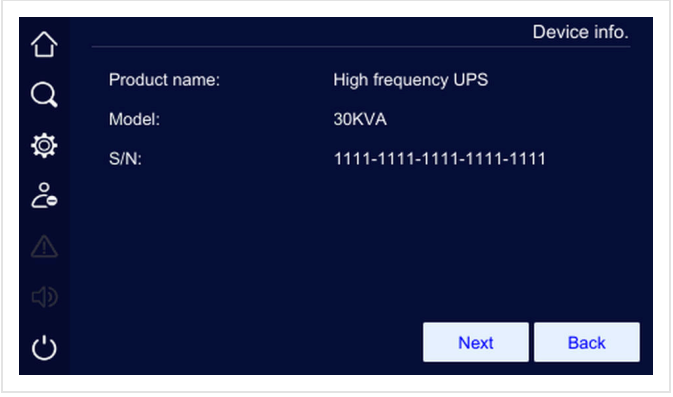

FIGURE 5-24 Device information, page 1

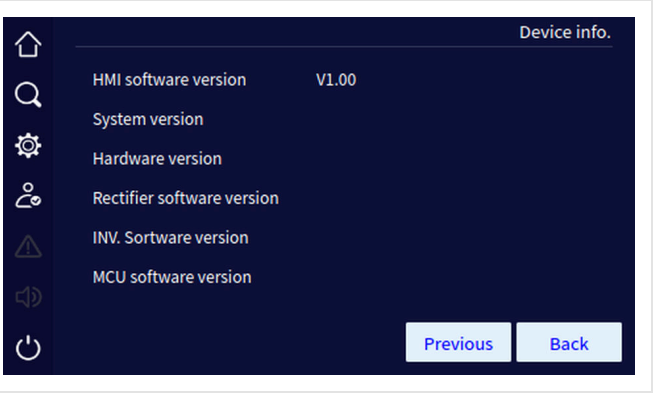

FIGURE 5-25 Device information, page 2

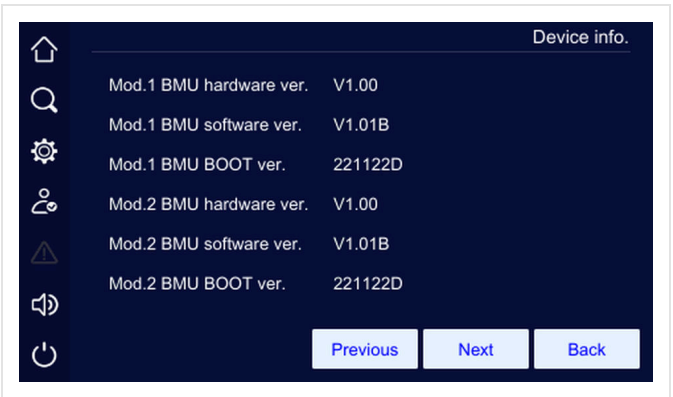

FIGURE 5-26 Device information, page 3

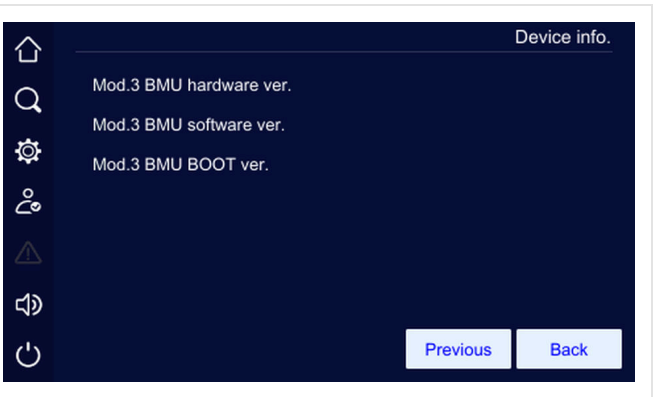

FIGURE 5-27 Device information, page 4

5.5 Settings

After login, touch **Settings management** on the main page.

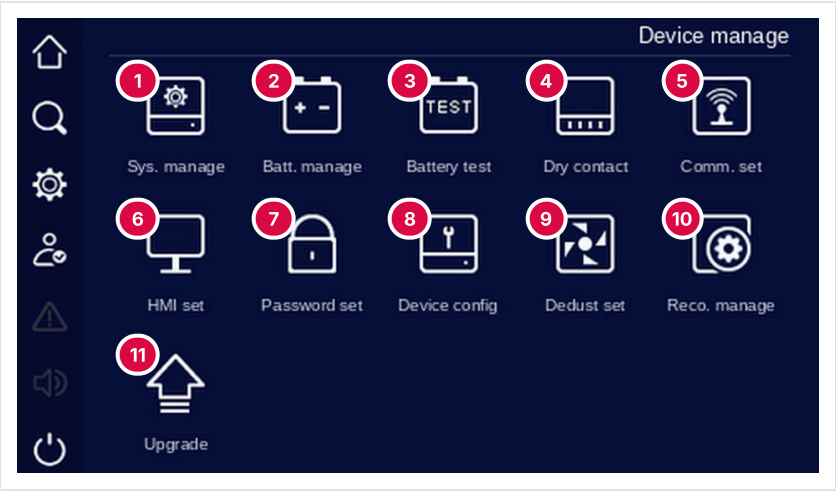

1. Sys. manage (Section 5.5.1)
2. Batt. manage (Section 5.5.2)
3. Battery test (Section 5.5.3)
4. Dry contact (Section 5.5.4)
5. Comm. set
6. HMI set (Section 5.5.5)
7. Password set (Section 5.5.6)
8. Device config. (Section 5.5.7)
9. Dedust set (Section 5.5.8)
10. Reco. manage (Section 5.5.9)
11. Upgrade

FIGURE 5-28 Settings page

i NOTE **Comm. set** and **Upgrade** are not described in this manual. Do not change them without AEC service.

How to change a value, on every settings page:

1. Touch the value field. For a number, the allowed range shows above the keypad; a value out of range is not accepted.
2. Choose or type the new value.
3. Touch **Save**. A green tick next to the parameter confirms the change (Figure 5-32); a red cross means it was not accepted (Figure 5-33).

5.5.1 System settings

Set the output voltage and frequency, the bypass voltage and frequency windows, ECO mode and the ECO windows (Table 5-3).

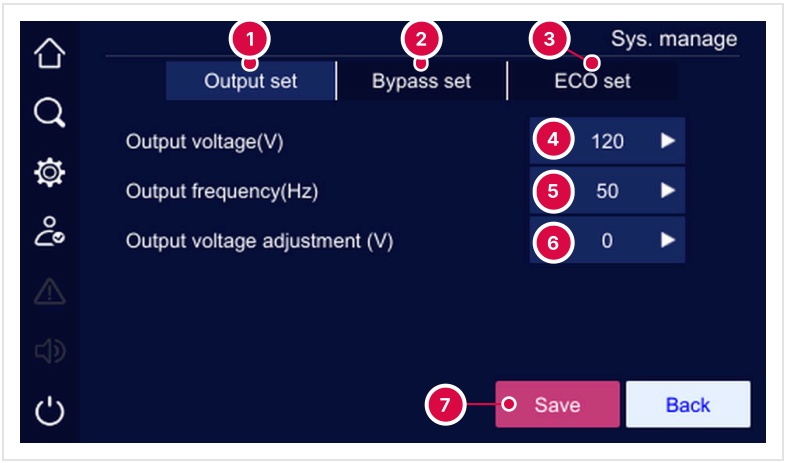

1. Output set tab
2. Bypass set tab
3. ECO set tab
4. Output voltage
5. Output frequency
6. Output voltage adjustment
7. Save

FIGURE 5-29 Output settings



FIGURE 5-30 Bypass settings



FIGURE 5-31 ECO settings

TABLE 5-3 System settings

Setting	Values
Output voltage	190, 200, 208, 220 V line-to-line (110, 115, 120, 127 V line-to-neutral)
Output frequency	50, 60 Hz
Output voltage adjustment	−5 to +5 V
Bypass upper voltage limit	+10, +15, +20 %
Bypass lower voltage limit	−10, −15, −20 %
Bypass frequency window	±5, ±10 %
ECO mode	On, Off

Setting	Values
ECO voltage window	±10, ±15 %
ECO frequency window	±5, ±10 %

i NOTE For US utility power use 208 V and 60 Hz. The 50 Hz setting is for a 50 Hz load or system only.



FIGURE 5-32 Setting accepted (green tick)



FIGURE 5-33 Setting not accepted (red cross)

5.5.2 Battery settings

On the **Batt. manage** pages set the number of lithium modules, the charge current, lithium battery on and off, forced charge on and off, the battery backup function, insulation detection and SOC balancing (Table 5-4).

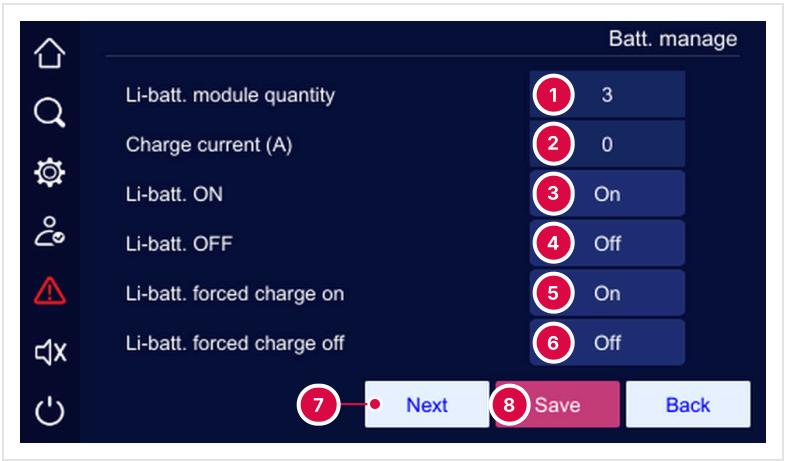

1. Li-batt. module quantity: the modules installed
2. Charge current
3. Li-batt. ON: switches all modules on (Section 5.8.2)
4. Li-batt. OFF: switches all modules off
5. Li-batt. forced charge on
6. Li-batt. forced charge off
7. Next page
8. Save

FIGURE 5-34 Battery settings, page 1

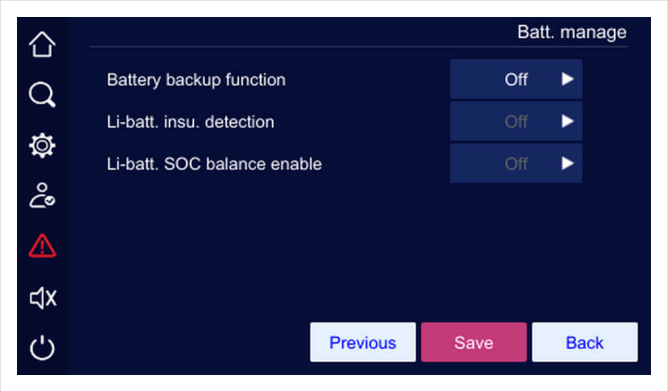

FIGURE 5-35 Battery settings, page 2

TABLE 5-4 Battery settings

Setting	Values
Li-batt. module quantity	1 to 3 — the number of modules installed
Charge current	2 to 40 A (default 20 A)
Li-batt. ON	On
Li-batt. OFF	Off
Li-batt. forced charge on	On
Li-batt. forced charge off	Off
Battery backup function	On, Off
Li-batt. insulation detection	On, Off
Li-batt. SOC balance	On, Off

⚠ CAUTION

Set **Li-batt. module quantity** to the number of modules really installed, every time you add or remove a module. A wrong quantity gives wrong runtime readings and a battery number mismatch in a parallel system.

5.5.3 Battery test

Run a standard or a deep battery test, or cancel a test in progress. The page shows the test status, battery current, consumed capacity and test time.

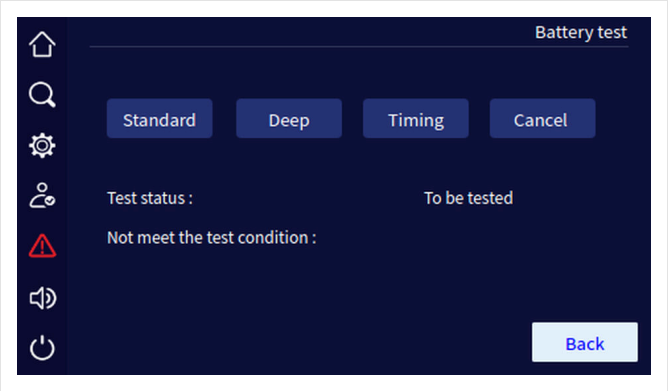

FIGURE 5-36 Battery test page

5.5.4 Dry contact settings

Touch **Dry contact** to set the function of each contact. All contacts are set the same way; dry contact 1 is shown.

- **Input dry contact:** touch the contact's button to open its options (Figure 5-38), choose the signal and the trigger level (NO/NC), touch **OK** to return, then **Save**.
- **Output dry contact:** touch the contact's button (Figure 5-40), choose the signal, touch **OK**, then **Save**.

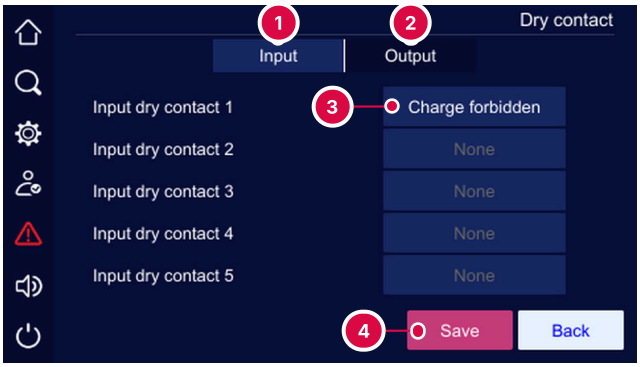

1. Input tab
2. Output tab
3. Dry contact 1: touch to choose its function
4. Save

FIGURE 5-37 Input dry contacts

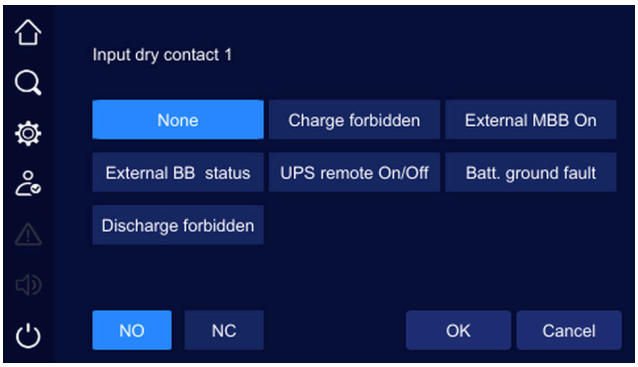

FIGURE 5-38 Input dry contact options

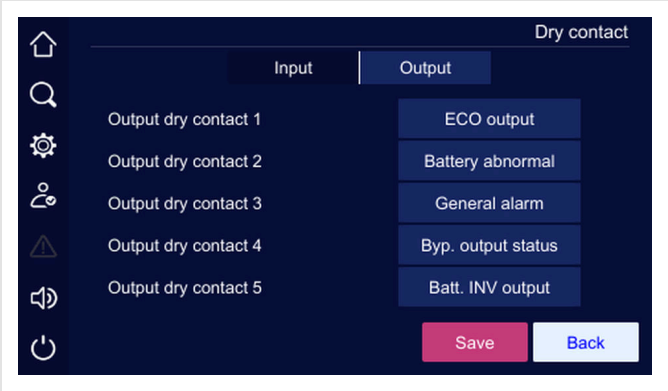

FIGURE 5-39 Output dry contacts

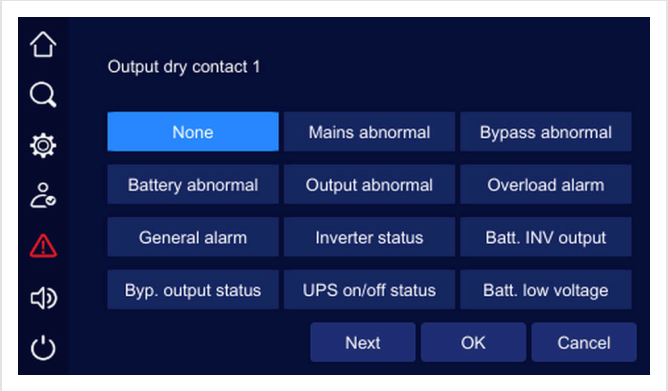

FIGURE 5-40 Output dry contact options

5.5.5 HMI settings

Set the date, time, language, backlight time and brightness, and the atmosphere light. Set the date and time at commissioning: they stamp every line of the history record and the user log.



FIGURE 5-41 HMI settings

5.5.6 Password

Touch **Password set** to change a login password: type the old password, the new password twice, then touch **Save**.

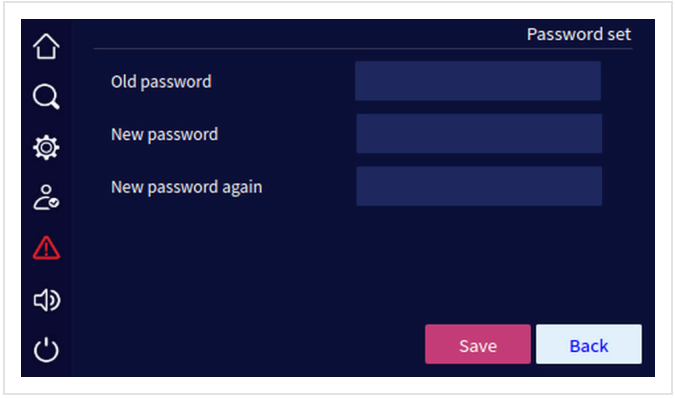

FIGURE 5-42 Password page

5.5.7 Device configuration

Touch **Device config.** to open the device configuration (Table 5-5). Change these settings only at commissioning.

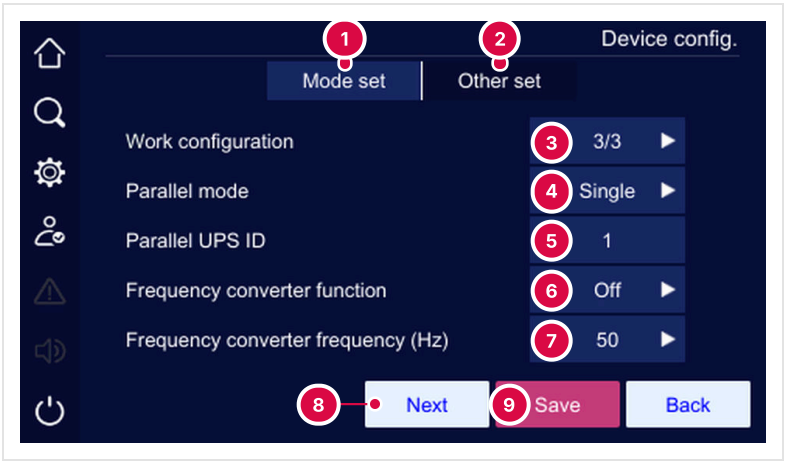

1. Mode set tab
2. Other set tab
3. Work configuration
4. Parallel mode: the same on every UPS
5. Parallel UPS ID: a different one on each UPS
6. Frequency converter function
7. Frequency converter frequency
8. Next page
9. Save

FIGURE 5-43 Mode settings, page 1

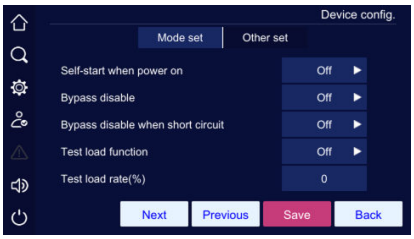

FIGURE 5-44 Mode settings, page 2

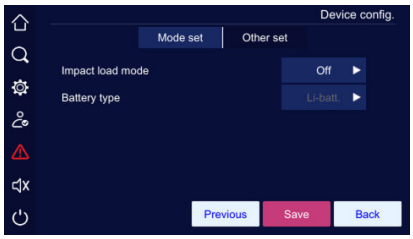

FIGURE 5-45 Mode settings, page 3

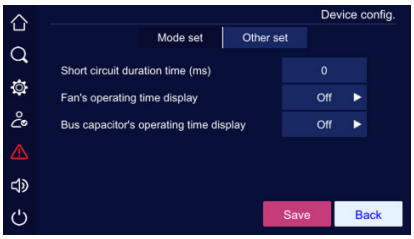

FIGURE 5-46 Other settings

TABLE 5-5 Device configuration

Setting	Values
Short-circuit duration	10 to 200 ms
Fan operating time display	On, Off
Bus capacitor operating time display	On, Off
Work configuration	3/3 (three-phase in, three-phase out)
Parallel mode	Single, Redundant, Expand, BSC
Parallel UPS ID	1 to 4
Frequency converter function	On, Off

Setting	Values
Frequency converter frequency	50, 60 Hz
Self-start at power-up	UPS will not turn off, On, Off
Bypass disable	On, Off
Bypass disable on short circuit	On, Off
Test load function	On, Off
Test load rate	10 to 100 %
Impact load mode	On, Off
Battery type	Li-batt.

5.5.8 Dedust

Touch **Dedust set** to start a standard or timed fan dust-cleaning cycle, or to cancel it.

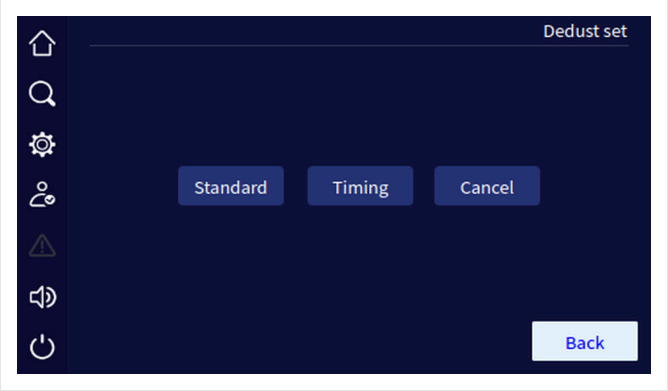

FIGURE 5-47 Dedust page

5.5.9 Record management

Export or clear the history record, the user log and the waveform captures. Insert a USB flash drive, then touch the disk icon to export the selected records, or the bin icon to clear them. A confirmation window appears before clearing. Page 2 holds the battery-module (PBMU) upgrade record.

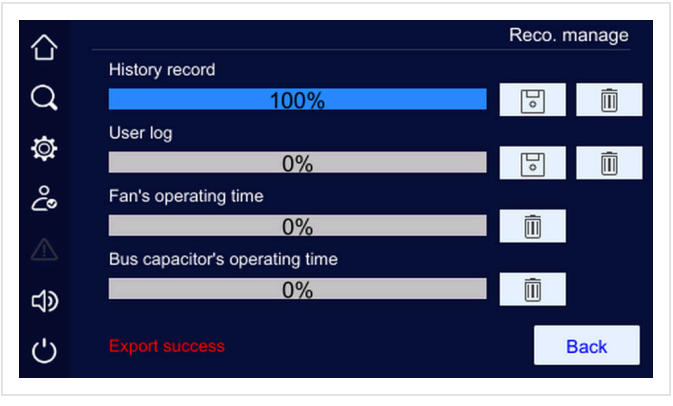

FIGURE 5-48 Records exported

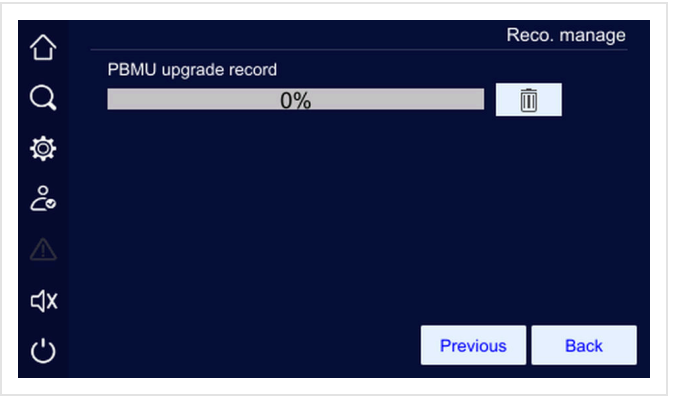

FIGURE 5-49 PBMU upgrade record

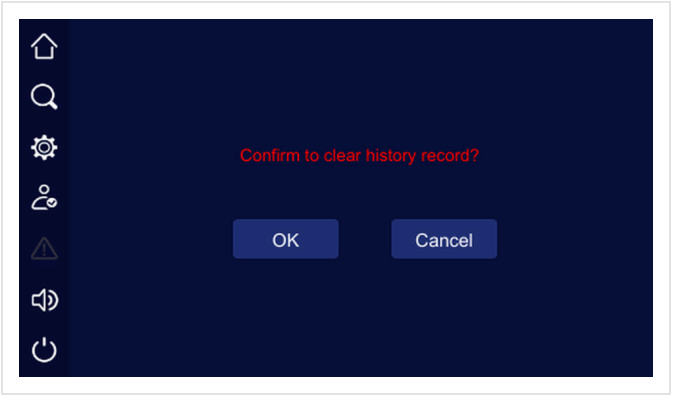

FIGURE 5-50 Confirm clearing the log

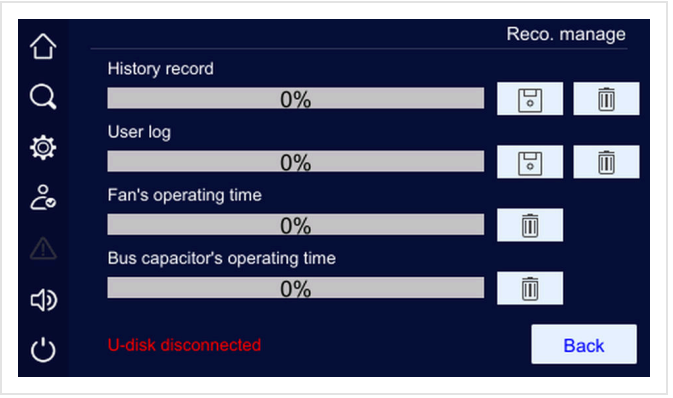

FIGURE 5-51 USB drive not inserted

5.6 Current faults

When the UPS has a fault, the current-fault icon lights (Figure 5-52). Touch it to see the active faults (Figure 5-53). The meaning of each fault is in Table 9-2.

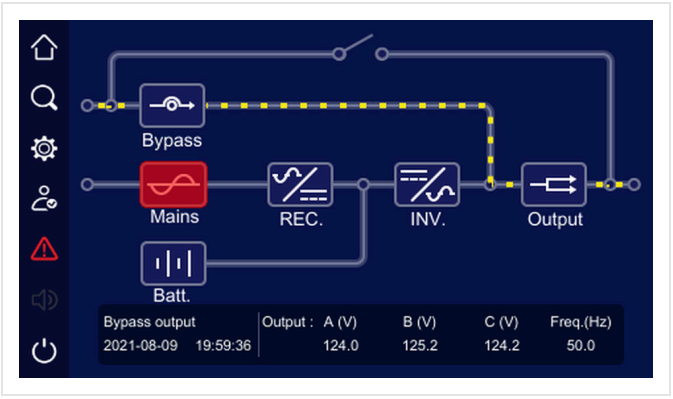

FIGURE 5-52 Fault alarm

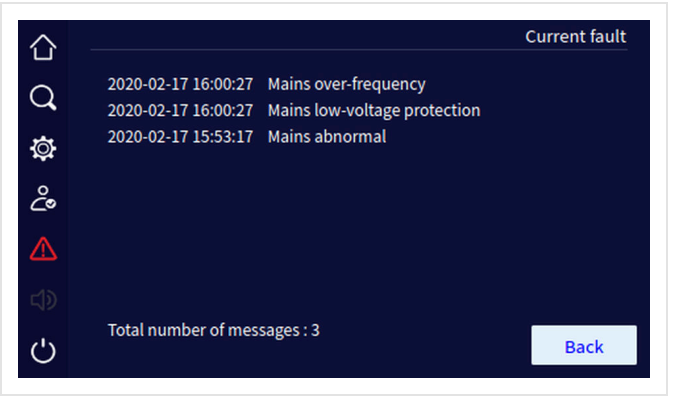

FIGURE 5-53 Active faults

5.7 Buzzer

When the UPS has a fault, the buzzer sounds. Touch the buzzer icon to silence or re-enable it; Figure 5-54 shows the buzzer silenced.

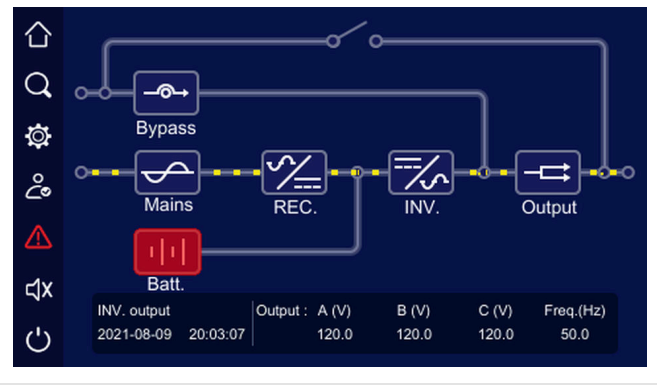

FIGURE 5-54 Buzzer silenced

i NOTE A continuous (long) beep cannot be silenced.

5.8 Turning on and off from the touchscreen

5.8.1 UPS on/off

On the main page touch **ON/OFF**. With the UPS off, the screen asks "Confirm to power on?"; with the UPS on, "Confirm to power off?". Touch **OK** to confirm or **Cancel**.

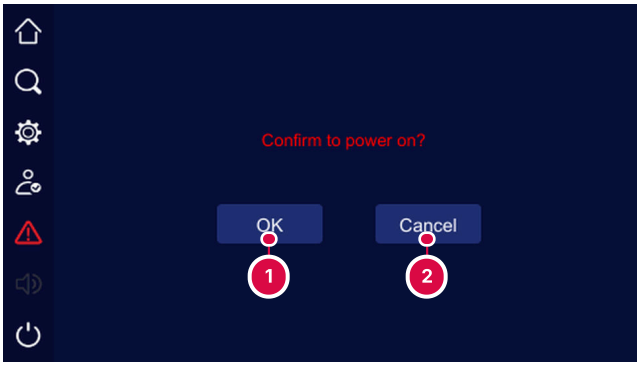

1. OK
2. Cancel

FIGURE 5-55 Confirm power on

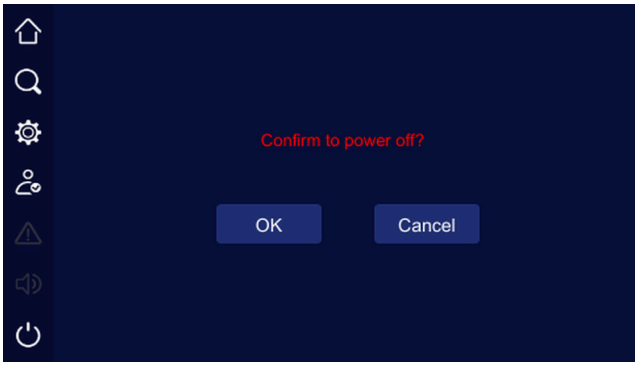

FIGURE 5-56 Confirm power off

5.8.2 Lithium battery on/off

The battery modules switch on automatically when powered. To switch them all off, set **Li-batt. OFF** to Off on the battery settings page (Figure 5-34) and confirm "Confirm to power off?" with **OK**. To switch them all on, set **Li-batt. ON** to On and confirm "Confirm to power on?" with **OK**.

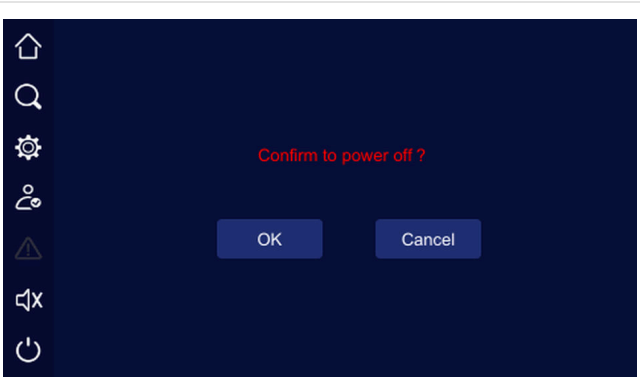

FIGURE 5-57 Confirm battery power off

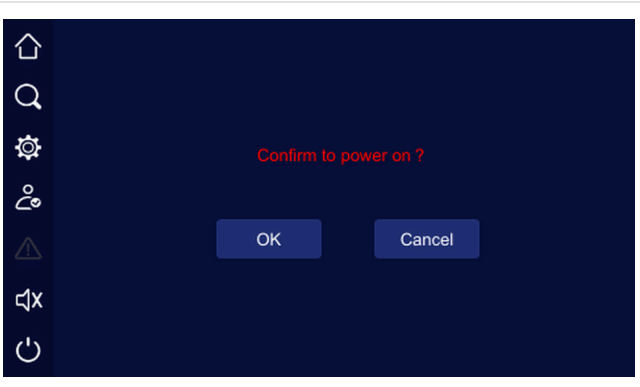

FIGURE 5-58 Confirm battery power on

06

CHAPTER 6

Operation

Checks before the first start, the breaker positions, starting and stopping, the maintenance bypass, the cold start, the EPO and parallel systems.

6.1 Before starting

- All connections are tight and the AC cable colors follow the specification.
- The UPS is properly grounded.
- The neutral-to-ground voltage is below 5 V AC.
- If a remote monitoring device is fitted, the RS-485 wiring is correct.
- The cables are routed neatly and tied according to good practice.
- The installation and wiring allow future changes, expansion and maintenance.
- The output has no short circuit and the load does not exceed the UPS rating.
- The maintenance-bypass cover is fitted and the maintenance-bypass breaker is OFF (Figure 6-1).
- The EPO input is shorted, or wired to a closed remote EPO switch (Section 2.9.3).

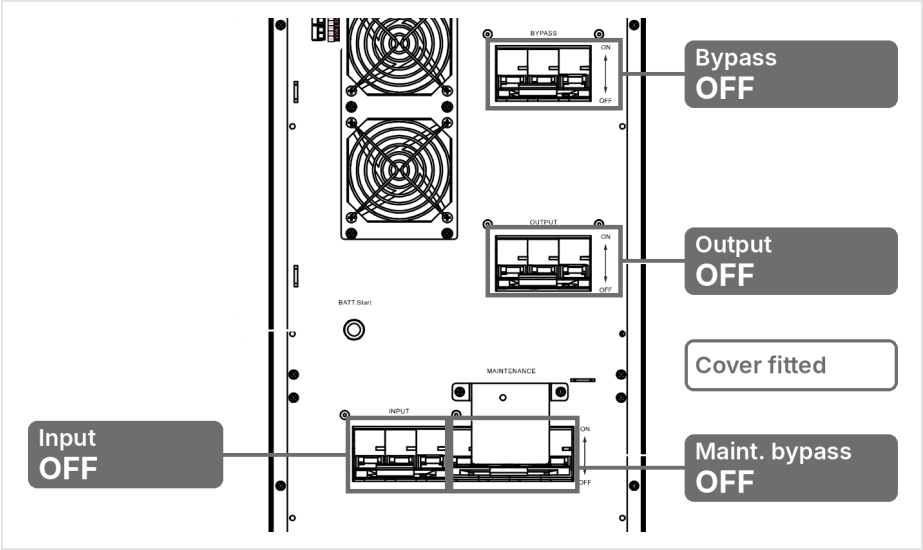

FIGURE 6-1 Breakers before start-up and after a full shutdown: all OFF, maintenance-bypass cover fitted

6.2 Starting the UPS

1. Close the INPUT and BYPASS breakers (Figure 6-2). The touchscreen lights, initializes and shows the bypass output (Figure 5-5).
2. Turn the knob of every battery module to the closed padlock (Section 2.8): all green run indicators light.
3. Press both ON keys under the touchscreen together for 1 s (Figure 2-4), or touch **ON/OFF** and **OK** (Section 5.8.1). The UPS starts.
4. Wait about 10 s. The main page shows normal mode (Figure 5-3).

5. At the first start: log in as administrator and check **Li-batt. module quantity** (Section 5.5.2) and the output settings (Section 5.5.1).
6. Close the OUTPUT breaker (Figure 6-3).
7. When the UPS is running steadily, switch on the loads.

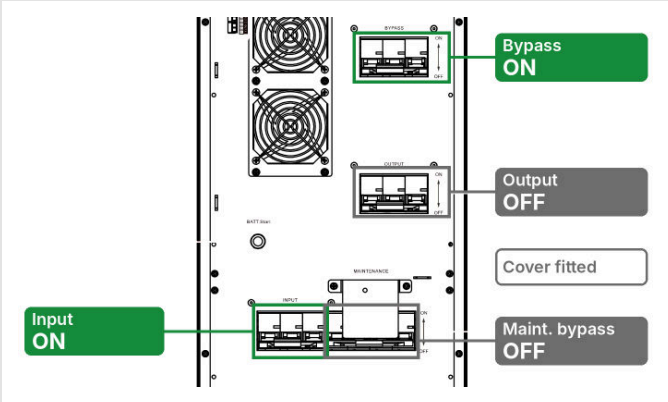

FIGURE 6-2 Start-up, step 1: INPUT and BYPASS ON

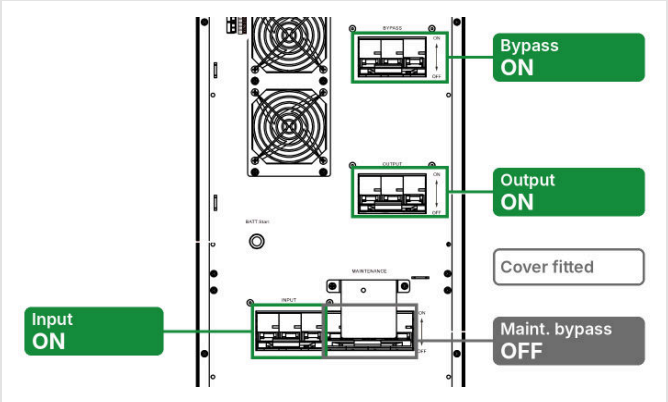

FIGURE 6-3 Normal operation: INPUT, BYPASS and OUTPUT ON, maintenance bypass OFF

⚠ CAUTION

Switch on the largest loads first and the smallest last, so that starting a large load does not trigger the overload protection.

6.3 Shutting down the UPS

1. Switch off the loads. Let the UPS run with no load for about 10 minutes to cool down.
2. Press both OFF keys together for 1 s (Figure 2-4). The UPS shuts down.
3. Turn the knob of every battery module to the open padlock: all module indicators go off.
4. Open the INPUT and BYPASS breakers (Figure 6-4).
5. To isolate the UPS completely, also open the OUTPUT breaker and the upstream breakers (Figure 6-1).

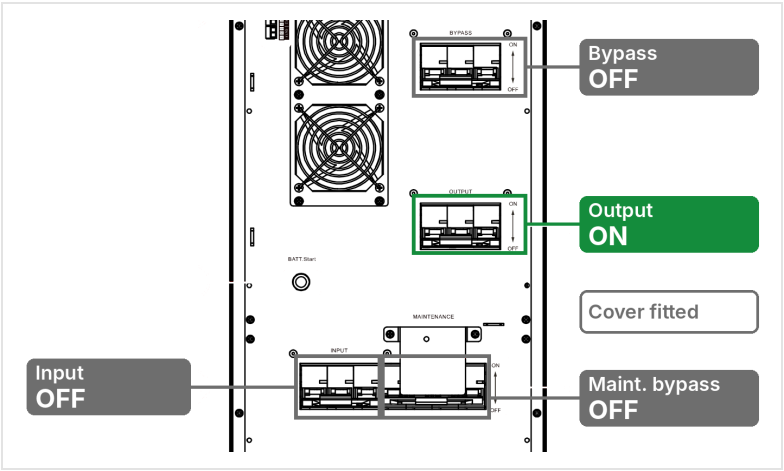

FIGURE 6-4 Shutdown, step 4: INPUT and BYPASS OFF

6.4 Maintenance bypass

Use the maintenance bypass to service the UPS without interrupting the load. The load then runs on unprotected utility power.

6.4.1 Transferring the load to maintenance bypass

1. Remove the cover of the maintenance-bypass breaker (item 14 in Figure 2-5). The door switch opens: the UPS turns its inverter off and transfers the load to bypass (Figure 6-5). Check that the main page shows the bypass output (Figure 5-5).
2. Close the MAINTENANCE breaker (Figure 6-6). The main page shows the maintenance-bypass output (Figure 5-7).
3. Open the INPUT, BYPASS and OUTPUT breakers (Figure 6-7). The load is now fed through the maintenance bypass; the UPS input and output are disconnected.
4. To service the UPS, also turn the knob of every battery module to the open padlock, and wait 10 minutes (Section 1.2).

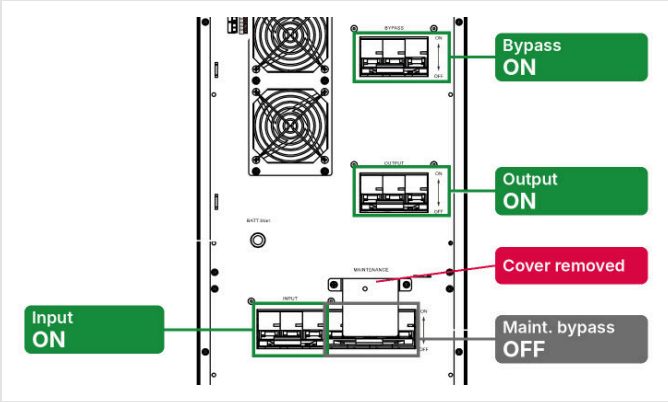

FIGURE 6-5 Step 1: cover removed, load on bypass

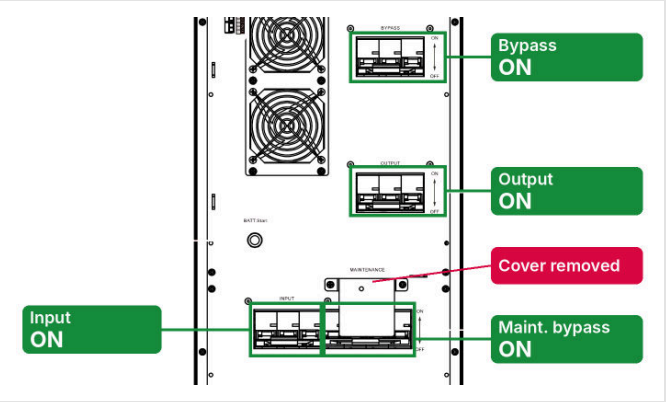

FIGURE 6-6 Step 2: MAINTENANCE ON

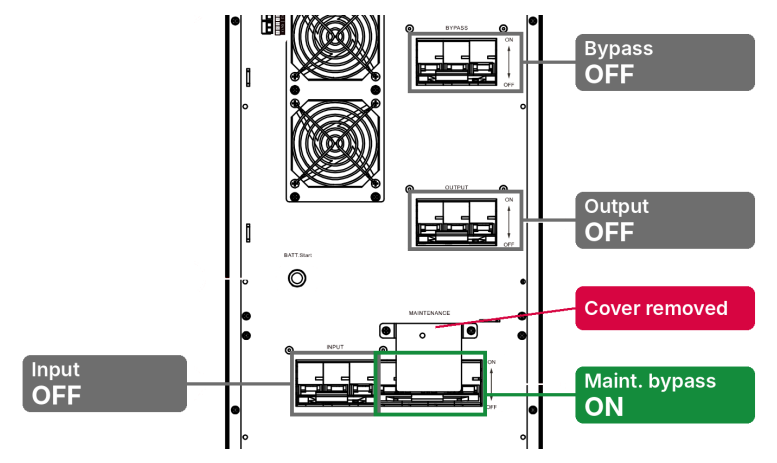

FIGURE 6-7 Step 3: INPUT, BYPASS and OUTPUT OFF — load on maintenance bypass

⚠ CAUTION

While you operate the maintenance-bypass breaker, do not operate the door switch (Figure 4-28).

6.4.2 Returning from maintenance bypass to inverter

1. Turn the knob of every battery module to the closed padlock.

2. Close the INPUT, BYPASS and OUTPUT breakers, in that order (Figure 6-6).
3. When the UPS is powered and the touchscreen shows the bypass output voltage, open the MAINTENANCE breaker (Figure 6-8).
4. Refit the cover of the maintenance-bypass breaker (Figure 6-3).
5. Press both ON keys to start the inverter. The main page shows normal mode (Figure 5-3).

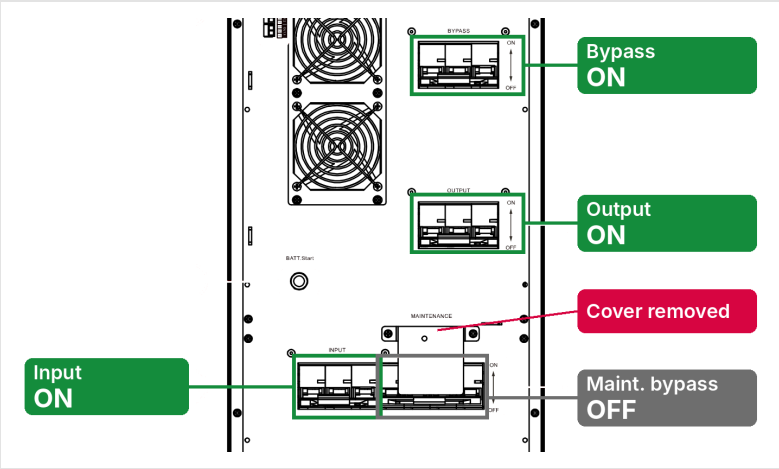

FIGURE 6-8 Return, step 3: MAINTENANCE OFF; then refit the cover

6.5 Cold start from the battery

Use the battery start when there is no utility power, to start the UPS from the battery.

1. Turn the knob of every battery module to the closed padlock.
2. Press the BATT. Start button on the rear panel (item 4 in Figure 2-5) and wait for the buzzer to sound for 7 s. The UPS powers its control circuits from the battery.
3. Press both ON keys together for 1 s. The UPS starts on battery (Figure 5-4).

i NOTE Battery start works only when there is no utility power.

6.6 Emergency power off (EPO)

Press the EPO button on the operation panel (Figure 2-4), or open the remote EPO contact (Section 2.9.3): the UPS cuts its inverter and bypass outputs at once, the buzzer gives a long beep and the touchscreen reports an EPO fault (Table 9-2). The load loses power.

To restart after an EPO: remove the cause, release the EPO button or close the EPO contact again, let the UPS shut down completely, then start it as in Section 6.2.

6.7 Parallel system

6.7.1 Starting a parallel system

> **⚠ CAUTION**
>
> Make sure every UPS has the parallel kit and is set to the same parallel mode, with a different Parallel UPS ID on each unit (Section 5.5.7). Do not connect any load until the whole system has started, and make sure all UPS breakers are open before you begin.

1. Check that every UPS is installed correctly (Section 4.8.3). Then start each UPS in turn as in Section 6.2, steps 1 to 4.
2. When every UPS is on inverter, measure the inverter voltage of each one: the difference between the highest and the lowest must be within 8 V.
3. Close the OUTPUT breakers and measure the circulating current between the units: it must be below 3 A.
4. Close the main output breaker and each output branch breaker, then switch on the loads one at a time.

If the voltage difference exceeds 8 V, check that every output reads 120 V line-to-neutral; if the difference exceeds 15 V, contact AEC service. A high circulating current causes inverter faults: if it exceeds 3 A, contact AEC service.

6.7.2 Shutting down a parallel system

Avoid starting and stopping a parallel system frequently.

1. Switch off all loads.
2. Shut down the UPS units one at a time (Section 6.3).
3. Open the breakers of each UPS. In daily use the breakers can stay closed.

6.7.3 Removing a UPS from a parallel system

If one UPS of a parallel system fails, it leaves the system automatically and alarms. To isolate it completely for live maintenance or replacement:

1. Shut down the faulty UPS as in Section 6.3.
2. Open the input, bypass, battery and output breakers that connect to the faulty UPS.

> **⚠ CAUTION**
>
> While the parallel system is running normally, do not disconnect a UPS output from the system before that UPS has been shut down: the supply to the load could be disturbed.

6.7.4 Redundancy

In an N+1 redundant system the total load must not exceed N times the rating of one UPS. If one UPS fails, it can leave the system or rejoin it without affecting the load, which increases reliability. When the load exceeds N times the rating of one UPS, each UPS loaded above N/(N+1) of its rating raises an overload alarm. Example: in a 1+1 system, a UPS loaded above 50 % of its rating raises an overload alarm.

CHAPTER 7

07 Network monitoring

The AEC SNMP-L card in an intelligent slot, its web page and the AEC monitoring and shutdown software.

7.1 The SNMP-L card

The AEC SNMP-L card puts ETHERNO on your network: its own web page in any browser, SNMP V1/V2c/V3 with the standard RFC 1628 UPS MIB, and e-mail alarms. It fits SLOT1 or SLOT2 at the top right of the rear panel (items 6 and 7 in Figure 2-5).

1. Fit the card and connect it to your network with an RJ45 cable.
2. On a Windows PC in the same network, install the AEC card search program from the AEC app (**Support › Downloads › SNMP › SNMP-L**) and press **Search**: the card appears at its factory address 192.168.0.100.
3. Select the card › **Network** › **Use Following Static IP**: give it a free address of your network, its netmask and gateway (ask your IT department). The card does not work at the factory address.
4. Open the card's web page and log in with the user name **admin** and the password given by AEC technical service. Change the password at the first login.
5. **Setting › Serial port setting**: interface RS-232, baud rate 9600, 8 data bits, 1 stop bit, no parity, on COM1 and COM2.
6. **Management › Device management › Network adapter › Power › UPS** › **Edit**: select the AEC three-phase UPS protocol (the ETHERNO entry) and enter the UPS data from its rating label. The card communicates only after steps 5 and 6.
7. **Home** shows the UPS values: the card reads the UPS. Then set the e-mail alarms (**Management › Alarm management**).

7.2 AEC monitoring software

TABLE 7-1 AEC monitoring programs (license-free)

AEC program	What it does
Card search and network set-up	Finds AEC SNMP cards on the network and sets their IP address (steps 2–3 above).
Multi-UPS monitoring	Watches one or many UPS (up to 1,000) from a Windows PC: live data, events, e-mail and audible alerts, a site map.
Safe shutdown	Runs on a PC or server fed by the UPS and shuts it down safely before the battery runs out. With a lithium UPS, use the utility-fail and UPS-fail timers, not the battery-low time.

✓ TIP Step-by-step instructions for every web page, SNMP and the programs: AEC SNMP-L Network Card User Manual, in the AEC app (**Support › Downloads › SNMP › SNMP-L**).

CHAPTER 8

08 Maintenance

Maintenance safety, the maintenance schedule, component life, care of the lithium modules and replacing a module.

8.1 Maintenance safety

Correct maintenance keeps the lithium battery system working at its best and extends its life.

DANGER

- Hazardous voltage is present inside the lithium battery system even when it is not operating. Before maintenance, check with a meter that it is completely shut down and safe.
- Remove rings, watches and other conductive objects.
- Follow the safety rules strictly. If in doubt, ask a person familiar with lithium battery systems.

8.2 Preventive maintenance

To keep the UPS efficient and reliable:

- Keep the room clean, free of dust and chemical pollution.
- Clean the UPS with a dry cloth, with the UPS shut down. Never use liquid or spray cleaners.
- Check the cooling fans and keep the air inlets and outlets clear. Have a damaged fan repaired or replaced promptly.

TABLE 8-1 Maintenance schedule

Interval	Task
Weekly	Look at the touchscreen: normal mode, no alarm, load within the rating.
Monthly	Check that the vents are clear and the fans run; check the room temperature (32–104 °F / 0–40 °C).
Every 6 months	Check that the input and output cable terminals are tight and show no sign of heating. Check the SOC and SOH of every module (Section 5.2.3) and that the battery charges with no alarm. Run a battery test (Section 5.5.3).
Yearly	AEC service: inspection of the power connections, fans, capacitors and firmware.
After any alarm	Read the history record (Section 5.4.2) and look the fault up in Table 9-2; call AEC support if it persists.

8.3 Component life

TABLE 8-2 Typical service life at 77 °F (25 °C)

Component	Typical life	Action
Cooling fans	5–7 years	Replaced at the end of the period or when an alarm reports them.
DC bus electrolytic capacitors	7–10 years	Replaced by AEC service.
AC filter capacitors	5–7 years	Replaced by AEC service.
Lithium (LiFePO4) modules	15 years design life	Monitored by the battery management system; replaced by AEC service when the capacity (SOH) has dropped.

Life is shorter at higher temperature, in dusty rooms and under continuous heavy load. The figures are typical for online UPS; AEC service plans replacement during preventive maintenance.

8.4 Care of the lithium modules

- **First use:** start the UPS and let it charge the battery. The UPS can be used while charging, but if the utility fails during this first charge the runtime may be shorter than rated.
- **Long periods without use:** charge the system or the modules according to their state of charge (SOC), shown in the battery information (Section 5.2.3):

TABLE 8-3 Charging schedule for modules not in use

State of charge	Charge
SOC ≤ 10 %	Immediately
10 % < SOC < 40 %	Every month
40 % ≤ SOC < 80 %	Every 3 months
80 % ≤ SOC ≤ 100 %	Every 6 months

- Clean the module cases with a cloth. Never use oil or organic solvents such as gasoline or thinner.
- Keep the modules away from flames and from equipment that can produce sparks, to prevent explosion.
- If the lithium battery system will be out of service, turn the module knobs to the open padlock, to prevent a long discharge that could damage the battery.

8.5 Replacing a module

⚠ *WARNING*

- Do not dispose of a battery module in fire: it can explode.
- Do not open or disassemble a module, especially its cells: risk of electric shock and burns.
- Recycle lithium modules according to the applicable laws and regulations.
- Hazardous voltage can be present at the module output connector. Check for voltage before you touch it.

If one module fails, the system isolates it automatically and normally keeps running with less battery capacity. To replace it:

1. Open the front door. Identify the faulty module: its red fault indicator is on (Figure 2-8), or **Mod. info.** shows it (Section 5.2.3).
2. Turn its knob to the open padlock: the module switches off and is unlocked.
3. Unplug its battery plug-in.
4. Remove the screws and pull the module out with two people (81.6 lb / 37 kg).
5. Install the new module as in Section 4.7, steps 4 and 5, and plug in its plug-in.
6. Turn its knob to the closed padlock and check that its green run indicator lights.
7. Check **Li-batt. module quantity** (Section 5.5.2).

Keep the knob of a removed module on the open padlock. To ship a module, pack it in its original packaging, at 20–50 % state of charge, or contact AEC.

09

CHAPTER 9

Troubleshooting

Common problems and what to do, and the fault messages with their buzzer signals.

9.1 Common problems

Table 9-1 covers common problems only. If in doubt, contact AEC service.

TABLE 9-1 Troubleshooting

Symptom	Possible cause and remedy
Utility power is normal and the UPS starts, but it runs on battery and the buzzer beeps intermittently.	Check the contactors and terminals of the input circuit. Check on the touchscreen whether the utility voltage or frequency is outside the UPS input range. Check whether the input breaker is open; if so, close it.
Applying power after installation blows a fuse or trips a breaker.	Short circuit in the UPS input or output wiring.
The touchscreen and output are normal, but the output stops as soon as a load is connected.	Severe overload or short circuit on the output: reduce the load or find the short circuit (often a faulty power strip or a damaged load). Or the loads were not switched on largest first: restart the UPS and, when it is steady, switch on the largest loads first.
Long beep, fault indicator on, UPS on bypass, inverter fault.	Output overload — the load exceeds the UPS rating: reduce it or use a larger UPS (a short transfer to bypass when a load starts, which clears by itself, is normal). Or over-temperature protection: check that the air inlets and outlets are clear and the room temperature is within range.
The UPS normally works, but on a utility failure it does not go to battery, or goes to battery and shuts down on low battery almost at once.	Modules with lost capacity: check their SOH and replace them. Charger fault: the battery is not being charged. Module plug-in loose or bad contact.
With computer loads, everything works, but on a utility failure the computers hang although the UPS keeps running.	Poor grounding: the neutral-to-ground voltage is too high.
The module quantity on the touchscreen differs from the modules installed.	The module quantity setting does not match the installed modules — correct it (Section 5.5.2).
Utility power is normal and module SOC is below 80 %, but the modules do not charge.	The UPS charging voltage is outside the allowed range. Module plug-in loose. Lithium battery switched off (Section 5.8.2).
The lithium battery system goes into protection as soon as it starts discharging.	The load exceeds the rated output of the battery system: reduce the load or add modules. Or the system has not been charged for a long time and its SOC is low, or it is damaged.
The battery system runs normally on battery, then shuts down after a while.	Normal: the discharge has ended and low-voltage protection has shut the system down. When utility power returns, the system restarts and recharges automatically.
The red indicator of a lithium module is on.	Low-SOC protection; operating temperature out of range or module fan not running; module fault — replace the module (Section 8.5).

9.2 Fault messages and buzzer signals

TABLE 9-2 Fault messages and buzzer signals

No.	Fault	Buzzer	Meaning and action
1	EPO	Long beep	Emergency power off active: bypass and inverter outputs are off (Section 6.6).
2	Mode fault	Long beep	The system mode setting does not match the actual wiring: check the utility or bypass wiring and make the system match the set mode.
3	Maintenance bypass fault	Long beep	Maintenance-bypass protection, inverter output off: check the maintenance-bypass cover and door switch, and the maintenance-bypass detection port on the backplane.
4	Output fault	Long beep	Output fault: check the output for a short circuit or overload.
5	Mode mismatch	Long beep	The input/output mode of this UPS does not match the parallel system.
6	Voltage mismatch	Long beep	The output voltage of this UPS does not match the parallel system.
7	Frequency mismatch	Long beep	The frequency of this UPS does not match the parallel system.
8	Bypass mismatch	Long beep	The bypass voltage or frequency of this UPS does not match the parallel system.
9	Pattern mismatch	Long beep	The parallel mode setting of this UPS does not match the parallel system.
10	Power mismatch	Long beep	The output power setting of this UPS does not match the parallel system.
11	Battery number mismatch	Long beep	The battery module quantity of this UPS does not match the parallel system.
12	Parallel mismatch	Long beep	The parameter settings of this UPS do not match the parallel system.
13	Short mismatch	Long beep	The "transfer to bypass on short circuit" setting of this UPS does not match the parallel system.
14	Two-ended fault	Long beep	Both ends of the parallel cable disconnected.
15	Single-ended fault	Slow beep	One end of the parallel cable disconnected.
16	Auxiliary power supply failure	Long beep	Internal power supply failure. If it does not recover by itself, contact AEC service.
17	Fan failure	Rapid beep (about every 0.2 s)	Fan fault warning: check the fans for damage or blockage.
18	CAN fault	Slow beep (about every 2 s)	Parallel communication fault: check the parallel cables for damage, or whether only one UPS of the system is running.
19	SCI fault	Long beep	Internal communication fault. If the alarm persists, contact AEC service.
20	No redundancy in the parallel UPS	Slow beep (about every 2 s)	The total load of the parallel system exceeds the full load of one UPS: the load is above the redundancy limit.
21	Mains abnormal (utility abnormal)	Long beep 3 beeps every 10 s	Long beep: utility input phase sequence wrong — check the input wiring. 3 beeps every 10 s: utility input missing neutral, power failure, overvoltage, undervoltage, over- or under-frequency — check the utility input.

No.	Fault	Buzzer	Meaning and action
22	Bypass abnormal	Slow beep (about every 2 s)	In normal mode the bypass voltage, frequency or phase sequence is abnormal, or the mode setting does not match the wiring. Check that the bypass breaker is closed, the bypass phase sequence, and that the bypass wiring matches the system mode.
23	Battery abnormal	Slow beep (about every 2 s) Rapid beep (about every 0.2 s) No beep	Slow beep: battery overvoltage protection, charging fuse failure or overvoltage alarm — check the battery. Rapid beep: battery wiring fault, charger short circuit, undervoltage protection or undervoltage warning — check the module plug-ins and the battery status. No beep: battery charging temperature too high.
24	Rectifier abnormal	Rapid beep (about every 0.2 s)	Rectifier fault. Contact AEC service.
25	Inverter abnormal	Long beep	Inverter fault. Contact AEC service.

i NOTE

- The buzzer signals above apply with the UPS on and the buzzer not disabled. With the UPS off, or with the buzzer disabled, the messages appear on the touchscreen without sound.
- If one battery module fails, it is isolated from the system automatically. Normally the system keeps running, with less battery capacity. Switch the faulty module off, remove it (Section 8.5) and call AEC service.

CHAPTER 10

10 Packaging, transport and storage

How ETHERNO is packed, and how to move and store it and its lithium modules safely.

10.1 Packaging

Keep the package in the orientation it shows. The sides of the package carry handling symbols (keep dry, fragile, this way up, etc.) and the model; the front carries the product name.

10.2 Transport

Observe the handling symbols and avoid hard impacts. Keep the package in the marked orientation to protect the components. Do not ship flammable, explosive or corrosive materials with the UPS. Do not leave it in the open during transport: protect it from rain, snow, liquids and mechanical damage. Ship lithium modules at 20–50 % state of charge.

10.3 Storage

- Store the UPS in the marked orientation, with the package at least 8 in (200 mm) above the floor and at least 20 in (500 mm) from walls, heat and cold sources, windows and air inlets.
- Storage temperature 14–113 °F (−10 to +45 °C), relative humidity 20–80 %. The warehouse must be free of flammable, explosive or corrosive materials and harmful gases, strong vibration, impact and magnetic fields.
- Under these conditions the UPS can generally be stored for 6 months; after 6 months, inspect it again.
- Lithium modules in storage: check their SOC at least every 3 months and charge them according to Table 8-3. Modules shipped at 20–50 % SOC need a charge every month while their SOC is below 40 %.

APPENDIX A

A Technical specifications

The data of the three models. Specifications are subject to change without notice.

TABLE A-1 Values that differ by model

Item	ETHERNO 10K	ETHERNO 20K	ETHERNO 30K
Rating	10 kVA / 10 kW	20 kVA / 20 kW	30 kVA / 30 kW
Maximum input current	37.0 A	75.9 A	100.0 A
Output and bypass current	30.3 A	60.6 A	90.9 A
Lithium modules per UPS	1–3	2–3	3
Noise at 77 °F (25 °C)	< 63 dB	< 68 dB	< 68 dB
Weight, frame only	216 lb (98 kg)	227 lb (103 kg)	240.2 lb (109 kg)
Weight with modules (factory configuration)	297.6 lb (135 kg), 1 module	390.2 lb (177 kg), 2 modules	485 lb (220 kg), 3 modules

TABLE A-2 Values common to all models

Item	ETHERNO 10K · 20K · 30K
Input	
Input wiring	3 phases + N + PE
Nominal voltage	208/120 V, 60 Hz
Voltage range (line-to-neutral)	90–155 V AC at 100 % load; 70–90 V AC with the output derated linearly
Frequency range	39.5–70.5 Hz
Bypass synchronization window	60 Hz (or 50 Hz) ±10 %, auto-sensing
Bypass voltage window	±10 / ±15 / ±20 % (default ±20 %)
Input power factor	≥ 0.99
Input current THD	Linear full load ≤ 3 %; non-linear full load ≤ 5 %
Output	
Output wiring	3 phases + N + PE
Voltage	L-L 190 / 200 / 208 / 220 V (default 208 V); L-N 110 / 115 / 120 / 127 V (default 120 V)
Frequency	Utility normal: tracks the bypass. Utility abnormal: 60 ±0.1 Hz (or 50 ±0.1 Hz, setting)
Waveform	Pure sine wave
Voltage distortion	Linear full load ≤ 1 %; non-linear full load ≤ 4 %
Power factor	1 (default); 0.9 available — see the note below
Transfer time, inverter ↔ bypass	Synchronized < 1 ms; not synchronized < 10 ms
Efficiency	Up to 94 % (online); up to 98 % (ECO)

Item	ETHERNO 10K · 20K · 30K
Overload, inverter	< 105 % continuous · 105–110 % 60 min · 110–130 % 10 min · 130–150 % 1 min · 150–200 % 200 ms · > 200 % immediate protection
Overload, bypass	< 130 % continuous · 130–155 % 1 min · > 155 % 200 ms
Battery	
Type	50 Ah lithium iron phosphate (LiFePO4) modules, hot-swappable (ETH-50-LI)
Module	18 × 3.2 V LiFePO4 cells, 57.6 V, 50 Ah · 2.88 kWh nominal · internal DC/DC converter
Battery voltage	240 V DC (DC/DC output of the modules)
Charge current	2–40 A, adjustable (default 20 A)
Recharge time	< 2 h
Module size and weight	8.8 × 26.2 × 6.0 in (223 × 665 × 152 mm), 81.6 lb (37 kg)
General	
DC (cold) start	Yes
Display	4.3-inch color touchscreen
Communication	RS-485 and dry contacts standard; SNMP-L card, dry-contact card and protocol-converter card (RS-485 + RS-232) optional
Alarms	Battery low, utility abnormal, UPS fault, output overload, etc.
Protection	Battery undervoltage, overload, short circuit, over-temperature, input overvoltage, communication fault, etc.
Operating temperature	32–104 °F (0–40 °C)
Storage temperature	14–113 °F (−10 to +45 °C)
Relative humidity	0–95 %, non-condensing
Altitude	Up to 6,560 ft (2,000 m)
Enclosure	IP20
Dimensions W × D × H	12.6 × 39.1 × 49.2 in (320 × 993 × 1,250 mm); base with anchoring brackets 14.9 in (378 mm) wide
Safety	UL 1778 listed (UL certificate E543003) · battery modules UL 1973 listed (file number pending), UL 9540A tested, UN 38.3 tested
Warranty	5 years, UPS and lithium modules

i NOTE Output power factor: the UPS is rated at power factor 1 (kVA = kW). A 0.9 setting exists, but it is not on the user menus of Table 5-5: ask AEC service.

APPENDIX B

B Runtime

Typical runtime in minutes at 77 °F (25 °C), with new, fully charged modules, by load as a percentage of the rated output power.

TABLE B-1 Runtime by configuration (minutes)

Load	10K × 1 module · 20K × 2 modules · 30K × 3 modules	10K × 2 modules	10K × 3 modules	20K × 3 modules
10 %	133	265	398	199
20 %	66	133	199	100
25 %	55	111	166	84
30 %	44	89	133	68
40 %	33	66	100	51
50 %	27	55	82	41
60 %	23	46	68	34
70 %	18	36	55	27
75 %	17.5	35	53	26.5
80 %	17	34	51	26
90 %	15	30	46	23
100 %	14	27	41	20

Published AEC runtime data for ETH10-1X50A-LI, ETH10-2X50A-LI, ETH10-3X50A-LI, ETH20-2X50A-LI, ETH20-3X50A-LI and ETH30-3X50A-LI. Actual runtime depends on load type, temperature and battery age.

C

APPENDIX C

Drawings

AEC engineering drawings of the ETHERNO 10–30 kVA, version 001: single-line diagram, appearance, installation, cooling and wiring. Dimensions in mm.

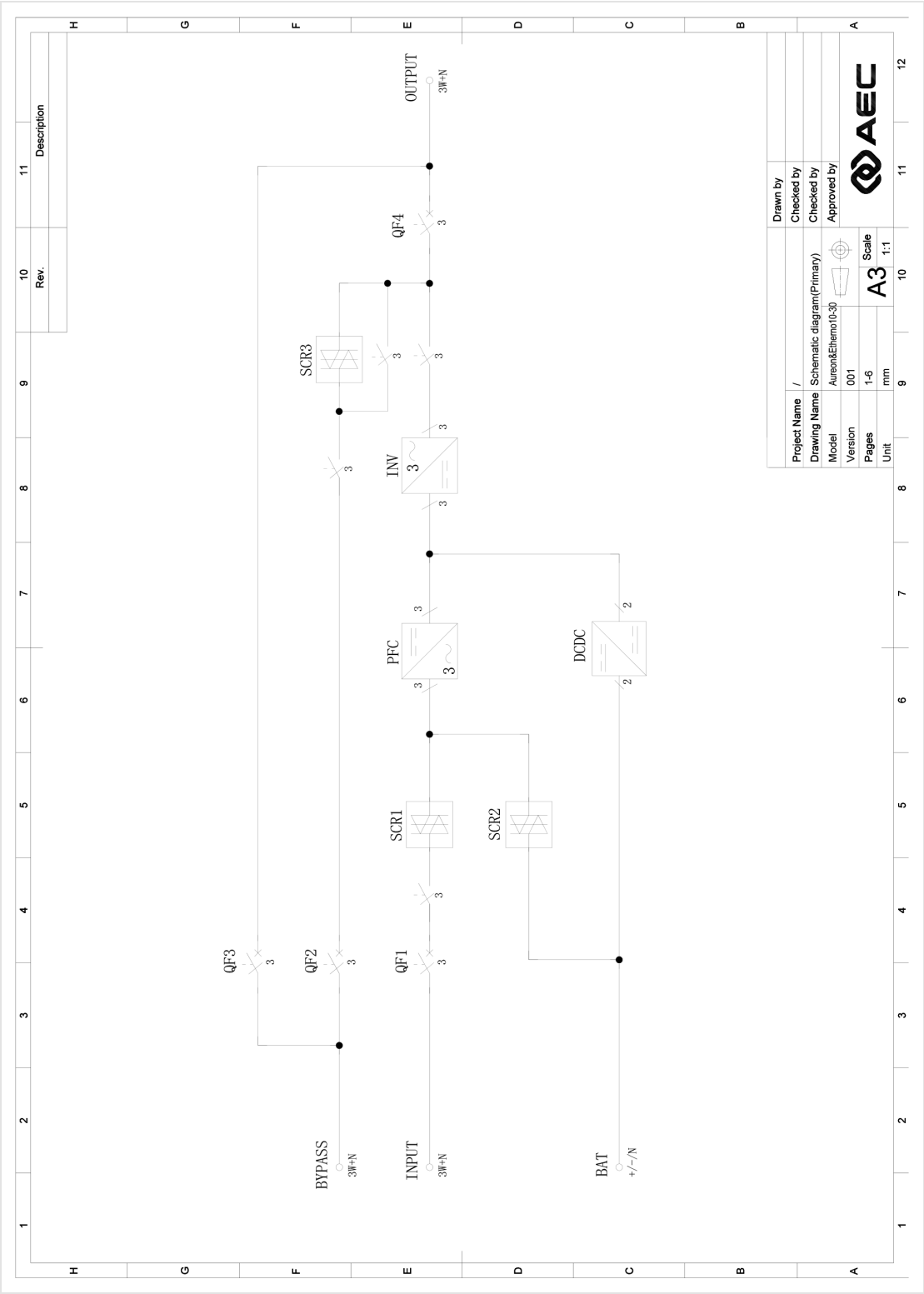

FIGURE C-1 Single-line diagram: utility input (QF1), bypass (QF2), maintenance bypass (QF3), output (QF4), rectifier/PFC, inverter, static switch and battery DC/DC

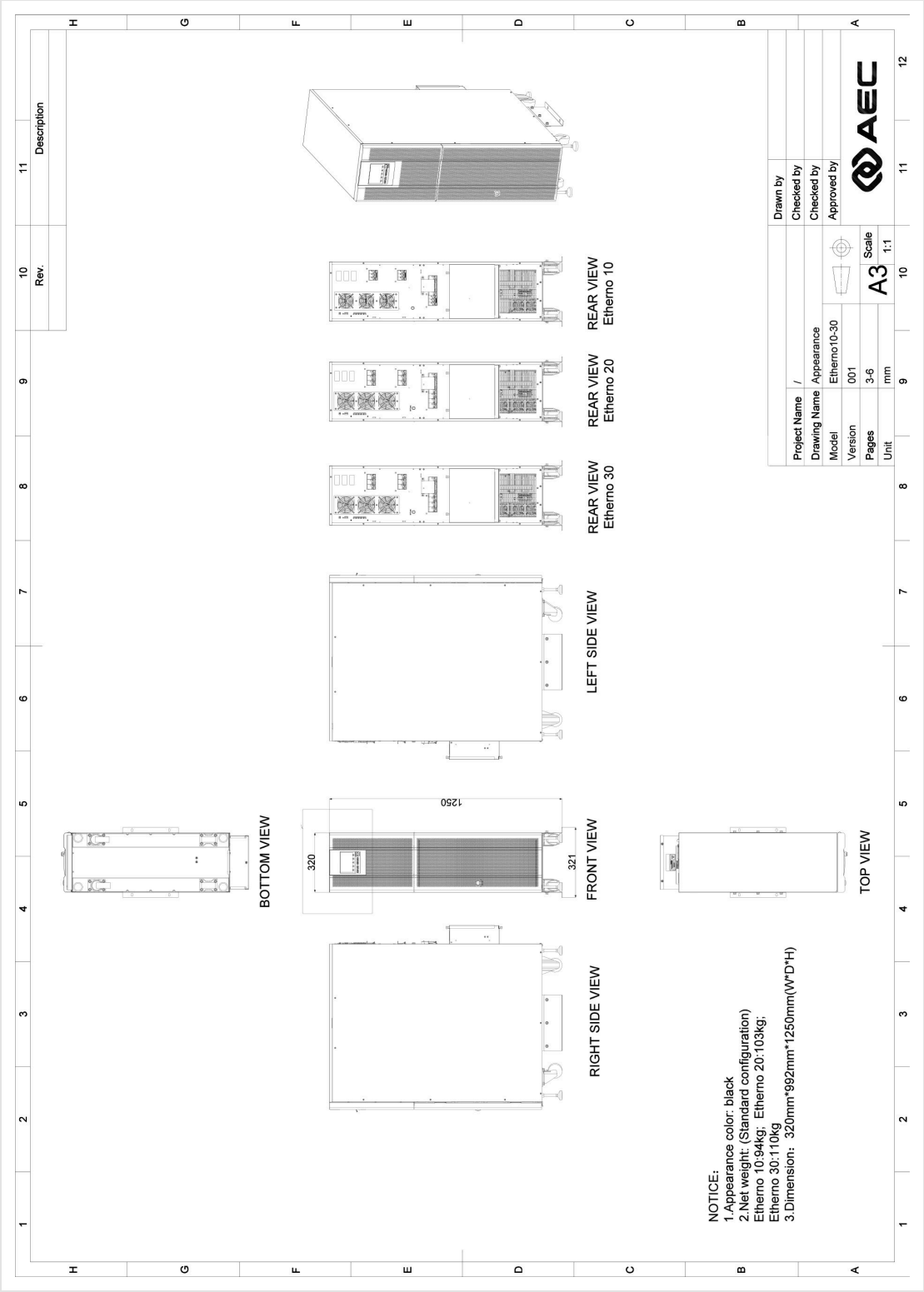

FIGURE C-2 Appearance: right side, front, left side, rear (30K, 20K, 10K), bottom and top views; cabinet 320 × 992 × 1,250 mm

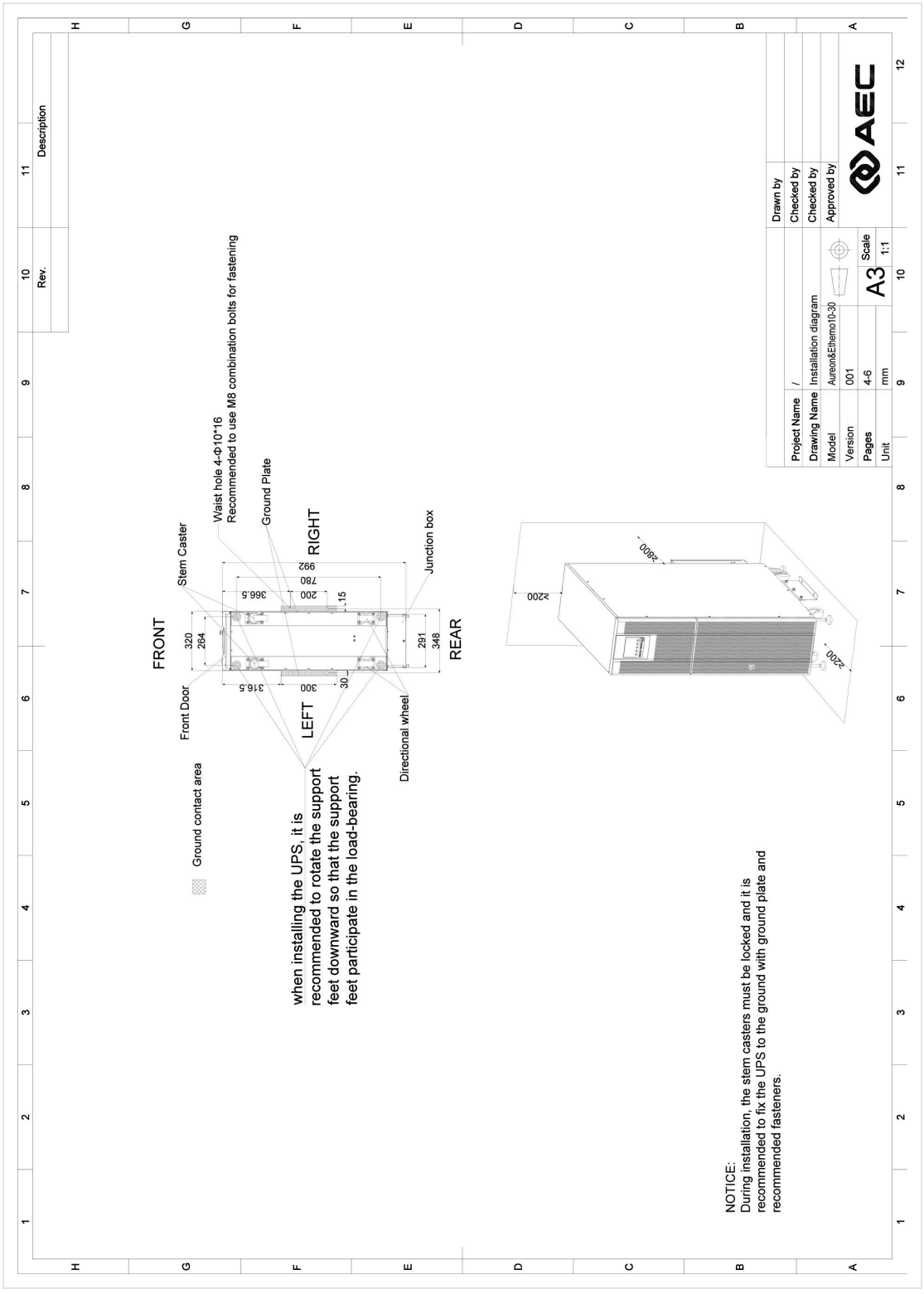

FIGURE C-3 Installation diagram

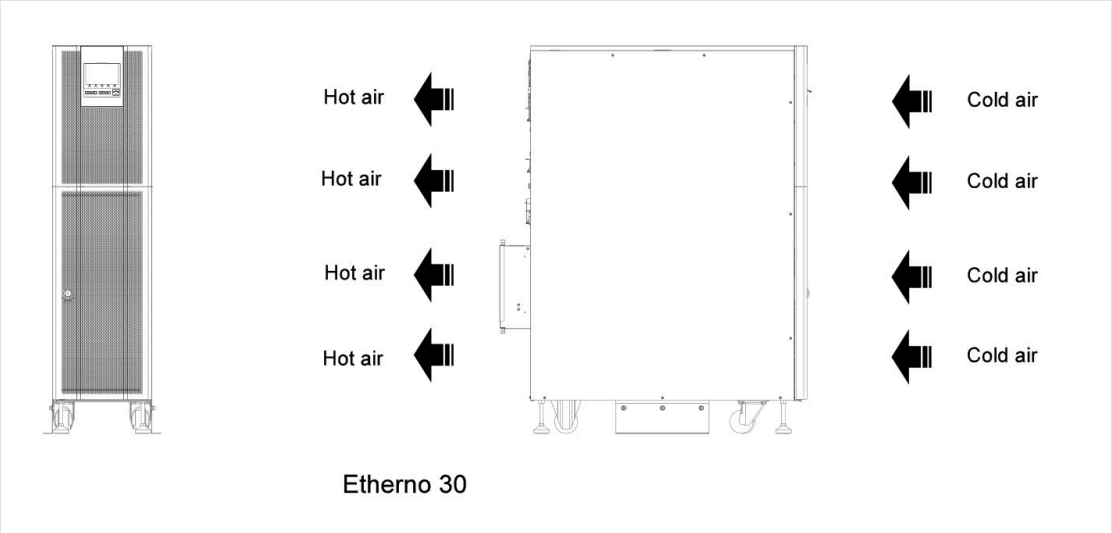

FIGURE C-4 Cooling: cold air in at the front, hot air out at the rear

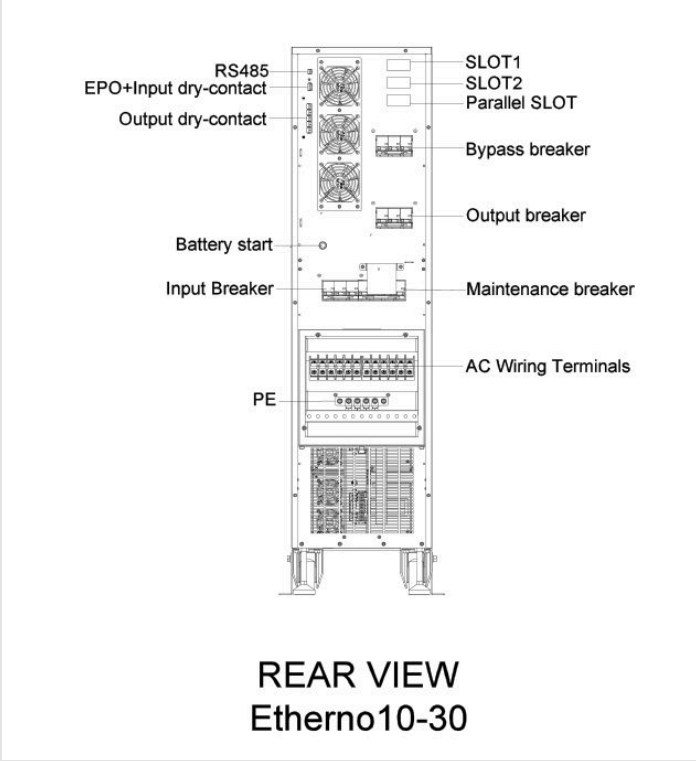

FIGURE C-5 Wiring drawing — rear view with the terminal names

TABLE C-1 Recommended wire specifications from the AEC wiring drawing

Model	Circuit	Rated current	Terminal hole	Bolt	Wire	Ring terminal
ETHERNO 10K	AC input A/B/C/N	37.0 A	Ø4.5 mm	M4 × 30	8 AWG	RNB8-6
	Bypass input A/B/C/N	30.3 A	Ø4.5 mm	M4 × 30	8 AWG	RNB8-6
	Output A/B/C/N	30.3 A	Ø4.5 mm	M4 × 30	8 AWG	RNB8-6
	PE	—	Ø6.5 mm	M6 × 16	8 AWG	RNB8-6
ETHERNO 20K	AC input A/B/C/N	75.9 A	Ø4.5 mm	M4 × 30	3 AWG	RNBS22-6
	Bypass input A/B/C/N	60.6 A	Ø4.5 mm	M4 × 30	3 AWG	RNBS22-6
	Output A/B/C/N	60.6 A	Ø4.5 mm	M4 × 30	3 AWG	RNBS22-6
	PE	—	Ø6.5 mm	M6 × 16	3 AWG	RNBS22-6
ETHERNO 30K	AC input A/B/C/N	100.0 A	Ø4.5 mm	M4 × 30	1 AWG	SC50-8
	Bypass input A/B/C/N	90.9 A	Ø4.5 mm	M4 × 30	1 AWG	SC50-8
	Output A/B/C/N	90.9 A	Ø4.5 mm	M4 × 30	1 AWG	SC50-8
	PE	—	Ø6.5 mm	M6 × 16	1 AWG	SC50-8

NOTICE

The drawing and the factory tables of Section 4.4 differ on the AC terminal bolts (M4 × 30 here, M6 there), on the bypass and output wire sizes and on the frame weights (drawing: 94 / 103 / 110 kg). For the conductors, Table 4-2 applies in the US; ask AEC to confirm the bolt size and torque.

D

APPENDIX D

Acronyms and abbreviations

The abbreviations used in this manual and on the touchscreen.

TABLE D-1 Acronyms and abbreviations

Term	Meaning
AC	Alternating current
AWG	American Wire Gauge
BB	Battery breaker
BMS / PBMU	Battery management system / pack battery management unit
DC	Direct current
ECO	Economy mode: the load on the static bypass
EPO	Emergency power off
ESD	Electrostatic discharge
HMI	Human–machine interface (the touchscreen)
IGBT	Insulated-gate bipolar transistor
LiFePO4	Lithium iron phosphate (battery chemistry)
MBB	Maintenance bypass breaker
NEC	National Electrical Code (NFPA 70)
PE	Protective earth (ground)
PFC	Power-factor correction
RS-232 / RS-485	Serial communication standards (TIA-232 / TIA-485)
SNMP	Simple Network Management Protocol
SOC / SOH	State of charge / state of health
THD	Total harmonic distortion
UPS	Uninterruptible power supply
USB	Universal Serial Bus

E

APPENDIX E

Frequently asked questions

Short answers to the questions AEC support hears most.

TABLE E-1 Frequently asked questions

Question	Answer
Should the UPS stay switched on?	Yes. Leave it on all the time: it protects the load and keeps the battery charged.
Is the output a pure sine wave?	Yes: the UPS is online double conversion, on utility and on battery.
Why lithium?	LiFePO4 lasts much longer than lead-acid (15-year design life), recharges faster, weighs less and stands heat better; the battery management system protects every cell.
Can I add a module later?	Yes, up to three per frame: install it in the next free bay (Section 4.7) and set the module quantity (Section 5.5.2).
What happens when the battery runs out?	The UPS switches its output off at the end of discharge, and restarts and recharges when the utility returns.
Can the UPS run from a generator?	Yes — see Section 3.3.
What is ECO mode?	The load runs on the bypass while the utility is good: higher efficiency, but no protection from disturbances. Use normal (online) mode for critical loads.
How do I monitor it on the network?	With the SNMP-L card — see Section 7.1.

APPENDIX F

Installation record

Fill this record in at installation and keep it with the UPS: it is the first thing AEC support asks for.

TABLE F-1 Installation record

Item	Value
Model and ordering code	
Serial number	
Installation date	
Installed / commissioned by	
Site and room	
Input, bypass and output breakers and conductor sizes	
Number of lithium modules · module quantity setting	
Output settings (voltage, frequency, mode)	
Parallel mode and UPS ID (parallel systems)	
SNMP-L card IP address	
Load at start-up (kW, %)	
Battery test result and date	

Service and support

AEC technical support is available 24 hours a day, 7 days a week. For help with installation, start-up, alarms, settings, spare parts, warranty claims and service visits, contact us by WhatsApp, phone or e-mail.

TECHNICAL SUPPORT · 24/7	**+1 786 553 2100**	WhatsApp and phone — always available
SERVICE E-MAIL	**service.us@aecups.com**	Technical questions, service requests, warranty claims
SALES	**sales@aecups.com**	
ADDRESS	**AEC UPS USA LLC**	4872 SW 72nd Ave, Miami, FL 33155
WEB	**aecups.com**	

When you contact us, have ready: the model and ordering code, the serial number (on the rating label and in Device info.), the alarm or event shown, the load and the number of lithium modules — a photo of the display and of the label speeds things up on WhatsApp.