ONLINE UPS · 120 V · RACK / TOWER

FERRUS RT

1–3 kVA

Online double-conversion UPS, single-phase 120 V, unity power factor, in a 2U chassis for 19-inch racks or upright on stands, with internal VRLA batteries and BAT...RT battery packs.



User Manual

Installation · Operation · Maintenance

FERRUS RT 1K | FERRUS RT 1.5K | FERRUS RT 2K | FERRUS RT 3K

COPYRIGHT AND NOTICES

Copyright © 2026 AEC UPS USA LLC. All rights reserved. No part of this document may be reproduced or transmitted in any form or by any means without the prior written consent of AEC UPS USA LLC.

Trademarks. AEC and FERRUS RT are trademarks of AEC UPS USA LLC. All other trademarks and trade names mentioned in this document are the property of their respective owners.

Notice. The products, services and features you purchase are defined by the contract between AEC and the customer; some of those described in this document may not be included in your purchase or use. Unless the contract says otherwise, all statements, information and recommendations in this document are provided “as is”, without warranties, guarantees or representations of any kind, express or implied. The information in this document may change without notice. Every effort has been made to ensure its accuracy, but nothing in it constitutes a warranty of any kind, express or implied. The illustrations are for reference: the actual product may differ slightly.

AEC UPS USA LLC
4872 SW 72nd Ave, Miami, FL 33155
Technical support, 24/7 · phone and WhatsApp: **+1 786 553 2100**
service.us@aecups.com · sales@aecups.com · aecups.com

AEC-UM-FRT-US · Rev. D · November 2026. Rev. D adds the FERRUS RT 1.5K throughout, restores the battery current and battery-pack rules of the previous manual, sizes the branch circuit to the NEC, adds the FCC statement and call-out pictures for every panel, display page and mounting step, and limits battery expansion to BAT…RT packs.

BEFORE YOU START

About this manual

Thank you for choosing an AEC FERRUS RT UPS. This manual describes the FERRUS RT 1–3 kVA online UPS: safety, the product and its panels, planning, rack and tower installation, the battery packs, operation, the display and its settings, communication, battery runtime, maintenance, troubleshooting and the specifications. Read it before you start, and keep it near the UPS. The tower FERRUS 1–3 kVA has its own user manual.

MODELS COVERED
FERRUS RT 1K, 1.5K, 2K and 3K, 120 V, 2U rack/tower, with internal VRLA batteries and optional BAT...RT battery packs. Ordering codes: Table 2-2.

WHO THIS MANUAL IS FOR
Installers, IT and facility staff who install and operate the UPS. The branch circuit is installed by a qualified electrician. Battery work is done by qualified personnel.

Safety messages

Safety messages in this manual follow ANSI Z535.6. The signal word tells how serious the hazard is:

DANGER	A hazardous situation which, if not avoided, **will** result in death or serious injury.
WARNING	A hazardous situation which, if not avoided, **could** result in death or serious injury.
CAUTION	A hazardous situation which, if not avoided, could result in minor or moderate injury.
NOTICE	Information about practices that could damage the equipment, lose data, reduce performance or give unexpected results — not related to injury.

Other conventions

i NOTE Additional information that stresses or completes the text.

✓ TIP A hint that helps you solve a problem or save time.

Keys are shown like [ON]; menus like **Settings › Battery**. Numbers in red circles on a picture are explained in the list under it. Cross-references in red are links in the PDF.

QUICK START

Up and running in six steps

The short version — each step points to the full instructions. Read the safety chapter first.

1. **Unpack and inspect** the UPS and the accessories. Section 4.1, page 23.
2. **Mount the UPS** in a 19-inch rack on the rails and rack ears, or upright on its two stands. Section 4.3, page 23, Section 4.4, page 25.
3. **Plug the UPS into a grounded receptacle** on a branch circuit sized to the NEC, then plug in the loads. Section 4.6, page 29.
4. **Long backup only:** connect the BAT…RT battery packs after the input, then set the battery capacity and charge current. Section 4.8, page 30, Section 5.12, page 37.
5. **Start:** no key is needed. The UPS starts on bypass and goes to normal mode by itself: REC and INV steady green. Section 5.3, page 33.
6. **Charge the battery for at least 12 hours** before you rely on the full runtime. Section 8.2, page 45.

0 ms	2U	4.2–80.8 min	3 + 2 years
online double conversion, kVA = kW	rack or tower, 19-inch	at full load, internal battery to 4 packs	warranty, UPS + VRLA batteries

CONTENTS

Contents

1 Safety 7
1.1 Battery safety 7
1.2 General safety 7
1.3 Installation environment and EMC 8
1.4 Standards 8

2 Product description 10
2.1 Introduction 10
2.2 Models and ordering codes 10
2.3 What is in the box 10
2.4 How FERRUS RT is built 11
2.5 Front 12
2.6 Operation panel 13
2.7 Rear panels 15
2.8 The LCD 17
2.9 How the UPS works 18
2.10 Operating modes 19
2.11 Protections 20

3 Planning the installation 21
3.1 Sizing the load 21
3.2 Estimating the runtime 21
3.3 Running on a generator 21

4 Installation 23
4.1 Unpacking and inspection 23
4.2 Site and environment 23
4.3 Mounting in a rack 23
4.4 Mounting as a tower 25
4.5 Where the connections are 26
4.6 Connecting the input 29
4.7 Connecting the loads 30
4.8 Adding battery packs 30
4.9 Communication connections 32

5 Operation 33
5.1 Before the first start 33
5.2 Turning the UPS on and off at a glance 33
5.3 Starting on utility power 33
5.4 Starting on battery (cold start) 34
5.5 Transferring to bypass and back 34
5.6 ECO mode 34
5.7 Silencing the alarm 34
5.8 Shutting down 35
5.9 Everyday use 35
5.10 What the panel tells you 36
5.11 Reading the LCD pages 36
5.12 Settings 37

6 Communication and monitoring 40

6.1 SNMP-M network card 40
6.2 UPS View software 41
6.3 Dry-contact card 42
6.4 Emergency power off (EPO) 42

7 Battery and runtime 44

8 Maintenance 45
8.1 Maintenance schedule 45
8.2 Battery care and battery test 45
8.3 Component life 45
8.4 Battery life and temperature 46
8.5 Replacing the internal battery 46
8.6 Battery handling and disposal 47
8.7 Storage and transport 47

9 Troubleshooting 48
9.1 Checking the UPS 48
9.2 Symptoms and remedies 48
9.3 Fault and warning codes 49

10 Specifications 52

A Ordering codes and accessories 54

B Internal battery assembly 55
B.1 FERRUS RT 1K battery pack 55
B.2 FERRUS RT 1.5K, 2K and 3K battery packs 56

C Warranty 58

D Acronyms and abbreviations 59

E Drawings 60

F Quick reference 61

G Frequently asked questions 62

H Installation record 63

01

CHAPTER 1

Safety

Read this chapter before you install, operate or service the UPS. Safety messages also appear in the chapters where each task is described.

⚠ WARNING · IMPORTANT SAFETY INSTRUCTIONS — SAVE THESE INSTRUCTIONS

This manual contains important instructions for the FERRUS RT 1–3 kVA UPS and its batteries. Follow them during installation, operation and maintenance.

1.1 Battery safety

⚠ DANGER

The battery can cause electric shock and a high short-circuit current. Before you replace or connect batteries:

- Wear rubber gloves and boots.
- Remove rings, watches and other metal objects.
- Use tools with insulated handles.
- Do not lay tools or other metal objects on the batteries.
- If a battery is damaged or shows signs of leakage, contact AEC service immediately.
- Do not dispose of batteries in fire: they can explode.
- Handle, transport and recycle batteries according to local regulations.

⚠ WARNING

- The battery circuit is not isolated from the input. Hazardous voltage can be present between the battery terminals and ground. Check for voltage before you touch them.
- Even with the input unplugged, the internal circuits stay connected to the batteries. Before maintenance, switch off the breaker of every battery pack.
- Use only BAT...RT packs of the same DC voltage and type as the UPS (Table 4-4).

1.2 General safety

⚠ WARNING

Improper use can cause electric shock or fire.

- Switch the UPS off and unplug it before you clean it.
- Clean the UPS with a dry cloth. Do not use liquid or aerosol cleaners.
- Never block the ventilation openings or put objects into them.
- Do not place the power cord where it can be damaged.

⚠ WARNING

- The UPS contains no user-serviceable parts except the internal battery packs. Never open the UPS: risk of electric shock or burns.
- Battery service must be done or supervised by personnel who know batteries and the precautions needed. Keep unauthorized persons away from the batteries.

⚠ CAUTION

Do not connect equipment that could overload the UPS or draw DC current from it — for example electric drills, vacuum cleaners, laser printers, hair dryers, space heaters or any appliance with half-wave rectification.

1.3 Installation environment and EMC

- Install the UPS indoors only, at an ambient temperature of 32–104 °F (0–40 °C).
- Install it in a clean place, free from moisture, flammable liquids, gases and corrosive substances.
- Plug the UPS only into a grounded receptacle on a branch circuit installed to the National Electrical Code (NFPA 70) and local codes (Section 4.6).

NOTICE

This product is intended for sale to informed professional partners. Installation restrictions or additional measures may be needed to prevent radio interference.

1.4 Standards

The UPS meets the UL 1778 standard. It is designed according to the following standards.

TABLE 1-1 Design standards

Standard	Subject
UL 1778	Uninterruptible power systems — safety (North America)
IEC 62040-1	UPS — general and safety requirements
IEC 62040-2	UPS — electromagnetic compatibility (EMC)
IEC 62040-3	UPS — performance and test requirements
IEC 61000-3-2 · IEC 61000-3-12	Harmonic currents (up to 16 A · above 16 A per phase)
IEC 61000-3-3 · IEC 61000-3-11	Voltage fluctuations and flicker
IEC 61000-4-2	Immunity to electrostatic discharge
IEC 61000-4-3	Immunity to radiated electromagnetic fields
IEC 61000-4-4	Immunity to electrical fast transients / bursts
IEC 61000-4-5	Immunity to surges
IEC 61000-4-6	Immunity to conducted disturbances
IEC 61000-4-8	Immunity to power-frequency magnetic fields
IEC 63000	Restriction of hazardous substances (RoHS) — technical documentation

Standard	Subject
NFPA 70 (NEC)	Installation: branch circuits, receptacles, conductors (Articles 210, 240, 310)

1.4.1 FCC statement

This equipment has been tested and found to comply with the limits for a Class A digital device, pursuant to Part 15 of the FCC Rules. These limits are designed to provide reasonable protection against harmful interference when the equipment is operated in a commercial environment. This equipment generates, uses and can radiate radio-frequency energy and, if not installed and used in accordance with this manual, may cause harmful interference to radio communications. Operation of this equipment in a residential area is likely to cause harmful interference, in which case the user will be required to correct the interference at his own expense.

CHAPTER 2

02 Product description

The FERRUS RT models and codes, the front, the operation panel, the rear panel of each model, the display, how the UPS works, its operating modes and its protections.

2.1 Introduction

FERRUS RT is an online double-conversion UPS for 120 V single-phase loads from 1 to 3 kVA. Its output power factor is 1 (kVA = kW). Internal VRLA batteries are standard. The 2U chassis mounts in a 19-inch rack or stands upright on two stands. BAT...RT battery packs of the same DC voltage extend the runtime.

The tower FERRUS 1–3 kVA is a different product with its own user manual.

TABLE 2-1 FERRUS RT at a glance

Feature	What it gives you
Online	Double conversion: the inverter always feeds the load. Transfer to battery takes 0 ms.
kVA = kW	Output power factor 1: every VA is a usable watt.
55–150 V input	Wide input window: brownouts stay on the utility and the battery is saved — full load down to 90 V, 70 % load down to 70 V, 40 % load down to the 55 V lower limit.
Online or ECO	System mode S (online) or E (ECO), set from the panel.
1 to 4 battery packs	BAT...RT packs of the UPS's DC voltage: up to 80.8 min at full load.
1–8 A charger	Charge current set to the battery installed, 9–200 Ah.

2.2 Models and ordering codes

TABLE 2-2 FERRUS RT models and ordering codes

Model	Rating	Code	Internal battery	Output receptacles
FERRUS RT 1K	1,000 VA / 1,000 W	FER1000RT-2X9	2 × 12 V 9 Ah · 24 V DC	8 × NEMA 5-15R
FERRUS RT 1.5K	1,500 VA / 1,500 W	FER1500RT-4X9	4 × 12 V 9 Ah · 48 V DC	8 × NEMA 5-20R
FERRUS RT 2K	2,000 VA / 2,000 W	FER2000RT-4X9	4 × 12 V 9 Ah · 48 V DC	8 × NEMA 5-20R
FERRUS RT 3K	3,000 VA / 3,000 W	FER3000RT-6X9	6 × 12 V 9 Ah · 72 V DC	6 × NEMA 5-20R + 1 × NEMA L5-30R

How to read the code. In FER3000RT-6X9+BAT1272RTx2, FER is the FERRUS series, 3000 the rating in VA, RT the rack/tower chassis, 6X9 the internal battery (6 × 12 V 9 Ah), BAT1272RT the battery pack of the same DC voltage and x2 the number of packs (1 to 4; no suffix means one pack). The complete list is in Appendix A.

2.3 What is in the box

Inspect the contents on delivery. Report damage to the carrier and missing parts to AEC.

- 1 × FERRUS RT UPS (2U)

- 1 × user manual
- 1 × input cord (1K, for the IEC C14 inlet); the 1.5K, 2K and 3K have an attached cord
- 1 × battery cable (long-backup systems)
- 2 × rack ears with handles and 2 × tower stands
- 1 × RLKT telescopic rail kit (2- or 4-post 19-inch rack, max. 100 lb)

2.4 How FERRUS RT is built

FERRUS RT is one 2U steel chassis (Figure 2-1): the operation panel and the removable front grille at the front, a rack ear with handle on each side, the internal VRLA batteries and the power electronics under the top cover, and every connection on the rear panel (Section 2.7). Figure 2-2 shows the inside with the top cover lifted off. These pictures are renders of the AEC 3D model of the FERRUS RT 2K; the photos and drawings in this manual show the real unit.

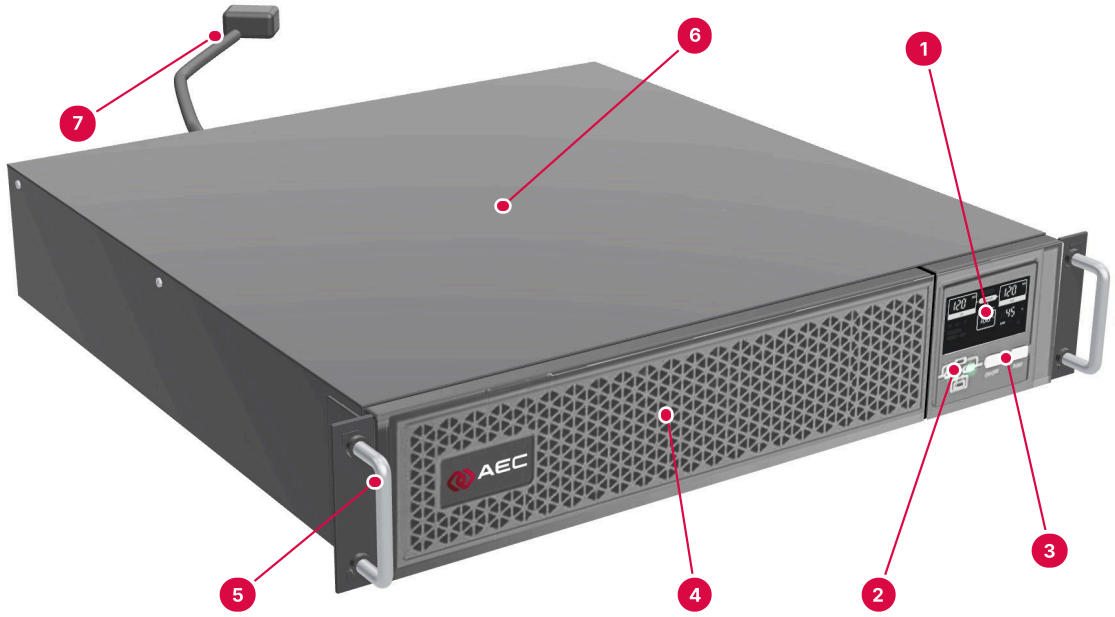

1	LCD (Section 2.8)	5	Rack ear with handle (one each side)
2	Status LEDs (Table 2-3)	6	Top cover
3	Keys (Table 2-4)	7	Input cord (attached on the 1.5K, 2K and 3K)
4	Front grille: cooling air in		

FIGURE 2-1 FERRUS RT from the front left — render of the FERRUS RT 2K

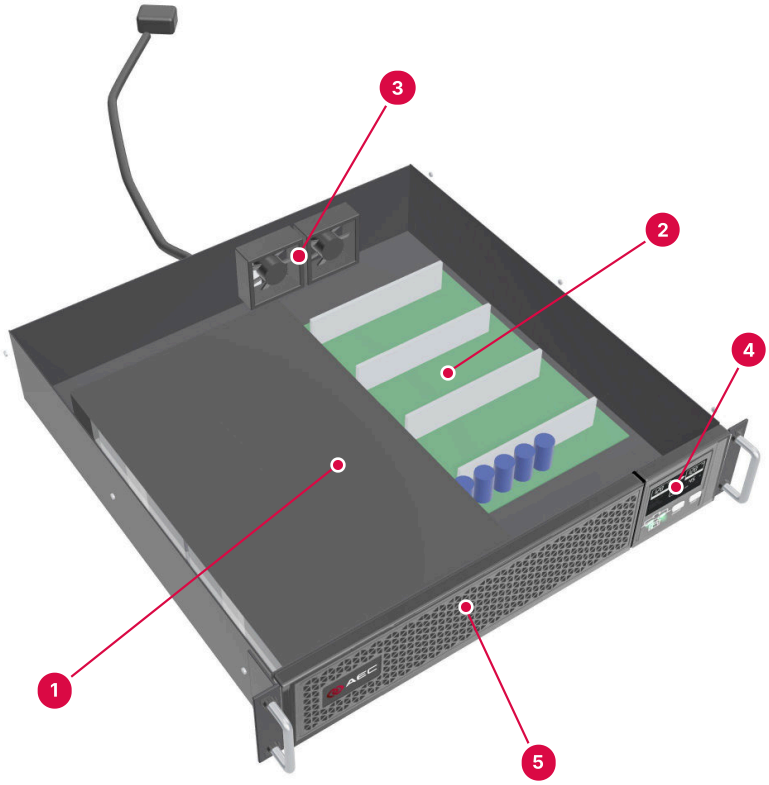

1	Internal battery bay (VRLA blocks, Appendix B)	3	Cooling fans, at the rear
2	Power stage: rectifier, inverter, charger, bypass	4	Operation panel
		5	Front grille

FIGURE 2-2 Illustration — internal layout simplified: FERRUS RT 2K with the top cover off

> ⚠ ***WARNING***
>
> The top cover is shown off for illustration only. Only qualified personnel may open the UPS, for example to replace the internal battery (Section 8.5).

2.5 Front

The same chassis works lying flat in a rack or standing upright on its two stands. Figure 2-3 shows both positions.



1. Operation panel: LCD, status LEDs and keys (Figure 2-4)
2. Front grille: cooling air in
3. Rack ear and handle (one each side)
4. Rack ear and handle, right
5. Operation panel in the tower position: it reads upright
6. Front grille, tower position
7. Tower stands (2), front and rear

FIGURE 2-3 FERRUS RT front — in a rack (left) and as a tower (right)

2.6 Operation panel

The operation panel has a black segment LCD, four status LEDs on a power-flow mimic and two keys, ON/OFF and FUNC. It is the same in the rack and the tower position.

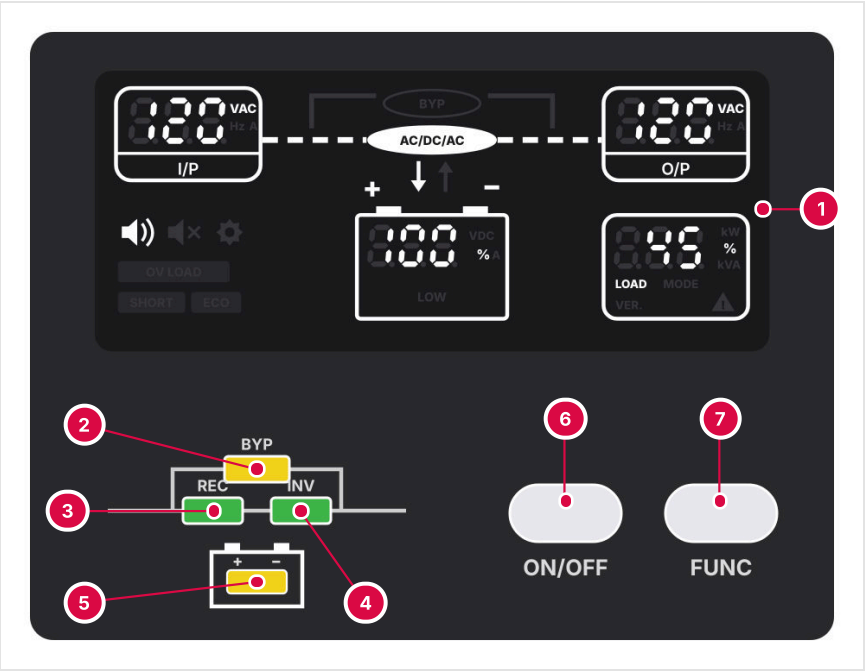

1. LCD: readings, power flow, alarms and settings (Section 2.8)
2. BYP LED, yellow: load on bypass
3. REC LED, green: rectifier
4. INV LED, green: inverter
5. BAT LED, yellow: battery
6. ON/OFF key
7. FUNC key

FIGURE 2-4 Operation panel

TABLE 2-3 Status LEDs

LED	Steady	Flashing	Off
REC	Green: rectifier normal	Green: rectifier starting	Rectifier not working
INV	Green: inverter normal	Green: inverter starting, or tracking the bypass (ECO)	Inverter not working
BYP	Yellow: load on bypass	Yellow: bypass alarm	Normal mode, bypass good
BAT	Yellow: battery discharging	Yellow: no battery, or battery alarm	Battery connected, not discharging

TABLE 2-4 Keys

Key	Function
ON/OFF	Press: starts the inverter when the rectifier is ready. Hold 2.5 s: moves the load to bypass; on battery, shuts the UPS down. Without utility power: press once to light the LCD, then hold 5 s to start from the battery (cold start). In the settings: confirms the value and goes to the next page.
FUNC	Press: next LCD page. Hold 1.5 s on page 1: mutes or unmutes the buzzer. Hold 1.5 s on page 4: clears a fault. In the settings: changes the value shown.
FUNC + ON/OFF	Hold both 2.5 s: opens the settings, or leaves them from any page. New settings apply after a restart.

2.7 Rear panels

Each rating has its own rear panel. The numbers are the same on every model and are explained in Table 2-5.

TABLE 2-5 Rear panel parts

No.	Part	Description
1	Input	IEC C14 inlet with the cord supplied (1K), or attached cord (1.5K and 2K NEMA 5-20P, 3K NEMA L5-30P).
2	Input surge protector	Resettable protector of the input. Press it to reset it after it trips.
3	Output receptacles	NEMA receptacles in two groups (Table 2-2).
4	Intelligent slot	For the optional SNMP-M network card or DRYCNT dry-contact card (Chapter 6).
5	USB	Optional, for monitoring software.
6	RS-232	DB9 port for monitoring software (Section 6.2).
7	External battery connector	For the battery cable of the BAT...RT packs (Section 4.8).
8	EPO	Two-pin terminal, normally closed: opening it turns the output off (Section 6.4).
9	NEMA L5-30R	30 A twist-lock receptacle, 3K only.
10	Output surge protectors	Resettable, one per receptacle group, 3K.
11	Rack ears	Fixing to the rack posts.
12	Fan outlet	Cooling air out at the rear. Keep it clear.

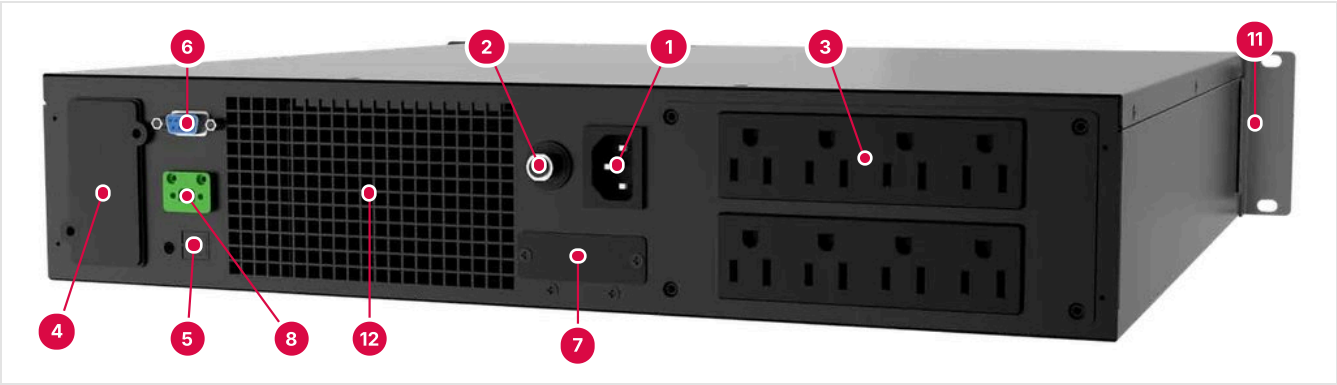

1	Input: IEC C14 inlet	6	RS-232 (DB9)
2	Input surge protector, resettable	7	External battery connector, under its cover
3	Output receptacles, group 1 (lower) and group 2 (upper)	8	EPO terminal (normally closed)
4	Intelligent slot, cover fitted	11	Rack ear
5	USB (optional)	12	Fan outlet: keep clear

FIGURE 2-5 Rear panel — FERRUS RT 1K (IEC C14 inlet, 8 × NEMA 5-15R, battery 24 V DC)

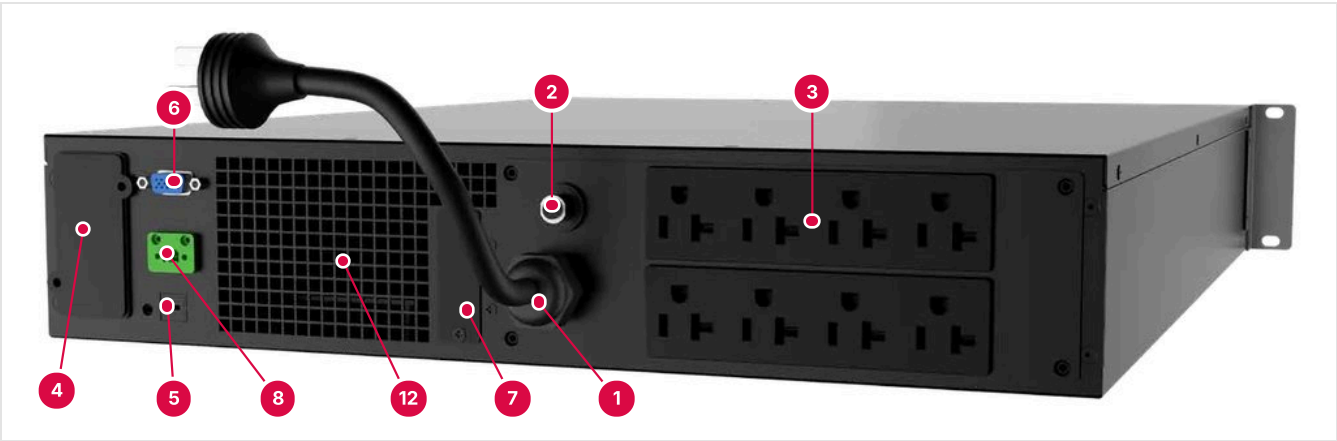

1	Input: attached cord, NEMA 5-20P plug	6	RS-232 (DB9)
2	Input surge protector, resettable	7	External battery connector, under its cover (behind the cord)
3	Output receptacles, group 1 (lower) and group 2 (upper)	8	EPO terminal (normally closed)
4	Intelligent slot, cover fitted	12	Fan outlet: keep clear
5	USB (optional)		

FIGURE 2-6 Rear panel — FERRUS RT 1.5K (NEMA 5-20P cord, 8 × NEMA 5-20R, battery 48 V DC; same panel as the 2K)

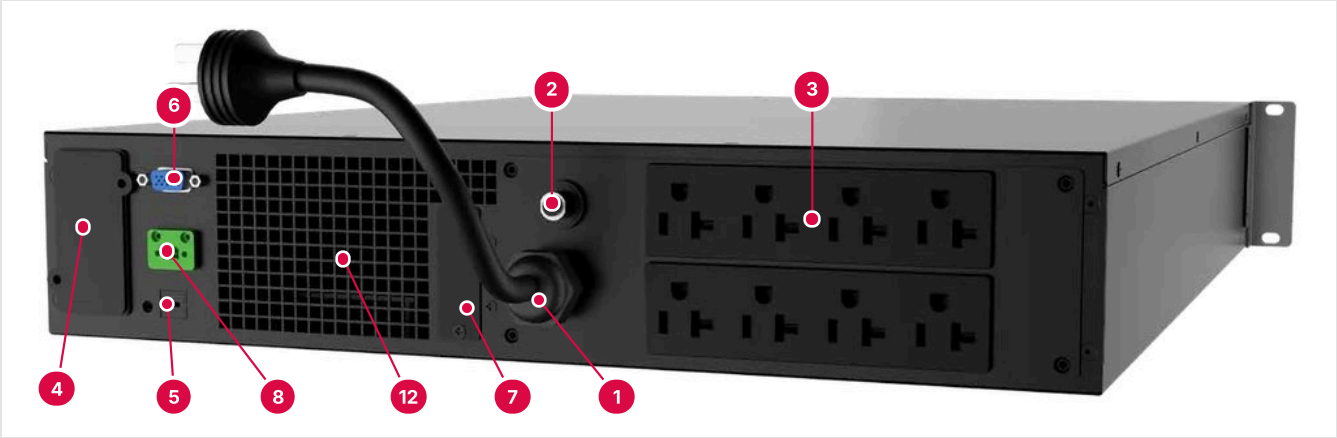

1	Input: attached cord, NEMA 5-20P plug	6	RS-232 (DB9)
2	Input surge protector, resettable	7	External battery connector, under its cover (behind the cord)
3	Output receptacles, group 1 (lower) and group 2 (upper)	8	EPO terminal (normally closed)
4	Intelligent slot, cover fitted	12	Fan outlet: keep clear
5	USB (optional)		

FIGURE 2-7 Rear panel — FERRUS RT 2K (NEMA 5-20P cord, 8 × NEMA 5-20R, battery 48 V DC)

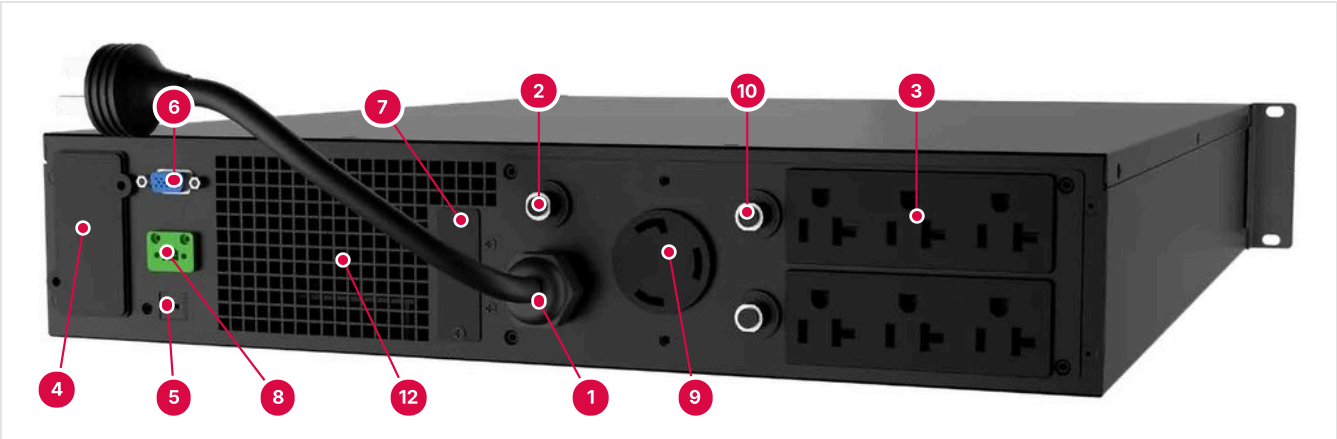

1	Input: attached cord, NEMA L5-30P plug	6	RS-232 (DB9)
2	Input surge protector, resettable	7	External battery connector, under its cover
3	Output receptacles NEMA 5-20R, group 1 (lower) and group 2 (upper)	8	EPO terminal (normally closed)
4	Intelligent slot, cover fitted	9	NEMA L5-30R receptacle, 30 A twist-lock (group 3)
5	USB (optional)	10	Output surge protectors, resettable (one per receptacle group)
		12	Fan outlet: keep clear

FIGURE 2-8 Rear panel — FERRUS RT 3K (attached cord with NEMA L5-30P plug, 6 × NEMA 5-20R + 1 × NEMA L5-30R, battery 72 V DC)

On the 3K, use the NEMA L5-30R receptacle for a load that draws more than 20 A.

2.8 The LCD

The LCD shows the readings, the power flow, the battery, the load and the alarms. Figure 2-9 shows every segment and symbol lit; in use, only the ones that apply light up.

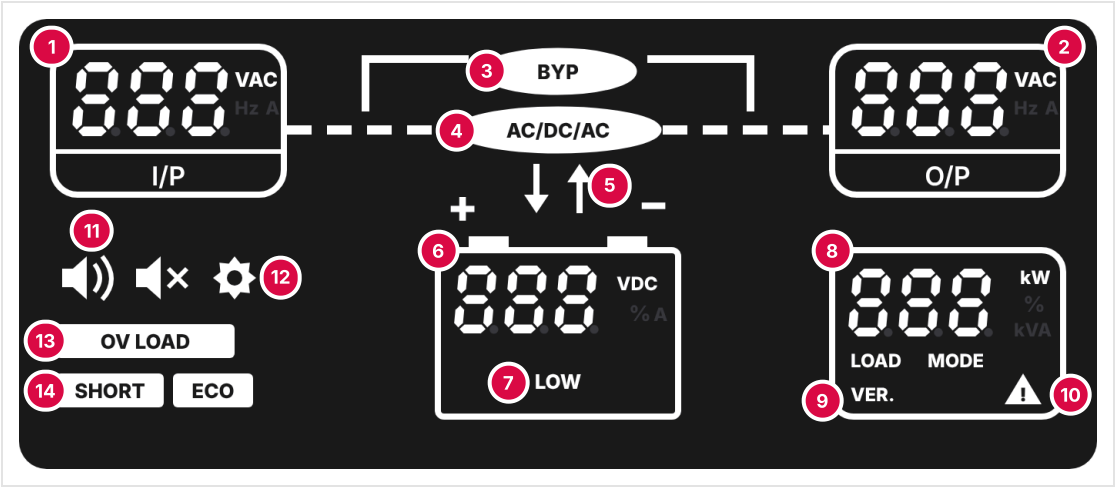

1. Input: voltage (V AC), frequency (Hz) or current (A), page by page
2. Output: the same readings for the output
3. BYP: lit when the load is on bypass
4. AC/DC/AC: lit when the inverter feeds the load
5. Battery arrows: down = charging, up = discharging
6. Battery: voltage, current, capacity (%), or the battery Ah in the settings
7. LOW: battery nearly exhausted
8. Load in kW, % or kVA; model code; firmware version
9. LOAD · MODE · VER.: what the number shows
10. Warning triangle: the number is an alarm code (Section 9.3)
11. Buzzer on · buzzer muted
12. Gear: settings open
13. OV LOAD: overload
14. SHORT: output short circuit · ECO: ECO mode

FIGURE 2-9 LCD map — all segments lit

The four LCD pages are described in Section 5.11, the settings in Section 5.12.

2.9 How the UPS works

FERRUS RT is an online double-conversion UPS. The PFC rectifier turns the utility AC into a regulated DC bus while drawing a near-sinusoidal current (input power factor above 0.99). The inverter rebuilds a precise, regulated sine wave from the DC bus, so the load never sees the utility directly. A DC-to-DC converter charges the battery and, when the utility fails, boosts the battery voltage onto the DC bus with no interruption. If the inverter fails, or an overload lasts longer than allowed, the static bypass connects the load to the utility.

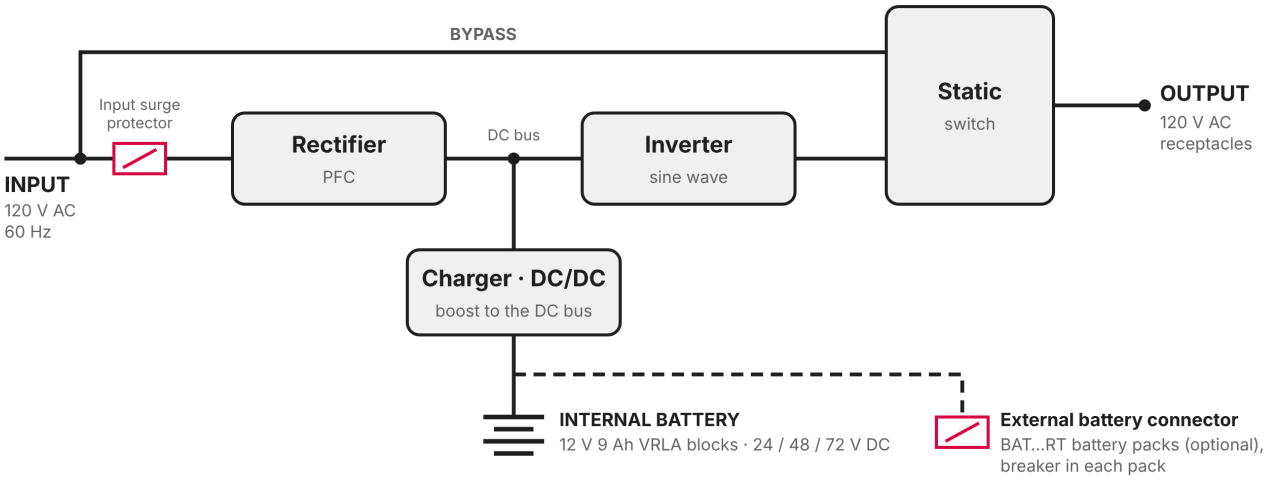

FIGURE 2-10 Single-line diagram

- **Rectifier / power-factor correction (PFC).** Converts the utility AC into regulated DC for the inverter while drawing a near-ideal input current: the utility power is used efficiently and less distortion goes back to the building wiring.
- **Inverter.** Turns the DC power into a precise, regulated sine-wave output. On utility and on battery, the inverter is online and generates the output continuously.
- **DC-to-DC converter.** Raises the battery voltage to the operating voltage of the inverter. Its boost circuit also works as PFC, and it converts DC bus energy to charge the battery.
- **Battery.** Valve-regulated, sealed lead-acid (VRLA) blocks inside the UPS; optional BAT...RT packs on the external battery connector.
- **Bypass.** Connects the load directly to the utility if the inverter fails or an overload times out. The bypass does **not** protect the load from utility disturbances.

2.10 Operating modes

TABLE 2-6 Operating modes and what the panel shows

Mode	When	LEDs	LCD
Normal (online)	Utility present. The inverter feeds the load and the battery is charged.	REC and INV green	AC/DC/AC lit; battery arrow down (charging)
Battery	Utility out of range or failed. The battery feeds the inverter with no break (0 ms).	INV green, BAT yellow; buzzer beeps	Battery arrow up (discharging); remaining capacity %
Bypass	UPS stopped with utility present, inverter fault, or overload time-out.	BYP yellow	BYP lit
ECO	System mode E: the load runs on the bypass while the utility is good; the inverter takes over when it is not.	BYP yellow, INV flashing green	BYP and ECO lit
Cold start	No utility: the UPS is started from its battery with ON/OFF.	INV green, BAT yellow	As battery mode

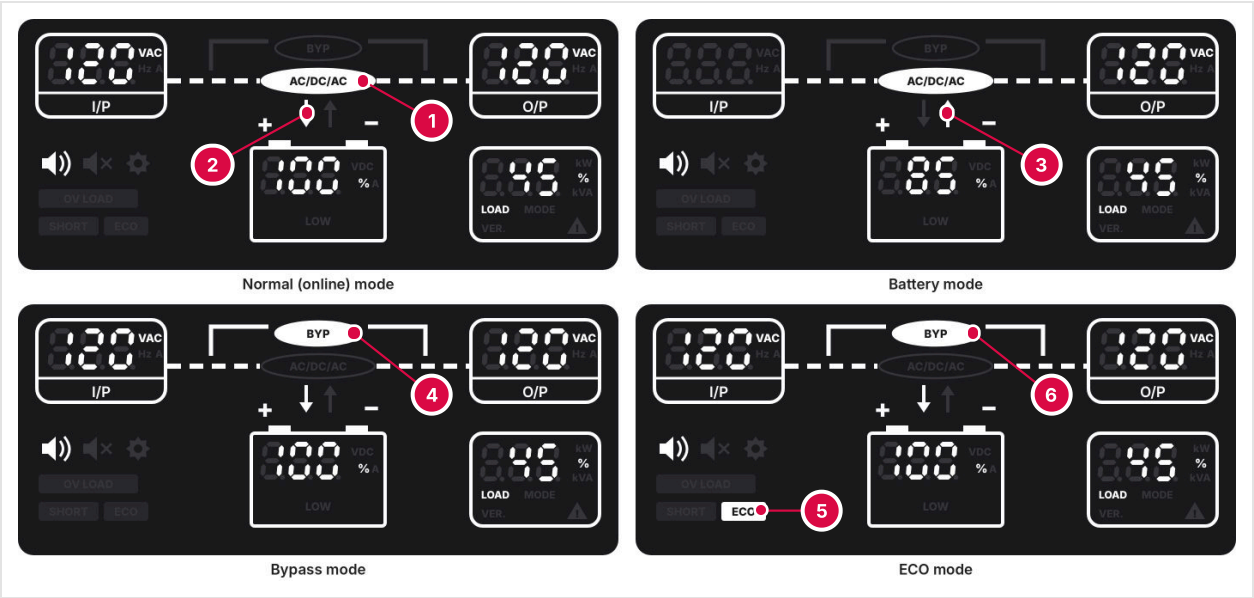

1. AC/DC/AC lit: the inverter feeds the load
2. Battery arrow down: charging
3. Battery arrow up: discharging; input blank, utility lost
4. BYP lit: the load is on the bypass
5. ECO lit: system mode E
6. BYP lit in ECO mode: the load runs on the bypass

FIGURE 2-11 The LCD in each operating mode (example readings)

NOTICE

On bypass and in ECO mode, the load is not protected from utility disturbances.

2.11 Protections

- Input surge protector, resettable (rear panel, item 2); on the 3K, output surge protectors per receptacle group (item 10).
- Overload: transfer to bypass, then output off if the overload continues on bypass (Table 10-3).
- Output short circuit.
- Rectifier and inverter over-temperature; fan failure.
- Battery low warning and end-of-discharge shutdown.
- Line and neutral reversed; input neutral lost.
- EPO input (normally closed loop).

CHAPTER 3

03 Planning the installation

Sizing the load, estimating the runtime and running on a generator — before you install.

3.1 Sizing the load

The output power factor is 1: the UPS delivers its full rating in watts — 1,000, 1,500, 2,000 or 3,000 W. Size the UPS on the watts the loads draw.

1. List every device that will run on the UPS.
2. Read its power in watts on the label or in the data sheet. If only volts and amps are given, multiply them (V × A). That gives VA, which is equal to or higher than the watts, so the estimate is on the safe side.
3. Add the watts. Keep the total at or below 80 % of the UPS rating. The margin covers start-up currents, future equipment and battery aging.
4. Check that no receptacle group is overloaded (Table 4-3).

TABLE 3-1 Worked example — a network rack on a FERRUS RT 3K

Load	Watts	From
Two 1U servers	2 × 350 W	power-supply label or vendor data sheet
Core switch	150 W	label
Firewall	60 W	label
PoE switch	240 W	label (PoE budget included)
Total	**1,150 W**	**38 % of 3,000 W**

Runtime. 38 % lies between the 30 % and 40 % columns of Table 7-2: about 15 minutes with the internal batteries (straight-line estimate). Two BAT1272RT packs give 23.7 minutes even at full load (Table 7-1).

✓ TIP Measure rather than guess: once the UPS runs, LCD page 1 shows the real load in %, kW or kVA. Check it again after you add equipment.

3.2 Estimating the runtime

1. Work out the load as a percentage of the rating.
2. Find your battery set-up in Chapter 7 and the two load columns on either side of your load. Estimate between them.
3. Allow a margin: the runtime is shorter with batteries that are old, cold, hot or not fully charged.
4. If the runtime is too short, add BAT...RT battery packs (up to four), or reduce the load on the UPS. Halving the load roughly doubles the runtime, or more.

3.3 Running on a generator

The UPS accepts an input of 55–150 V (full load from 90 V) and 60 Hz ±5 Hz, so it rides through the voltage and frequency swings of a standby generator. Its PFC input (power factor above 0.99) loads the generator cleanly.

- As a general rule, choose a generator rated at least 1.5 times the UPS input power, so that it also covers the battery recharge.
- Let the generator reach stable voltage and frequency before the transfer switch connects it to the UPS. The UPS stays on battery until the input is within range.
- If the UPS keeps returning to battery while on the generator, the generator is too small or unstable: check its voltage and frequency.

CHAPTER 4

04 Installation

Unpacking, the site, rack or tower mounting, the input branch circuit, the loads, the battery packs and the communication cables.

4.1 Unpacking and inspection

1. Open the package and check its contents (Section 2.3).
2. Inspect the UPS for transport damage. If anything is damaged or missing, do not switch the UPS on: notify the carrier and AEC immediately.
3. If the UPS was unpacked in a cold place, wait until it is completely dry inside and out before you install it. Condensation can cause electric shock.

⚠ CAUTION

The UPS weighs 41.8–61.7 lb (19–28 kg) and a battery pack up to 94.2 lb (42.7 kg). Lift them with two people.

4.2 Site and environment

TABLE 4-1 Operating environment

Item	Requirement
Location	Indoors, clean, dry; away from water, flammable liquids, gases and corrosive substances
Temperature	32–104 °F (0–40 °C); battery life is best at 68–77 °F (20–25 °C)
Humidity	Below 95 %, non-condensing
Altitude	Full power up to 3,300 ft (1,000 m); derate above (Table 10-4)
Ventilation	Air flows in at the front and out at the rear: keep both clear
Receptacle	Near the UPS and easy to reach, so the plug can be pulled quickly

4.3 Mounting in a rack

Use the RLKT rail kit and the two rack ears supplied. The rails carry the weight; the rack ears only hold the UPS in place.

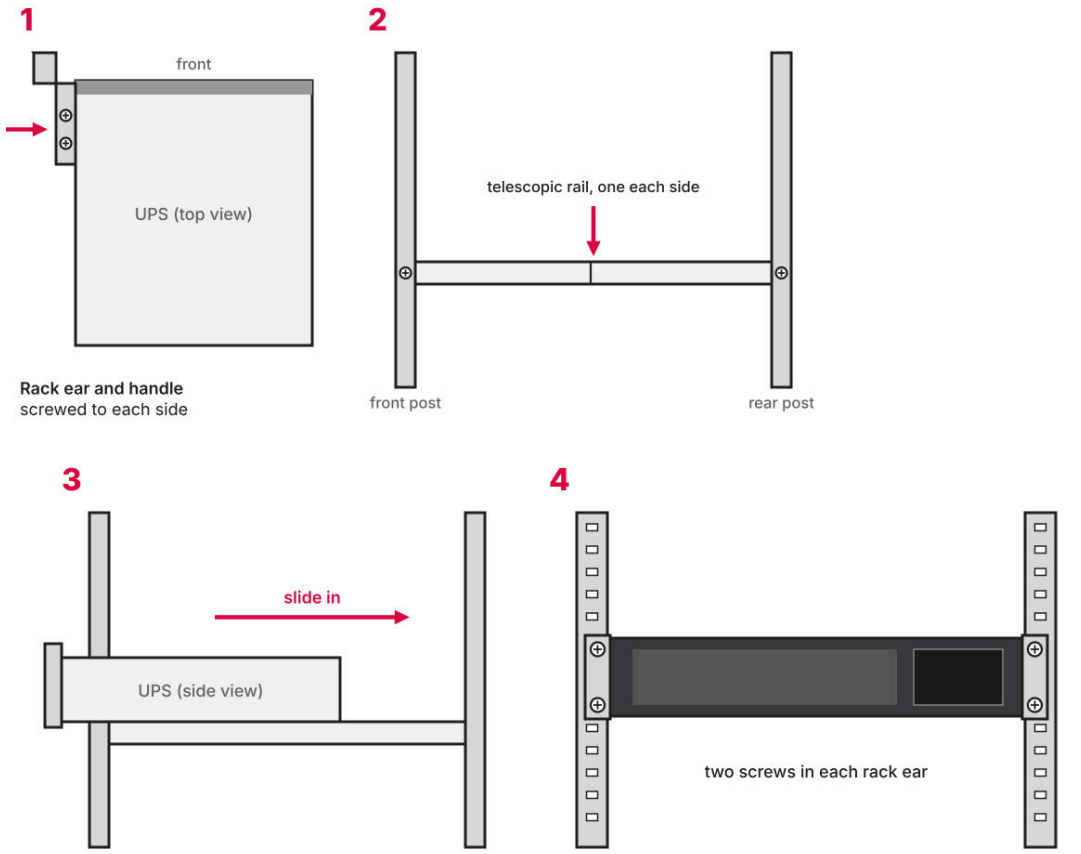

1. Fit a rack ear with its handle to each side of the UPS, at the front.
2. Fit the two telescopic rails to the front and rear posts, at the same height.
3. Slide the UPS onto the rails from the front.
4. Fix each rack ear to the front post with two screws.

FIGURE 4-1 Rack mounting — the four steps

1. Plan the rack: the battery packs go at the bottom, the UPS above them (Figure 4-2).
2. Fit a rack ear to each side of the UPS, at the front (Figure 4-1, step 1).
3. Fit the two RLKT rails to the front and rear posts of the rack, level and at the same height (step 2). Adjust the rail length to the depth of the rack.
4. With a second person, lift the UPS and slide it onto the rails from the front (step 3).
5. Fix each rack ear to the front post with two screws (step 4).
6. Mount each battery pack below the UPS in the same way.

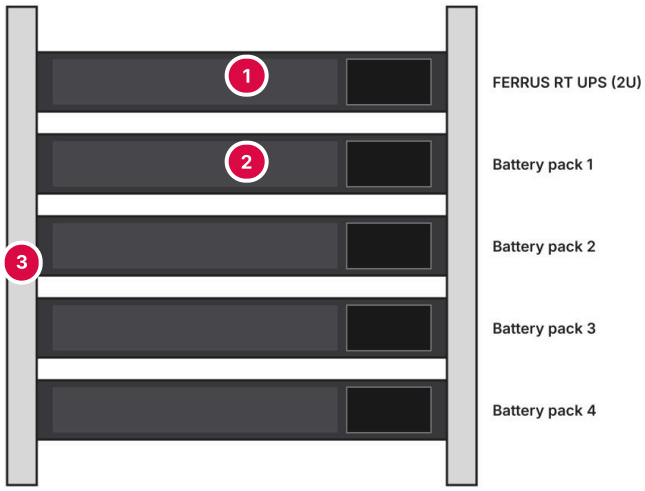

Heaviest units lowest in the rack. Pack height: BAT0424RT 2U · BAT0848RT 3U · BAT1272RT 4U.

1. FERRUS RT UPS, 2U
2. BAT…RT battery packs, one to four, below the UPS
3. Rack posts: every unit on its own rails

FIGURE 4-2 Rack layout — UPS above its battery packs

> ⚠ ***WARNING***
>
> Do not hang the UPS or a battery pack on its rack ears alone. Always support it on rails or a shelf. Mount the heaviest units lowest in the rack so the rack does not tip.

4.4 Mounting as a tower

1. Lay the two stands on a flat, level floor, about as far apart as the depth of the UPS.
2. With a second person, stand the UPS upright with the operation panel at the top.
3. Set the UPS into the two stands, one near the front and one near the rear (Figure 4-3).
4. Check that the UPS stands firmly and does not rock.
5. Leave at least 12 in (300 mm) free at the front and at the rear for the cooling air.

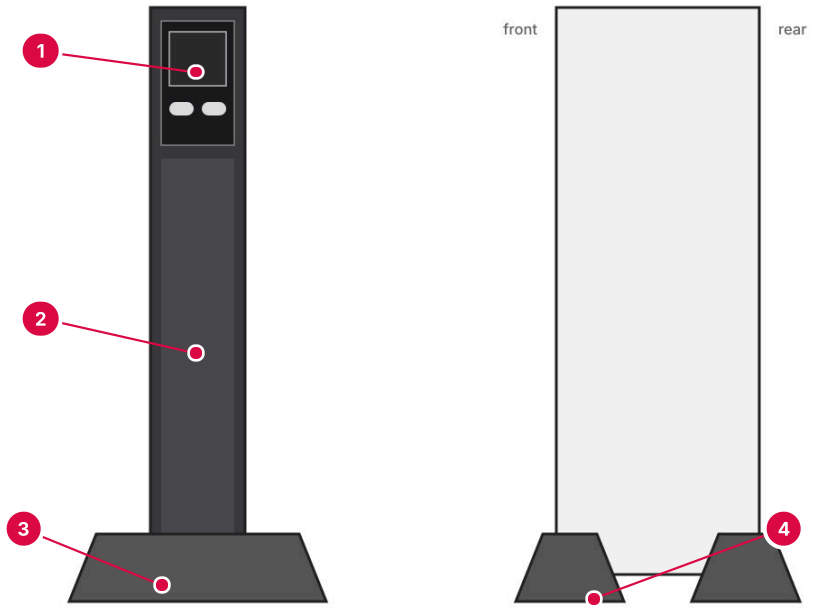

1. Operation panel at the top: it reads upright
2. Front grille: air in
3. Front stand
4. Front and rear stands under the side of the UPS

FIGURE 4-3 Tower position on the two stands

Battery packs used with a tower UPS stand beside it, on a flat floor, each pack upright and stable. Keep the battery cable short and away from walkways.

4.5 Where the connections are

FERRUS RT has no wiring terminals for power: the input, the outputs and the battery packs are plug-in connections, all on the rear panel (Figure 4-4). Figure 4-5 to Figure 4-7 number them as Table 2-5 does, and Table 4-2 gives the connector of each. The pictures are renders of the AEC 3D model, with the slot cover fitted; the 1.5K has the 2K panel (Figure 2-6).

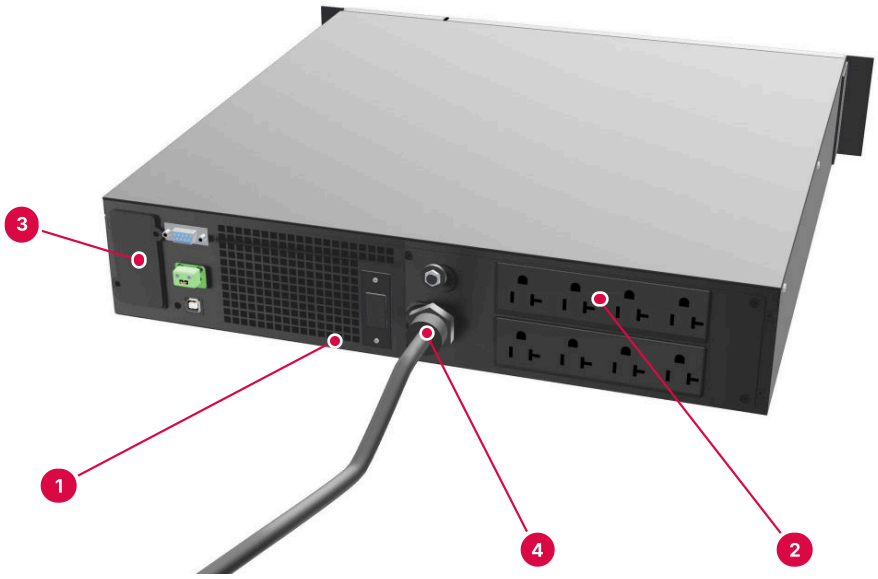

1	Rear panel: all connections (Table 2-5)	3	Intelligent slot
2	Output receptacles	4	Input cord (1.5K, 2K, 3K)

FIGURE 4-4 The rear panel, seen from behind — render of the FERRUS RT 2K

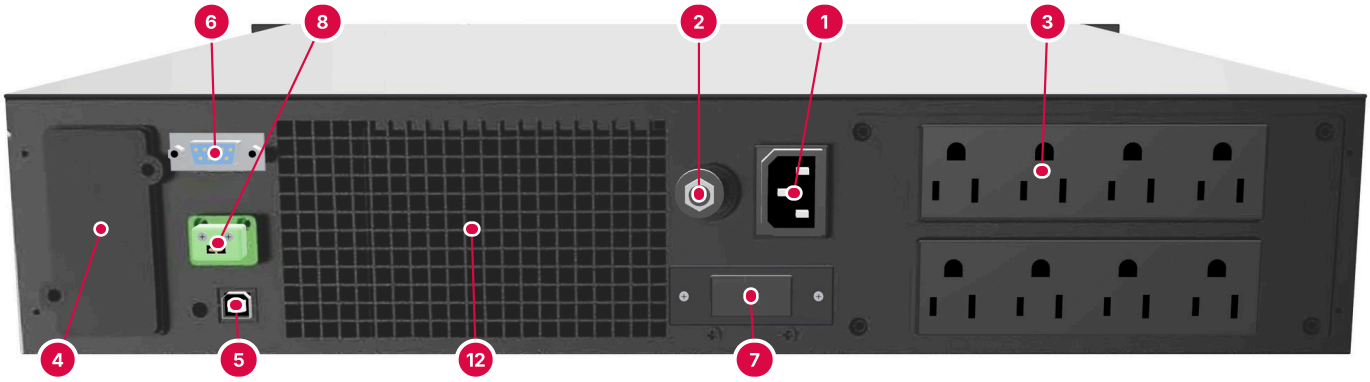

1	Input: IEC C14 inlet	6	RS-232 (DB9)
2	Input surge protector, resettable	7	External battery connector, under its cover
3	Output receptacles, 8 × NEMA 5-15R in two groups	8	EPO terminal (normally closed)
4	Intelligent slot, cover fitted	12	Fan outlet: keep clear
5	USB (optional)		

FIGURE 4-5 Rear-panel connections — FERRUS RT 1K (render)

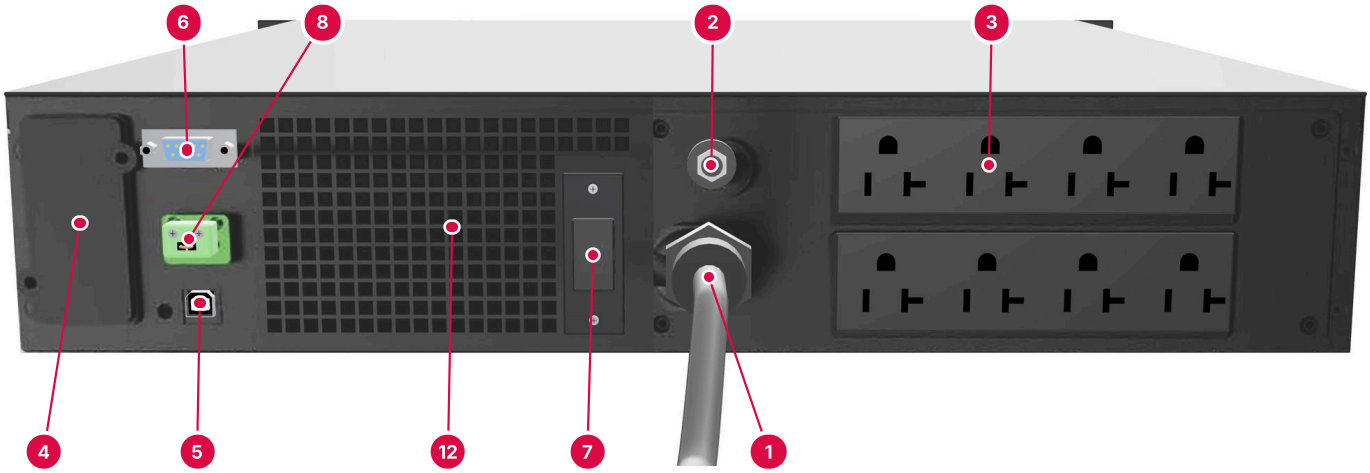

1. Input: attached cord, NEMA 5-20P plug
2. Input surge protector, resettable
3. Output receptacles, 8 × NEMA 5-20R in two groups
4. Intelligent slot, cover fitted
5. USB (optional)
6. RS-232 (DB9)
7. External battery connector, under its cover
8. EPO terminal (normally closed)
12. Fan outlet: keep clear

FIGURE 4-6 Rear-panel connections — FERRUS RT 1.5K and 2K (render)

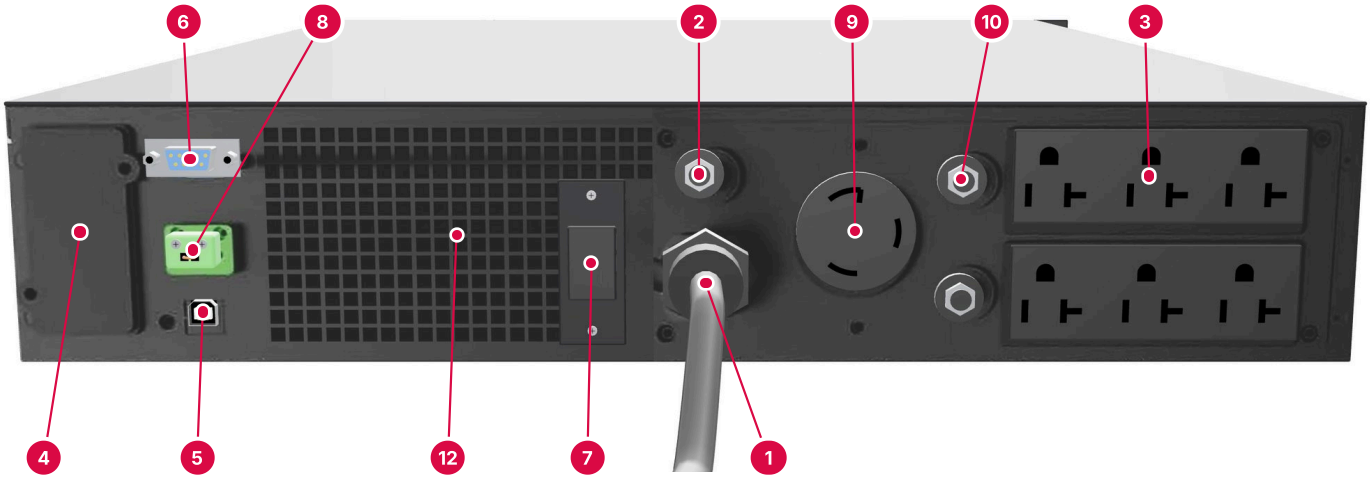

1. Input: attached cord, NEMA L5-30P plug
2. Input surge protector, resettable
3. Output receptacles, 6 × NEMA 5-20R in two groups
4. Intelligent slot, cover fitted
5. USB (optional)
6. RS-232 (DB9)
7. External battery connector, under its cover
8. EPO terminal (normally closed)
9. NEMA L5-30R receptacle, 30 A twist-lock
10. Output surge protectors, resettable
12. Fan outlet: keep clear

FIGURE 4-7 Rear-panel connections — FERRUS RT 3K (render)

TABLE 4-2 Rear-panel connections

Connection (item)	On the UPS	Mates with	Rating	Conductor
Input (1)	1K: IEC C14 inlet · 1.5K, 2K: attached cord, NEMA 5-20P plug · 3K: attached cord, NEMA L5-30P plug	1K: cord supplied, to a NEMA 5-15R receptacle · 1.5K, 2K: NEMA 5-20R receptacle · 3K: NEMA L5-30R receptacle	Max. input current 10 / 20 / 20 / 30 A (1K / 1.5K / 2K / 3K)	Branch circuit per Table 4-3
Input surge protector (2)	Resettable protector	—	Rating not stated: ask AEC	—
Output receptacles (3, 9)	1K: 8 × NEMA 5-15R · 1.5K, 2K: 8 × NEMA 5-20R · 3K: 6 × NEMA 5-20R + 1 × NEMA L5-30R	Plugs of the loads; on the 3K, a load above 20 A on the NEMA L5-30R	Output current 8.3 / 12.5 / 16.6 / 25 A	Cords of the loads
Output surge protectors (10)	3K: resettable, one per receptacle group	—	Rating not stated: ask AEC	—
Intelligent slot (4)	Slot for one card	SNMP-M: RJ45 network cable · DRYCNT: DB9 or 9-pin terminal block (Table 6-4)	Dry contacts: 1 A max. per output; external supply 12–24 V DC	Terminal-block wire size: ask AEC
USB (5)	Optional	Standard USB cable to the PC	—	—
RS-232 (6)	DB9	Serial cable to the PC's COM port (Table 6-3)	—	—
External battery connector (7)	Battery port under a cover; connector type not stated: ask AEC	Battery cable supplied by AEC: plug at the UPS end; RED wire to + and BLACK wire to − of the battery pack, pack breaker OFF while connecting (Figure 4-9)	24 / 48 / 48 / 72 V DC; battery current up to 50 A	Battery cable supplied by AEC only; pack terminal size and torque: ask AEC
EPO (8)	Two-pin green plug, jumper fitted, normally closed	Remote normally-closed switch on a twisted pair (Section 6.4)	—	Wire size and screw torque: ask AEC

4.6 Connecting the input

⚠ WARNING

Connect or disconnect a battery pack only with the UPS switched off and unplugged from the utility receptacle (Section 4.8).

Plug the UPS into a grounded receptacle on its own branch circuit. The breaker of that circuit has the same rating as the plug of the UPS (Table 4-3) and is never larger: NEC 210.21(B) requires the receptacle to match the rating of the branch circuit. The maximum input current in the table is the factory value at low input voltage, full load and full battery recharge; it is not a continuous current.

- Use a breaker without ground-fault (GFCI) or leakage protection: it could trip unnecessarily.
- Do not use an extension cord or a power strip on the UPS input.
- Branch-circuit conductors: copper, 75 °C (167 °F) terminations (NEC 110.14(C)), sized to NEC 310.16.

TABLE 4-3 Input current and branch circuit

Model	UPS input	Max. input current (factory data)	Building breaker, 1-pole	Receptacle	Branch conductor, Cu (NEC 240.4(D))
FERRUS RT 1K	IEC C14 inlet, cord supplied	10 A	15 A	NEMA 5-15R	14 AWG
FERRUS RT 1.5K	Attached cord, NEMA 5-20P	20 A	20 A	NEMA 5-20R	12 AWG
FERRUS RT 2K	Attached cord, NEMA 5-20P	20 A	20 A	NEMA 5-20R	12 AWG
FERRUS RT 3K	Attached cord, NEMA L5-30P	30 A	30 A	NEMA L5-30R	10 AWG

⚠ WARNING

Plug, receptacle and breaker must match. The maximum input current of the 1.5K, 2K and 3K equals the plug rating (20 A, 20 A and 30 A). Do not install a larger breaker and do not change or adapt the plug: contact AEC (+1 786 553 2100) if the plug does not match the receptacle. The 1K uses its supplied cord on a 15 A circuit.

4.7 Connecting the loads

1. Switch the loads off.
2. Plug the loads into the output receptacles (Figure 2-5 to Figure 2-8, item 3). On the 3K, a load drawing more than 20 A goes on the NEMA L5-30R receptacle (item 9).
3. Keep the total load within the UPS rating: 1,000 W per kVA.

⚠ CAUTION

Do not connect equipment that could overload the UPS or draw DC current from it — laser printers, vacuum cleaners, hair dryers, drills or half-wave rectifier loads. Do not plug a surge-protector power strip into the UPS, and never connect a UPS to the output of another UPS.

4.8 Adding battery packs

One to four BAT…RT battery packs of the UPS's DC voltage extend the runtime. Use only the pack listed for your model in Table 4-4. The pack is 19 inches wide and mounts in the rack under the UPS.

TABLE 4-4 BAT…RT battery packs

Code	For	Blocks · DC voltage	W × D × H	Height	Weight
BAT0424RT	FERRUS RT 1K	4 × 12 V 9 Ah · 24 V DC	17.3 × 17.3 × 3.4 in (439 × 439 × 86 mm)	2U	35.4 lb (16.1 kg)
BAT0848RT	FERRUS RT 1.5K, 2K	8 × 12 V 9 Ah · 48 V DC	17.3 × 17.3 × 5.2 in (439 × 439 × 132 mm)	3U	64.8 lb (29.4 kg)
BAT1272RT	FERRUS RT 3K	12 × 12 V 9 Ah · 72 V DC	17.3 × 22.8 × 7 in (439 × 579 × 178 mm)	4U	94.2 lb (42.7 kg)

Each pack holds two strings of blocks in series at the UPS's DC voltage, so one pack adds 18 Ah (two strings × 9 Ah). For example, a BAT0848RT holds 2 strings of 4 × 12 V 9 Ah.

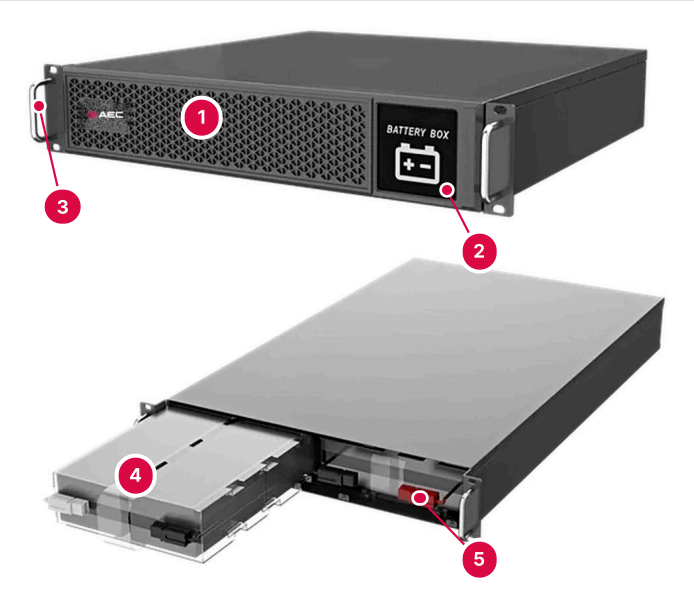

1	Front cover
2	Battery pack label
3	Rack ears and handles
4	12 V 9 Ah blocks in their trays (service only)
5	Internal battery connector

FIGURE 4-8 BAT...RT battery pack, closed (top) and with a battery tray drawn out (bottom) — BAT0424RT, 2U, shown

⚠ *CAUTION*

- External batteries must have the UPS's DC voltage and be of the same type. To get longer runtime you may connect several packs, but always **same voltage, same type**.
- Use at least 40 Ah of battery when the charger is set to 8 A, and at least 20 Ah when it is set to 4 A. A smaller battery can be damaged.
- The battery current can reach 50 A. Use only the battery cable supplied by AEC.

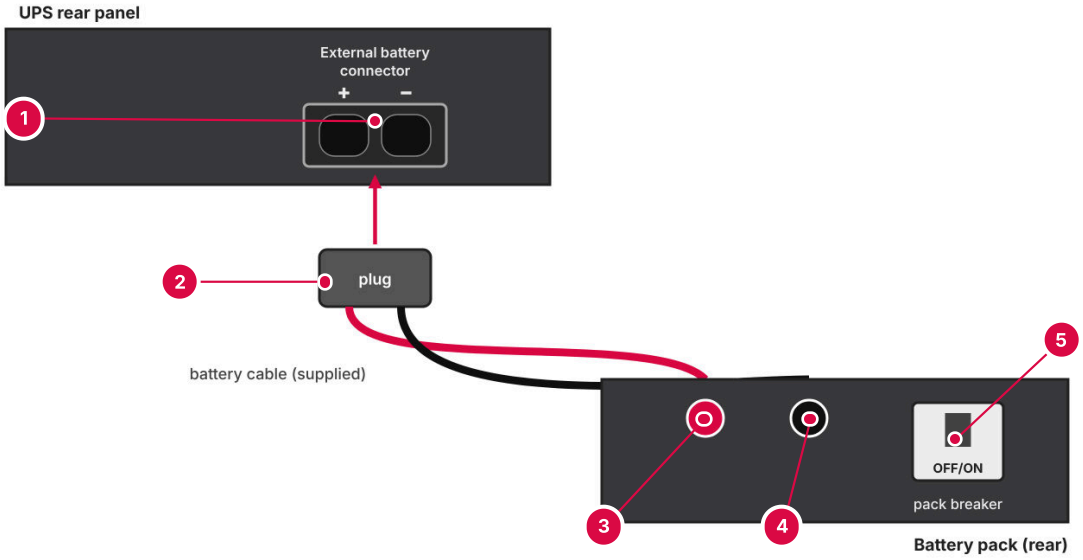

1. External battery connector on the UPS rear panel (item 7)
2. Battery cable plug
3. RED wire to + of the pack
4. BLACK wire to – of the pack
5. Pack breaker: OFF while you connect

FIGURE 4-9 Connecting a battery pack to the UPS

1. Switch the UPS off (Section 5.8) and unplug it from the utility receptacle. Check that the breaker of the battery pack is OFF (Figure 4-9, item 5).
2. Take the battery cable supplied. One end has a plug, the other two wires.
3. Connect the RED wire to "+" and the BLACK wire to "–" of the battery pack (items 3 and 4).
4. Remove the cover of the external battery connector on the UPS rear panel (Figure 2-5 to Figure 2-8, item 7).
5. Plug the battery cable into the external battery connector (items 1 and 2).
6. Close the breaker of the battery pack.
7. Set the battery capacity (total Ah, internal plus packs) and the charge current (Section 5.12).
8. Charge for at least 12 hours before you rely on the full runtime.

4.9 Communication connections

Connect the monitoring and signal cables before you start the UPS: RS-232 or USB for UPS View (Section 6.2), the card in the intelligent slot (Section 6.1, Section 6.3) and the EPO (Section 6.4).

CHAPTER 5

05 Operation

Starting, stopping and transferring the UPS, ECO mode, the alarm, everyday use, the LCD pages and the settings.

5.1 Before the first start

- The UPS is installed as described in Section 4.3 or Section 4.4, and its vents are clear.
- The input is plugged into a grounded receptacle on a branch circuit sized from Table 4-3.
- The loads are switched off, and their total does not exceed the UPS rating.
- Long-backup systems: the battery packs are connected and their breakers closed.
- The battery capacity and charge current are set when packs are added (Section 5.12).

5.2 Turning the UPS on and off at a glance

The UPS has only two keys (Figure 2-4). *Press* means a short press. *Hold* means keep the key pressed for the time given, until the UPS beeps or the LEDs change.

TABLE 5-1 On and off — what to press

I want to	Do this	Then the panel shows
Switch on — utility present	Plug the UPS in, or close its branch breaker. No key: the UPS starts by itself. If INV stays off, press ON/OFF once.	REC flashing, then REC and INV steady green
Switch on — no utility (cold start)	Press ON/OFF once to wake the LCD, then within a few seconds hold ON/OFF 5 s.	INV green, BAT yellow, buzzer beeps
Stop the inverter — the loads stay powered by the utility	Hold ON/OFF 2.5 s.	BYP yellow, INV off. The receptacles are still live.
Start the inverter again	Press ON/OFF once.	INV steady green, BYP off
Switch off completely — utility present	1 · Hold ON/OFF 2.5 s. 2 · Unplug the UPS, or open its breaker. 3 · Long backup: open the breaker of each battery pack.	LCD dark after a few seconds
Switch off — on battery	Hold ON/OFF 2.5 s.	Output off, then LCD dark

NOTICE

ON/OFF alone never removes power from the receptacles while the utility is present: the inverter stops, and the load is fed by the utility through the bypass, without protection. To make the receptacles dead, unplug the UPS as well.

5.3 Starting on utility power

1. Check that the loads are switched off. On long-backup systems, close the breaker of each battery pack.
2. Switch the utility supply on: plug the UPS in, or close its branch breaker.
   You see: the fans start and the LCD lights.

3. Wait. The UPS starts on bypass by itself.
   You see: REC flashing green, BYP steady yellow.
4. The rectifier is ready and the inverter starts by itself.
   You see: REC steady green, INV flashing green.
5. After a few seconds the UPS is in normal mode.
   You see: REC and INV steady green, BYP off, AC/DC/AC lit on the LCD (Figure 2-11, item 1).
6. Switch the loads on one at a time, the largest first. Check the load reading on LCD page 1 (Section 5.11).
7. If the inverter does not start by itself, press ON/OFF once.

5.4 Starting on battery (cold start)

Use the cold start when there is no utility power and the load must run from the battery.

1. Long-backup systems: make sure the breaker of each battery pack is ON.
2. Press ON/OFF once.
   You see: the LCD lights.
3. Within a few seconds, press and hold ON/OFF for 5 s.
   You see: INV green and BAT yellow; the buzzer beeps. The UPS runs in battery mode and feeds the load.
4. Switch the loads on one at a time. The runtime is that of Chapter 7.

5.5 Transferring to bypass and back

1. To bypass: in normal mode, hold ON/OFF for 2.5 s.
   You see: BYP yellow, INV off; BYP lit on the LCD (Figure 2-11, item 4). The load is on the utility, without protection.
2. Back to the inverter: press ON/OFF once.
   You see: INV steady green, BYP off.

5.6 ECO mode

In ECO mode the load runs on the bypass while the utility is good: efficiency is higher, but the load is not protected from utility disturbances. When the utility leaves its window, the inverter takes over.

1. Open the settings and set the system mode to **E** (Section 5.12).
2. Restart the UPS.
   You see: BYP yellow, INV flashing green, ECO lit on the LCD (Figure 2-11, items 5 and 6).
3. To return to full online protection, set the system mode back to **S** and restart the UPS.

5.7 Silencing the alarm

1. Press FUNC until LCD page 1 is shown.
2. Hold FUNC for 1.5 s.
   You see: the muted-buzzer symbol (Figure 2-9, item 11).
3. To unmute, hold FUNC for 1.5 s again on page 1.

5.8 Shutting down

5.8.1 In normal mode (utility present)

1. Save your work and switch off the loads.
2. Hold ON/OFF for 2.5 s.
   You see: INV off, BYP steady yellow: the inverter is off and the load is on bypass.
3. Switch the utility supply off: unplug the UPS or open its branch breaker.
   You see: after a few seconds the UPS switches off completely and the LCD goes dark.
4. Long-backup systems: open the breaker of each battery pack.

5.8.2 In battery mode (utility failed)

1. Save your work and switch off the loads.
2. Hold ON/OFF for more than 2.5 s.
   You see: the output goes off, then the LCD goes dark: the UPS is off.

5.8.3 Restarting the UPS

To restart — for example to apply new settings — shut the UPS down completely as above, wait until the LCD is dark, then start it again (Section 5.3).

> ***NOTICE***
>
> Switch the loads off before you start the UPS, and switch them on one at a time once the UPS runs in normal mode. Switch off all loads before you shut the UPS down.

5.9 Everyday use

5.9.1 During a power outage

1. The UPS switches to battery with no break: the load keeps running, BAT lights and the buzzer beeps.
2. Silence the buzzer if you wish (Section 5.7).
3. Watch the battery: the LCD shows the battery capacity in % (Figure 2-11, battery mode).
4. If the outage lasts, save work and shut the loads down in order, well before the battery is exhausted. LOW lights and code 21 appears when the battery is nearly exhausted. With the SNMP-M card the servers can shut down by themselves (Section 6.1).
5. At the end of discharge the UPS switches its output off to protect the battery (code 12).

5.9.2 When the utility returns

The UPS restarts by itself and recharges the battery. A full recharge takes at least 12 hours: until then the runtime available is shorter.

5.9.3 Good habits

- Leave the UPS switched on all the time: it protects the load and keeps the battery charged.
- Switch new equipment on one at a time, and check the load reading afterwards.
- Look at the panel once a week: normal operation is REC and INV steady green, no alarm.
- Before a long shutdown (vacation, site closed), shut the UPS down completely (Section 5.8) and recharge it within 4 to 6 months (Section 8.7).

5.10 What the panel tells you

TABLE 5-2 What you see, what it means, what to do

What you see	Meaning	What to do
REC and INV steady green; AC/DC/AC lit	Normal online operation	Nothing.
REC flashing, BYP steady	The UPS is starting on bypass	Wait: the inverter starts by itself.
INV green, BAT yellow, buzzer beeps	Utility failure: on battery	See Section 5.9. Save work if the outage lasts.
Battery area shows LOW	Battery nearly exhausted	Shut the loads down now.
BYP steady, INV off	Load on bypass — transferred by hand, overload or a fault	Read the code on page 4 (Section 9.3); remove the cause; press ON/OFF to restart the inverter.
BYP flashing	Bypass alarm: utility out of range	Check the utility; codes 6 and 7.
BAT flashing	No battery, or battery alarm	Check the battery cable and the pack breakers; code 1.
INV flashing, BYP steady, ECO lit	ECO mode	Normal if system mode E was set.
OV LOAD lit	Overload	Reduce the load below the rating; codes 8, 18, 19.
SHORT lit	Output short circuit	Disconnect all loads and find the faulty one; code 11.
Triangle with a number	A warning or fault code	Look the code up in Table 9-3.

5.11 Reading the LCD pages

Press FUNC to step through the four pages. The readings in Figure 5-1 are examples.

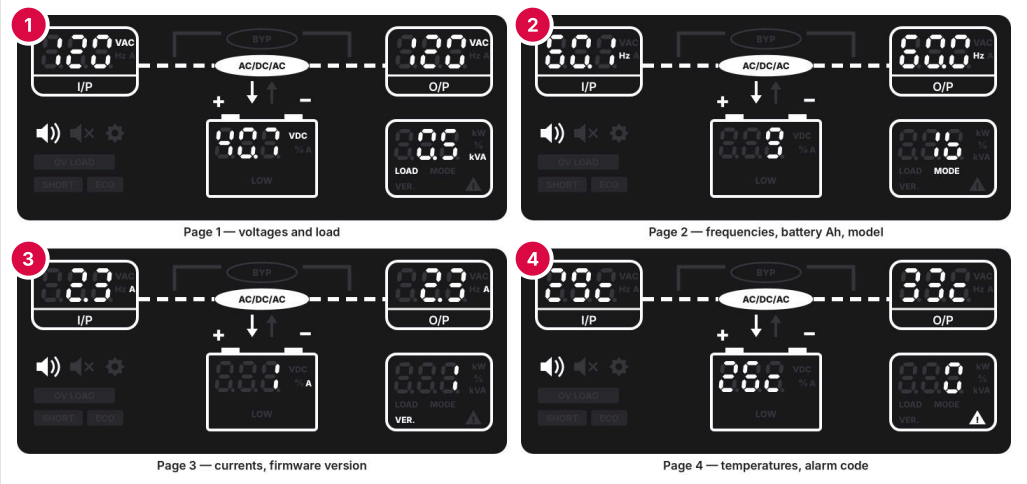

1 Page 1
2 Page 2
3 Page 3
4 Page 4

FIGURE 5-1 The four LCD pages (example readings)

TABLE 5-3 LCD pages

Page	Shows
1	Input voltage (120 V AC), output voltage (120 V AC), battery voltage (40.7 V DC), load (0.5 kVA). The load is shown in turn as %, kW and kVA. Hold FUNC 1.5 s here to silence the buzzer.
2	Input frequency (60.1 Hz), output frequency (60.0 Hz), battery capacity setting (9 Ah; range 9–200 Ah), model code with MODE (1b: 1 kVA; b = standard model, L = long-backup model).
3	Input current (2.3 A), output current (2.3 A), battery current (1 A; arrow down: charging, arrow up: discharging, no arrow: no battery), firmware version with VER. (for example V1.17, shown as 1 then 17).
4	Input and output temperature (29 °C, 33 °C), battery temperature (26 °C), alarm code with the triangle (0 = no alarm). Hold FUNC 1.5 s here to clear a fault.

5.12 Settings

The settings are made with the two keys. The rule is always the same:

TABLE 5-4 Keys in the settings

Key	In the settings
Hold ON/OFF + FUNC together 2.5 s	Open the settings — or leave them, without saving, from any page
FUNC	Change the value shown (step to the next choice)
ON/OFF	Confirm the value and go to the next page

1. Open the settings: hold ON/OFF and FUNC together for 2.5 s.
   You see: SETTING at the bottom of the LCD and the gear symbol; all LEDs flash.
2. On the main page, choose the menu with FUNC and confirm with ON/OFF: **123** rated values and battery, **232** RS-232, **234** SNMP card, **485** RS-485, **567** restore defaults (Table 5-5).
3. On each page, press FUNC until the value you want is shown, then press ON/OFF to confirm it and move on.
4. After the last page the LCD shows the settings made. Press ON/OFF to exit.
5. Restart the UPS (Section 5.8.3). The new settings take effect after the restart.

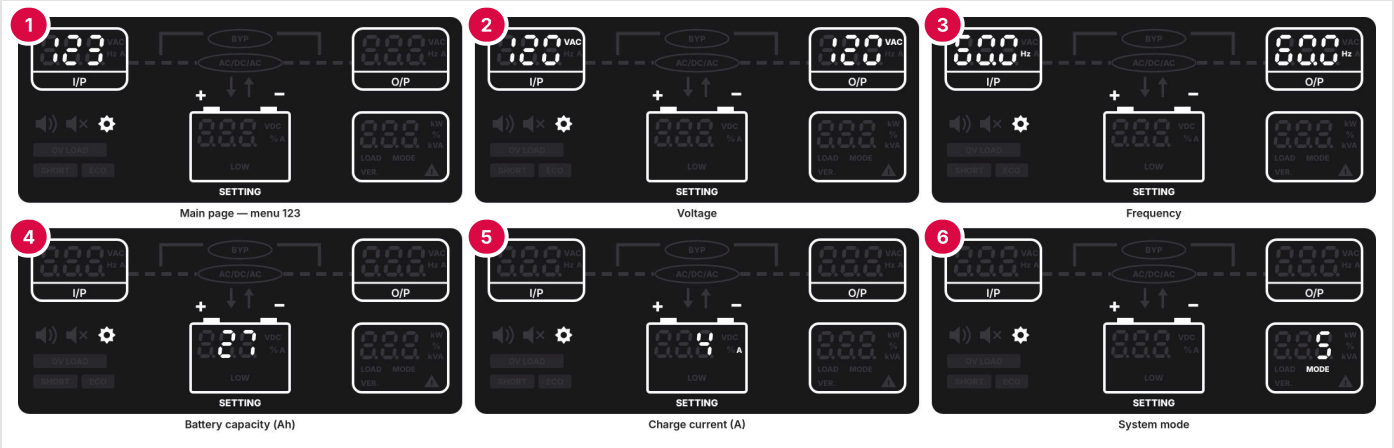

1. Main page: menu 123 selected
2. Input/output voltage: 100, 110, 115 or 120 V AC
3. Frequency: 60 Hz (50 Hz is a setting for other markets)
4. Battery capacity in Ah, 9–200 Ah (total of internal battery and packs)
5. Charge current: 1 A standard; 1–8 A with battery packs
6. System mode: S normal (online) or E ECO

FIGURE 5-2 Menu 123 — the setting pages in order (values of the example below)

5.12.1 Example — FERRUS RT 2K with one BAT0848RT battery pack

The internal battery is one string of 4 × 12 V 9 Ah (9 Ah). The BAT0848RT adds two strings of 4 × 12 V 9 Ah (18 Ah). Total: 27 Ah.

1. Hold ON/OFF + FUNC 2.5 s. On the main page select **123** with FUNC; confirm with ON/OFF.
2. Voltage page: leave 120 V; press ON/OFF.
3. Frequency page: 60 Hz; press ON/OFF.
4. Battery capacity: press FUNC until the value closest to 27 Ah is shown; press ON/OFF.
5. Charge current: 4 A (the battery is above 20 Ah but below 40 Ah, see Section 4.8); press ON/OFF.
6. System mode: S (normal online); press ON/OFF. Press ON/OFF again on the summary page to exit.
7. Restart the UPS. On LCD page 2, check the battery capacity shown.

TABLE 5-5 Settings

Setting	How
Main page	Choose the menu with FUNC, confirm with ON/OFF: 123 rated values · 232 RS-232 · 234 SNMP card · 485 RS-485 · 567 restore defaults.
Input / output voltage	First page after 123. Choose 100, 110, 115 or 120 V AC with FUNC (one value for input and output); confirm with ON/OFF. In the US, use 120 V.
Input / output frequency	Choose 60 Hz with FUNC; confirm with ON/OFF. 50 Hz is a setting for other markets; the input accepts 60 Hz ±5 Hz.
Battery capacity	Choose the installed battery capacity in Ah, internal battery plus packs; confirm with ON/OFF.
Charge current	Standard: 1 A. With battery packs: 1 to 8 A — at least 20 Ah of battery for 4 A, 40 Ah for 8 A. Choose with FUNC, confirm with ON/OFF.
System mode	S normal (online) · E ECO. Choose with FUNC, confirm with ON/OFF.
Exit	The settings are shown on the LCD; press ON/OFF to exit. They apply after the UPS restarts.

Setting	How
Baud rate	After 232, 234 or 485 on the main page: 96 = 9,600, 12 = 1,200, 24 = 2,400, 48 = 4,800, 192 = 19,200 baud.
Communication ID	1 to 32; confirm with **ON/OFF** to go to the protocol.
Protocol	0cc Modbus · 1cc RTU · 2cc NetAgent. Confirm with **ON/OFF** to finish.
Restore defaults	Menu 567 returns the settings to their factory values. Set the battery capacity and charge current again afterwards.

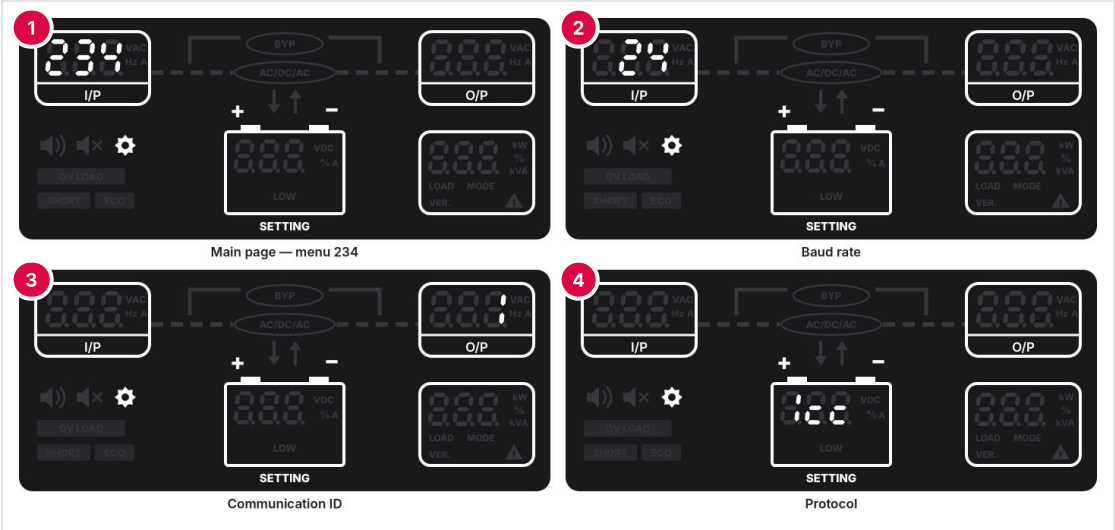

1. Main page: menu 234 (SNMP card) selected
2. Baud rate: 24 = 2,400 baud
3. Communication ID: 1 to 32
4. Protocol: 0cc Modbus · 1cc RTU · 2cc NetAgent

FIGURE 5-3 Menus 232, 234 and 485 — the communication pages (menu 234 shown)

CHAPTER 6

06 Communication and monitoring

RS-232 and USB, the intelligent slot with the SNMP-M or dry-contact card, the UPS View software and the EPO input.

TABLE 6-1 Communication ports

Port	Use
RS-232	DB9 on the rear panel, standard (item 6). For UPS View: Modbus protocol, 1,200 to 19,200 baud and ID 1 to 32, set in menu 232.
USB	Optional, on the rear panel (item 5), for monitoring software.
Intelligent slot	One slot (item 4) for an optional card: SNMP-M network card or DRYCNT dry-contact card. The card settings are in menu 234.
EPO	Two-pin terminal (item 8), normally closed: opening the loop turns the output off.
RS-485	There is no RS-485 port on the FERRUS RT rear panel. Leave menu 485 at its default value.

NOTICE

The RS-232 port and the intelligent slot share the same communication line. Use the RS-232 port with no card fitted, or monitor through the card — not both at the same time.

6.1 SNMP-M network card

The SNMP-M card connects the UPS to the network: web pages, SNMP v1/v2c/v3, Modbus TCP/IP and MQTT. It reports the UPS status and alarms and can shut down servers on a utility failure.

6.1.1 Fitting the card

1. Shut the UPS down (Section 5.8) and unplug it.
2. Remove the cover of the intelligent slot (Figure 2-5, item 4).
3. Slide the card into the slot until it is fully seated, and fix it with the screws of the cover.
4. Connect the card to the network with an RJ45 cable, then start the UPS.
   You see: the green PWR LED of the card lights.

6.1.2 Setting up the card

The card and the UPS must use the same baud rate and address. On the card web page (Sys Set › Device), the FERRUS RT values are: protocol **Megtec** (the card's name for the FERRUS protocol), port **Uart · Port A**, **2,400 baud**, address **1**.

1. On the UPS, open the settings and choose menu **234** (Figure 5-3). Set the baud rate to **24** (2,400 baud) and the ID to **1**. Leave the protocol at its factory value. Exit and restart the UPS.
2. On a PC in the same network, run IPSearch (AEC app › Support › Downloads › SNMP › SNMP-M). It lists the card with its IP and MAC address.
3. Select the card › NetWork set › Static IP: enter a free IP address, the subnet mask and the gateway (ask your IT department), or choose Obtain IP for DHCP. Press Set.

4. Press Web page (or type the card's IP address in a browser) and log in as admin.
5. In the card's device settings choose protocol Megtec, port Uart · Port A, baud rate 2400, address 1 — the same values as in menu 234.
   You see: the yellow DATA LED stops flashing when the card reads the UPS.
6. Set up e-mail alarms and, if used, SNMP traps (port 162) or Modbus TCP.

If the DATA LED keeps flashing, check that menu 234 and the card use the same baud rate and address, then call AEC service.

TABLE 6-2 SNMP-M card indicators

LED	State	Meaning
PWR (green)	On · Off	Card powered · not powered
SYS (red)	Off · Flashing · On	System normal · general alarm · serious alarm
DATA (yellow)	Off · Flashing	Communication with the UPS normal · abnormal

⚠ CAUTION

The card's default web accounts (admin, full rights; user, view only) and their passwords are given by AEC technical service. Change both passwords at your first login.

6.2 UPS View software

UPS View monitors and sets up one UPS from a Windows PC through a direct cable, without the network card. Download it from the AEC app (Support › Downloads › SNMP › SNMP-M), unpack it and run the program inside: no installation is needed. UPS View talks Modbus (ASCII or RTU) to the UPS.

TABLE 6-3 Connecting UPS View

Connection	How
RS-232	A serial cable from the UPS's RS-232 port (item 6) to the PC's COM port. On PCs without a COM port, use a USB-to-serial adapter.
USB	A standard USB cable, where the USB port is fitted (item 5). Some PCs need a driver.

1. On the UPS, open the settings and choose menu **232** (Section 5.12). Set the baud rate (for example 96 = 9,600 baud), the ID (address) **1** and the protocol **0cc Modbus** or **1cc RTU**. Exit and restart the UPS.
2. Remove any card from the intelligent slot. Connect the cable to the UPS's RS-232 port (or USB, where fitted).
3. Start UPS View. Choose Equip Type **1/1(1-3kVA)**, the PC's COM port (Windows Device Manager › Ports), the baud rate, the Modbus mode (ASCII or RTU) and address 1 — the same values as in menu 232.
   You see: UPS View shows the live data, the status, the alarms and the settings of the UPS.

If UPS View gets no answer, check the cable and that the baud rate, mode and address match menu 232.

✓ **TIP** The AEC UPS View Monitor User Manual (AEC-UM-UPSV-US) describes every UPS View page; the SNMP-M User Manual describes the card's web interface. Both are in the AEC app, Support › Downloads › SNMP › SNMP-M.

6.3 Dry-contact card

The DRYCNT dry-contact card fits the intelligent slot like the SNMP-M card. It gives the UPS status as contacts and accepts a remote shutdown input, on a DB9 port or on a 9-pin terminal block. The maximum current of each output is 1 A. The outputs and the remote shutdown use an external supply of 12–24 V DC.

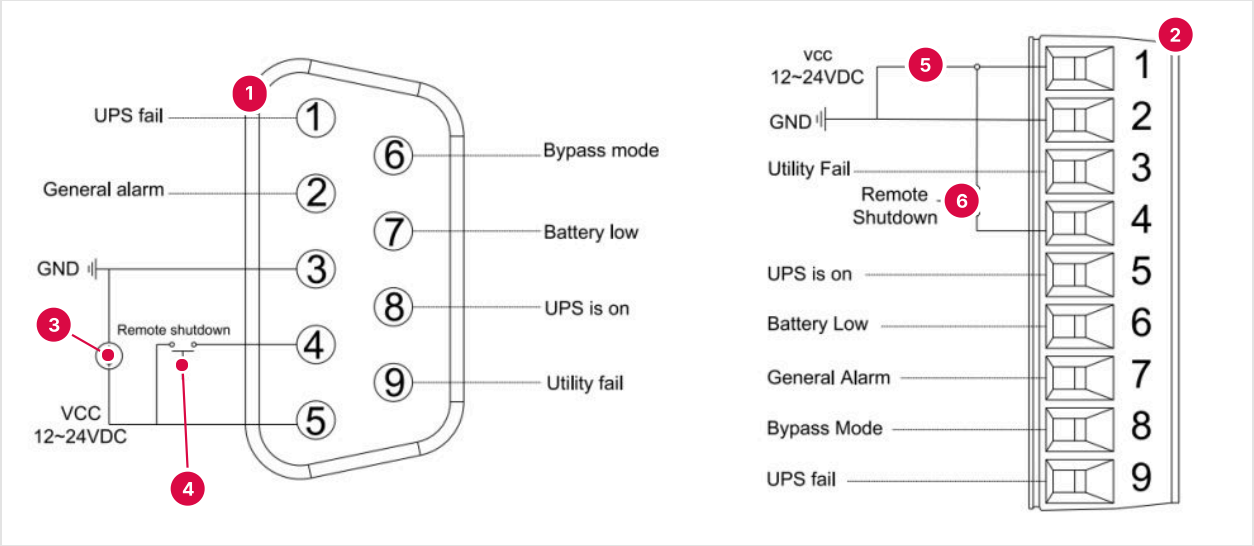

1. DB9 port, pins 1–9
2. Terminal block, terminals 1–9
3. External supply 12–24 V DC: + to pin 5, – to GND pin 3 (DB9)
4. Remote shutdown contact, pin 4 (DB9)
5. External supply 12–24 V DC: terminal 1 (+) and terminal 2 (GND)
6. Remote shutdown contact, terminal 4

FIGURE 6-1 Intelligent slot dry-contact card — DB9 port (left) and terminal block (right)

TABLE 6-4 Dry-contact card pins

Signal	DB9	Terminal	Function
UPS fail	1	9	Open (NO) to pin/terminal 1 if the UPS has a fault; otherwise closed (NC).
General alarm	2	7	Open (NO) on any alarm; otherwise closed (NC).
GND	3	2	External power supply ground.
Remote shutdown	4	4	Close the contact to activate: with utility present the rectifier and inverter stop; in battery mode the UPS switches off completely.
Power supply	5	1	External supply, 12–24 V DC (common).
Bypass mode	6	8	Closed (NC) when the UPS is on bypass; otherwise open (NO).
Battery low	7	6	Open (NO) when the battery is low; otherwise closed (NC).
Normal mode	8	5	Closed (NC) in normal mode; otherwise open (NO).
Utility fail	9	3	Open (NO) on utility failure; otherwise closed (NC).

6.4 Emergency power off (EPO)

The EPO terminal (rear panel, item 8) is closed in normal use by a jumper. Opening it stops the rectifier and the inverter output at once, and code 2 appears. To use a remote emergency switch, wire a normally-closed (NC) switch in place of the jumper.

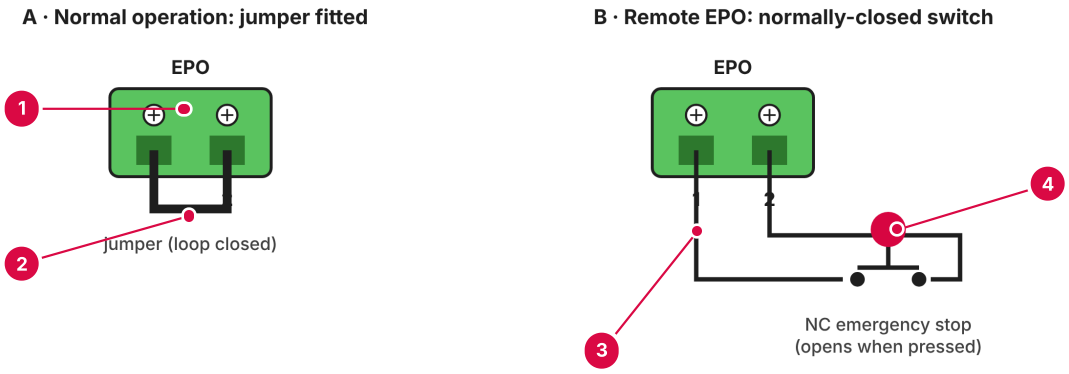

1. EPO terminal, two pins (rear panel item 8)
2. Jumper across pins 1 and 2: loop closed, UPS runs
3. Pair of wires to the remote switch
4. Remote emergency stop, normally closed: pressing it opens the loop

FIGURE 6-2 EPO wiring — jumper fitted (A) and remote normally-closed switch (B)

1. Shut the UPS down and unplug it.
2. Pull the green EPO plug off the rear panel and remove the jumper.
3. Connect a twisted pair from the remote NC switch to the two pins of the plug (Figure 6-2, B). Tighten the screws.
4. Push the plug back onto the rear panel.
5. Start the UPS and check that REC and INV go green.

After an EPO. Release or reset the remote switch (or refit the jumper) to close the loop, shut the UPS down completely, then start it again (Section 5.3).

07

CHAPTER 7

Battery and runtime

Runtimes with the internal batteries and with one to four BAT...RT packs, at full load and at partial load.

Runtimes are for new, fully charged batteries at 77 °F (25 °C). At lighter loads the runtime is longer; with aged, hot or cold batteries it is shorter.

TABLE 7-1 Runtime at full load (minutes)

Set-up	1K · 2K · 3K	1.5K
Internal batteries	4.2	6
+ 1 battery pack	10	14.3
+ 2 battery packs	23.7	34
+ 3 battery packs	39.4	56.4
+ 4 battery packs	56.4	80.8

TABLE 7-2 Runtime by load, FERRUS RT 1K, 2K and 3K (minutes)

Set-up	10 %	20 %	25 %	30 %	40 %	50 %	60 %	70 %	80 %	90 %	100 %
Internal batteries	74.6	31.3	25.1	18.9	13.2	10	7.9	6.5	5.5	4.8	4.2
+ 1 pack	177.3	74.6	59.8	44.9	31.3	23.7	18.9	15.6	13.2	11.4	10
+ 2 packs	421.7	177.3	142.1	106.8	74.6	56.4	44.9	37	31.3	27.1	23.7
+ 3 packs	700.1	294.3	235.8	177.3	123.8	93.6	74.6	61.5	52	44.9	39.4
+ 4 packs	1,003.1	421.7	337.9	254.1	177.3	134.2	106.8	88.1	74.6	64.3	56.4

TABLE 7-3 Runtime by load, FERRUS RT 1.5K (minutes)

Set-up	10 %	20 %	25 %	30 %	40 %	50 %	60 %	70 %	80 %	90 %	100 %
Internal batteries	106.8	44.9	36	27.1	18.9	14.3	11.4	9.4	7.9	6.9	6
+ 1 pack	254.1	106.8	85.5	64.3	44.9	34	27.1	22.3	18.9	16.3	14.3
+ 2 packs	604.2	254.1	203.6	153	106.8	80.8	64.3	53.1	44.9	38.8	34
+ 3 packs	1,003.1	421.7	337.9	254.1	177.3	134.2	106.8	88.1	74.6	64.3	56.4
+ 4 packs	1,437.1	604.2	484.1	364	254.1	192.2	153	126.2	106.8	92.2	80.8

Runtimes above 8 hours are calculated values; the battery self-discharge and the charger limit the practical runtime. Source: AEC published runtime data.

CHAPTER 8

08 Maintenance

Routine checks, battery care and the automatic battery test, component life, battery replacement, handling, storage and transport.

8.1 Maintenance schedule

TABLE 8-1 Maintenance schedule

Interval	Task
Every week	Look at the panel: REC and INV steady green, no alarm (Section 5.10).
Every 6 months	Check the UPS status: no fault indicator or alarm, the UPS in normal mode (not on bypass), the battery not discharging with utility present. Check that the vents are clear and the fans run. Check that the plugs and the battery cable are firmly seated.
Every 6 months	Clean the outside with a dry cloth (UPS switched off and unplugged).
Every 4–6 months, if unused	Recharge the battery for at least 12 hours (Section 8.7).
Every 2 months, hot climates	Discharge and recharge the battery (at least 12 hours of charge).
3–5 years	Replace the batteries as a full set, same type and number (Section 8.5).

8.2 Battery care and battery test

- The batteries are sealed, maintenance-free valve-regulated lead-acid (VRLA) blocks of 12 V 9 Ah, inside the UPS and in the BAT...RT packs.
- Charge for at least 12 hours before first use and after a long discharge.
- Battery life is normally 3 to 5 years; it is shorter at high temperature. It is best at 68–77 °F (20–25 °C).
- Replace all batteries at the same time, with the same number and type.
- **Battery test.** The UPS tests the battery by itself: it transfers to battery for 20 seconds and checks the battery. If it finds a problem, fault code 13 appears (Table 9-3). The panel has no key for a manual battery test.

8.3 Component life

Some components wear with time and heat. Planned replacement, before they fail, keeps the UPS available.

TABLE 8-2 Typical service life at 77 °F (25 °C)

Component	Typical life	Action
Cooling fans	5–7 years	Replaced when worn or at the end of the period; a failed fan raises an alarm (code 17).
DC bus electrolytic capacitors	7–10 years	Replaced by AEC service.
AC filter capacitors	5–7 years	Replaced by AEC service.
VRLA batteries (5-year design life)	3–5 years	Replace as a full set (Section 8.5).

Life is shorter at higher temperature, in dusty rooms and under continuous heavy load. The figures are typical for online UPS; AEC service plans the replacement during preventive maintenance.

8.4 Battery life and temperature

VRLA batteries age faster in heat. As a rule of thumb, their service life roughly halves for every 18 °F (10 °C) above 77 °F (25 °C).

TABLE 8-3 Typical effect of temperature on VRLA battery life

Average room temperature	Relative life	Typical life
68–77 °F (20–25 °C)	100 %	3–5 years
86 °F (30 °C)	about 70 %	2–3.5 years
95 °F (35 °C)	about 50 %	1.5–2.5 years
104 °F (40 °C)	about 35 %	1–1.7 years

Signs that the batteries need replacing:

- The runtime is clearly shorter than in Table 7-1 with a fully charged battery.
- Fault code 13 (battery self-test) appears.
- A block is swollen, cracked or leaking — switch the UPS off and contact AEC service.
- The batteries are older than 3–5 years.

8.5 Replacing the internal battery

⚠ DANGER

Do not replace the internal battery while the UPS is running: hazard to personnel. Battery replacement must be done by qualified personnel.

1. Shut the UPS down (Section 5.8) and unplug it. Open the breaker of each battery pack and unplug the battery cable.
2. Remove the UPS cover.
3. Remove the battery clamps.
4. Disconnect the battery cables one by one, then take the battery packs out one by one.
5. Assemble the new blocks into their packs as shown in Appendix B, and reconnect the cables.
6. Refit the clamps and the cover. Charge for at least 12 hours.

The blocks in the BAT...RT packs are replaced by AEC service.

8.6 Battery handling and disposal

⚠ WARNING

- Remove jewelry, watches and other metal objects. Wear rubber gloves and boots; use tools with insulated handles.
- Replace connection cables only with original parts from AEC: an undersized cable can overheat and cause a fire.
- Do not dispose of batteries in fire: they can explode. Do not open or damage them: the electrolyte is toxic and harmful to the skin and eyes.
- Never short the battery terminals.
- The battery circuit is not isolated from the input: check for voltage between the battery terminals and ground before you touch them.
- Even with the input disconnected, the internal circuits stay connected to the batteries. Open the pack breakers before any work.
- Recycle used batteries according to local regulations. Lead-acid batteries must be recycled.

8.7 Storage and transport

- Store the UPS indoors, dry, at −4 to 158 °F (−20 to 70 °C). The battery lasts longest stored at 32–77 °F (0–25 °C).
- Recharge a stored UPS and its battery packs every 4 to 6 months, for at least 12 hours.
- Transport the UPS and the packs in their original packaging, in the position shown on the carton.

CHAPTER 9

09 Troubleshooting

Checking the UPS, common symptoms, and the fault and warning codes shown on LCD page 4.

✓ TIP WhatsApp and phone +1 786 553 2100, always available · e-mail service.us@aecups.com. Send the model, the serial number and a photo of the display and of the alarm: it is the fastest way to a solution.

9.1 Checking the UPS

Check the UPS every six months:

- Is a fault shown, or is the UPS sounding an alarm?
- Is the UPS running on bypass? Normally it runs in normal (inverter) mode. If it is on bypass and you did not put it there, read the code (Section 9.3) and contact AEC service.
- Is the battery discharging? With normal utility power, the battery should not discharge. If the UPS is in battery mode with utility present, contact AEC service.

9.2 Symptoms and remedies

TABLE 9-1 Common symptoms

Symptom	What to do
The UPS does not start; the LCD stays dark	Check that the input plug is in a live receptacle and its breaker is on. Press the input surge protector on the rear panel (item 2) to reset it. Without utility power, start from the battery (Section 5.4).
The LCD is on but there is no output	The inverter is not started: press ON/OFF. If a code is shown, look it up in Table 9-3. On the 3K, check the output surge protectors (item 10).
The UPS runs on battery although the utility is present	The input surge protector has tripped (code 4), line and neutral are reversed (code 5), or the input is outside 55–150 V (90–150 V at full load).
The building breaker trips when the UPS is switched on	The branch circuit is smaller than Table 4-3 requires, or too many loads start at once. Use a circuit of the right rating and switch the loads on one at a time.
An alarm sounds when the loads are switched on	Start-up current or overload: switch the loads on one at a time, the largest first; keep the total within the rating.
The load is on bypass and does not return	Read the code. After an overload, reduce the load: the UPS returns to the inverter by itself (code 19). After 5 transfers in an hour it stays on bypass (code 10).
The runtime is shorter than expected	Charge for at least 12 hours; check the load reading and the battery capacity setting (page 2); replace batteries older than 3–5 years.
The monitoring software shows no data	Check the RS-232 or USB cable and that no card is in the intelligent slot. The baud rate, ID and Modbus mode set in menu 232 must match UPS View (Equip Type 1/1(1-3kVA)).
The SNMP-M card shows no UPS data (DATA LED flashing)	Menu 234 and the card must use the same baud rate (2,400) and address (1) (Section 6.1.2).
The computers halt on a power failure although the UPS runs	The grounding is poor: the voltage between neutral and ground is too high. Have an electrician check the receptacle.

9.3 Fault and warning codes

When something is wrong, the LCD shows a triangle with a number, and the buzzer may sound. The number is the code.

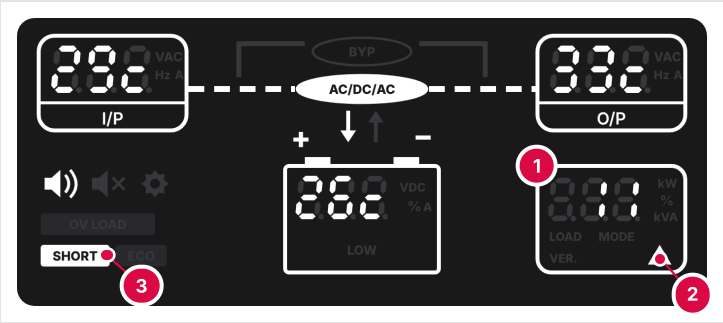

1. Code number: 11
2. Triangle: an alarm code is shown
3. SHORT lit for code 11

FIGURE 9-1 LCD page 4 with a code — example, code 11 (output short circuit)

1. Press FUNC until LCD page 4 is shown. The number beside the triangle is the code (Figure 9-1); 0 means no alarm.
2. Find the code in Table 9-3 and do what the last column says.
3. When the cause is removed, clear the code: on page 4, hold FUNC 1.5 s.
4. If the code comes back, or it is a fault, write down the code and call AEC technical support (24/7, +1 786 553 2100).

TABLE 9-2 The two kinds of code

Type	What it means
Warning	The UPS keeps working, but something needs attention — the utility, the load, the battery or the ventilation. Most warnings clear by themselves when the cause is removed.
Fault	A part of the UPS or of the battery has failed. The UPS protects itself; the load is moved to the bypass when the utility is good. Call AEC service.

TABLE 9-3 Fault and warning codes

Code	Type	Shown for	Cause — what the UPS does	What to do
1	Warning	Battery not connected	Pack breaker open or battery cable unplugged: no backup if the utility fails.	Close the breaker of each battery pack; check the battery cable and its plug in the rear connector. Internal battery only: call AEC service.
2	Warning	Emergency power off (EPO)	The EPO loop is open: the output is off.	Close the loop — refit the jumper across EPO pins 1–2, or reset the remote EPO switch — then restart the UPS (Section 6.4).
3	Warning	Inverter capacity low	The load is above the capacity the inverter can supply.	Switch off non-essential loads, or use a UPS of higher rating.
4	Warning	Input voltage abnormal	Utility failure, or the input surge protector has tripped: the UPS runs on battery.	Check the utility and the branch breaker. Utility good but still on battery: press the input surge protector reset (item 2).
5	Warning	Line and neutral reversed	The receptacle feeding the UPS has line and neutral swapped.	Have an electrician correct the receptacle wiring.

Code	Type	Shown for	Cause — what the UPS does	What to do
6	Warning	Bypass voltage abnormal	The utility is outside the bypass range, or off: the UPS cannot transfer to bypass.	Check the utility voltage at the receptacle.
7	Fault	Bypass failure	Bypass input abnormal: there is no backup path if the inverter stops.	Restore the utility supply. Utility normal: call AEC service.
8	Warning	Overload on bypass	The load is on bypass and above the rating.	Reduce the load below 95 % of the rating.
9	Warning	Bypass overload time-out	The overload on bypass lasted too long: the UPS switched the output off.	Reduce the load, restart the UPS (Section 5.3), then switch the loads on one at a time.
10	Warning	Too many transfers	More than 5 transfers between inverter and bypass in 1 hour: the UPS stays on bypass.	Find and remove the overloading or short-circuited load; restart the UPS, or wait for the inverter to restart by itself.
11	Warning	Output short circuit	A short circuit on the output — a load, a cord or a power strip.	Unplug all loads and check the cords; reconnect the loads one at a time to find the faulty one.
12	Warning	End of discharge	Battery exhausted after a long outage: the output stays off until the utility returns.	Wait for the utility: the UPS restarts and recharges by itself. Next time, shut the loads down at code 21.
13	Fault	Battery self-test	The 20-second battery test found a problem.	Check the battery cable and connections and charge 12 h. If it comes back, replace the batteries (Section 8.5).
14	Fault	Rectifier	DC bus over- or under-voltage or unbalance, rectifier start failure, input fuse open.	Call AEC service.
15	Fault	Inverter	Inverter over- or under-voltage.	Call AEC service.
16	Warning	Rectifier over-temperature	Rectifier heatsink too hot, or its temperature sensor not connected.	Check that the fans run and the vents are clear; room within 32–104 °F (0–40 °C). If it comes back: AEC service.
17	Fault	Fan failure	One or more fans stopped, or a fan wire is loose.	Call AEC service.
18	Warning	Overload on inverter	The load is above the UPS rating.	Reduce the load below the rating.
19	Warning	Inverter overload time-out	The overload lasted too long: the load is moved to bypass, if the bypass is available.	Reduce the load below 95 %: the UPS returns to the inverter by itself.
20	Warning	Inverter over-temperature	Inverter heatsink too hot, or its temperature sensor not connected.	As code 16.
21	Warning	Battery low	On battery, and the battery is nearly exhausted.	Save your work and shut the loads down now, or restore the utility.
22	Warning	Input neutral lost	The neutral of the input is disconnected.	Check the receptacle and the input cord (electrician).
23	Fault	Bypass fan failure	One or more fans stopped, or a fan wire is loose.	Call AEC service.
24	Warning	Manual shutdown	Not a failure: the inverter was stopped with ON/OFF; the output is off or on bypass.	Nothing to fix. Press ON/OFF to start the inverter again.

Code	Type	Shown for	Cause — what the UPS does	What to do
25	Fault	Charger	No charger output: the battery is not being charged.	Call AEC service.
26	—	Not used	—	—
27	Warning	Input overcurrent	Abnormally high current into the rectifier.	Call AEC service.
28	Warning	Auxiliary power supply lost	Internal auxiliary supply abnormal.	Call AEC service.
29	Fault	UPS model	Model identification abnormal.	Call AEC service.
30	Fault	Output CT	Output current sensor connected in reverse (internal).	Call AEC service.

TABLE 9-4 Codes by topic

Topic	Codes	Check first
Utility and input	4 · 5 · 6 · 7 · 22 · 27	The receptacle, the branch breaker and the input surge protector
Load and output	3 · 8 · 9 · 10 · 11 · 18 · 19 · 24	The total load (LCD page 1), the cords and power strips
Battery	1 · 12 · 13 · 21 · 25	The pack breakers and battery cable; a 12-hour charge
Heat and fans	16 · 17 · 20 · 23	The vents, the fans and the room temperature
EPO and internal	2 · 14 · 15 · 28 · 29 · 30	The EPO loop; otherwise call AEC service

i NOTE When you report a fault, give: the UPS model and serial number, the codes, the LEDs and buzzer, the power conditions, the load, and the battery set-up (internal battery, number of packs).

CHAPTER 10

10 Specifications

Electrical, mechanical and environmental data of the four models and of the battery packs.

TABLE 10-1 FERRUS RT specifications by model

	1K	1.5K	2K	3K
Power (VA / W)	1,000 / 1,000	1,500 / 1,500	2,000 / 2,000	3,000 / 3,000
Input current, max.	10 A	20 A	20 A	30 A
Input connection	IEC C14 inlet	NEMA 5-20P cord	NEMA 5-20P cord	NEMA L5-30P cord
Output current	8.3 A	12.5 A	16.6 A	25 A
Output receptacles	8 × 5-15R	8 × 5-20R	8 × 5-20R	6 × 5-20R + 1 × L5-30R
Internal battery	2 × 12 V 9 Ah	4 × 12 V 9 Ah	4 × 12 V 9 Ah	6 × 12 V 9 Ah
Battery DC voltage	24 V DC	48 V DC	48 V DC	72 V DC
Battery current, max.	50 A	50 A	50 A	50 A
Battery packs	BAT0424RT	BAT0848RT	BAT0848RT	BAT1272RT
Runtime at 50 % · 100 % load	10 · 4.2 min	14.3 · 6 min	10 · 4.2 min	10 · 4.2 min
W × D × H, in	17.3 × 17.3 × 3.4	17.3 × 17.3 × 3.4	17.3 × 17.8 × 3.4	17.3 × 22.8 × 3.4
W × D × H, mm	439 × 439 × 86	439 × 439 × 86	439 × 452 × 86	439 × 579 × 86
Weight	41.8 lb (19 kg)	48.5 lb (22 kg)	51.8 lb (23.5 kg)	61.7 lb (28 kg)

TABLE 10-2 Specifications common to all models

Item	Value
Input voltage · frequency	55–150 V AC (full load from 90 V; 70 % load from 70 V; 40 % load down to 55 V) · 60 Hz ±5 Hz, single-phase
Input power factor	> 0.99 at full load
Output voltage	120 V AC (100 / 110 / 115 V settable)
Output frequency · waveform	60 Hz (50 Hz settable for other markets) · pure sine wave
Transfer time, utility ↔ battery	0 ms
Efficiency, up to	93 %
Modes	online (S) · ECO (E) · bypass · cold start from battery
Charger	1 A standard · 1–8 A with battery packs
Recharge	at least 12 h for a full charge
Communication	RS-232 · intelligent slot (SNMP-M or dry contacts) · EPO · USB optional

Item	Value
Display	LCD, 4 LEDs, 2 keys
Environment	32–104 °F (0–40 °C) · RH < 95 %, non-condensing · 3,300 ft (1,000 m) at full power
Storage	−4 to 158 °F (−20 to 70 °C)
Height	2U, 19-inch
Standards	UL 1778 standard; FCC Part 15, Class A
Warranty	3 years on the UPS · 2 years on VRLA batteries

Specifications are subject to change without notice.

TABLE 10-3 Overload capacity

Load	What the UPS does
Above 100 % on the inverter	OV LOAD lights (code 18). After the time-out the load is moved to bypass (code 19) and returns to the inverter by itself below 95 %.
Above 100 % on bypass	Code 8. If the overload lasts, the output is switched off (code 9).

TABLE 10-4 Output derating with altitude

Altitude	3,280 ft (1,000 m)	4,920 ft (1,500 m)	6,560 ft (2,000 m)	8,200 ft (2,500 m)	9,840 ft (3,000 m)	11,480 ft (3,500 m)	13,120 ft (4,000 m)	14,760 ft (4,500 m)	16,400 ft (5,000 m)
Output power	100 %	95 %	91 %	86 %	82 %	78 %	74 %	70 %	67 %

APPENDIX A

A Ordering codes and accessories

Every FERRUS RT code, the battery packs and the accessories.

TABLE A-1 FERRUS RT ordering codes

Code	Description
FER1000RT-2X9	FERRUS RT 1 kVA online UPS, 2U rack/tower, internal batteries
FER1000RT-2X9+BAT0424RT (x2, x3, x4)	FERRUS RT 1 kVA with 1 to 4 × BAT0424RT battery packs
FER1500RT-4X9	FERRUS RT 1.5 kVA online UPS, 2U rack/tower, internal batteries
FER1500RT-4X9+BAT0848RT (x2, x3, x4)	FERRUS RT 1.5 kVA with 1 to 4 × BAT0848RT battery packs
FER2000RT-4X9	FERRUS RT 2 kVA online UPS, 2U rack/tower, internal batteries
FER2000RT-4X9+BAT0848RT (x2, x3, x4)	FERRUS RT 2 kVA with 1 to 4 × BAT0848RT battery packs
FER3000RT-6X9	FERRUS RT 3 kVA online UPS, 2U rack/tower, internal batteries
FER3000RT-6X9+BAT1272RT (x2, x3, x4)	FERRUS RT 3 kVA with 1 to 4 × BAT1272RT battery packs
BAT0424RT · BAT0848RT · BAT1272RT	Battery pack, 19-inch rack, 24 / 48 / 72 V DC (Table 4-4)
RLKT	Telescopic rail kit, 2/4-post 19-inch rack, max. 100 lb
SNMP-M	SNMP-M network card: web pages, SNMP v1/v2c/v3, Modbus TCP/IP, MQTT
DRYCNT	Dry-contact card: utility failure, battery low, UPS fault, bypass, remote shutdown

TABLE A-2 Weight of the complete systems

Model	+ 1 pack	+ 2 packs	+ 3 packs	+ 4 packs
FERRUS RT 1K + BAT0424RT	77.2 lb (35 kg)	112.6 lb (51.1 kg)	148 lb (67.1 kg)	183.4 lb (83.2 kg)
FERRUS RT 1.5K + BAT0848RT	113.3 lb (51.4 kg)	178.1 lb (80.8 kg)	242.9 lb (110.2 kg)	307.7 lb (139.6 kg)
FERRUS RT 2K + BAT0848RT	116.6 lb (52.9 kg)	181.4 lb (82.3 kg)	246.2 lb (111.7 kg)	311 lb (141.1 kg)
FERRUS RT 3K + BAT1272RT	155.9 lb (70.7 kg)	250.1 lb (113.4 kg)	344.3 lb (156.2 kg)	438.5 lb (198.9 kg)

Each unit ships in its own carton.

APPENDIX B

B Internal battery assembly

How the blocks of the internal battery packs of the UPS are assembled — for battery replacement by qualified personnel.

⚠ WARNING

Battery work must be done by qualified personnel, with the UPS shut down and unplugged (Section 8.5). Connect the blocks exactly as shown; a wrong connection can short the battery.

B.1 FERRUS RT 1K battery pack

1. Remove the adhesive tapes from the two halves of the plastic shell (Figure B-1).
2. Connect all battery terminals with the cables of the pack and place the blocks in the shell (Figure B-2). The 1K pack holds 2 × 12 V 9 Ah blocks in series (24 V DC).
3. Close the other half of the plastic shell and tape it (Figure B-3).

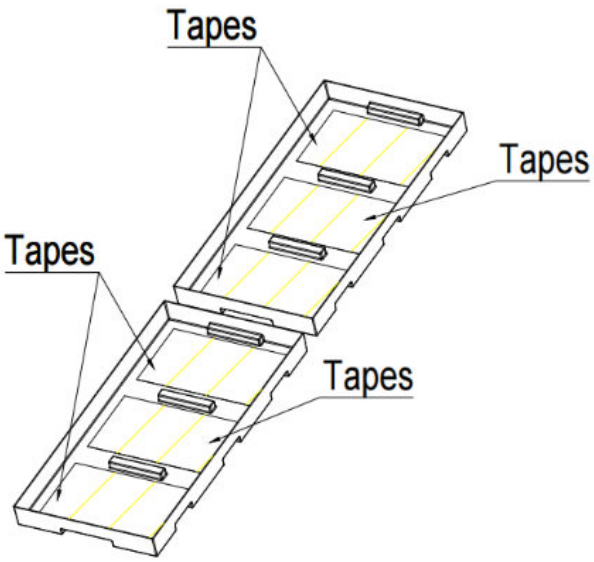

FIGURE B-1 1K pack — remove the tapes

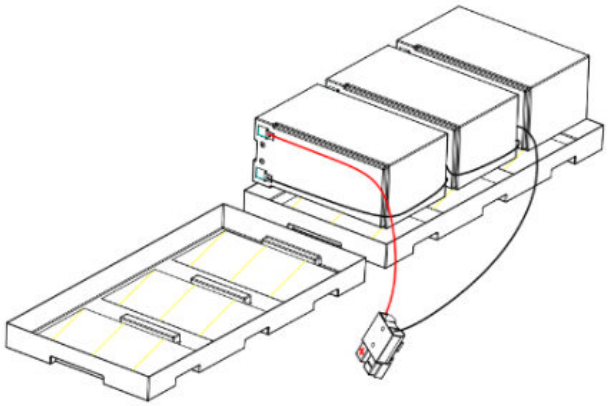

FIGURE B-2 1K pack — blocks connected and placed in the shell

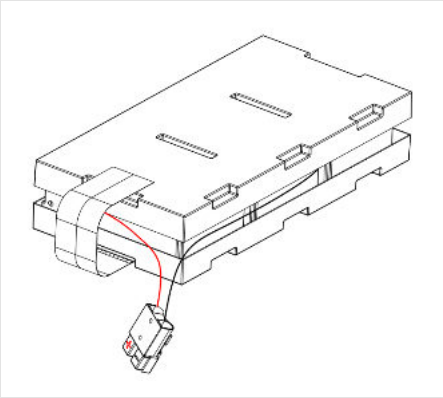

FIGURE B-3 1K pack — shell closed, output plug ready

B.2 FERRUS RT 1.5K, 2K and 3K battery packs

The 1.5K and 2K packs hold 4 × 12 V 9 Ah blocks (48 V DC), the 3K pack 6 blocks (72 V DC). The steps are the same.

1. Remove the tapes of the pack (Figure B-4).
2. Connect the blocks with the cables of the pack, in series (Figure B-5).
3. Place the blocks on one half of the pack and stick them down (Figure B-6).
4. Close the other half of the pack and stick it to the blocks (Figure B-7).

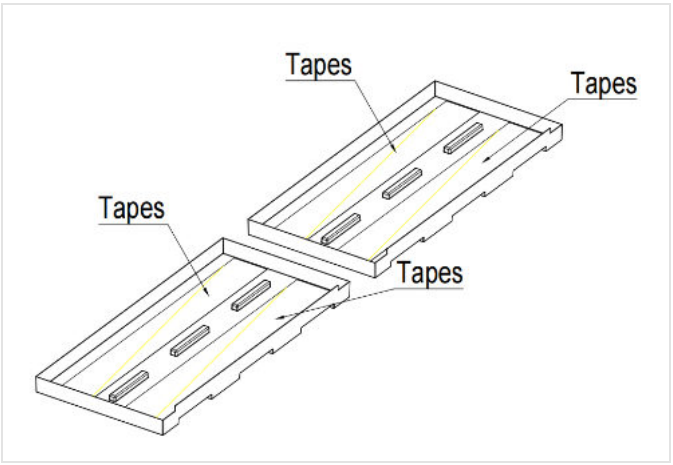

FIGURE B-4 Remove the tapes

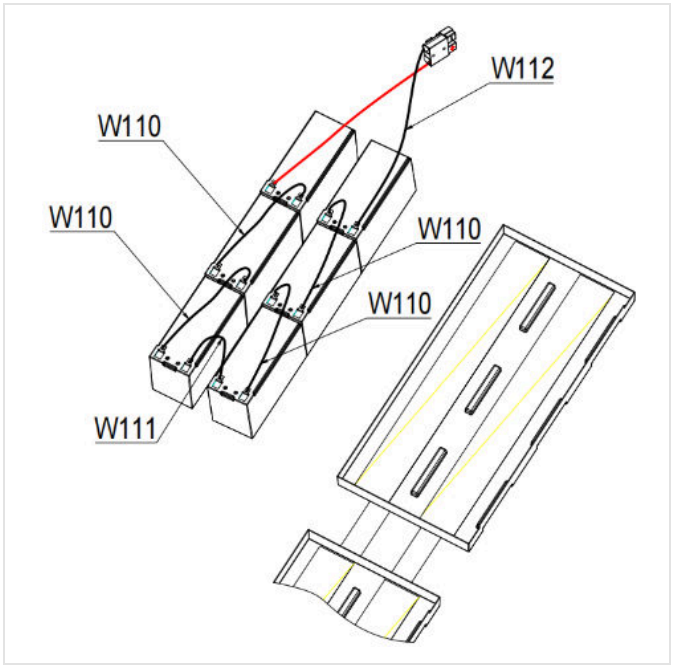

FIGURE B-5 Connect the blocks

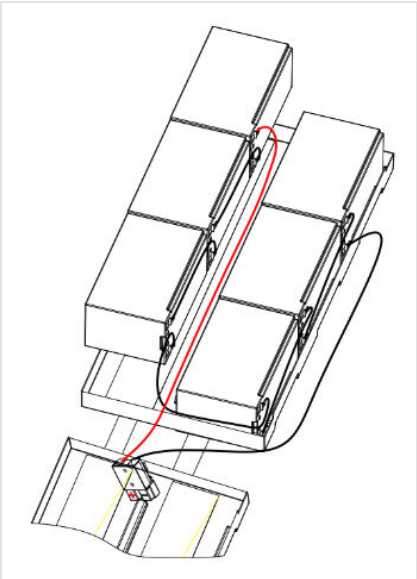

FIGURE B-6 Blocks on the pack

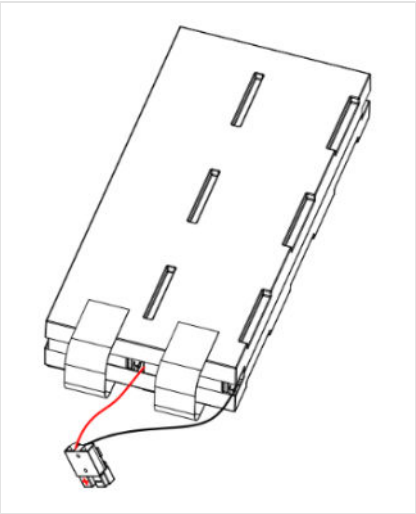

FIGURE B-7 Pack closed — 1.5K and 2K

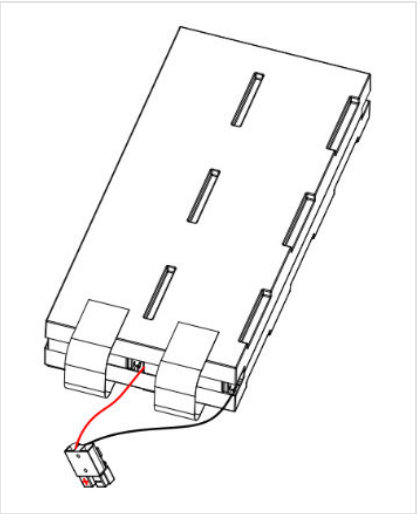

FIGURE B-8 Pack closed — 3K

C

APPENDIX C

Warranty

What the warranty covers.

TABLE C-1 Warranty

Item	Coverage
FERRUS RT UPS	3 years
VRLA batteries, internal and BAT…RT packs	2 years

During the warranty, AEC repairs or replaces a faulty product. Keep the purchase invoice. Not covered: transport damage, incorrect installation or use, use outside the conditions of this manual, repairs by anyone not authorized by AEC, and natural events. The sales contract prevails.

APPENDIX D

D Acronyms and abbreviations

The terms used in this manual.

TABLE D-1 Acronyms and abbreviations

Term	Meaning
AWG	American Wire Gauge
BAT / BYP	Battery / bypass indicator
ECO	Economy (energy-saving) operating mode
EPO	Emergency power off
GFCI	Ground-fault circuit interrupter
INV / REC	Inverter / rectifier indicator
LCD	Liquid-crystal display
NC / NO	Normally closed / normally open (contact)
NEC	National Electrical Code (NFPA 70)
NEMA	National Electrical Manufacturers Association (receptacle and plug types)
PFC	Power-factor correction
RS-232 / RS-485	Serial communication standards
SNMP	Simple Network Management Protocol
UPS	Uninterruptible power supply
VRLA	Valve-regulated lead-acid (battery)

APPENDIX E

Drawings

Overall dimensions of the UPS models and of the battery packs.

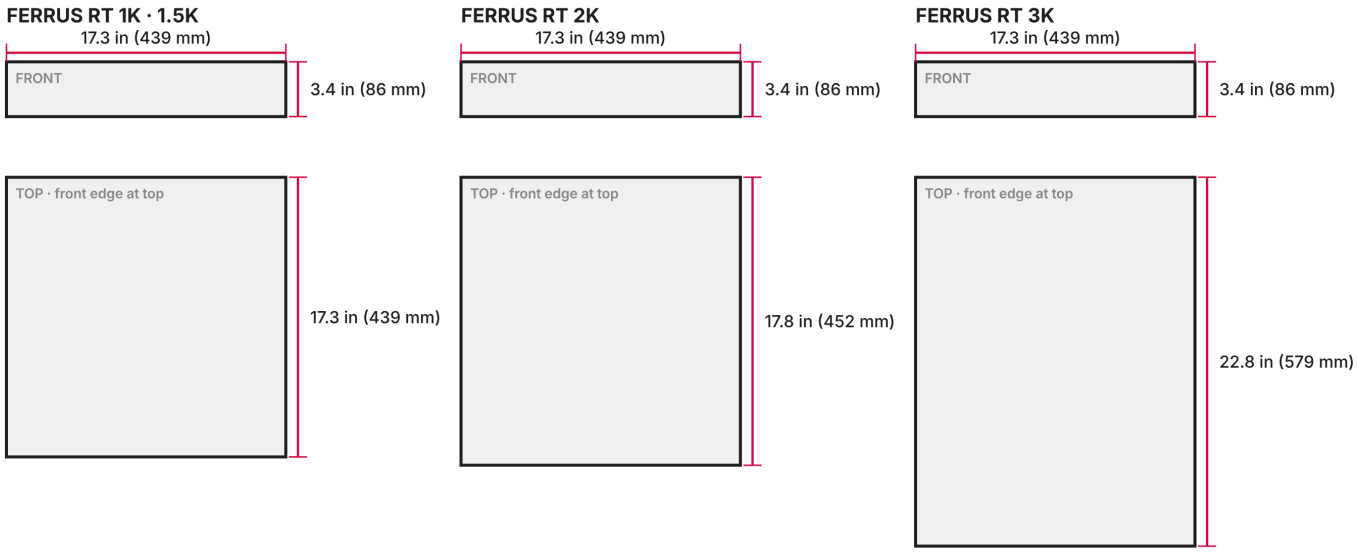

FIGURE E-1 FERRUS RT — overall dimensions (front and top views, not to scale between models)

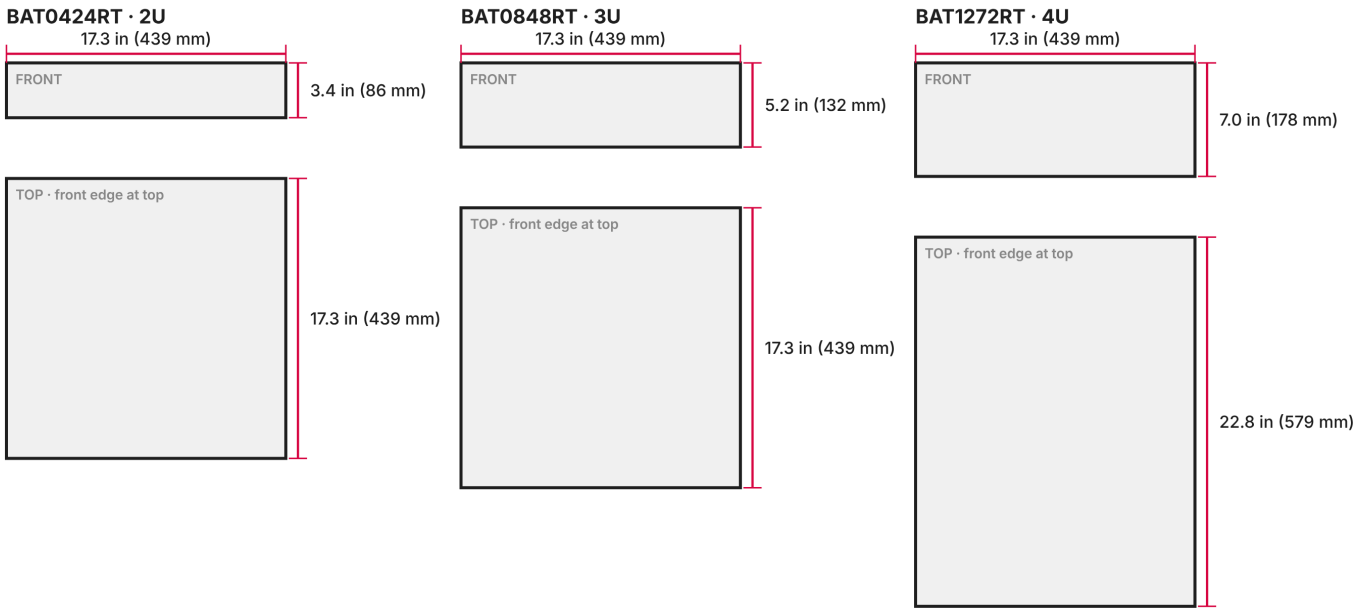

FIGURE E-2 BAT...RT battery packs — overall dimensions (front and top views)

The single-line diagram is in Figure 2-10.

APPENDIX F

Quick reference

The keys at a glance.

TABLE F-1 Quick reference

Task	How
Start on utility power	Switch the supply on: the UPS starts on bypass and goes to normal mode by itself
Start without utility (cold start)	**ON/OFF** once, then hold **ON/OFF** 5 s
Transfer to bypass	Hold **ON/OFF** 2.5 s (normal mode)
Return to the inverter	Press **ON/OFF**
Shut down on battery	Hold **ON/OFF** more than 2.5 s
Next LCD page	**FUNC**
Silence the buzzer	Hold **FUNC** 1.5 s on page 1
Read a fault code	**FUNC**: the code is on page 4
Clear a fault	Hold **FUNC** 1.5 s on page 4
Open / close the settings	Hold **FUNC** + **ON/OFF** 2.5 s
In the settings	**FUNC** chooses · **ON/OFF** confirms · new settings apply after a restart

APPENDIX G

Frequently asked questions

Short answers to common questions.

TABLE G-1 Frequently asked questions

Question	Answer
Should the UPS stay switched on?	Yes. Leave it on all the time: it protects the load and keeps the battery charged.
How long does the battery take to recharge?	At least 12 hours for a full charge after a long discharge.
Is the output a pure sine wave?	Yes. The UPS is online double conversion: the inverter builds a regulated sine wave at all times, on utility and on battery.
What happens when the battery runs out?	The UPS switches its output off at the end of discharge, then restarts by itself when the utility returns and recharges the battery.
Can I add batteries later?	Yes: up to four BAT...RT battery packs of the same DC voltage as the UPS (Table 4-4). Set the battery capacity and the charge current in the settings.
What is ECO mode, and should I use it?	In ECO mode the load runs on the bypass while the utility is good: efficiency is higher, but the load is not protected from utility disturbances. Use normal online mode for sensitive equipment.
Can I plug a power strip into the UPS?	Only a plain power strip within the rating of the receptacle. Do not connect surge-protector strips, and never connect a UPS to the output of another UPS.
Which equipment should not be connected?	Laser printers, space heaters, vacuum cleaners, hair dryers and other loads with high start-up current or half-wave rectifiers.
Can I use the UPS with a generator?	Yes — see Section 3.3.
Can I use it upright?	Yes. Stand it on its two stands with the operation panel at the top (Section 4.4).
Can I move the UPS while it runs?	No. Shut it down and disconnect it first.

APPENDIX H

H Installation record

Fill this record in at installation and keep it with the UPS. It is the first thing AEC service will ask for.

TABLE H-1 Installation record

Item	Value
Model and ordering code	
Serial number	
Installation date	
Installed by (company, name)	
Site and room; rack or tower	
Input branch circuit (breaker rating, receptacle type, conductor size)	
Battery set-up (internal only, or number of BAT…RT packs)	
Battery capacity set (Ah) and charge current	
Output voltage set (120 V)	
System mode (S normal, E ECO)	
Communication (RS-232 ID, SNMP-M address, menu 234 values)	
Load at start-up (%)	
Battery check after the first 12-hour charge	

Service and support

AEC technical support is available 24 hours a day, 7 days a week. For help with installation, start-up, alarms, settings, spare parts, warranty claims and service visits, contact us by WhatsApp, phone or e-mail.

TECHNICAL SUPPORT · 24/7	**+1 786 553 2100**	WhatsApp and phone — always available
SERVICE E-MAIL	**service.us@aecups.com**	Technical questions, service requests, warranty claims
SALES	**sales@aecups.com**	
ADDRESS	**AEC UPS USA LLC**	4872 SW 72nd Ave, Miami, FL 33155
WEB	**aecups.com**	

When you contact us, have ready: the model and ordering code, the serial number (on the rating label at the rear of the UPS), the code shown on LCD page 4, the load and the battery set-up — a photo of the display and of the label speeds things up on WhatsApp.