AEC

SPLIT-PHASE ONLINE UPS · 120/240 V

FERRUS SP 20 kVA

Quick Installation Guide

From delivery to normal operation, for the three 20 kVA models: 40X9, EMPTY and EXT. Qualified electricians only. Read every safety message.

FERSP20000-40X9 · FERSP20000-EMPTY · FERSP20000-EXT

AEC-QG-FS20-US · REV. A · NOVEMBER 2026

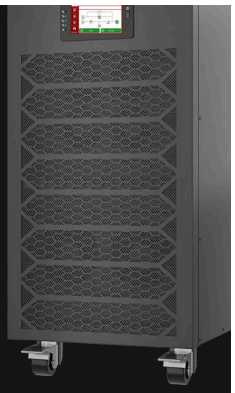

1 Safety first

Read these messages before you start. Keep this guide and the user manual near the UPS.

⚠ DANGER

Hazardous voltage. The 40X9 carries 40 batteries inside (240 V DC); the EMPTY has them once they are fitted; the EXT is connected to an external battery cabinet. The battery circuit is not isolated from the utility input, and with the input breaker open the internal circuits stay connected to the battery. Open the battery breakers BAT1 · BAT2 (EXT: the battery cabinet breaker) before you open any cover, and check that there is no voltage between the battery terminals and ground before you touch them.

⚠ WARNING

Qualified electricians only. The UPS is hardwired. Install it to the National Electrical Code (NFPA 70) and local codes. Switch off and lock out the utility supply before wiring. Do not feed the UPS from a wall receptacle.

⚠ WARNING

Batteries. Wear rubber gloves and rubber-soled boots, remove rings and watches, and use tools with insulated handles only. Do not lay tools on the batteries. Reversed battery polarity damages the UPS: always check it with a voltmeter.

⚠ WARNING

The UPS is heavy: 452 lb (205 kg) for the 40X9, 218.3 lb (99 kg) for the EMPTY, 209.4 lb (95 kg) for the EXT. Move it on its casters on a flat floor only, with two or more people. Do not tilt it more than 10°.

2 Check the delivery and the site

Check which of the three models you have — they differ in cabinet, input breaker, battery and terminal height.

In the box: 1 × FERRUS SP 20 kVA UPS (40X9 with its 40 internal batteries; EMPTY with the battery compartment empty; EXT with no battery compartment) · 1 × user manual · accessory kit (check it against the packing list).

1. Check the model code on the rating label: **40X9**, **EMPTY** or **EXT**. Table 2-1 shows where they differ.
2. Inspect the unit for transport damage. If anything is damaged or missing, do not switch it on: notify the carrier and your AEC dealer.
3. If the UPS was unpacked in a cold place, wait until it is completely dry inside and out. Condensation can cause electric shock.
4. Check the site: indoors, ventilated, on a level floor rated for the weight; 32–104 °F (0–40 °C), below 95 % humidity non-condensing, full power up to 3,300 ft (1,000 m); at least 20 in (500 mm) free on all four sides; NEC 110.26 working space in front of the rear panel.

TABLE 2-1 Where the three models differ

Item	40X9 · EMPTY (drawings AEC-FSP-20B)	EXT (drawings AEC-FSP-20E)
Battery	40X9: 40 × 12 V 9 Ah inside, 2 strings of 20, 240 V DC · EMPTY: same compartment, supplied empty	No battery inside: external cabinet, 240 V DC, on BAT+ · BAT−
Battery breakers	**BAT1 · BAT2** on the rear panel, one per string	None on the UPS: the breaker is in the external cabinet
Input breaker	**3-pole 125 A: Byp-L1 · Mains-L1 · I/P-L2**	**2-pole 125 A: L1 · L2**
Terminal center line above the floor	**26.9 in (684 mm)**	**15.5 in (393 mm)**
Body W × D × H	15.8 × 28.7 × 38.7 in (401 × 729 × 983 mm)	13.8 × 22.7 × 27.8 in (351 × 575 × 707 mm)
Weight	40X9 452 lb (205 kg) · EMPTY 218.3 lb (99 kg)	209.4 lb (95 kg)
Floor area with clearances	55.2 × 68.1 in (1,401 × 1,729 mm)	53.2 × 62.0 in (1,351 × 1,575 mm)
Floor anchors	4 brackets, 17.3 in (440 mm) apart	4 brackets, 15.0 in (380 mm) apart
Cooling	Front to rear; transformer fans exhaust at the rear	Front to rear; transformer fans behind the front grille

3 Place the tower

Roll it in, lock it, anchor it if required.

1. Roll the tower into place on its casters.
2. Leave at least 20 in (500 mm) free on all four sides (Figure 3-1). Keep the front grille and the rear vents clear. Do not put the rear against a wall, or the exhaust into another unit's intake.
3. Lock the caster brakes.
4. For a fixed or seismic installation, anchor the four brackets to the floor with M8 anchors (by the installer); slots 10 × 17 mm.
5. EXT: place the external battery cabinet next to the UPS, within reach of the battery cables.

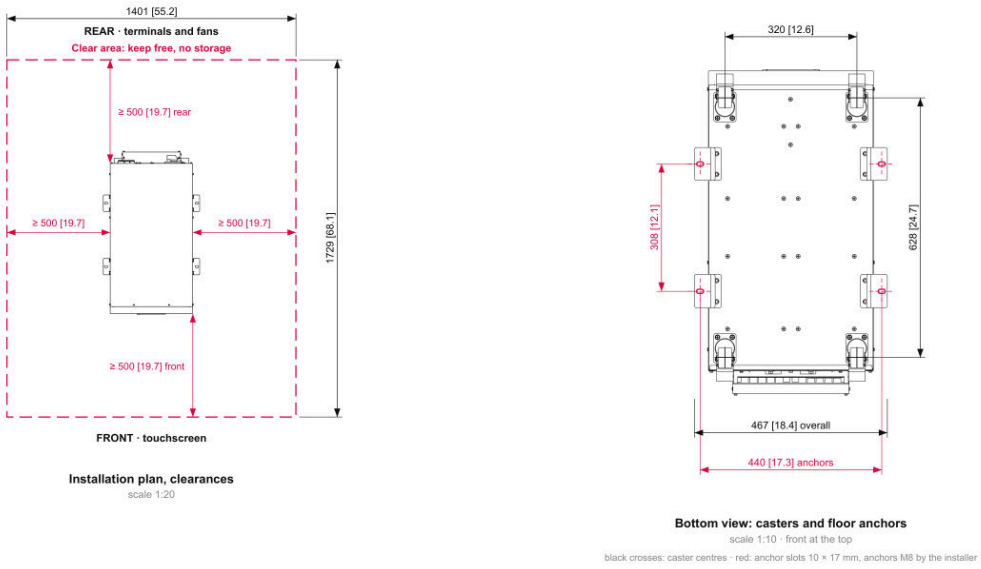

FIGURE 3-1 Clearances and floor anchors, 40X9 and EMPTY, mm [in] (AEC drawing AEC-FSP-20B-06). The EXT: anchors 380 [15.0], floor area 1351 × 1575 [53.2 × 62.0]

4 Wire the power

Ground first, then the input, the output with its jumpers, the battery last. The two terminal strips are the same on the three models; only their height differs.

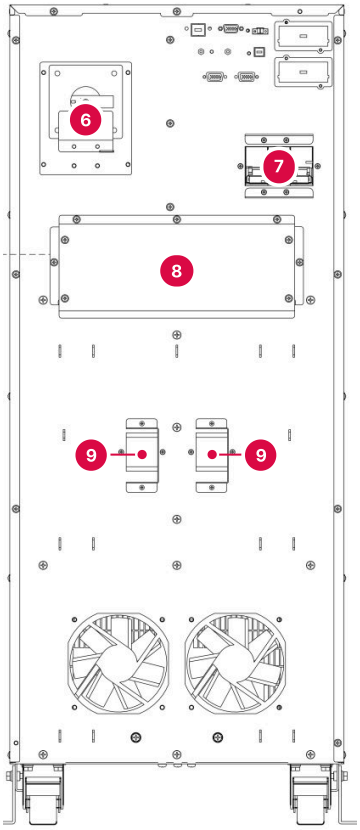

6 Maintenance bypass switch UPS / BYPASS

7 Input breaker, 3-pole 125 A: Byp-L1 · Mains-L1 · I/P-L2

8 Terminal cover; strips behind it, center line 26.9 in (684 mm) above the floor

9 Battery breakers BAT1 · BAT2

FIGURE 4-1 Rear panel, 40X9 and EMPTY (AEC-FSP-20B-04)

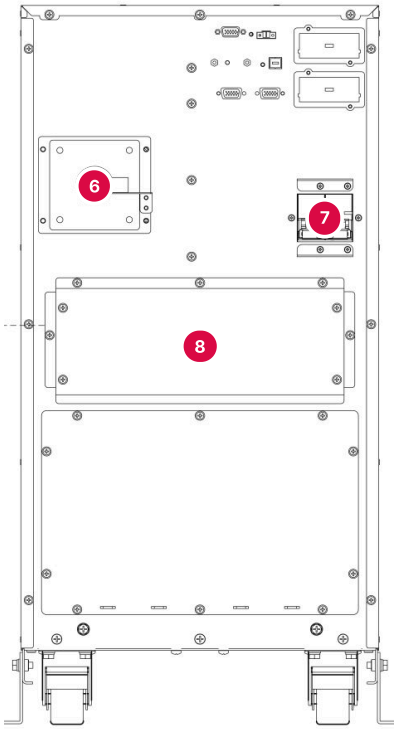

6 Maintenance bypass switch UPS / BYPASS

7 Input breaker, 2-pole 125 A: L1 · L2

8 Terminal cover; strips behind it, center line 15.5 in (393 mm) above the floor

FIGURE 4-2 Rear panel, EXT (AEC-FSP-20E-04)

Where the terminals are. Behind the terminal cover (8) are **two strips, seen from the rear: strip 1 OUTPUT — O/P-L1 · O/P-N1 · O/P-L2 · O/P-N2 · PE; strip 2 — I/P-L1 · I/P-L2 · PE · BAT+ · BAT−.** Strips 5.3 in (134 mm) long, 2.2 in (56 mm) apart, 8.8 in (224 mm) first to last terminal, terminals 1.4 in (35 mm) high. **Center line 26.9 in (684 mm) above the floor on the 40X9 and EMPTY, 15.5 in (393 mm) on the EXT** (casters included). Cables enter from below through the cover. The terminals as they look on the unit: Figure 4-4.

Size the input circuit. The input is the two line conductors of the 120/240 V or 120/208 V service (I/P-L1, I/P-L2, 240 V or 208 V between them) and the equipment grounding conductor — **no input neutral**. The output neutrals O/P-N1 and O/P-N2 come from the isolation transformer. Input breaker at or above both the maximum input current and 125 % of the rated input current at 240 V (NEC 215.2, 215.3, 240.6); conductor ampacity at 75 °C for the terminations (NEC 110.14(C)). On a 208 V supply the rated input current is about 103 A, and 125 % of it (129 A) is above the 125 A of Table 4-2: ask AEC for the breaker and conductor before you install.

TABLE 4-1 Currents and factory cable sizes (all three models)

Item	Value	Factory cable size
Input current, max.	125 A — recommended branch breaker 125 A, 2-pole (Table 4-2)	4 AWG (25 mm²), I/P-L1 · I/P-L2
Output current per 120 V leg	84 A	4 AWG (25 mm²), O/P-L1 · O/P-N1 · O/P-L2 · O/P-N2
Battery current, max.	110 A	3 AWG (35 mm²), BAT+ · BAT−
PE (grounding)	—	As the largest phase conductor

TABLE 4-2 Recommended overcurrent protection and copper conductors

Circuit	Sizing current	Recommended breaker (NEC 240.6)	Copper conductor, 75 °C (NEC 310.16)
Input L1, L2 (2-pole)	125 A max.; 125 % × 89.6 A rated = 112 A	125 A	1 AWG
Output leg, max. 84 A (configurations 01, 03, 04)	105 A	110 A	2 AWG
Battery cable, max. 110 A	137.5 A	—	1/0 AWG

The example assumes copper THHN/THWN conductors at 75 °C, no more than three current-carrying conductors in the raceway and an ambient of 86 °F (30 °C). These sizes are larger than the factory sizes: check with AEC that lugs for them fit the M6 studs at the 0.83 in (21 mm) pitch before you plan the cables.

The installer's calculation prevails over the factory sizes; NEC sizes can be larger. The terminals are **M6 studs for ring lugs**: choose lugs that fit the stud and the 0.83 in (21 mm) pitch. Install an output circuit breaker between the UPS and the loads (the 20 kVA has no receptacles).

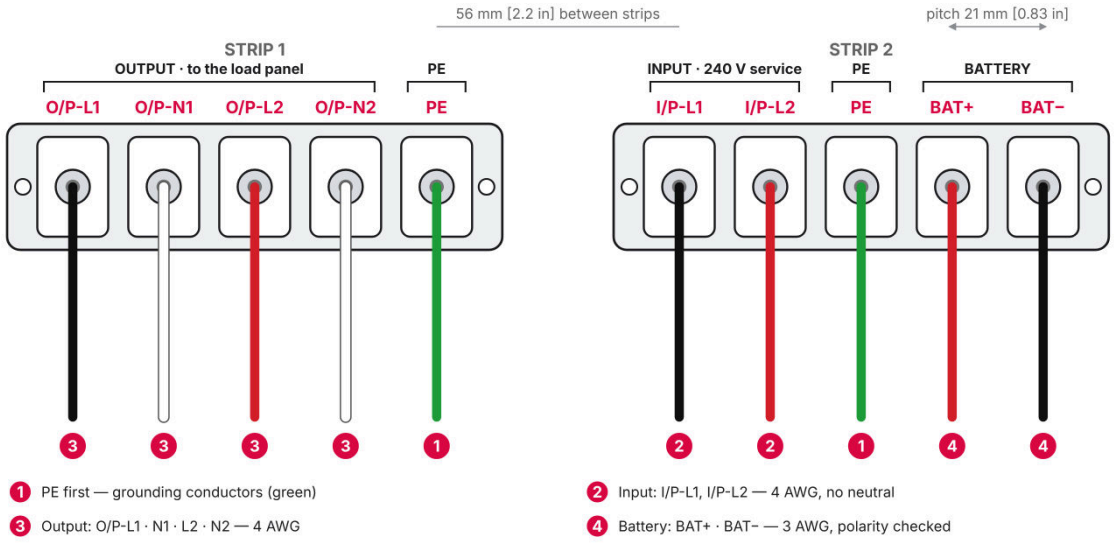

FIGURE 4-3 The two terminal strips, seen from the rear, with the order of connection (US wire colors shown as an example)

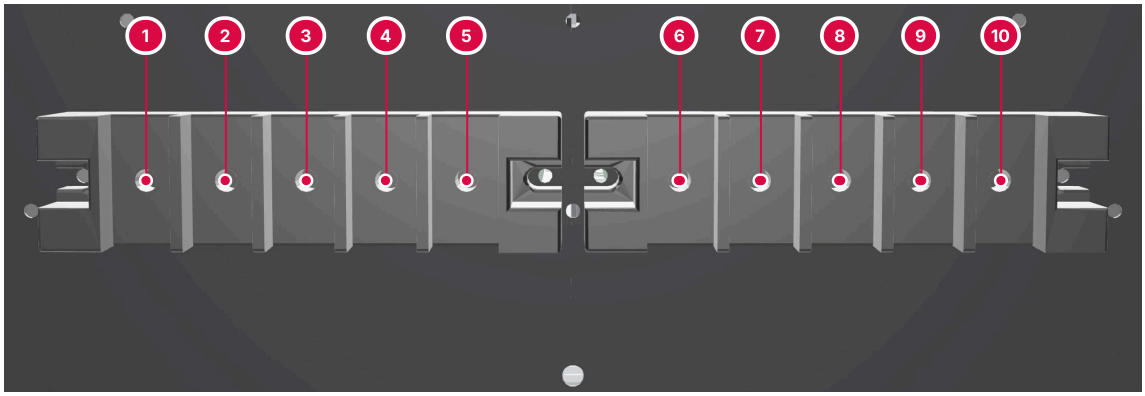

1	O/P-L1	6	I/P-L1
2	O/P-N1	7	I/P-L2
3	O/P-L2	8	PE, strip 2
4	O/P-N2	9	BAT+
5	PE, strip 1	10	BAT–

FIGURE 4-4 The same strips on the unit, cover removed (rendering from the factory 3D model)

1. Check that the input breaker (7 in Figure 4-1 or Figure 4-2) is open, BAT1 · BAT2 are open (EXT: the cabinet breaker), and the utility supply is locked out.
2. Remove the terminal cover (8). Bring the cables in from below, through the cover.
3. **Ground first** (1 in Figure 4-3): the grounding conductor of the supply to PE on strip 2, the load grounding conductors to PE on strip 1, before any other wire.
4. **Input** (2, strip 2): the two line conductors of the service to I/P-L1 and I/P-L2. No neutral.
5. **Output** (3, strip 1): choose the output configuration in Table 4-3, fit its jumpers (same cross-section as the output conductors) and connect O/P-L1, O/P-N1, O/P-L2 and O/P-N2 for it (Figure 4-5).
6. **Battery** (4, strip 2): external cabinet only — BAT+ and BAT–, as in **Connect the battery**.
7. Tighten every terminal to the torque on the terminal label. Strain-relieve every cable; keep communication cables (RS232, USB, EPO, parallel) away from power cables.
8. Check every connection and refit the terminal cover.

Choose the output configuration. The isolation transformer has two 120 V windings, O/P-L1–O/P-N1 and O/P-L2–O/P-N2; jumpers on the output strip set the output. In a parallel system every unit uses the same configuration. Keep each 120 V leg within 84 A.

TABLE 4-3 Output configurations

No.	Output	Jumpers	Loads
01	Two separate 120 V	none	Load 1 on O/P-L1–O/P-N1, load 2 on O/P-L2–O/P-N2: half the rating each. Balance the two groups.
02	One 120 V	O/P-L1–O/P-L2 and O/P-N1–O/P-N2	One load on O/P-L1–O/P-N1: the full rating at 120 V.
03	One 240 V	O/P-N1–O/P-L2	One load across O/P-L1–O/P-N2: the full rating at 240 V; no neutral needed by the load.
04	120 V and 240 V together	O/P-N1–O/P-L2	120 V on O/P-L1–O/P-N1 and O/P-L2–O/P-N2, 240 V on O/P-L1–O/P-N2. Split-phase 3-wire loads: O/P-L1, O/P-N1 (= O/P-L2) as the neutral, and O/P-N2.

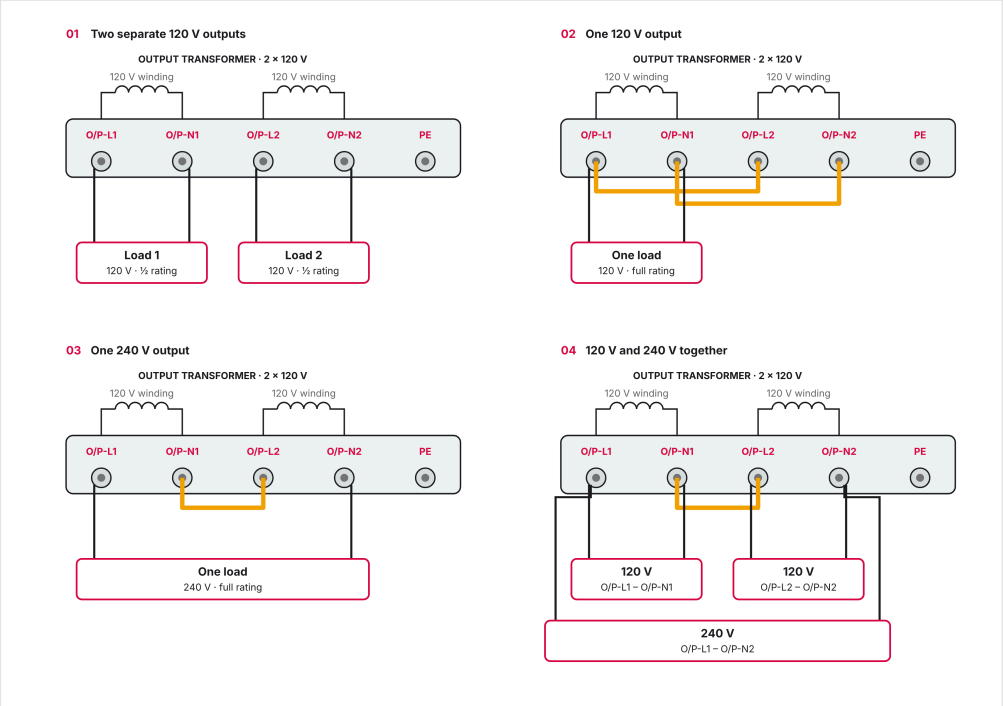

FIGURE 4-5 Output configurations 01 to 04 on the output strip — jumpers in orange

5 Connect the battery

Different on each model: the 40X9 is ready, the EMPTY is fitted on site, the EXT needs an external cabinet.

- **40X9:** the 40 batteries are fitted and wired at the factory, in two strings of 20 with breakers BAT1 · BAT2 (Figure 5-1). Keep BAT1 · BAT2 open until the first start.
- **EMPTY:** fit the batteries before the first start (below).
- **EXT:** connect an external battery cabinet, 240 V DC, with its own DC breaker (below). The 40X9 and the EMPTY can also take a long-backup cabinet on BAT+ · BAT−, in parallel with the internal strings.

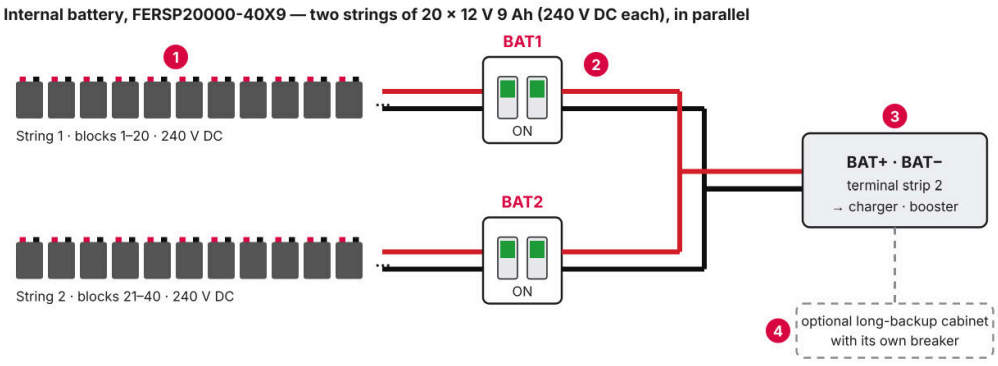

1. Two strings of 20 × 12 V 9 Ah, 240 V DC each
2. Battery breakers BAT1 · BAT2, rear panel (9)
3. BAT+ · BAT− on terminal strip 2
4. Optional long-backup cabinet, with its own breaker

FIGURE 5-1 Internal battery strings and breakers, 40X9 (also EMPTY once fitted)

Fitting batteries in the EMPTY (qualified personnel; 40 blocks of one type, age and capacity: 12 V 9 Ah VRLA)

1. Keep BAT1 and BAT2 open and the UPS off.

2. Remove both side covers and the metal retaining bars.
3. Fit the blocks on the shelves, 20 per string.
4. Connect the block-to-block links one at a time, then the string cables. Take care when you connect the last cable of each string.
5. Measure each string with a voltmeter: 20 blocks in series, 240 V DC nominal, positive on the positive cable.
6. Refit the retaining bars and the side covers.

Connecting an external battery cabinet (EXT; optional on the 40X9 and EMPTY)

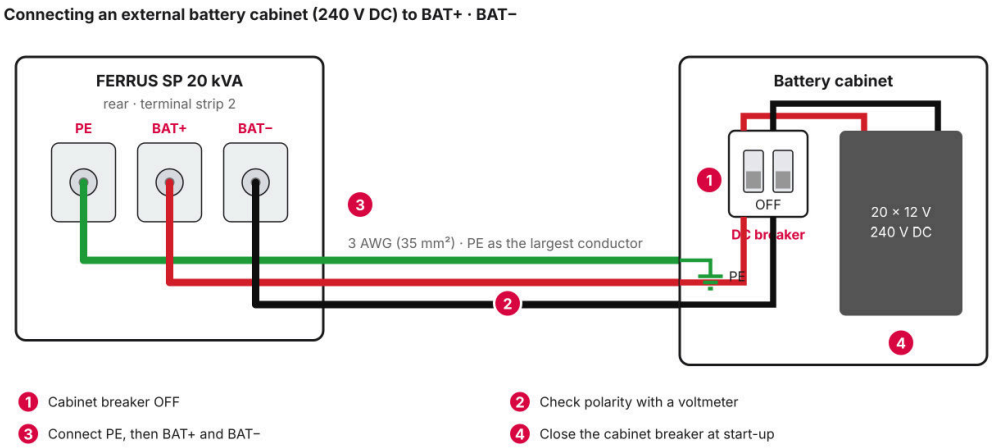

FIGURE 5-2 External battery cabinet on BAT+ · BAT– (all models)

1. Open the battery cabinet breaker (1 in Figure 5-2). Open BAT1 · BAT2 on the 40X9 and EMPTY.
2. Check the polarity of the cabinet cable with a voltmeter (2).
3. Connect PE between the cabinet and the PE terminal of strip 2, then BAT+ to BAT+ and BAT– to BAT– (3). Cable 3 AWG (35 mm²).
4. Leave the cabinet breaker open; close it at start-up (4).

> ⚠ ***WARNING***
>
> Reversed battery polarity damages the UPS. The cabinet battery is 240 V DC: 20 blocks of 12 V in series per string.

6 Start the UPS

Battery breakers first, then the input breaker; line (normal) mode in about one minute.

Before you start: the wiring is complete and the terminal cover refitted, the loads are switched off, the output breaker is installed, and the communication, EPO and parallel cables (if used) are connected.

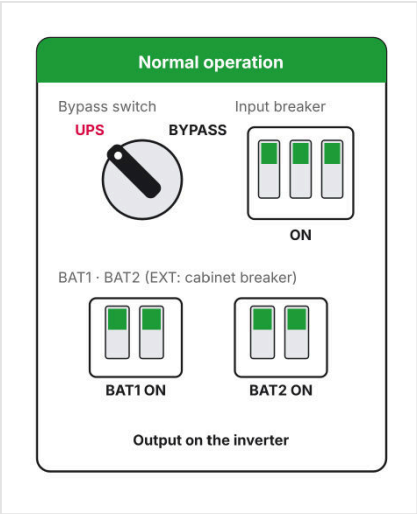

FIGURE 6-1 Normal operation

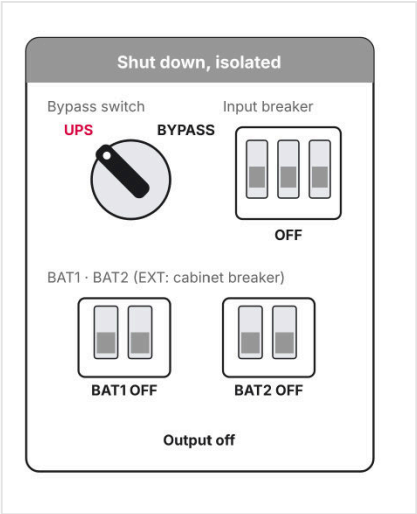

FIGURE 6-2 Shut down, isolated

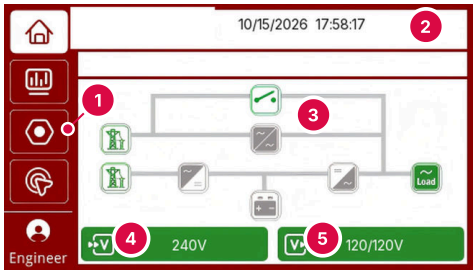

1. Side menu: Home, Data, Set, Control
2. Status bar: message, mute, date and time
3. Power flow: green active, grey not active
4. Input voltage (L1–L2)
5. Output voltage of the two legs

FIGURE 6-3 Home page

1. Check that the maintenance bypass switch (6 in Figure 4-1 or Figure 4-2) is on **UPS**.
2. Close the battery breakers **BAT1** and **BAT2** (9) — on the EXT, the external cabinet breaker (Figure 6-1). EMPTY with batteries just fitted: the user manual asks you to enter the battery set-up (**Set › BATT Set**) before you close BAT1 and BAT2 — close the input breaker first, set the battery, then close BAT1 · BAT2.
3. Close the input breaker (7). The fans start and the touchscreen lights.
4. Wait. The rectifier starts; after about one minute the UPS goes to line (normal) mode and **INV** lights.
5. Check the home page (Figure 6-3): power flow from the utility through rectifier and inverter to the load, no alarm.

7 Set and check

The few settings needed at the first start, the checks for normal mode, then the loads.

> ⚠ ***CAUTION***
>
> Only qualified personnel, logged in as **Engineer**, may change the settings. The number of blocks set must equal the number installed in each string, or the batteries and the UPS can be damaged.

1. **Battery: Set › BATT Set** — the battery type, the number of blocks in series (20 per string: 40X9, EMPTY with its 40 blocks, 240 V DC cabinet), the capacity in Ah and the charge current. The standard charge current is 1 A; with an external long-backup cabinet it can be set from 1 to 8 A — keep the battery capacity above 24 Ah so that the charge current is not too high for the battery.
2. **Date and time: Set › Sys Func**.
3. **Output:** the output is 120/240 V, 60 Hz. The rated leg voltage (110, 115, 120 or 127 V, **Set › Rate Set**) and the system mode (single, parallel or ECO) are on Set, page 2 — engineer level, at commissioning.
4. **Check normal mode:** only **INV** lit; **Data › Current Alarm** empty; **Data › Output** shows the voltage of both legs.
5. **Switch on the loads** one at a time, the largest first. Then check **Data › Load**: each 120 V leg within 84 A.
6. **Charge for at least 12 hours** before you rely on the full runtime (40X9: 3 min at full load, 10 min at half load; EMPTY the same with 40 blocks fitted; EXT: depends on the cabinet).

i NOTE Re-check the tightness of the terminals after 24 hours of operation. Write the model, input breaker, conductor size, output configuration and battery set-up in the installation record of the user manual.

8 Shut down and maintenance bypass

The maintenance bypass switch UPS / BYPASS is standard on all three models; the input breaker is handled differently.

Shut down (normal mode)

1. Switch off the loads.
2. Switch the inverter off: **Control › Function › ON/OFF Control**. The UPS transfers to bypass.
3. Open the input breaker, then the battery breakers BAT1 · BAT2 (EXT: the cabinet breaker), to switch the UPS off completely (Figure 6-2).

To maintenance bypass — keeps the load on the utility while the UPS is serviced.

1. Transfer the UPS to bypass: **Control › Function › Manual Bypass**. Check that BYP lights.
2. Open the battery breakers BAT1 · BAT2 (EXT: the cabinet breaker).
3. Turn the maintenance bypass switch (6) from UPS to **BYPASS**. Alarm 39 "Maintenance breaker closed" shows; the inverter cannot start.
4. **EXT:** open the input breaker. **40X9 and EMPTY:** keep the input breaker closed — the maintenance bypass line is drawn after its Byp-L1 pole — and call AEC service (+1 786 553 2100) before any work inside the UPS.

Back to the UPS

1. Close the input breaker if it was opened, and close the battery breakers. Wait until the UPS runs on its static bypass (BYP lit).
2. Turn the maintenance bypass switch from BYPASS to **UPS**. Alarm 39 clears.
3. Return to the inverter: **Control › Function › Manual Transfer to Inverter**. INV lights.

> ***WARNING***
>
> In maintenance bypass the output terminals stay live, and so do the input terminals and parts of the UPS. The load is not protected from utility disturbances. Only qualified personnel may service the UPS.

AEC technical support · 24/7
+1 786 553 2100 — WhatsApp and phone

service.us@aecups.com
sales@aecups.com

AEC UPS USA LLC
4872 SW 72nd Ave, Miami, FL 33155 · aecups.com

Settings, alarms, maintenance and every detail: **FERRUS SP 20 kVA User Manual, AEC-UM-FS20-US** (aecups.com · AEC app › Support › Downloads).