ONLINE UPS · SPLIT PHASE 120/240 V · TOWER

FERRUS SP

20 kVA

Online double-conversion UPS with output isolation transformer, 120/240 V split-phase output and the AEC color touchscreen — with 40 batteries inside, an empty battery compartment, or for an external battery cabinet.

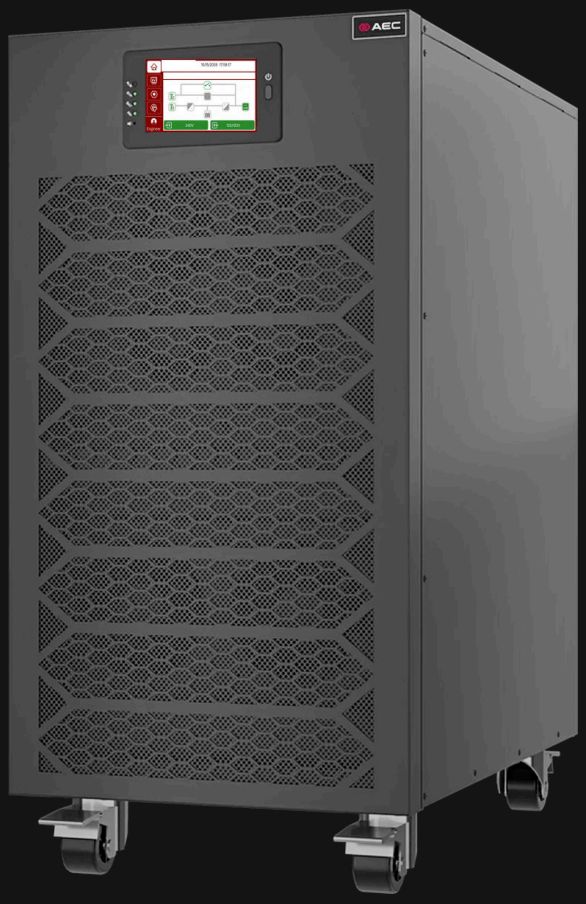

User Manual

Installation · Operation · Maintenance

FERSP20000-40X9 | FERSP20000-EMPTY | FERSP20000-EXT

COPYRIGHT AND NOTICES

Copyright © 2026 AEC UPS USA LLC. All rights reserved. No part of this document may be reproduced or transmitted in any form or by any means without the prior written consent of AEC UPS USA LLC.

Trademarks. AEC and FERRUS SP are trademarks of AEC UPS USA LLC. All other trademarks and trade names mentioned in this document are the property of their respective owners.

Notice. The products, services and features you purchase are defined by the contract between AEC and the customer; some of those described in this document may not be included in your purchase or use. Unless the contract says otherwise, all statements, information and recommendations in this document are provided “as is”, without warranties, guarantees or representations of any kind, express or implied. The information in this document may change without notice. Every effort has been made to ensure its accuracy, but nothing in it constitutes a warranty of any kind, express or implied. The illustrations are for reference: the actual product may differ slightly.

AEC UPS USA LLC
4872 SW 72nd Ave, Miami, FL 33155
Technical support, 24/7 · phone and WhatsApp: **+1 786 553 2100**
service.us@aecups.com · sales@aecups.com · aecups.com

AEC-UM-FS20-US · Rev. C · November 2026. Rev. C takes dimensions, rear panels, terminals and battery data from the AEC drawings AEC-FSP-20B and AEC-FSP-20E, gives the EMPTY model its real cabinet, adds the FERSP20000-EXT model, makes the maintenance bypass standard, removes RS485 and every 15 kVA leftover, and adds labeled pictures of every panel, terminal strip and procedure.

BEFORE YOU START

About this manual

Thank you for choosing an AEC FERRUS SP 20 kVA UPS. This manual describes the three 20 kVA models — their panels and terminals, the touchscreen, planning, installation, the output configurations, the batteries, operation, communication, maintenance, troubleshooting and specifications. Dimensions, rear panels and terminals are taken from the AEC drawings of each cabinet. Read it before you start, and keep it near the UPS.

MODELS COVERED

FERSP20000-40X9 (40 × 12 V 9 Ah batteries inside), FERSP20000-EMPTY (the same cabinet, battery compartment supplied empty) and FERSP20000-EXT (a smaller cabinet for an external battery cabinet). Ordering codes: Table 2-2. The FERRUS SP 6–10 kVA and the FERRUS SP RT 6–10 kVA have their own manuals.

WHO THIS MANUAL IS FOR

Qualified electricians and trained personnel who install, operate and maintain the UPS. The UPS is hardwired: the input, output and battery wiring must be installed by qualified personnel to the National Electrical Code (NFPA 70) and local codes.

Safety messages

Safety messages in this manual follow ANSI Z535.6. The signal word tells how serious the hazard is:

DANGER	A hazardous situation which, if not avoided, **will** result in death or serious injury.
WARNING	A hazardous situation which, if not avoided, **could** result in death or serious injury.
CAUTION	A hazardous situation which, if not avoided, could result in minor or moderate injury.
NOTICE	Information about practices that could damage the equipment, lose data, reduce performance or give unexpected results — not related to injury.

Other conventions

i NOTE Additional information that stresses or completes the text.

✓ TIP A hint that helps you solve a problem or save time.

Keys are shown like [ON]; menus like **Settings › Battery**. Numbers in red circles on a picture are explained in the list under it. Cross-references in red are links in the PDF.

QUICK START

Up and running in six steps

The short version — each step points to the full instructions. Read the safety chapter first.

1. **Unpack and inspect.** Check the model code on the label: 40X9, EMPTY or EXT. Section 4.1, page 26.
2. **Place the UPS** on a level floor with 20 in (500 mm) free on all four sides; lock the casters. Section 4.4, page 29.
3. **Wire — qualified electrician.** PE first, then input I/P-L1 · I/P-L2 (no neutral), output and battery on the two terminal strips behind the rear cover. Install an output breaker. Section 4.5, page 29.
4. **Set the output** for 120 V, 240 V or both with the jumpers on the output strip. Section 4.7, page 34.
5. **Start.** Close the battery breakers BAT1 · BAT2 (EXT: the cabinet breaker), then the input breaker: line mode after about one minute, only INV lit. Section 6.3, page 42.
6. **Check and load.** Battery set-up in Set › BATT Set, then switch the loads on one at a time, the largest first. Section 7.4, page 47.

120/240 V
split-phase output from an isolation transformer

20 kVA / 20 kW
output power factor 1

3 models
40 batteries inside · empty compartment · external cabinet

Up to 3
units in parallel, N+1

CONTENTS

Contents

1 Safety 8
1.1 Battery safety 8
1.2 General safety 8
1.3 Handling and transport 9
1.4 Installation and EMC 9
1.5 Standards 9

2 Product description 10
2.1 Introduction 10
2.2 Models and ordering codes 11
2.3 What is in the box 11
2.4 Front panel 11
2.5 Rear panel — 40X9 and EMPTY 13
2.6 Rear panel — EXT 16
2.7 Communication ports 18
2.8 Inside the cabinet 18
2.9 Touchscreen at a glance 21
2.10 The isolation transformer 21
2.11 How the UPS works 22
2.12 Operating modes 23
2.13 Protections 23

3 Planning the installation 24
3.1 Sizing the load 24
3.2 Choosing the model 24
3.3 Estimating the runtime 24
3.4 Choosing the output configuration 25
3.5 Running on a generator 25

4 Installation 26
4.1 Unpacking and inspection 26
4.2 Site and environment 26
4.3 Dimensions and clearances 26
4.4 Placing the tower 29
4.5 Electrical connection 29
4.6 Terminal strips 30
4.7 Output configurations 34
4.8 Batteries 35
4.9 Parallel systems 35
4.10 Communication connections 35
4.11 Installation checklist 36

5 Batteries and runtime 37
5.1 Internal battery of the 40X9 37
5.2 Fitting batteries in the EMPTY model 38
5.3 Connecting an external battery cabinet 39
5.4 Battery settings 39
5.5 Runtime 40

6 Operation 41

6.1 Before the first start 41
6.2 Breaker and switch positions 41
6.3 Starting on utility power 42
6.4 Starting on battery (cold start) 42
6.5 Transferring to bypass and back 42
6.6 ECO mode 42
6.7 Battery test 42
6.8 Everyday use 42
6.9 What the panel tells you 43
6.10 Silencing the alarm 43
6.11 Shutting down 43
6.12 Maintenance bypass 44
6.13 Emergency power off 44

7 Touchscreen 45
7.1 The touchscreen on the unit 45
7.2 Home page and main menu 45
7.3 Data (readings) 46
7.4 Set (settings) 47
7.5 Control 49

8 Communication and monitoring 51
8.1 Communication ports 51
8.2 SNMP-M network card 51
8.3 UPS View software 52
8.4 Dry-contact card 52
8.5 Intelligent slot 52
8.6 Emergency power off (EPO) 53
8.7 Parallel setting 53

9 Maintenance 54
9.1 Maintenance schedule 54
9.2 Battery care 54
9.3 Component life 54
9.4 Battery life and temperature 54
9.5 Replacing the internal batteries 55
9.6 Battery handling and disposal 55
9.7 Storage and transport 56
9.8 Cooling 56

10 Troubleshooting 58
10.1 Reading an alarm 58
10.2 Alarm list 58

11 Specifications 61

A Ordering codes and accessories 63

B Warranty 64

C Acronyms and abbreviations 65

D AEC drawings 66
D.1 40X9 and EMPTY — AEC-FSP-20B 66
D.2 EXT — AEC-FSP-20E 68

E Quick reference 72
F Frequently asked questions 73
G Installation record 74

CHAPTER 1

01 Safety

Read this chapter before you install, operate or service the UPS. Safety messages also appear in the chapters where each task is described.

⚠ WARNING · IMPORTANT SAFETY INSTRUCTIONS — SAVE THESE INSTRUCTIONS

This manual contains important safety, installation and operating instructions for the FERRUS SP 20 kVA UPS (FERSP20000-40X9, FERSP20000-EMPTY and FERSP20000-EXT). Read the whole manual before you install or operate the unit, and keep it for future reference.

1.1 Battery safety

⚠ DANGER

The battery can cause electric shock and a high short-circuit current. The 40X9 model has 40 batteries inside (240 V DC). The EMPTY model has them once they are fitted. The EXT model is connected to an external battery cabinet.

- Wear rubber gloves and rubber-soled boots.
- Remove rings, watches and other metal objects.
- Use tools with insulated handles only.
- Do not lay tools or other metal objects on the batteries.
- The battery circuit is not isolated from the utility input. Check that there is no voltage between the battery terminals and ground before you touch them.
- Even with the input breaker open, the internal circuits stay connected to the battery. Open the battery breakers BAT1 · BAT2 (or the battery cabinet breaker) before you open any cover.

⚠ WARNING

- If a battery is damaged or shows signs of leakage, contact AEC service immediately.
- Do not dispose of batteries in fire: they can explode. Do not open or damage them: the electrolyte is toxic.
- Handle, transport and recycle batteries according to local regulations.

1.2 General safety

⚠ WARNING

Improper use can cause electric shock or fire.

- Switch the UPS off and isolate it before you clean it.
- Clean the UPS with a dry cloth only. Do not use liquid or aerosol cleaners.
- Never block the ventilation openings or insert objects into them.
- Installation must be done only by qualified personnel, according to the National Electrical Code (NFPA 70) and local codes.

1.3 Handling and transport

> **⚠ WARNING**
>
> The UPS is heavy: 452 lb (205 kg) for the 40X9, 218.3 lb (99 kg) for the EMPTY and 209.4 lb (95 kg) for the EXT. Move it on its casters on a flat floor only, with two or more people. Lock the caster brakes once it is in place.

- Move the UPS in its original packaging as far as the installation site.
- Do not tilt the UPS more than 10° while you move it.
- Transport and store the UPS upright.

1.4 Installation and EMC

- The UPS is hardwired. A qualified electrician must install it, to the National Electrical Code (NFPA 70) and local codes.
- Install an output circuit breaker between the UPS and the loads.
- This product is intended for commercial and industrial use. Installation restrictions or additional measures may be needed to prevent radio interference.

1.5 Standards

The UPS meets the UL 1778 standard. It is designed according to the following standards.

TABLE 1-1 Design standards

Standard	Subject
UL 1778	Uninterruptible power systems — safety (North America)
IEC 62040-1	UPS — general and safety requirements
IEC 62040-2	UPS — electromagnetic compatibility (EMC)
IEC 62040-3	UPS — performance and test requirements
IEC 61000-3-12	Harmonic currents, equipment above 16 A per phase
IEC 61000-3-11	Voltage fluctuations and flicker
IEC 61000-4-2, -4-3, -4-4	Immunity to electrostatic discharge, radiated fields, fast transients / bursts
IEC 61000-4-5, -4-6, -4-8	Immunity to surges, conducted disturbances, power-frequency magnetic fields
IEC 63000	Restriction of hazardous substances (RoHS) — technical documentation
NFPA 70 (NEC)	Installation: branch circuits, conductors, overcurrent protection, working space

1.5.1 FCC statement

This equipment has been tested and found to comply with the limits for a Class A digital device, pursuant to Part 15 of the FCC Rules. These limits are designed to provide reasonable protection against harmful interference when the equipment is operated in a commercial environment. This equipment generates, uses and can radiate radio-frequency energy and, if not installed and used in accordance with this manual, may cause harmful interference to radio communications. Operation of this equipment in a residential area is likely to cause harmful interference, in which case the user will be required to correct the interference at his own expense.

02

CHAPTER 2

Product description

The three 20 kVA models and their codes, the front and rear panels, the inside of the cabinet, the touchscreen, the isolation transformer, how the UPS works, its operating modes and its protections.

2.1 Introduction

FERRUS SP 20 kVA is a 20 kVA online double-conversion UPS with an output isolation transformer and a 120/240 V split-phase output. It comes in three models:

- **FERSP20000-40X9** — tower with 40 × 12 V 9 Ah batteries inside, in two strings, each with its own battery breaker (BAT1 · BAT2).
- **FERSP20000-EMPTY** — the same tower with the battery compartment supplied empty, to be fitted on site.
- **FERSP20000-EXT** — a smaller tower with no battery compartment, for an external battery cabinet.

The FERRUS SP 6–10 kVA and the FERRUS SP RT 6–10 kVA are described in their own manuals.

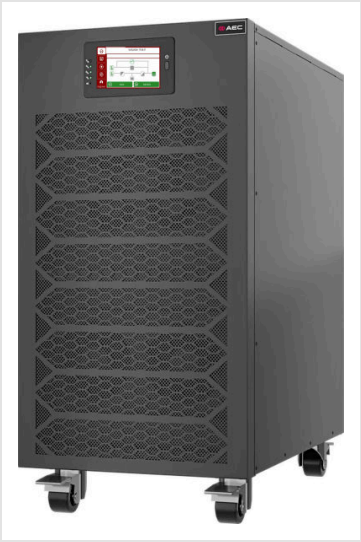

FIGURE 2-1 FERRUS SP 20 kVA, FERSP20000-40X9

TABLE 2-1 FERRUS SP 20 kVA at a glance

Feature	What it gives you
Isolation	No wire runs from the supply to the loads: noise and faults stay on the utility side.
120/240 V	Two 120 V legs, 240 V across them. Jumpers set the output for the site.
kVA = kW	Output power factor 1; input power factor above 0.99.
Online, up to 93 %	Double conversion; ECO mode selectable.
Touchscreen	Readings, settings, alarms, tests; two access levels.
Maintenance bypass	UPS / BYPASS switch on the rear panel, standard on all three models.

Feature	What it gives you
Battery	40X9: 40 blocks inside, 10 min at half load, 25 min at a quarter load. EMPTY: compartment for 40 blocks. EXT: external cabinet.

2.2 Models and ordering codes

TABLE 2-2 FERRUS SP 20 kVA models

Code	Battery	Cabinet W × D × H	Weight	Drawing
FERSP20000-40X9	40 × 12 V 9 Ah inside, 2 strings of 20, 240 V DC; breakers BAT1 · BAT2	15.8 × 28.7 × 38.7 in (401 × 729 × 983 mm)	452 lb (205 kg)	AEC-FSP-20B
FERSP20000-EMPTY	Same cabinet, compartment supplied empty (room for 40 × 12 V 9 Ah); breakers BAT1 · BAT2	15.8 × 28.7 × 38.7 in (401 × 729 × 983 mm)	218.3 lb (99 kg)	AEC-FSP-20B
FERSP20000-EXT	No battery inside: external battery cabinet, 240 V DC, on BAT+ / BAT–	13.8 × 22.7 × 27.8 in (351 × 575 × 707 mm)	209.4 lb (95 kg)	AEC-FSP-20E

All three are rated 20,000 VA / 20,000 W. Height includes the casters; depth is the body without the terminal cover and handles. Overall sizes are in Table 4-2.

How to read the code. FERSP 20000 -40X9: series FERRUS SP · rating in VA · battery: 40 × 12 V 9 Ah inside. -EMPTY: compartment supplied empty. -EXT: for an external battery cabinet.

> **i NOTE** The 40X9 and the EMPTY share one cabinet, one rear panel and one terminal height. The EXT is a different, smaller cabinet: its rear panel, input breaker and terminal height are different. Each picture and table in this manual says which model it shows.

2.3 What is in the box

- 1 × FERRUS SP 20 kVA UPS (40X9 with its 40 internal batteries; EMPTY with the battery compartment empty; EXT with no battery compartment)
- 1 × user manual
- Accessory kit — check its contents against the packing list in the box

Inspect the contents on delivery. Report damage to the carrier and missing parts to AEC.

2.4 Front panel

The front is the same on all three models; the EXT cabinet is lower and narrower.

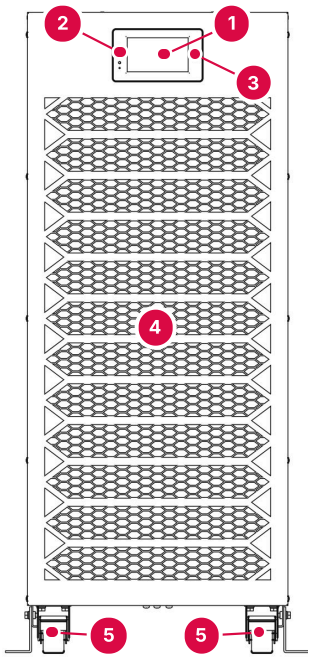

1	Color touchscreen
2	Status LEDs
3	Power button
4	Front grille, cooling air in
5	Casters, two with brakes

FIGURE 2-2 Front (40X9 · EMPTY), AEC drawing AEC-FSP-20B-03

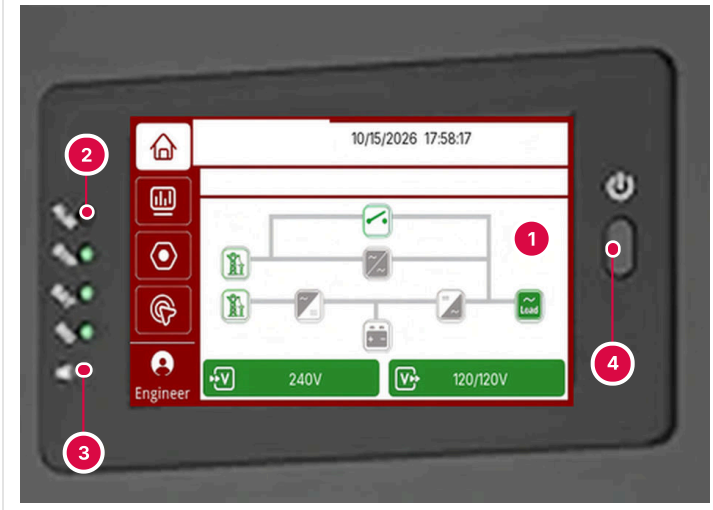

1 Color touchscreen (Section 7.1)	3 Mute LED: buzzer silenced
2 Status LEDs ALM · BYP · BAT · INV (Table 2-4)	4 Power button

FIGURE 2-3 Display panel

TABLE 2-3 Front panel

No.	Part	Description
1	Color touchscreen	AEC interface: power flow, readings, settings and commands (Chapter 7).
2	Status LEDs	ALM, BYP, BAT, INV and buzzer mute, left of the screen (Table 2-4).
3	Power button	On and off, as on the screen's Control page.
4	Front grille	Cooling air in; it leaves at the rear (Section 9.8).
5	Casters	Four casters, 3.1 in (78 mm) high, two with brakes. Lock them once the UPS is in position.

TABLE 2-4 Status LEDs

LED	Meaning
ALM	Alarm: lit on a fault or a warning.
BYP	Bypass: lit while the load is on the bypass.
BAT	Battery: lit while the battery supplies the load.
INV	Inverter: lit while the inverter supplies the load.
Mute	The buzzer is muted.

In normal operation only INV is lit.

2.5 Rear panel — 40X9 and EMPTY

The numbers are those of the AEC drawing AEC-FSP-20B-04 (Figure D-2).

TABLE 2-5 Rear panel, 40X9 and EMPTY

No.	Part	Function
1	Intelligent slots × 2	SNMP-M card and dry-contact card (Section 8.5).
2	Parallel ports × 2	DB9, parallel cables, up to 3 units (Section 4.9).
3	RS232	DB9, monitoring software (Section 8.3).
4	EPO	Normally closed loop (Section 8.6).
5	USB	Monitoring software.
6	Maintenance bypass switch	UPS / BYPASS (GSH2-115), standard (Section 6.12).
7	Input breaker, 3-pole 125 A	Poles Byp-L1 · Mains-L1 · I/P-L2.
8	Terminal strips, behind cover	OUTPUT · PE | INPUT · PE · BATTERY (Section 4.6).
9	Battery breakers BAT1 · BAT2	One per internal string (Section 5.1). On the EMPTY they protect the strings fitted on site.
10	Transformer fans × 2	Cooling of the output transformer; air out at the rear.

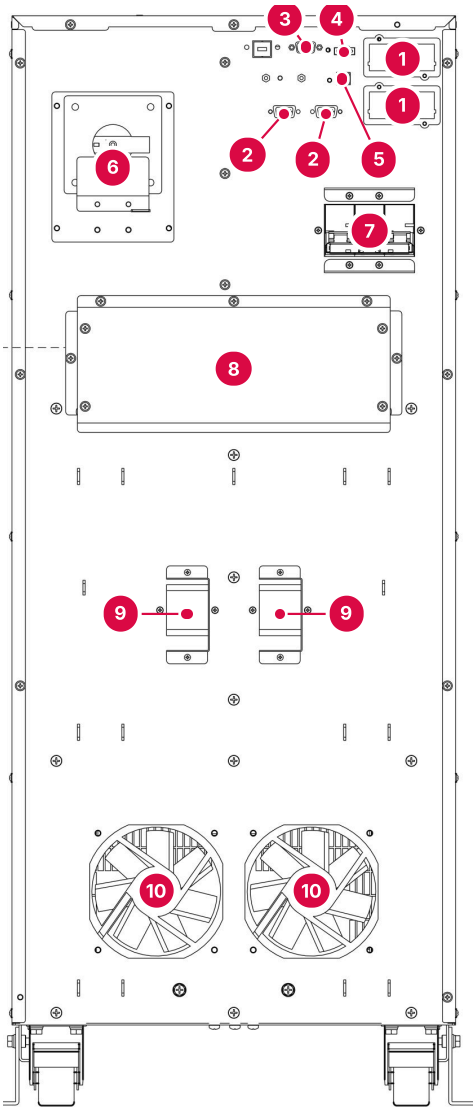

1	Intelligent slots × 2
2	Parallel ports × 2 (Figure 2-7)
3	RS232
4	EPO
5	USB
6	Maintenance bypass switch UPS / BYPASS
7	Input breaker, 3-pole 125 A: Byp-L1 · Mains-L1 · I/P-L2
8	Terminal cover; two terminal strips behind it, center line 26.9 in (684 mm) above the floor
9	Battery breakers BAT1 · BAT2, one per internal string
10	Transformer fans × 2, air out

FIGURE 2-4 Rear panel, FERSP20000-40X9 and FERSP20000-EMPTY (AEC drawing AEC-FSP-20B-04)

The 20 kVA has no output receptacles: all loads are hardwired to the output terminal strip.

Figure 2-5 shows the same parts on the unit, with the numbers of Table 2-5. The terminal cover (8) sits across the middle of the rear panel, below the input breaker.

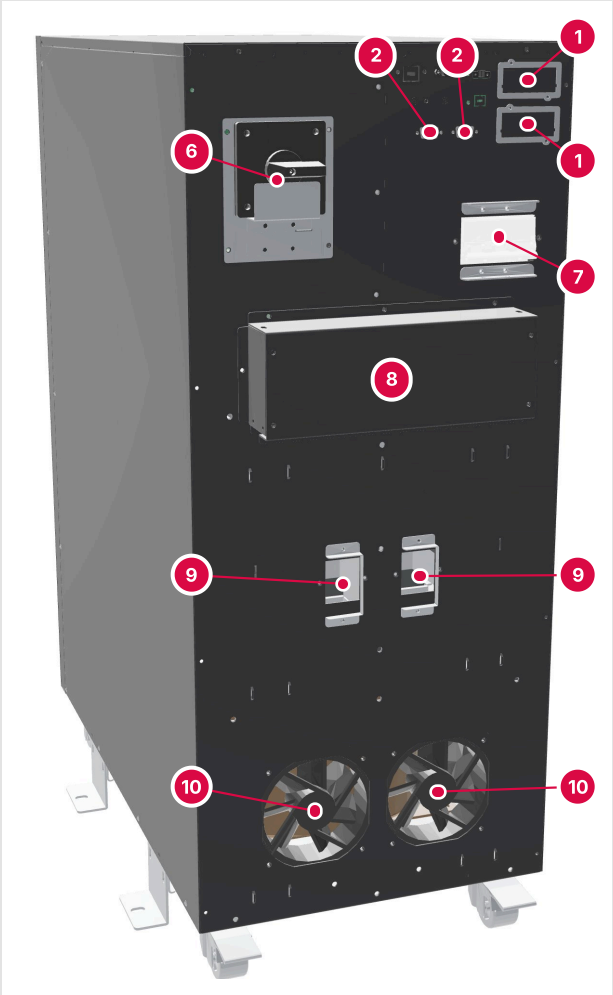

1	Intelligent slots × 2
2	Parallel ports × 2
6	Maintenance bypass switch UPS / BYPASS
7	Input breaker, 3-pole 125 A: Byp-L1 · Mains-L1 · I/P-L2
8	Terminal cover; the two terminal strips are behind it
9	Battery breakers BAT1 · BAT2
10	Transformer fans × 2, air out

FIGURE 2-5 Rear of the FERSP20000-40X9, terminal cover fitted (rendering from the factory 3D model; the EMPTY is the same)

2.6 Rear panel — EXT

TABLE 2-6 Rear panel, EXT

No.	Part	Function
1	Intelligent slots × 2	SNMP-M card and dry-contact card.
2	Parallel ports × 2	DB9, parallel cables, up to 3 units.
3	RS232	DB9, monitoring software.
4	EPO	Normally closed loop.
5	USB	Monitoring software.
6	Maintenance bypass switch	UPS / BYPASS (GSH2-115), standard.
7	Input breaker, 2-pole 125 A	L1 · L2. There is no separate bypass pole and there are no battery breakers: the battery breaker is in the external cabinet.
8	Terminal strips, behind cover	OUTPUT · PE | INPUT · PE · BATTERY — the same strips as the 40X9, lower on the cabinet.

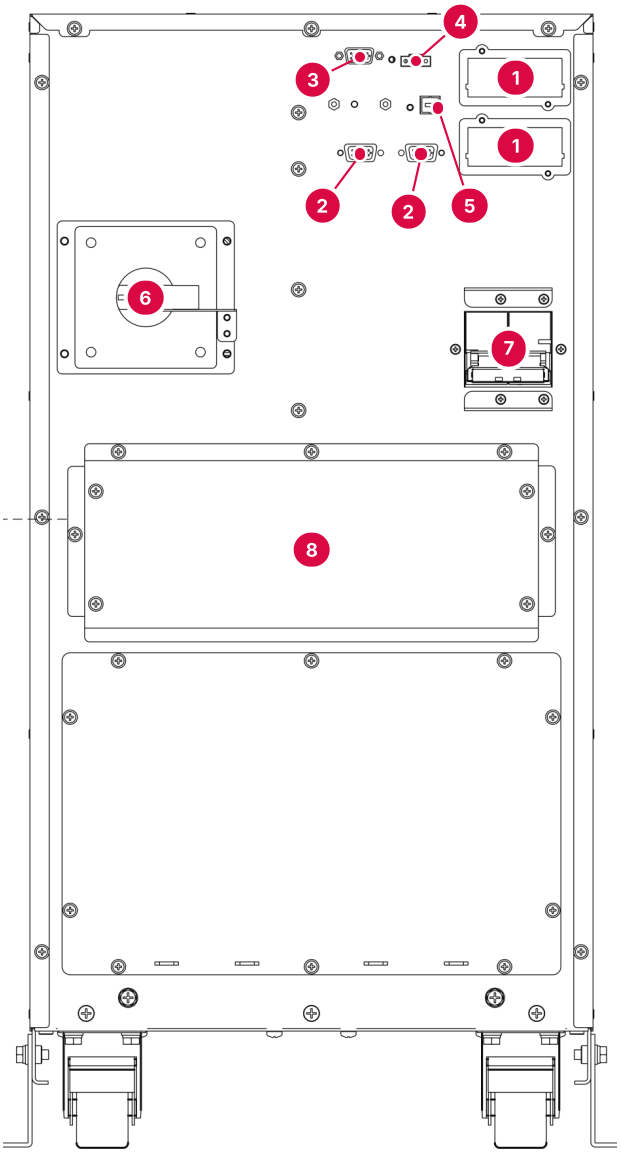

1. Intelligent slots × 2
2. Parallel ports × 2 (Figure 2-7)
3. RS232
4. EPO
5. USB
6. Maintenance bypass switch UPS / BYPASS
7. Input breaker, 2-pole 125 A: L1 · L2
8. Terminal cover; two terminal strips behind it, center line 15.5 in (393 mm) above the floor

FIGURE 2-6 Rear panel, FERSP20000-EXT (AEC drawing AEC-FSP-20E-04)

On the EXT the transformer fans sit behind the front grille; the air still flows from front to rear (Section 9.8).

2.7 Communication ports

The ports are the same on the three models (the EXT has them closer together). There is no RS485 port on the 20 kVA.

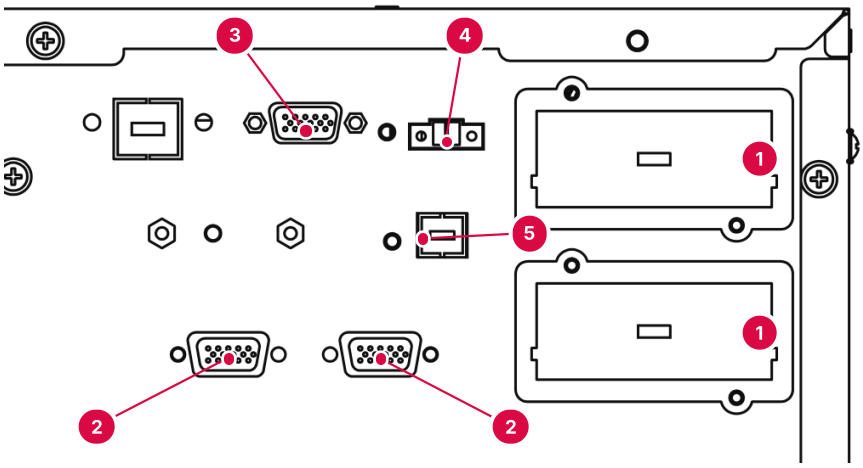

1. Intelligent slot 1 and slot 2 (SNMP-M, dry contacts)
2. Parallel ports × 2, DB9
3. RS232, DB9
4. EPO terminal, normally closed loop
5. USB

FIGURE 2-7 Communication ports, top right of the rear panel (40X9 · EMPTY shown)

2.8 Inside the cabinet

How the FERRUS SP 20 kVA (40X9 and EMPTY) is built, seen from the right with the side panel removed. Air enters at the front grille, crosses the power stage and the battery shelves and leaves through the fans at the rear.

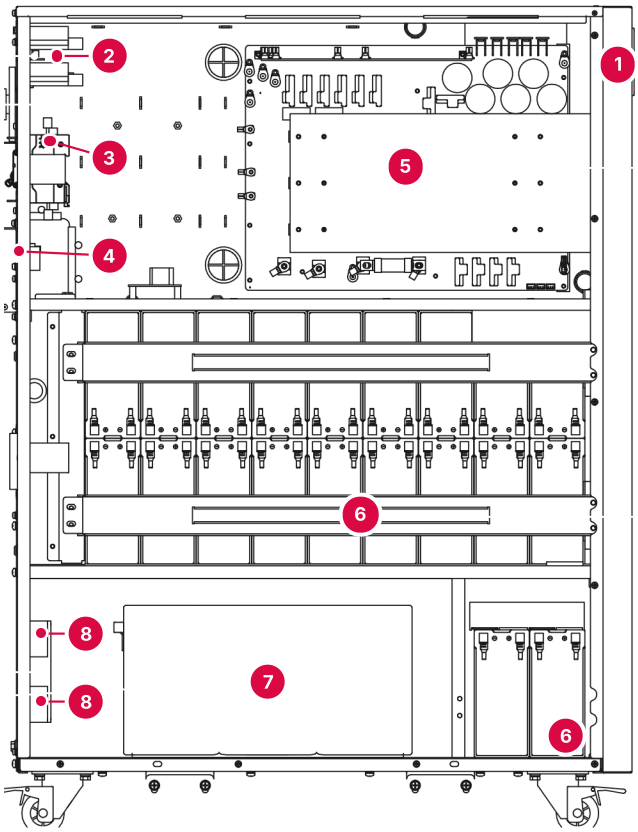

1. Touchscreen, on the front at the top
2. Intelligent slots, reached from the rear
3. Maintenance bypass switch, rear
4. Terminal strips and breakers, behind the rear terminal cover
5. Power stage: rectifier, inverter and charger
6. Internal batteries on the shelves (empty on the EMPTY model)
7. Output isolation transformer
8. Rear transformer fans

FIGURE 2-8 FERSP20000-40X9, right side with the side panel removed (rear on the left, front on the right)

Figure 2-9 shows the same cabinet in a rendering, from the rear right with the side panel and the terminal cover removed.

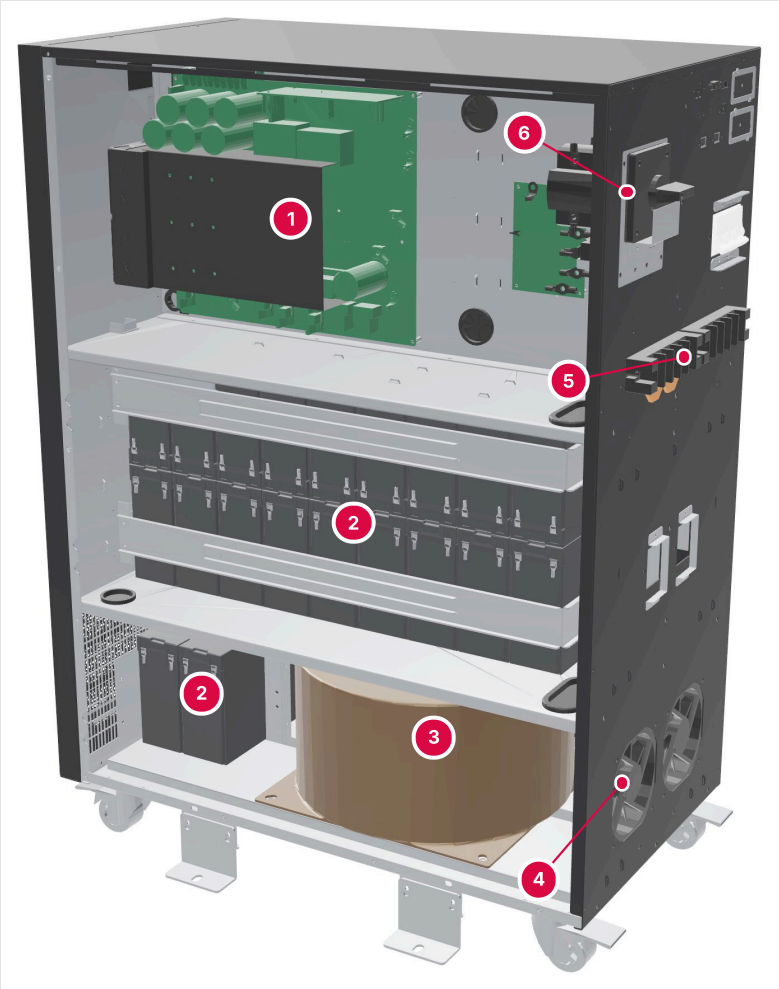

1. Power stage: rectifier, inverter and charger
2. Internal batteries on the shelves (empty on the EMPTY model)
3. Output isolation transformer
4. Rear transformer fans
5. Terminal strips, rear panel
6. Maintenance bypass switch

FIGURE 2-9 Illustration — internal layout simplified. FERSP20000-40X9, side panel removed, seen from the rear right (front on the left)

2.9 Touchscreen at a glance

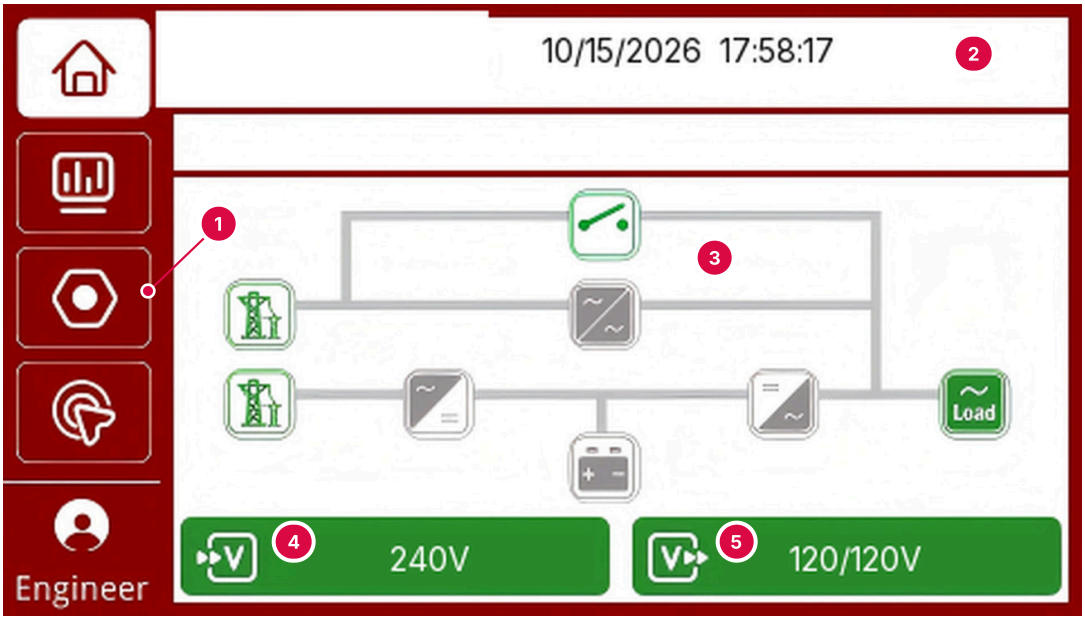

1. Side menu: Home, Data, Set, Control; user level at the bottom (Engineer)
2. Status bar: current message, buzzer mute, date and time
3. Power flow: utility, bypass, rectifier, inverter, battery and load — green active, grey not active
4. Input voltage (L1–L2)
5. Output voltage of the two legs, L1 / L2

FIGURE 2-10 Home page

Two access levels: **User** reads the pages and mutes the buzzer; **Engineer** also changes the settings and runs the commands. The full menu is in Chapter 7.

2.10 The isolation transformer

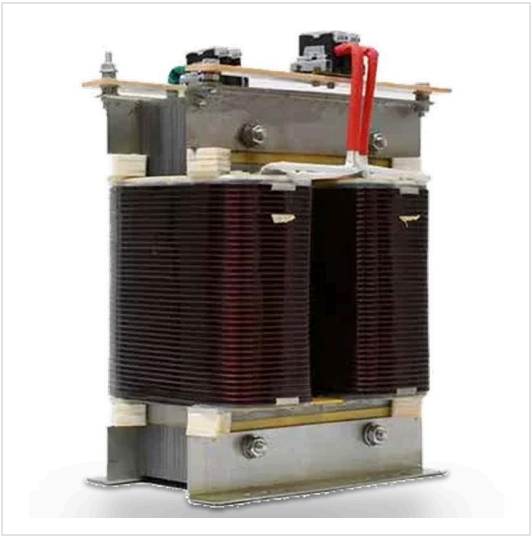

FIGURE 2-11 The output isolation transformer

Galvanic isolation. No wire runs from the supply to the loads: the power crosses the transformer as a magnetic field, so noise and faults on the utility stay on the utility side.

120 V and 240 V from one UPS. Two secondary windings make the two 120 V legs; in series, 240 V. Jumpers on the output terminals choose the wiring (Section 4.7).

On the bypass too. The bypass joins ahead of the transformer: in bypass mode the loads stay on its windings, but utility disturbances are not filtered.

For mixed and motor loads. 120 V equipment and 240 V machines on the same UPS, as on a panel board.

TABLE 2-7 Split-phase output facts

Value	Meaning
180°	O/P-L1–N1 and O/P-L2–N2 in opposition, as in a North American split-phase service.
120/240 V	120 V on each leg, 240 V from O/P-L1 to O/P-N2. The rated leg voltage can be set to 110, 115, 120 or 127 V at commissioning (Set › Rate Set).
100 %	One 120 V or one 240 V output carries the full rating; two separate 120 V outputs, 50 % each.
84 A	Output current on each 120 V leg at 120 V.

2.11 How the UPS works

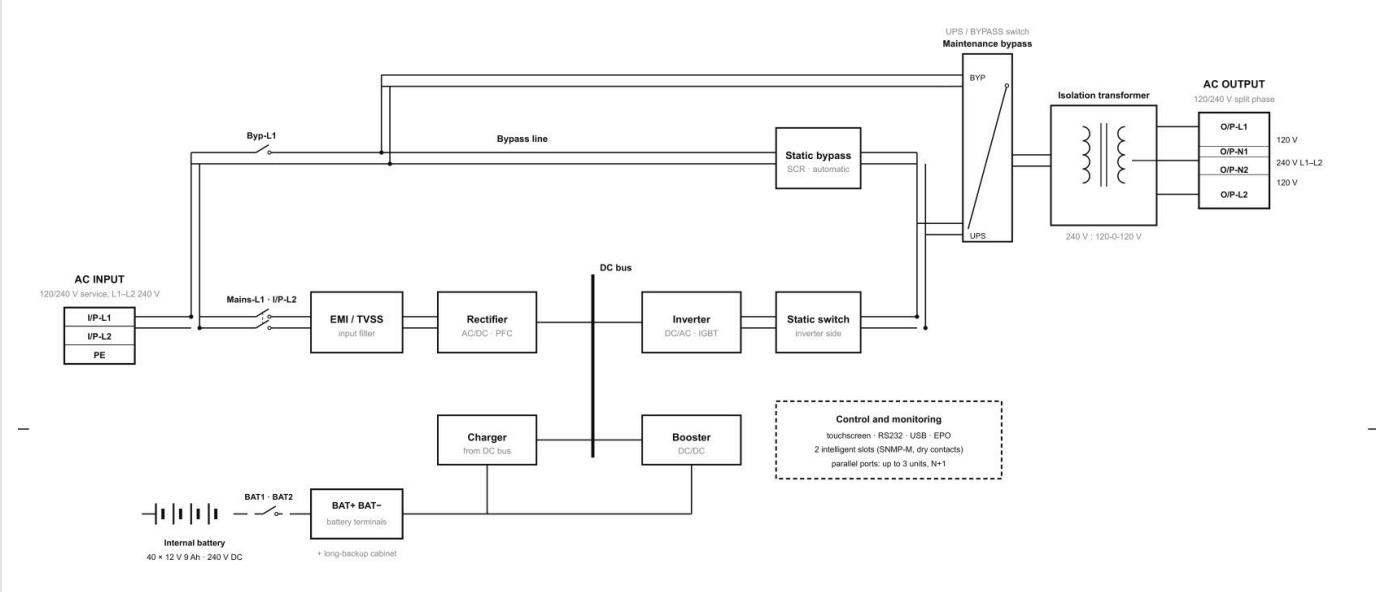

FIGURE 2-12 Single-line diagram, 40X9 and EMPTY (AEC drawing AEC-FSP-20B-02). The EXT has a 2-pole input breaker and no internal battery (Figure D-4).

- **Surge suppression (TVSS) and EMI/RFI filters** protect against surges and filter electromagnetic and radio-frequency interference on the utility line.
- **Rectifier / power-factor correction (PFC)** converts the utility AC into a regulated DC bus while drawing a near-sinusoidal input current (power factor above 0.99).
- **Inverter.** A 3-level IGBT inverter rebuilds a precise sine wave from the DC bus. On utility and on battery it runs online continuously.
- **Charger and DC-to-DC booster.** The charger float-charges the battery while the utility is present. On a utility failure the booster takes the battery energy back to the DC bus.

- **Static bypass.** On overload, over-temperature or a fault the load moves to the bypass automatically, ahead of the transformer.
- **Maintenance bypass.** The UPS / BYPASS switch feeds the load from the bypass line while the UPS is serviced (Section 6.12).
- **Output isolation transformer** (240 V : 120-0-120 V) isolates the output and makes the two 120 V legs (Section 2.10).

2.12 Operating modes

TABLE 2-8 Operating modes

Mode	When	Panel
Line (normal)	Utility present: PFC and inverter feed the load; the charger float-charges the battery.	INV lit; power flow utility → rectifier → inverter → load
Battery	Utility abnormal: the battery takes over without interrupting the output.	INV and BAT lit; buzzer; remaining time in Data › Battery
Bypass	Overload, over-temperature or a fault, or a manual bypass: the load moves to the bypass.	BYP lit; the alarm in Data › Current Alarm
ECO	System mode ECO: the load stays on the bypass while it is good; the inverter takes over when it is not.	BYP lit while the bypass is good
Cold start	No utility: the UPS is started from the battery (Section 6.4).	As battery mode
Maintenance bypass	Switch on BYPASS: the load is fed from the utility through the switch while the UPS is serviced (Section 6.12).	Alarm 39 “Maintenance breaker closed”
Parallel	Up to three 20 kVA units share the load, or run N+1 (Section 4.9).	Set, page 2

NOTICE

On bypass, on maintenance bypass and in ECO mode the load is not protected from utility disturbances.

2.13 Protections

- Input surge suppression (TVSS) and EMI/RFI filters.
- Overload: 110 % for 10 min, 130 % for 1 min, 150 % for 30 s, then transfer to bypass; at 150 % the output shuts down after 1 min.
- Output short circuit; bypass overload timeout.
- Rectifier, inverter and output-transformer over-temperature; fan failure.
- Battery low and end-of-discharge shutdown; battery reverse connection.
- Bypass phase sequence; EPO input (normally closed loop).

CHAPTER 3

03 Planning the installation

Sizing the load, estimating the runtime, choosing the output configuration and the model, and running on a generator — before you install.

3.1 Sizing the load

The output power factor is 1: the UPS delivers its full rating in watts — 20,000 W. Size the UPS on the watts the loads draw.

1. List every device that will run on the UPS.
2. Read its power in watts on the label or in the data sheet. If only volts and amps are given, multiply them (V × A). That gives VA, which is equal to or higher than the watts, so the estimate is on the safe side.
3. Add the watts. Keep the total at or below 80 % of the UPS rating: the margin covers start-up currents, future equipment and battery ageing.
4. Check that no leg is above its current limit, 84 A (Table 4-3).

TABLE 3-1 Worked example — a light-industrial line on a FERRUS SP 20 kVA, configuration 04

Load	Watts	Leg L1	Leg L2	Connected
240 V machines	6,000 W	25 A	25 A	O/P-L1–O/P-N2
120 V controls and PCs	3,000 W	25 A	—	O/P-L1–O/P-N1
120 V network and lighting	2,400 W	—	20 A	O/P-L2–O/P-N2
Total	11,400 W (57 %)	50 A	45 A	limit 84 A per leg

Runtime. About 8 minutes at 57 % with the 40 internal batteries of the 40X9 — between the 50 % and 75 % columns of Table 5-1.

✓ TIP Measure rather than guess: once the UPS runs, Data › Load shows the real load in % and kW for each leg. Recheck after you add equipment.

3.2 Choosing the model

TABLE 3-2 Which model for which site

You need	Model
About 3 min at full load, 10 min at half load, ready to run	FERSP20000-40X9
The 40X9 cabinet, with batteries bought and fitted on site	FERSP20000-EMPTY
Long runtime from an external battery cabinet, smaller and lighter UPS	FERSP20000-EXT

The 40X9 and the EMPTY can also take an external long-backup cabinet on BAT+ / BAT− (Section 5.3). AEC sizes the external battery for the runtime you need.

3.3 Estimating the runtime

1. Work out the load as a percentage of the rating.

2. Find the two load columns either side of it in Table 5-1 and estimate between them.
3. Allow a margin: the runtime is shorter with batteries that are old, cold, hot or not fully charged.
4. If the runtime is too short, add battery capacity (ask AEC) — or reduce the load: halving the load roughly doubles the runtime or more.

3.4 Choosing the output configuration

TABLE 3-3 Which configuration for which site

Your loads	Configuration	Remember
Only 120 V equipment, two groups	01	Each group up to 50 % of the rating. Balance the two groups.
Only 120 V equipment, one group	02	One output, full rating at 120 V.
Only 240 V equipment	03	One output, full rating at 240 V; no neutral needed by the load.
120 V and 240 V equipment, or a 120/240 V panel board	04	Keep each leg within its current limit.

Balancing the legs. In configurations 01 and 04 each 120 V leg has its own current limit — 84 A. A 240 V load draws the same current from both legs; a 120 V load draws only from its own leg. Add up each leg separately (see Table 3-1) and move 120 V loads from the heavier leg to the lighter one until both are within the limit.

Motor loads. The starting current of a motor can be several times its running current. It must stay within the overload capability of the UPS (150 % for 30 s, Table 11-1). Start large motors first, with the other loads already running at low power — or ask AEC to check the application.

3.5 Running on a generator

The UPS accepts an input of 176–275 V (L1–L2, 240 V or 208 V nominal) and 40–70 Hz, so it rides through the voltage and frequency swings of a standby generator. Its PFC input (power factor above 0.99) loads the generator cleanly.

- As a general rule, choose a generator rated at least 1.5 times the UPS input power, so that it can also cover the battery recharge.
- Let the generator reach stable voltage and frequency before the transfer switch connects it to the UPS. The UPS stays on battery until the input is within range.
- If the UPS keeps returning to battery while on the generator, the generator is too small or unstable: check its voltage and frequency.

CHAPTER 4

04 Installation

Unpacking, the site, dimensions and clearances of each model, the electrical connection, the two terminal strips, the output configurations, parallel systems and communication.

> **WARNING**
>
> The UPS must be installed and wired only by qualified electricians, according to the National Electrical Code (NFPA 70) and local codes.

4.1 Unpacking and inspection

1. Open the package and check its contents (Section 2.3). Check the model code on the rating label: 40X9, EMPTY or EXT.
2. Inspect the unit for transport damage. If anything is damaged or missing, do not switch it on: notify the carrier and your AEC dealer immediately.
3. If the UPS was unpacked in a cold place, wait until it is completely dry inside and out before you install it: condensation can cause electric shock.

4.2 Site and environment

TABLE 4-1 Operating environment

Item	Requirement
Location	Indoors, ventilated, on a level floor rated for the weight; away from water, flammable gases and corrosive agents
Temperature	32–104 °F (0–40 °C); battery life is best at 59–77 °F (15–25 °C)
Humidity	Below 95 %, non-condensing
Altitude	Full power up to 3,300 ft (1,000 m); derate above (Table 11-2)
Clearance	At least 20 in (500 mm) on all four sides; front and rear vents open
Working space	Keep the NEC 110.26 working space in front of the rear panel (terminals and breakers)

4.3 Dimensions and clearances

TABLE 4-2 Dimensions, installation and cooling, by model

Item	40X9 · EMPTY (AEC-FSP-20B)	EXT (AEC-FSP-20E)
Body W × D × H	15.8 × 28.7 × 38.7 in (401 × 729 × 983 mm)	13.8 × 22.7 × 27.8 in (351 × 575 × 707 mm)
Overall width, with brackets	18.4 in (467 mm)	16.0 in (407 mm)
Overall depth, cover and handles included	31.0 in (787 mm)	25.1 in (637 mm)
Display center above the floor	36.1 in (916 mm)	25.5 in (647 mm)

Item	40X9 · EMPTY (AEC-FSP-20B)	EXT (AEC-FSP-20E)
Casters	4, two with brakes, 3.1 in (78 mm)	4, two with brakes, 3.1 in (78 mm)
Weight	452 lb (205 kg) · EMPTY 218.3 lb (99 kg)	209.4 lb (95 kg)
Floor area with clearances	55.2 × 68.1 in (1,401 × 1,729 mm)	53.2 × 62.0 in (1,351 × 1,575 mm)
Caster centers	12.6 × 24.7 in (320 × 628 mm)	10.2 × 18.8 in (260 × 478 mm)
Floor anchors	4 brackets, 17.3 in (440 mm) apart, slots 10 × 17 mm, M8 anchors by the installer	4 brackets, 15.0 in (380 mm) apart, slots 10 × 17 mm, M8 anchors by the installer
Terminal center line above the floor	26.9 in (684 mm)	15.5 in (393 mm)
Cooling	Front to rear; transformer fans exhaust at the rear	Front to rear; transformer fans behind the front grille

Height includes the casters. The full AEC drawings of each model are in Appendix D.

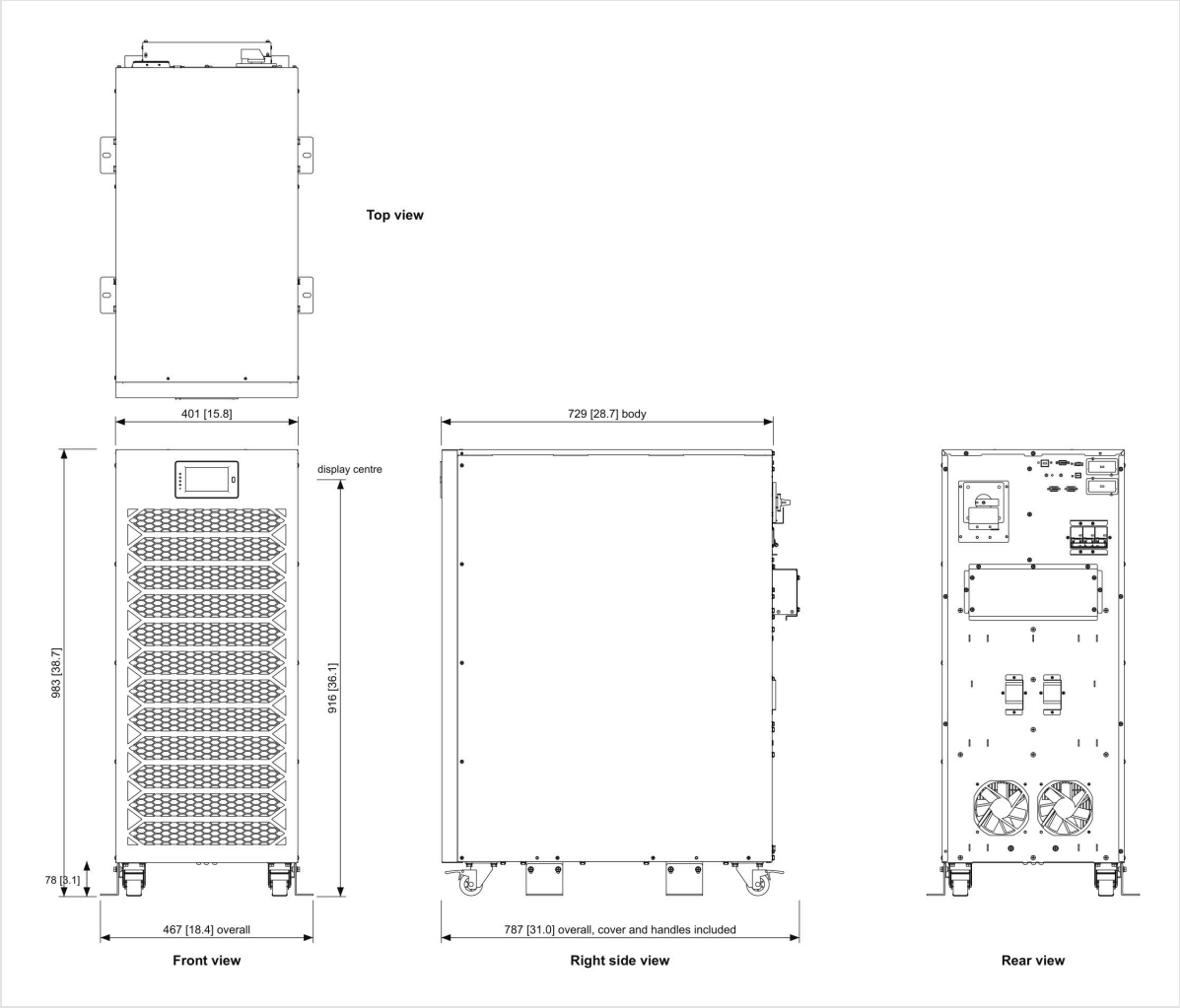

FIGURE 4-1 Dimensions, FERSP20000-40X9 and FERSP20000-EMPTY, mm [in] (AEC drawing AEC-FSP-20B-03)

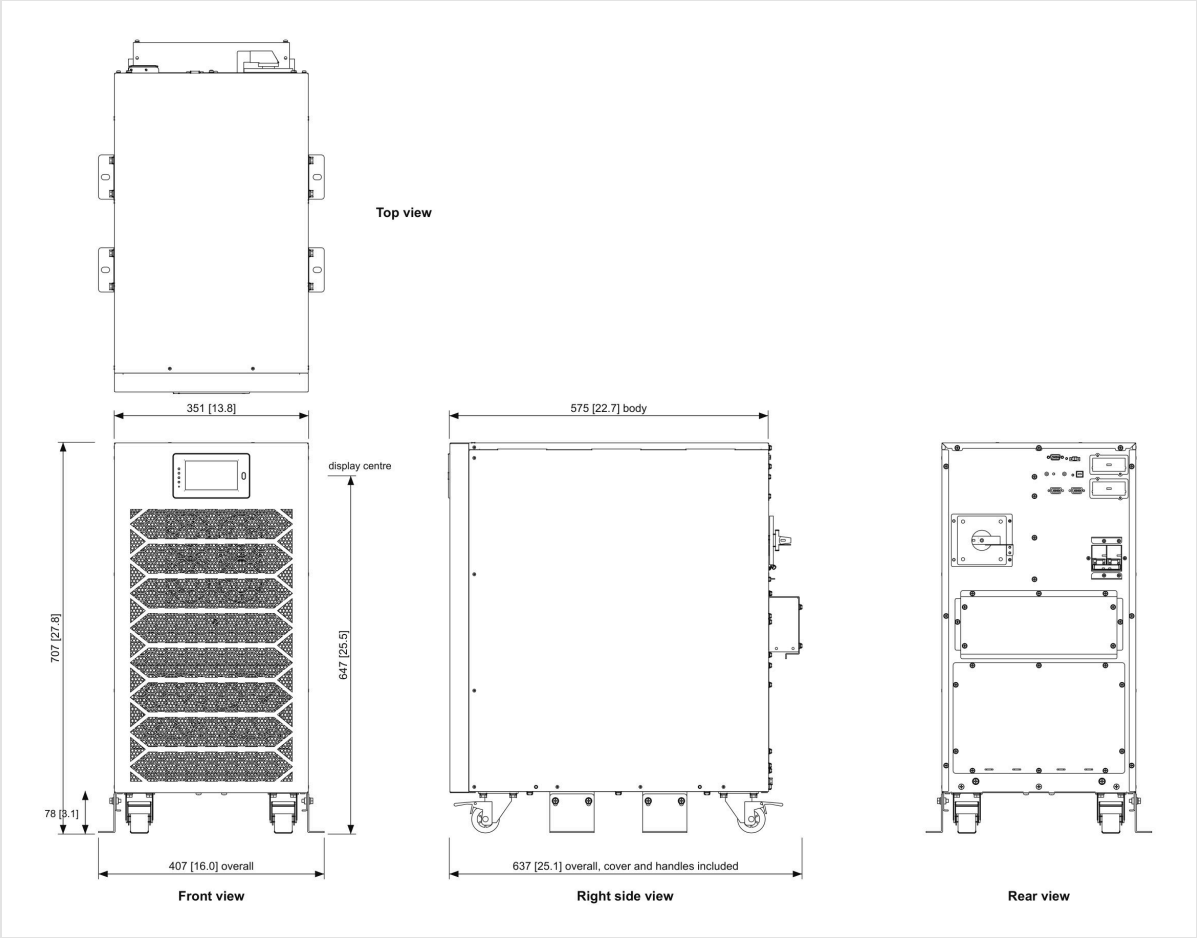

FIGURE 4-2 Dimensions, FERSP20000-EXT, mm [in] (AEC drawing AEC-FSP-20E-03)

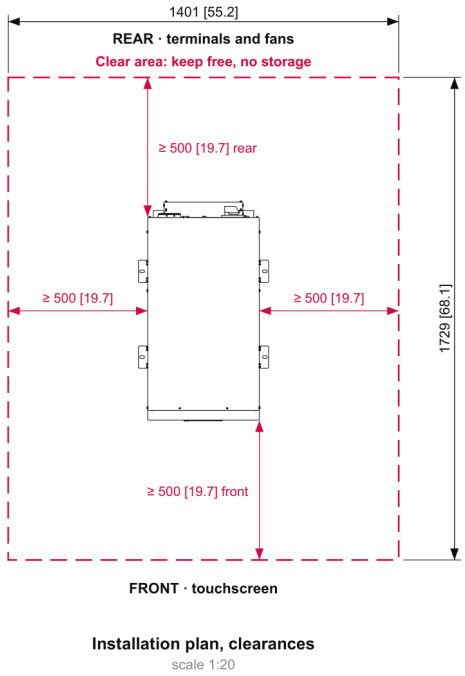

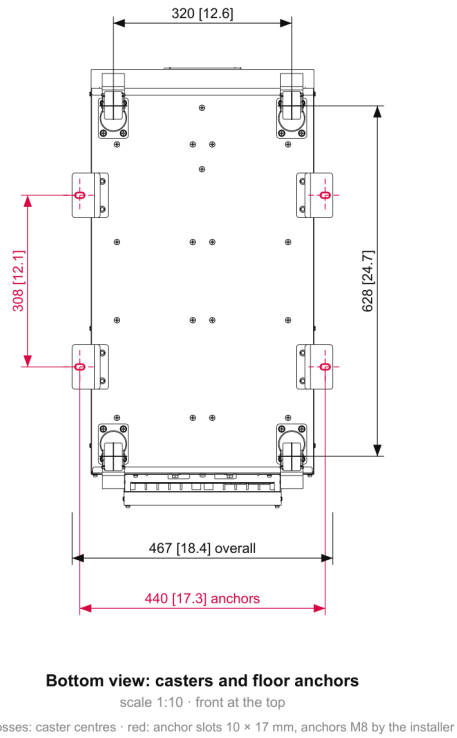

FIGURE 4-3 Clearances and floor anchors, 40X9 and EMPTY, mm [in] (AEC drawing AEC-FSP-20B-06). The EXT is in Figure D-8.

4.4 Placing the tower

1. Roll the tower into place on its casters.
2. Leave at least 20 in (500 mm) free on all four sides. Keep the front grille and the rear vents clear. Do not put the rear against a wall, or the exhaust into another unit's intake.
3. Lock the caster brakes.
4. For a fixed or seismic installation, anchor the four brackets to the floor with M8 anchors (by the installer).
5. EXT: place the external battery cabinet next to the UPS, within reach of the battery cables.

Keep the UPS away from water, heat sources, flammable gas and corrosive agents.

4.5 Electrical connection

⚠ *WARNING*

Switch off and lock out the utility supply before wiring. Open the battery breakers BAT1 · BAT2 (EXT: the battery cabinet breaker) before you open any cover. Do not feed the UPS from a wall receptacle.

The input is the two line conductors of the 120/240 V or 120/208 V service (I/P-L1, I/P-L2, 240 V or 208 V between them) and the equipment grounding conductor. **There is no input neutral.** The output neutrals O/P-N1 and O/P-N2 come from the isolation transformer.

TABLE 4-3 Input and output currents

Model	Input current, max.	Output current per 120 V leg	Battery current, max.
40X9 · EMPTY · EXT	125 A	84 A	110 A

TABLE 4-4 Cable sizes recommended by the factory

Conductor	Size
AC input I/P-L1, I/P-L2	4 AWG (25 mm²)
AC output O/P-L1, O/P-N1, O/P-L2, O/P-N2	4 AWG (25 mm²)
Battery BAT+, BAT−	3 AWG (35 mm²)
PE (grounding)	As the largest phase conductor

i NOTE In the US, size the conductors and the overcurrent protection to the National Electrical Code for the actual installation: input breaker at or above both the maximum input current and 125 % of the rated input current at 240 V (NEC 215.2, 215.3, 240.6), conductor ampacity at 75 °C for the terminations (NEC 110.14(C)). The installer's calculation prevails over the factory sizes; NEC sizes can be larger. The terminals are M6 studs for ring lugs: choose lugs that fit the stud and the 0.83 in (21 mm) pitch. On a 208 V supply the rated input current is about 103 A, and 125 % of it (129 A) is above the 125 A of Table 4-5: ask AEC for the breaker and conductor before you install.

TABLE 4-5 Recommended overcurrent protection and copper conductors

Circuit	Sizing current	Recommended breaker (NEC 240.6)	Copper conductor, 75 °C (NEC 310.16)
Input L1, L2 (2-pole)	125 A max.; 125 % × 89.6 A rated = 112 A	125 A	1 AWG
Output leg, max. 84 A (configurations 01, 03, 04)	105 A	110 A	2 AWG
Battery cable, max. 110 A	137.5 A	—	1/0 AWG

The example assumes copper THHN/THWN conductors at 75 °C, no more than three current-carrying conductors in the raceway and an ambient of 86 °F (30 °C). These sizes are larger than the factory sizes: check with AEC that lugs for them fit the M6 studs at the 0.83 in (21 mm) pitch before you plan the cables.

1. Remove the terminal cover on the rear panel (Figure 2-4 item 8, Figure 2-6 item 8). Cables enter from below through the cover.
2. Size the conductors and protection as above.
3. Connect the cables to the terminals as shown in Section 4.6.
4. Strain-relieve every cable. Keep the communication cables (RS232, USB, EPO, parallel) away from the power cables.

4.6 Terminal strips

All three models have the same two terminal strips behind the terminal cover. Seen from the rear: **strip 1 OUTPUT** — O/P-L1 · O/P-N1 · O/P-L2 · O/P-N2 · PE; **strip 2** — I/P-L1 · I/P-L2 · PE · BAT+ · BAT−. The terminals are M6 studs for ring lugs (Ø 6 mm), 0.83 in (21 mm) apart; the strips are 5.3 in (134 mm) long each, 2.2 in (56 mm) apart, 8.8 in (224 mm) from the first to the last terminal; the terminals are 1.4 in (35 mm) high.

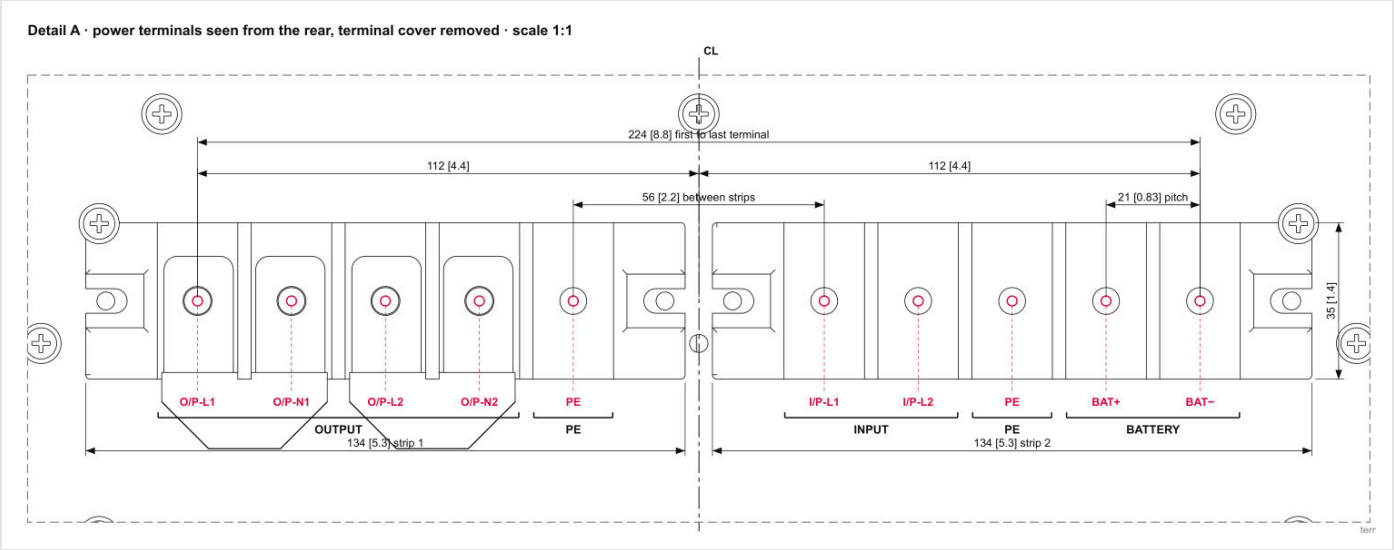

FIGURE 4-4 Power terminals seen from the rear, terminal cover removed, mm [in] (AEC drawing AEC-FSP-20B-05, detail A; identical on AEC-FSP-20E-05 except the height above the floor)

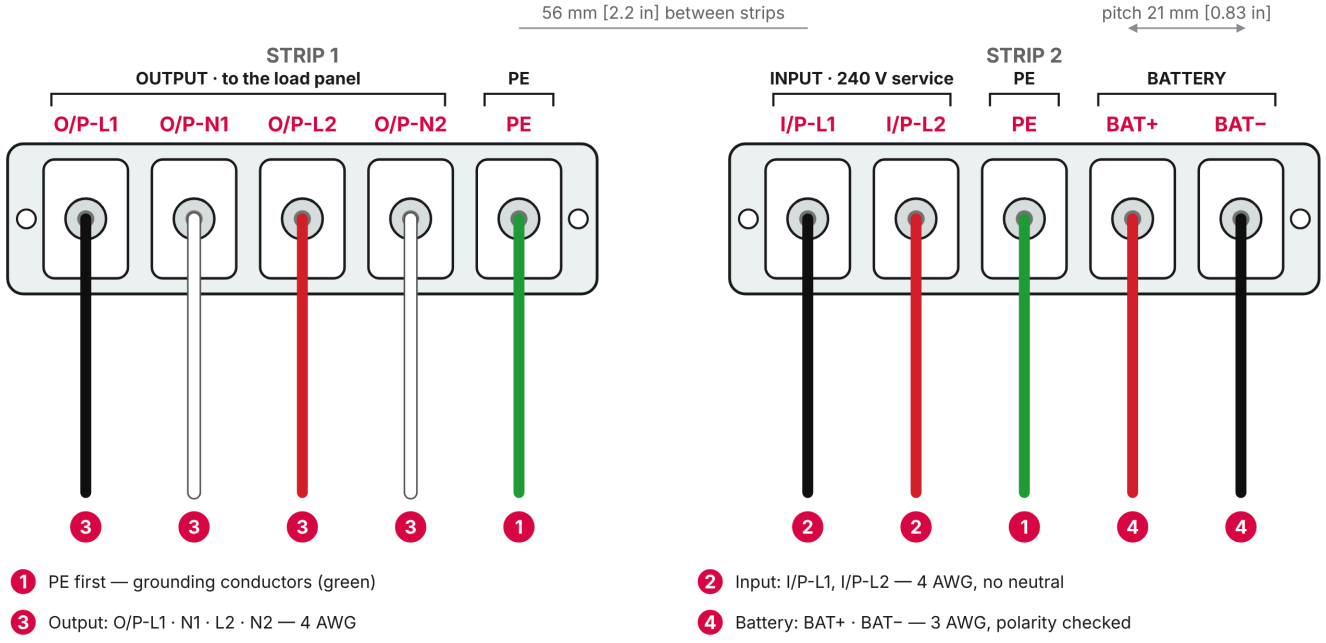

FIGURE 4-5 The two terminal strips, seen from the rear, with the order of connection (US wire colors shown as an example)

Figure 4-6 shows the two strips on the unit, with the cover removed, and Table 4-6 gives the stud, the torque and the wire sizes of each terminal.

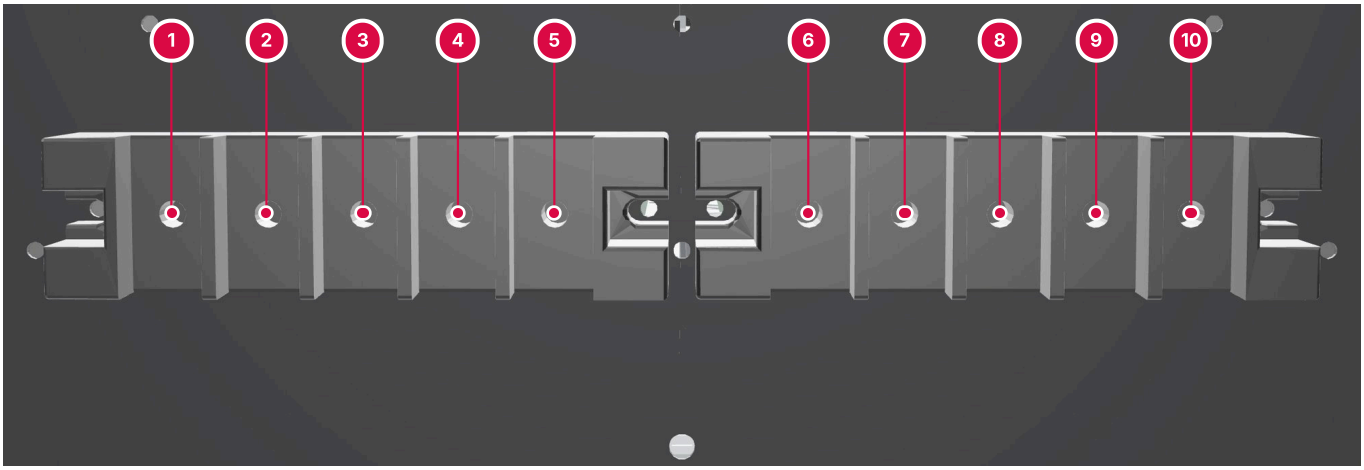

1. O/P-L1
2. O/P-N1
3. O/P-L2
4. O/P-N2
5. PE (strip 1, output)
6. I/P-L1
7. I/P-L2
8. PE (strip 2, input)
9. BAT+
10. BAT−

FIGURE 4-6 The two terminal strips, seen from the rear with the terminal cover removed (rendering from the factory 3D model, FERSP20000-40X9; the same strips on the EMPTY and the EXT)

TABLE 4-6 Power terminals, torque and wire sizes, FERRUS SP 20 kVA

No.	Terminal	Stud	Torque	Wire, min. (factory)	Wire, max. (NEC size)	Lug
1–4	O/P-L1 · O/P-N1 · O/P-L2 · O/P-N2	M6 stud	ask AEC	4 AWG (25 mm²)	2 AWG	Ring lug for M6, to fit the 0.83 in (21 mm) pitch; largest lug: ask AEC
5	PE, strip 1	M6 stud	ask AEC	As the largest phase conductor	As the largest phase conductor	Ring lug for M6
6 · 7	I/P-L1 · I/P-L2	M6 stud	ask AEC	4 AWG (25 mm²)	1 AWG — check the lug fit: ask AEC	Ring lug for M6, to fit the 0.83 in (21 mm) pitch; largest lug: ask AEC
8	PE, strip 2	M6 stud	ask AEC	As the largest phase conductor	As the largest phase conductor	Ring lug for M6
9 · 10	BAT+ · BAT−	M6 stud	ask AEC	3 AWG (35 mm²)	1/0 AWG — check the lug fit: ask AEC	Ring lug for M6, to fit the 0.83 in (21 mm) pitch; largest lug: ask AEC

Factory sizes from Table 4-4; NEC sizes from Table 4-5, for the conditions stated under it. Until AEC confirms the torque, tighten to the torque on the terminal label.

TABLE 4-7 Terminal height, by model

Model	Terminal center line above the floor	Above the cabinet base	Terminals off the rear panel	Terminal cover projects
40X9 · EMPTY	26.9 in (684 mm)	23.8 in (606 mm)	1.0 in (25 mm)	2.1 in (53 mm)
EXT	15.5 in (393 mm)	12.4 in (314 mm)	1.1 in (29 mm)	2.2 in (57 mm)

Heights from the floor include the casters.

TABLE 4-8 What to connect to each terminal

Strip	Terminal	Connect	Cable (factory)
1 · OUTPUT	O/P-L1 · O/P-N1	Load circuit 1, 120 V (leg 1 line and neutral)	4 AWG (25 mm²)
1 · OUTPUT	O/P-L2 · O/P-N2	Load circuit 2, 120 V (leg 2 line and neutral)	4 AWG (25 mm²)
1 · OUTPUT	O/P-L1 · O/P-N2	240 V loads, with the output jumpers of configuration 03 or 04 (Section 4.7)	4 AWG (25 mm²)
1 · PE	PE	Grounding conductor of the load circuits	As the largest phase conductor
2 · INPUT	I/P-L1 · I/P-L2	The two line conductors of the 120/240 V or 120/208 V service, 240 V or 208 V between them. No input neutral.	4 AWG (25 mm²)
2 · PE	PE	Equipment grounding conductor of the supply — connect it first	As the largest phase conductor
2 · BATTERY	BAT+ · BAT−	External battery cabinet: positive to BAT+, negative to BAT− (Section 5.3). Polarity checked with a voltmeter first.	3 AWG (35 mm²)

1. **Ground first.** Connect the grounding conductor of the supply to PE on strip 2, and the load grounding conductors to PE on strip 1, before any other wire.
2. **Input (strip 2).** The two line conductors of the service to I/P-L1 and I/P-L2.
3. **Output (strip 1).** O/P-L1, O/P-N1, O/P-L2, O/P-N2, wired and jumpered for the configuration you chose (Section 4.7).
4. **Battery (strip 2).** External cabinet only: BAT+ and BAT−, polarity checked (Section 5.3).
5. Tighten every terminal to the torque on the terminal label. Re-check the tightness after 24 hours of operation.

> ⚠ ***WARNING***
>
> Reversed battery polarity damages the UPS. Always check the polarity with a voltmeter before you close any battery breaker.

After wiring

- Check every connection and refit the terminal cover.
- Install an output circuit breaker between the UPS output and the loads.
- To connect loads: switch them off, connect them, then switch them on one at a time.

4.7 Output configurations

The isolation transformer has two 120 V windings: O/P-L1–O/P-N1 and O/P-L2–O/P-N2. Jumpers on the output strip set the output for the site. In a parallel system every unit uses the same configuration. Use jumpers of the same cross-section as the output conductors.

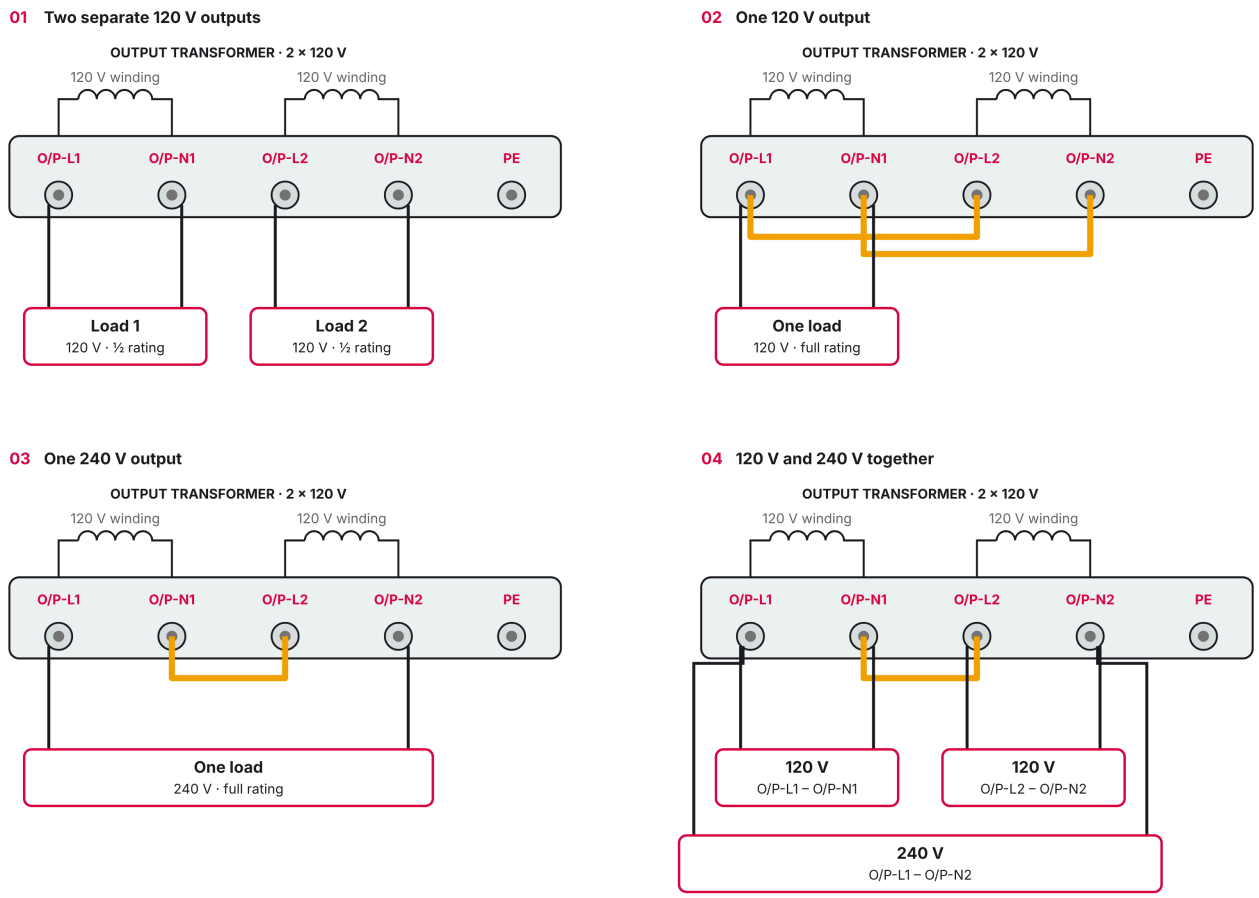

FIGURE 4-7 Output configurations: 01 two separate 120 V outputs (top left) · 02 one 120 V output (top right) · 03 one 240 V output (bottom left) · 04 120 V and 240 V together (bottom right). Jumpers in orange.

TABLE 4-9 Output configurations

No.	Output	Jumpers	Loads
01	Two separate 120 V	none	Load 1 on O/P-L1–O/P-N1, load 2 on O/P-L2–O/P-N2: half the rating each.
02	One 120 V	O/P-L1–O/P-L2 and O/P-N1–O/P-N2	One load on O/P-L1–O/P-N1: the full rating at 120 V.
03	One 240 V	O/P-N1–O/P-L2	One load across O/P-L1–O/P-N2: the full rating at 240 V.
04	120 V and 240 V together	O/P-N1–O/P-L2	120 V on O/P-L1–O/P-N1 and on O/P-L2–O/P-N2, 240 V on O/P-L1–O/P-N2. Split-phase 3-wire loads (180°): O/P-L1, O/P-N1 (= O/P-L2) as the neutral, and O/P-N2.

4.8 Batteries

- **40X9:** the 40 batteries are fitted and wired at the factory. Close BAT1 · BAT2 only at the first start (Section 6.3).
- **EMPTY:** fit the batteries before the first start (Section 5.2).
- **EXT:** connect the external battery cabinet (Section 5.3).

4.9 Parallel systems

With parallel cables, up to three FERRUS SP 20 kVA units can work in parallel for power sharing and N+1 redundancy.

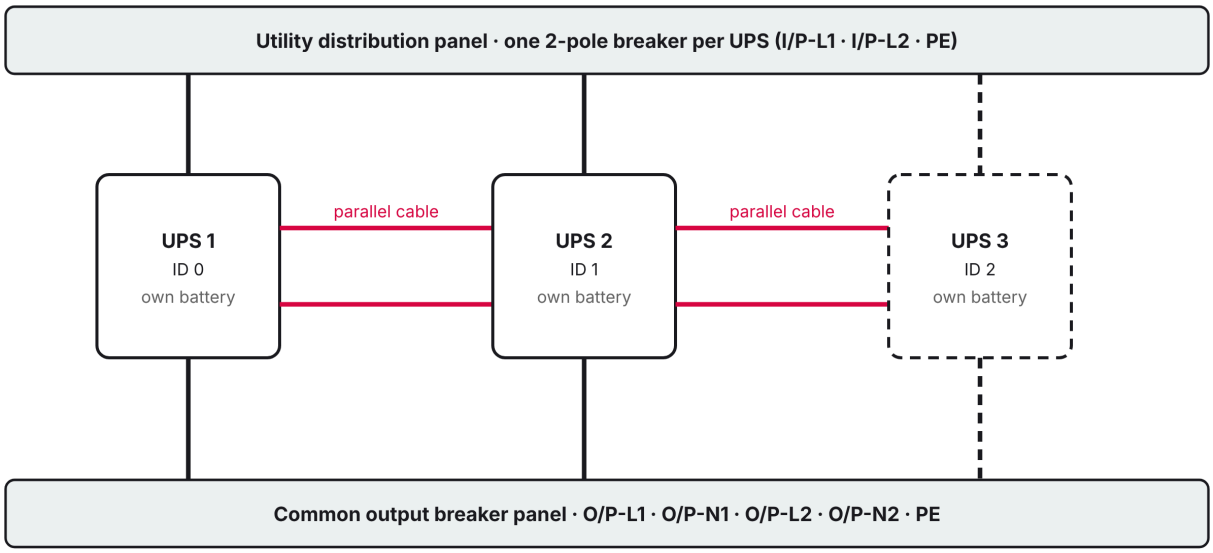

FIGURE 4-8 Parallel system, two or three units

1. Connect the parallel cables between the DB9 parallel ports of the units (Figure 2-7 item 2). Each cable no longer than 10 ft (3 m).
2. Wire the input of each UPS as for a single unit, each from its own breaker.
3. Connect the outputs of all UPS to a common output breaker panel, with breakers of suitable rating.
4. Give each UPS its own battery.
5. Use the same output configuration on every unit.
6. Set each unit on the touchscreen (Section 8.7).

- Up to 65 ft (20 m) from the breaker panel, the input and output cable lengths of the units must not differ by more than 20 %; beyond 65 ft, by more than 10 %.
- At start-up the units start one after the other in line mode, then transfer to the inverter together. At shutdown, when the last unit stops, all units transfer to bypass together.

4.10 Communication connections

Connect the monitoring, EPO and parallel cables before you start the UPS — see Chapter 8.

4.11 Installation checklist

- The UPS stands on its locked casters, with 20 in (500 mm) free on all sides and open vents.
- Ground connected first; input, output and battery tight; battery polarity checked.
- No neutral connected to the input; output jumpers set for the chosen configuration; output breaker installed.
- Battery breakers BAT1 · BAT2 (or the cabinet breaker) open until the first start; maintenance bypass switch on UPS.
- Communication, EPO and parallel cables connected.
- Terminal cover refitted.

05

CHAPTER 5

Batteries and runtime

The internal battery strings of the 40X9, fitting batteries in the EMPTY, connecting an external cabinet, the battery settings and the runtime.

5.1 Internal battery of the 40X9

FERSP20000-40X9 carries 40 × 12 V 9 Ah VRLA blocks inside, in two strings of 20 blocks (240 V DC each). Each string has its own 2-pole breaker on the rear panel, BAT1 and BAT2. After the breakers the two strings join on the battery terminals BAT+ · BAT− of strip 2, where a long-backup cabinet can also be connected.

Internal battery, FERSP20000-40X9 — two strings of 20 × 12 V 9 Ah (240 V DC each), in parallel

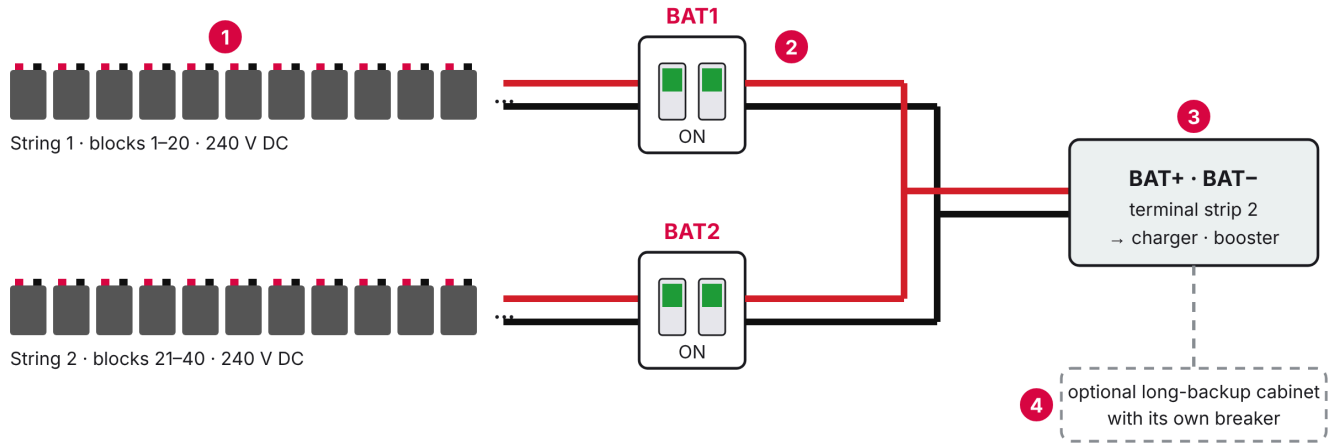

1. Two strings of 20 × 12 V 9 Ah, 240 V DC each
2. Battery breakers BAT1 · BAT2, rear panel (Figure 2-4 item 9)
3. BAT+ · BAT− on terminal strip 2, to the charger and booster
4. Optional long-backup cabinet, with its own breaker (Section 5.3)

FIGURE 5-1 Internal battery strings and breakers, FERSP20000-40X9 (also EMPTY once fitted)

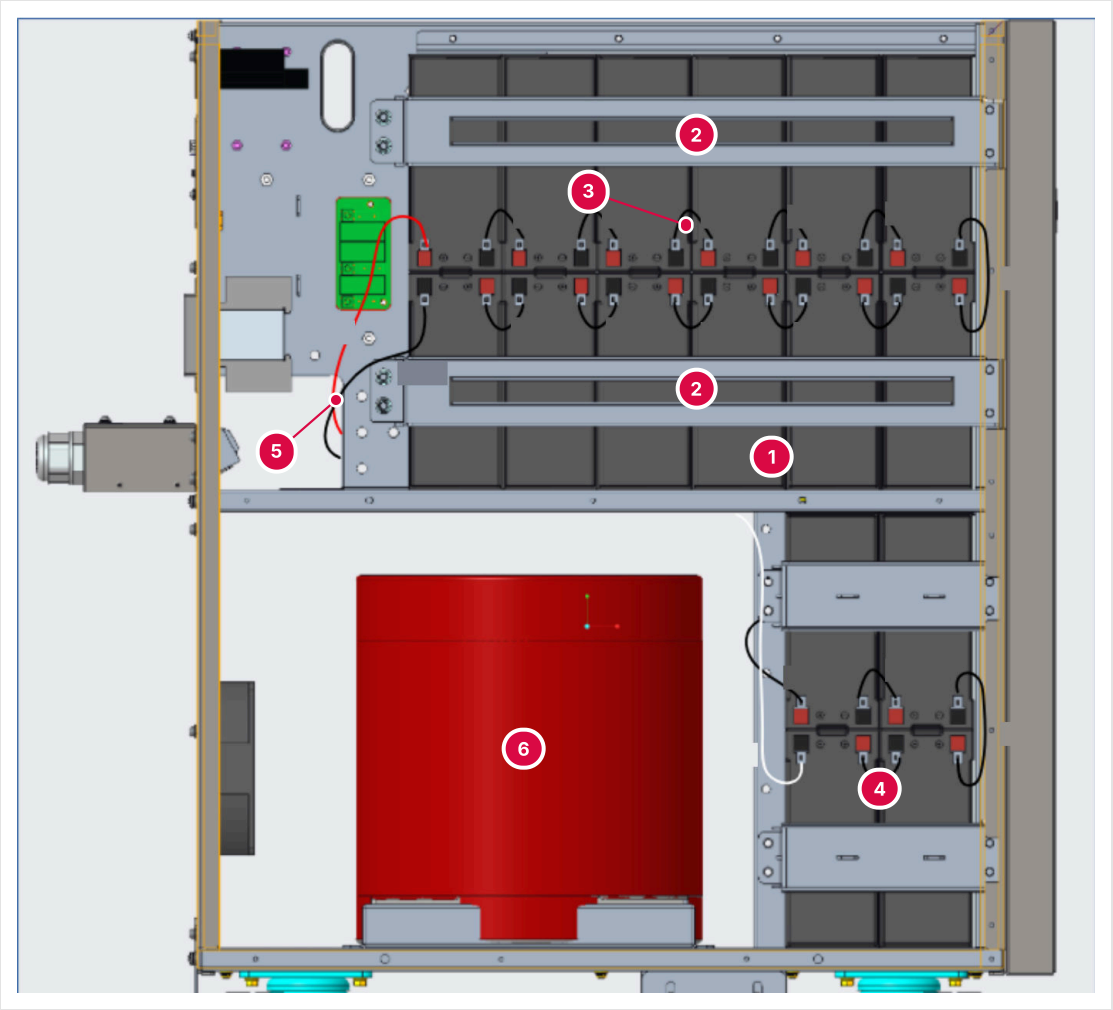

1. Upper battery shelf
2. Metal retaining bars
3. Block-to-block link cables
4. Lower battery shelf, beside the transformer
5. String cables to the battery breakers at the rear
6. Output isolation transformer

FIGURE 5-2 Battery compartment and cables, 40X9 (right side, side panel removed; rear on the left)

5.2 Fitting batteries in the EMPTY model

FERSP20000-EMPTY is the 40X9 cabinet with the battery compartment supplied empty. Qualified personnel fit the blocks on site.

⚠ CAUTION

Fit 40 blocks of one type, age and capacity only: 12 V 9 Ah VRLA, as in the 40X9. Check the polarity and the voltage of each string with a voltmeter before you close its breaker.

1. Keep BAT1 and BAT2 open and the UPS off (Figure 6-1, right).
2. Remove both side covers.
3. Remove the metal retaining bars (Figure 5-2 item 2).
4. Fit the blocks on the shelves, 20 per string.

5. Connect the block-to-block links one at a time, as in Figure 5-2, then the string cables (Figure 5-2 item 5). Take care when you connect the last cable of each string.
6. Measure each string with a voltmeter: 20 blocks in series, 240 V DC nominal, positive on the positive cable.
7. Refit the retaining bars and the side covers.
8. At the first start, enter the battery set-up in **Set › BATT Set** (Section 5.4) before you close BAT1 and BAT2.

5.3 Connecting an external battery cabinet

- **EXT:** an external cabinet is required. It must have its own DC breaker; the EXT has no battery breaker.
- **40X9 and EMPTY:** a long-backup cabinet can be added on BAT+ / BAT−, in parallel with the internal strings.

Connecting an external battery cabinet (240 V DC) to BAT+ · BAT−

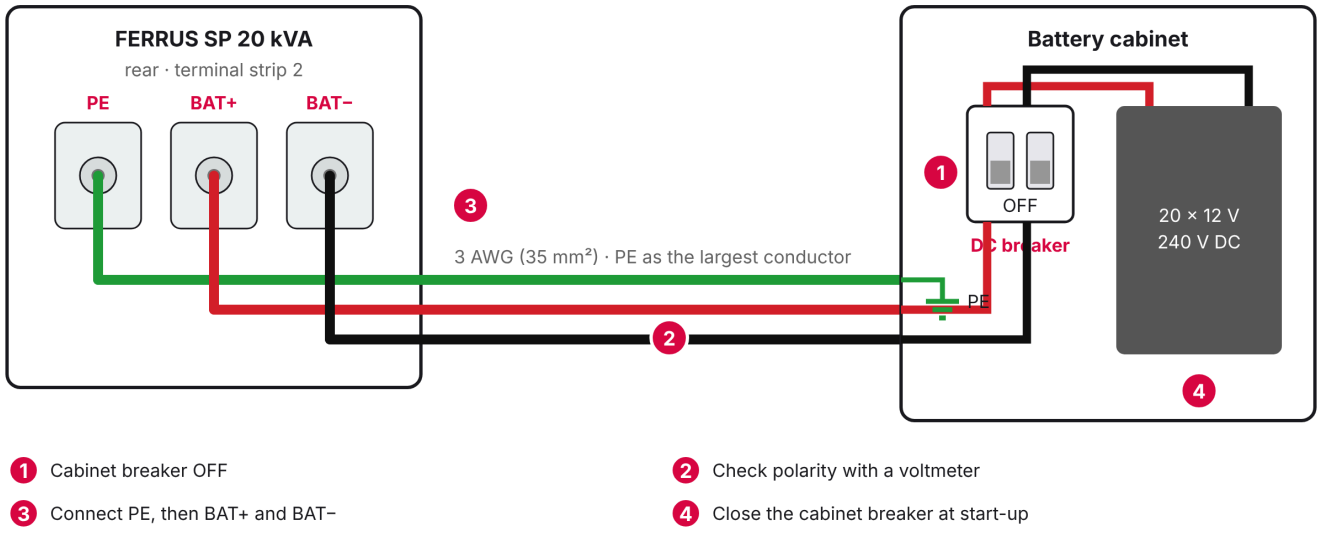

1. Cabinet breaker OFF
2. Check polarity with a voltmeter
3. Connect PE, then BAT+ and BAT−
4. Close the cabinet breaker at start-up

FIGURE 5-3 External battery cabinet on BAT+ · BAT− (all models)

1. Open the battery cabinet breaker. Open BAT1 · BAT2 on the 40X9 and EMPTY.
2. Check the polarity of the cabinet cable with a voltmeter.
3. Connect PE between the cabinet and the PE terminal of strip 2, then BAT+ to BAT+ and BAT− to BAT− (Figure 4-5).
4. Close the cabinet breaker at start-up (Section 6.3).

⚠ WARNING

Reversed battery polarity damages the UPS. The cabinet battery is 240 V DC: 20 blocks of 12 V in series per string.

5.4 Battery settings

Enter the battery set-up on the touchscreen (**Set › BATT Set**, engineer level) before the first start: the battery type, the number of blocks in series (10–20, 120–240 V DC), the capacity in Ah and the charge current.

⚠ CAUTION

The number of blocks set must equal the number installed in each string, or the batteries and the UPS can be damaged.

- The standard charge current is 1 A. With an external long-backup cabinet the charge current can be set from 1 to 8 A.
- With an external cabinet, keep the battery capacity above 24 Ah so that the charge current is not too high for the battery.

5.5 Runtime

TABLE 5-1 Backup time by load, FERSP20000-40X9 (minutes; new batteries, 77 °F)

Set-up	10 %	25 %	50 %	75 %	100 %
40 × 12 V 9 Ah inside	78	25	10	4.9	3

Calculated for general AGM VRLA 12 V 9 Ah blocks from the makers' constant-power discharge tables (77 °F (25 °C), end voltage 1.67 V per cell, 92 % efficiency on battery); where two makers' figures differ, the lower is printed. The EMPTY gives the same runtime with the same 40 blocks fitted. For the EXT and for longer runtimes, AEC sizes the external battery.

TABLE 5-2 Battery system

Item	Value
DC voltage	240 V DC (20 blocks of 12 V in series)
40X9	40 × 12 V 9 Ah VRLA, sealed, 2 strings of 20, breakers BAT1 · BAT2
EMPTY	Compartment for 40 × 12 V 9 Ah, 2 strings, breakers BAT1 · BAT2
EXT	External cabinet, 240 V DC, with its own breaker
Blocks in series	10–20, set on the touchscreen (120–240 V DC)
Battery current, max.	110 A
Charger	1 A standard; 1–8 A with a long-backup cabinet, set on the touchscreen
Battery cable	3 AWG (35 mm²), factory size

06

CHAPTER 6

Operation

The breaker and switch positions, starting, stopping and transferring the UPS, ECO mode, the battery test, the maintenance bypass and the EPO.

6.1 Before the first start

- The installation checklist is complete (Section 4.11).
- The loads are switched off.
- The maintenance bypass switch is on UPS.
- The battery set-up on the touchscreen matches the blocks installed (Section 5.4).

6.2 Breaker and switch positions

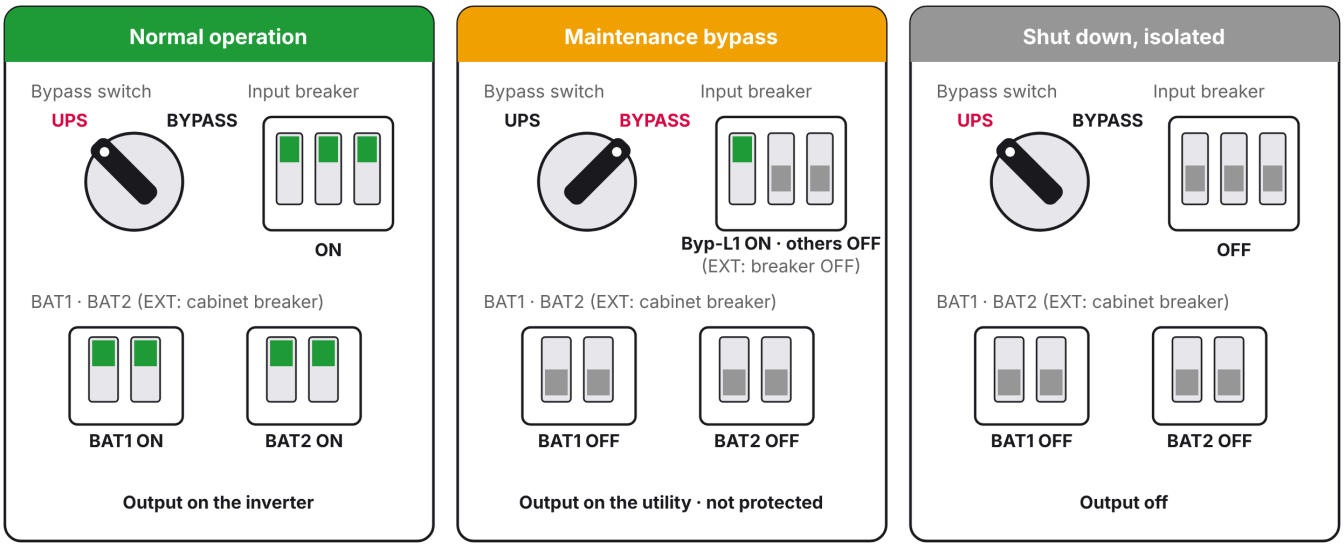

FIGURE 6-1 Positions of the maintenance bypass switch, the input breaker and the battery breakers

TABLE 6-1 Positions, by state

State	Maintenance bypass switch	Input breaker	BAT1 · BAT2 (EXT: cabinet breaker)	Output
Normal operation	UPS	ON	ON	On the inverter, protected
Maintenance bypass	BYPASS	40X9 · EMPTY: ON (see Section 6.12) · EXT: OFF	OFF	On the utility, not protected
Shut down, isolated	UPS	OFF	OFF	Off

6.3 Starting on utility power

1. Check that the maintenance bypass switch is on UPS (Figure 2-4 item 6).
2. Close the battery breakers BAT1 and BAT2 (Figure 2-4 item 9) — on the EXT, the external cabinet breaker. **EMPTY, first start after fitting the batteries:** leave BAT1 and BAT2 open for now and go to step 3.
3. Close the input breaker (Figure 2-4 item 7, Figure 2-6 item 7). The fans start and the touchscreen lights. **EMPTY, first start:** enter the battery set-up in **Set › BATT Set** (Section 5.4), then close BAT1 and BAT2.
4. The rectifier starts. After about one minute the UPS goes to line (normal) mode and INV lights.
5. Check the home page: power flow from the utility through rectifier and inverter to the load, no alarm.
6. Switch on the loads one at a time, the largest first.

6.4 Starting on battery (cold start)

1. Make sure the battery breakers BAT1 · BAT2 (EXT: the cabinet breaker) are ON.
2. Press the COLD START button on the rear panel once to power the display.
3. After the buzzer sounds, start the inverter: **Control › Function › ON/OFF Control**.
4. After a few seconds the UPS runs in battery mode.

6.5 Transferring to bypass and back

- **To bypass: Control › Function › Manual Bypass** (the bypass must be normal). BYP lights.
- **Back to the inverter: Control › Function › Manual Transfer to Inverter**, or **Ecs Manual Bypass** to cancel the manual bypass.

6.6 ECO mode

Set the system mode to ECO (engineer level, **Set**, page 2). With good utility power the load runs on the bypass: higher efficiency, but no protection from disturbances. When the utility leaves its window the inverter takes over. Set the mode back to normal for full online protection.

6.7 Battery test

1. Check that the bypass is normal and the battery fully charged.
2. Open **Control › Test** and select **Battery Test**: a short discharge tests the batteries. **Stop Test** ends it.
3. If the test fails, alarm 13 “Battery self-test failed” appears (Table 10-2).
4. **Battery Maintain** runs a deeper maintenance discharge; **Manual Float** and **Manual Boost** force the charge stage.

6.8 Everyday use

During a power outage

1. The UPS switches to battery with no break: the load keeps running, BAT lights and the buzzer beeps.
2. Silence the buzzer if you wish: touch the speaker icon on the screen.
3. Watch the battery: **Data › Battery** shows the capacity and the remaining time.
4. If the outage lasts, save work and shut the loads down in order, well before the battery is exhausted. With the SNMP-M card the servers can do this by themselves.

5. At the end of discharge the UPS switches its output off to protect the battery.

When the utility returns

The UPS restarts by itself and recharges the battery — unless "EOD restart inhibit" is set (alarm 26). A full recharge takes at least 12 hours: until then the runtime available is shorter.

Good habits

- Leave the UPS switched on all the time: it protects the load and keeps the battery charged.
- Switch new equipment on one at a time, and check the load reading afterwards.
- Look at the panel once a week: normal operation is INV alone lit, no alarm.
- Before a long shutdown (vacation, site closed) shut the UPS down completely (Section 6.11). Recharge it within 4 to 6 months.

6.9 What the panel tells you

TABLE 6-2 What you see, what it means, what to do

What you see	Meaning	What to do
INV lit; power flow green from utility through rectifier and inverter	Normal (line) mode	Nothing.
INV and BAT lit; battery block active; buzzer	Utility failure: on battery	See Section 6.8. Save work if the outage lasts.
BYP lit	Load on bypass — manual bypass, overload, over-temperature or a fault	Read **Data › Current Alarm**; remove the cause; return with **Manual Transfer to Inverter**.
BYP lit, ECO set	ECO mode, bypass good	Normal if ECO was chosen.
ALM lit	A fault or warning is present	Read **Data › Current Alarm** and Table 10-2; clear with **Fault Clear** once the cause is removed.
Mute lit	Buzzer silenced	A new alarm sounds again.
Alarm 39	Maintenance bypass switch on BYPASS	Normal during service; turn it back to UPS (Section 6.12).
Screen dark, no LEDs	No input and no battery, or the UPS is off	Check the breakers; start from the battery with COLD START (Section 6.4).
"Communication Abnormal" in the status bar	The screen is not receiving data from the UPS controller	Restart the UPS; if it stays, contact AEC service.

6.10 Silencing the alarm

Touch the speaker icon at the top right of the screen: the buzzer is muted and the Mute LED lights. A new alarm sounds again.

6.11 Shutting down

In normal mode

1. Switch off the loads.
2. Switch the inverter off: **Control › Function › ON/OFF Control**. The UPS transfers to bypass.
3. Open the input breaker, then the battery breakers BAT1 · BAT2 (EXT: the cabinet breaker), to switch the UPS off completely.

In battery mode

1. Switch the inverter off: **Control › Function › ON/OFF Control**.
2. The UPS goes to no-output mode: the display goes off and there is no output voltage.
3. Open the battery breakers.

6.12 Maintenance bypass

The maintenance bypass switch UPS / BYPASS (GSH2-115) is standard on all three models (Figure 2-4 item 6, Figure 2-6 item 6). It keeps the load on the utility while the UPS is serviced.

> ⚠ ***WARNING***
>
> In maintenance bypass the output terminals stay live, and so do the input terminals and parts of the UPS. The load is not protected from utility disturbances. Only qualified personnel may service the UPS.

To maintenance bypass

1. Transfer the UPS to bypass: **Control › Function › Manual Bypass**. Check that BYP lights.
2. Open the battery breakers BAT1 · BAT2 (EXT: the cabinet breaker).
3. Turn the maintenance bypass switch from UPS to BYPASS. Alarm 39 “Maintenance breaker closed” shows; the inverter cannot start.
4. EXT: open the input breaker. 40X9 and EMPTY: see the notice below.

> ***NOTICE***
>
> 40X9 and EMPTY: on the AEC single-line diagram AEC-FSP-20B-02 the maintenance bypass line is drawn after the Byp-L1 pole of the 3-pole input breaker. Until AEC confirms this, keep the input breaker closed while the load is on maintenance bypass, and call AEC service (+1 786 553 2100) before any work inside the UPS. On the drawing the maintenance bypass feeds the transformer primary, so the 120 V legs stay on in BYPASS (to be confirmed by AEC).

Back to the UPS

1. Close the input breaker if it was opened, and close the battery breakers. Wait until the UPS runs on its static bypass (BYP lit).
2. Turn the maintenance bypass switch from BYPASS to UPS. Alarm 39 clears.
3. Return to the inverter: **Control › Function › Manual Transfer to Inverter**. INV lights.

6.13 Emergency power off

Opening the EPO loop stops the output at once (Section 8.6). To restart, close the loop again, clear the alarm (**Control › Function › Fault Clear**) and start the inverter.

07

CHAPTER 7

Touchscreen

The AEC color touchscreen: home page, readings, alarms, settings and controls.

i NOTE Some screen pictures were taken from a display not connected to a UPS, so the readings are zero and "Communication Abnormal" is shown.

7.1 The touchscreen on the unit

The color touchscreen sits on the front of the UPS, with the status LEDs on its left and the power button on its right (Figure 2-3). Touch an icon to open a page. The arrows at the bottom of a page turn its sub-pages (1/2, 2/2); the curved arrow goes back.

7.2 Home page and main menu

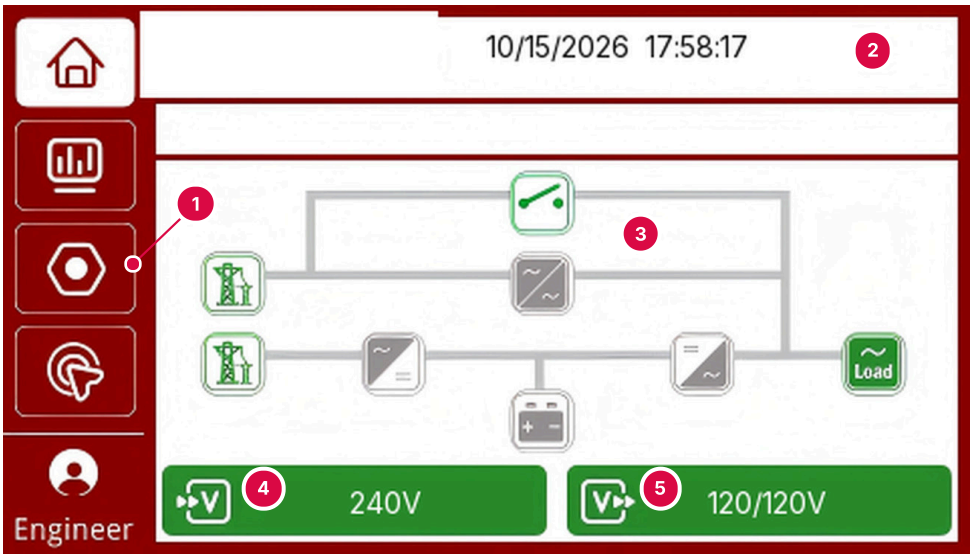

1. Side menu: Home, Data, Set, Control; user level at the bottom
2. Status bar: message, buzzer mute icon, date and time
3. Power flow: green active, grey not active
4. Input voltage, L1–L2
5. Output voltage of the two legs, L1 / L2

FIGURE 7-1 Home page

Two access levels: **User** reads the pages and mutes the buzzer; **Engineer** also changes the settings and runs the commands of Control. Touch the speaker icon in the status bar to mute the alarm.

7.3 Data (readings)

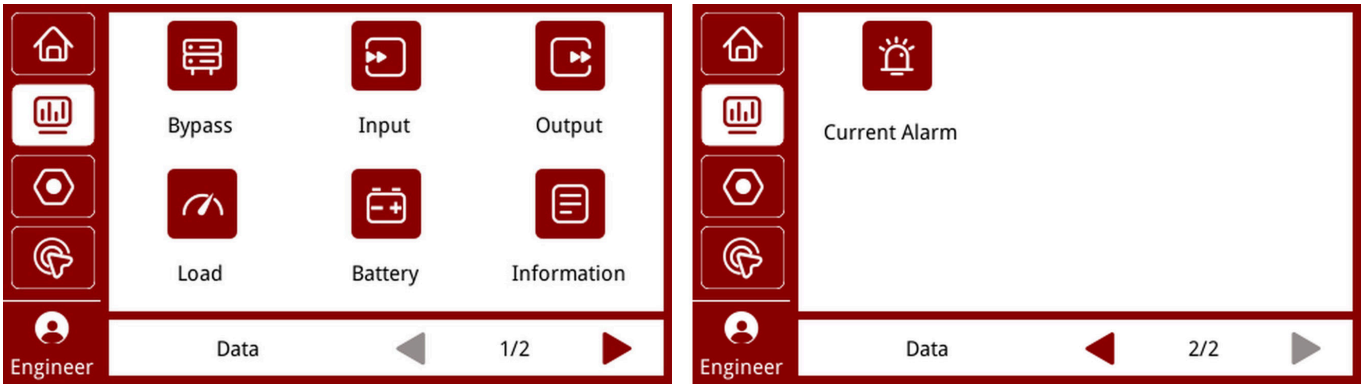

FIGURE 7-2 Data, page 1 (left) and page 2 — Current Alarm (right)

TABLE 7-1 Data pages

Page	Shows
Bypass	Bypass voltage (V), current (A), frequency (Hz) and power factor.
Input	Input voltage (V), current (A), frequency (Hz) and power factor.
Output	Output voltage and current of the two legs (L1/L2), frequency (Hz) and power factor.
Load	Apparent power (kVA) and active power (kW) of L1 and L2, total load (%) and load of each leg (%).
Battery	Battery voltage (V), current (A), capacity (%), remaining time (min), temperature (°C) and the number of batteries set.
Information	DC bus voltage, charger voltage and current, transformer temperature, rectifier and inverter IGBT temperatures.
Current Alarm	The alarms present now, with number, date and time (Table 10-2).

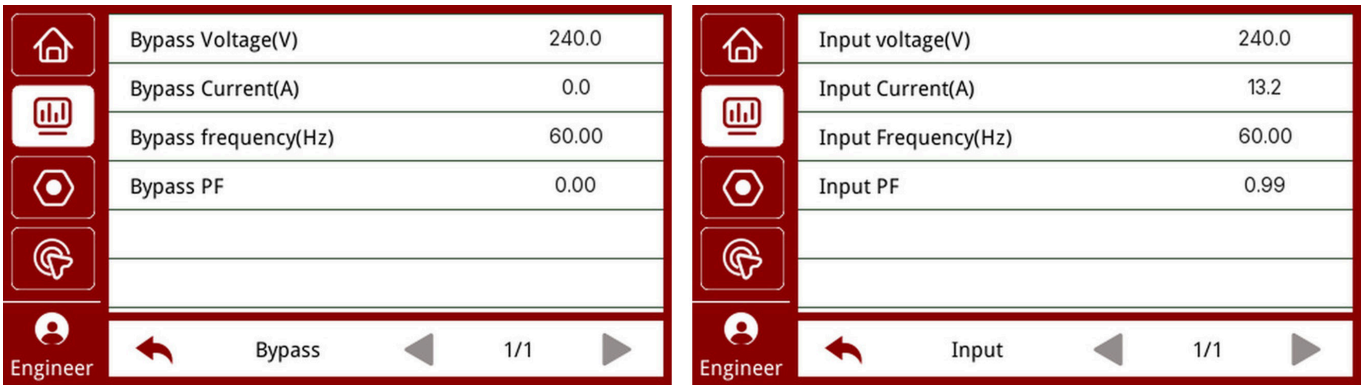

FIGURE 7-3 Data — Bypass (left) and Data — Input (right)

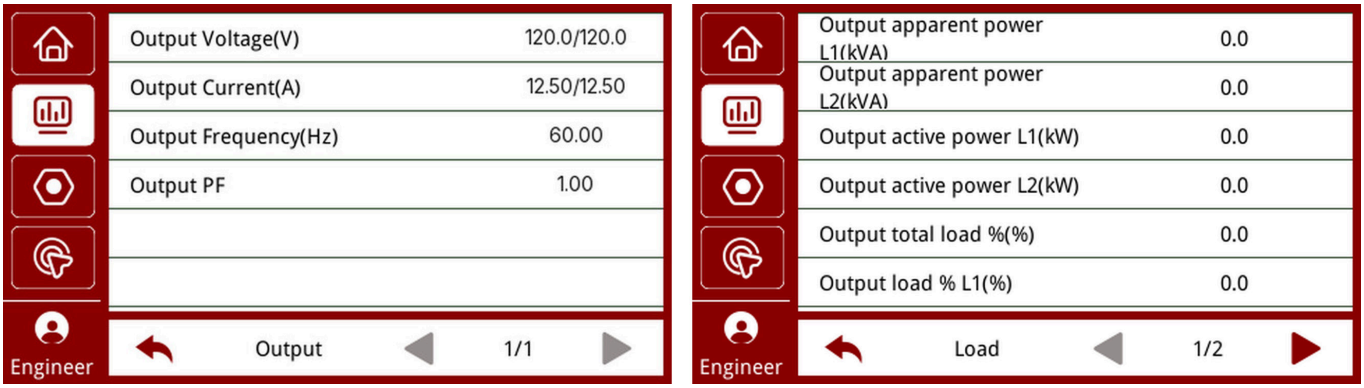

FIGURE 7-4 Data — Output (left) and Data — Load (right)

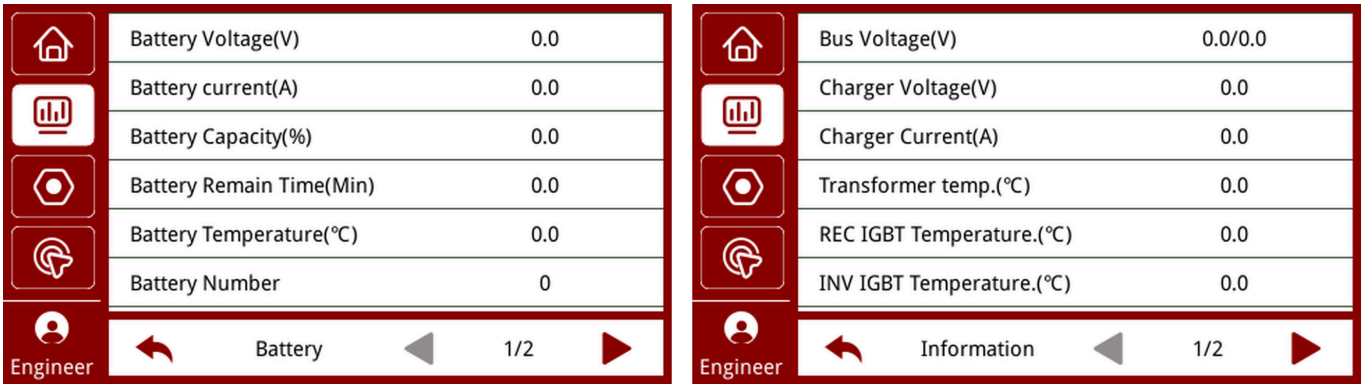

FIGURE 7-5 Data — Battery (left) and Data — Information (right)

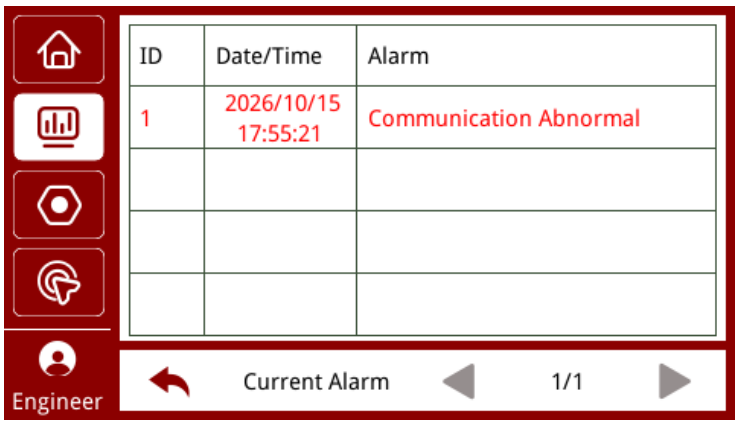

FIGURE 7-6 Data › Current Alarm: the alarms present, with date and time

7.4 Set (settings)

⚠ CAUTION

Settings change how the UPS works. Only qualified personnel, logged in as Engineer, may change them. The number of batteries set must equal the number installed, or the batteries and the UPS can be damaged.

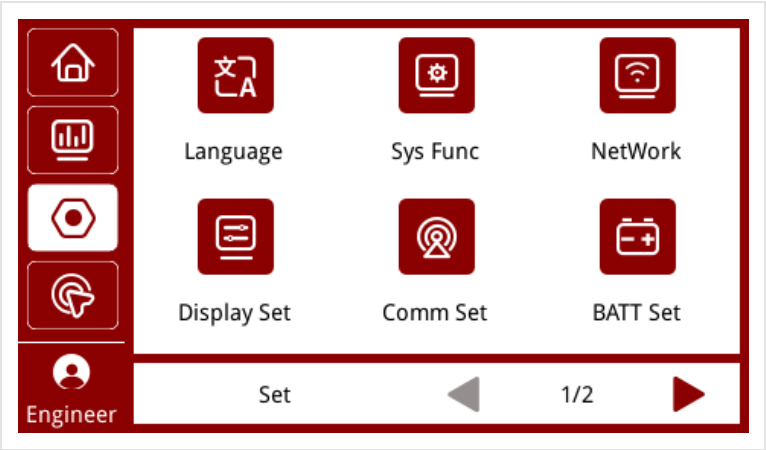

FIGURE 7-7 Set, page 1

TABLE 7-2 Set pages

Page	Settings
Language	Display language: English, Español, Русский and more (three pages).
Sys Func	Screen saver on/off and wait time (minutes), date and time; software version and serial number.
NetWork	Static or DHCP; IP address (192.168.60.100 as shipped), subnet mask (255.255.255.0), default gateway (192.168.60.1).
Display Set	Protocol type, display orientation (horizontal), screen buttons.
Comm Set	RS232 device address, mode (ASCII), baud rate (9600) and protocol (MODBUS); the address of the USB link (three pages).
BATT Set	Battery type, number of blocks, capacity (Ah), charge current and charge voltages (Section 5.4).
Set, page 2	The system settings — Sys Set (single, parallel or ECO mode), Rate Set (rated voltage and frequency) and the dry contacts — engineer level, at commissioning.

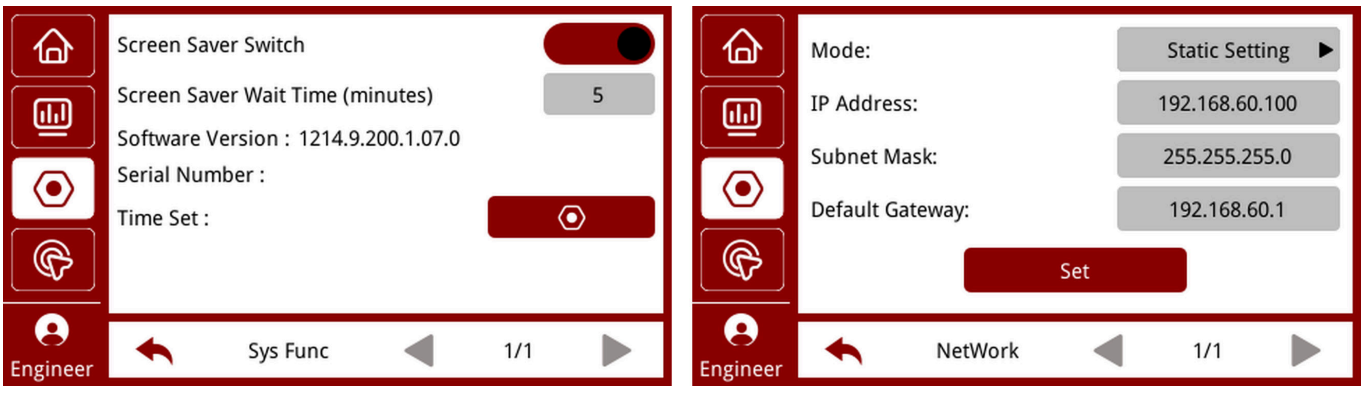

FIGURE 7-8 Sys Func (left) and NetWork (right)

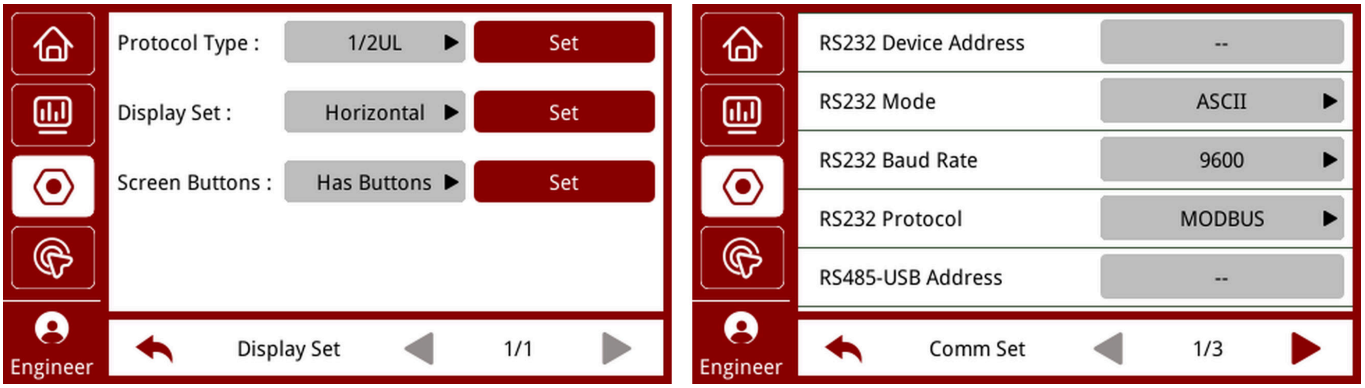

FIGURE 7-9 Display Set (left) and Comm Set, page 1 (right)

7.5 Control

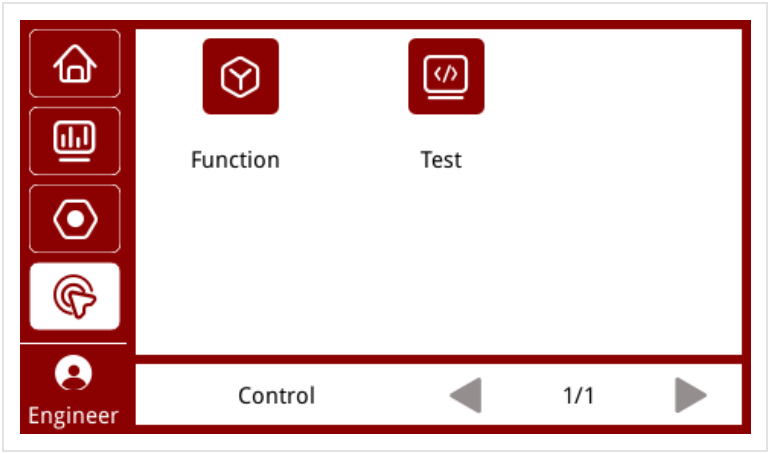

FIGURE 7-10 Control

TABLE 7-3 Control pages

Page	Commands
Function	Manual Transfer to Inverter · Manual Bypass (the bypass must be normal) · Ecs Manual Bypass · Fault Clear · Clear Battery History Data · Reset Dust Filter; the inverter ON/OFF Control on page 2.
Test	Battery Test · Battery Maintain (bypass normal and battery charged) · Manual Float · Manual Boost · Stop Test.

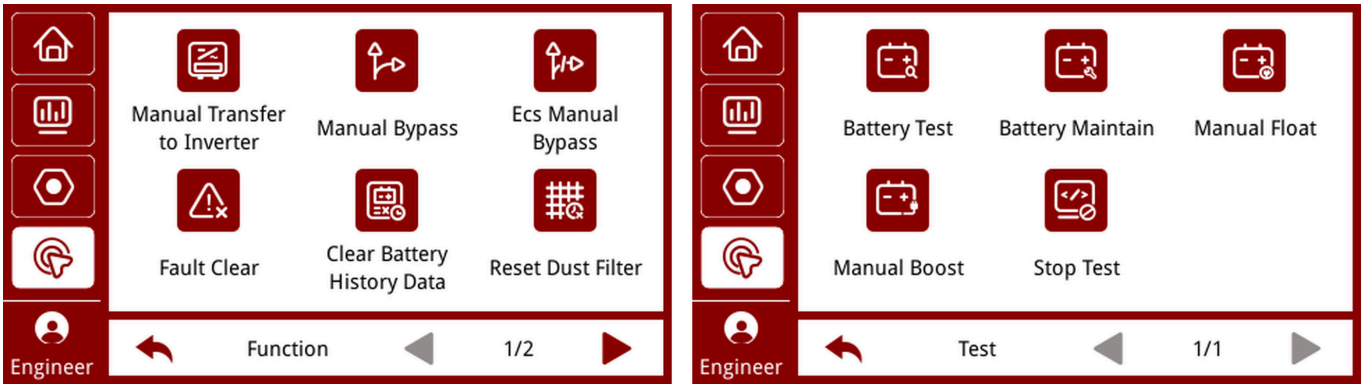

FIGURE 7-11 Control — Function (left) and Control — Test (right)

CHAPTER 8

08 Communication and monitoring

The ports, the SNMP-M and dry-contact cards, UPS View, the intelligent slot pins, the EPO and the parallel setting.

8.1 Communication ports

The ports are on the rear panel, top right (Figure 2-7). There is no RS485 port on the FERRUS SP 20 kVA.

TABLE 8-1 Communication ports

Port	Use
RS232	DB9, for monitoring software (protocol, baud rate and address in **Set › Comm Set**).
USB	Monitoring software.
Intelligent slots	Two: SNMP-M card and dry-contact card at once.
EPO	Normally closed loop: opening it stops the output.
Parallel ports	Two, DB9, for the parallel cables.
Network (touchscreen)	IP settings in **Set › NetWork** (192.168.60.100 as shipped).

8.2 SNMP-M network card

Web pages, SNMP v1/v2c/v3, Modbus TCP/IP and MQTT: the UPS status and alarms on the network, and orderly shutdown of servers on a utility failure. Fit the card in an intelligent slot with the UPS off.

1. Fit the card in the intelligent slot and connect it to the network with an RJ45 cable. The green PWR LED lights.
2. On a PC in the same network, run IPSearch (AEC app › Support › Downloads › SNMP › SNMP-M). It lists the card with its IP and MAC address.
3. Select the card › NetWork set › Static IP: enter a free IP address, the subnet mask and the gateway (ask your IT department), or choose Obtain IP for DHCP. Press Set.
4. Press Web page (or type the card's IP in a browser) and log in as admin.
5. In the card's UPS settings choose protocol Megtec, port Uart · Port A, baud rate 2400, address 1. The yellow DATA LED stops flashing when the card reads the UPS.
6. Set up e-mail alarms and, if used, SNMP traps (port 162) or Modbus TCP.

TABLE 8-2 SNMP-M card indicators

LED	State	Meaning
PWR (green)	On · Off	Card powered · not powered
SYS (red)	Off · Flashing · On	System normal · general alarm · serious alarm
DATA (yellow)	Off · Flashing	Communication with the UPS normal · abnormal

⚠ CAUTION

The card's default web accounts (admin, full rights; user, view only) and their passwords are given by AEC technical service. Change both passwords at the first login.

8.3 UPS View software

UPS View (UPSView version 2.0.7) monitors and sets up one UPS from a Windows PC through a direct cable, without the network card. Download UPSView_V2.0.7.rar from the AEC app (Support › Downloads › SNMP › SNMP-M), unpack it and run the program inside: no installation is needed.

TABLE 8-3 Connecting UPS View

Connection	How
RS232	A serial cable from the UPS's RS232 port to the PC's COM port (pin 2 TXD, pin 3 RXD, pin 5 GND); a USB-to-serial adapter on PCs without a COM port.
USB	A standard USB cable to the UPS's USB port; some PCs need a driver.

1. Connect the cable to the UPS's RS232 or USB port (Figure 2-7).
2. Start UPSView. Choose the equipment type **1/1(6-20kVA)**, Modbus mode ASCII or RTU and the baud rate as set on the UPS (**Set › Comm Set**: MODBUS, ASCII, 9600 as shipped), address 1.
3. Choose the PC's COM port (Windows Device Manager › Ports).
4. UPSView shows the live data, the status, the alarms and the settings of the UPS.

i NOTE UPS View talks Modbus. The RS232 port does not answer while the UPS protocol is set to Megatec (MEGA): keep MODBUS in **Set › Comm Set**. "Megtec" is only the SNMP-M card's protocol setting (Section 8.2).

NOTICE

The RS232 port and the intelligent slot share the same communication line: use UPS View with the SNMP-M card removed, or monitor through the card — not both at the same time.

✓ TIP The AEC UPS View Monitor User Manual (AEC-UM-UPSV-US) describes every UPS View page; the SNMP-M User Manual describes the card's web interface. Both are in the AEC app, Support › Downloads › SNMP › SNMP-M.

8.4 Dry-contact card

Signals as voltage levels from the card's 12–24 V DC supply — UPS fault, warning, bypass, battery low, normal mode, utility fault — and a remote shutdown input.

8.5 Intelligent slot

The intelligent slot takes a DB9 or a terminal-block (Phoenix) connector with the same pin assignment.

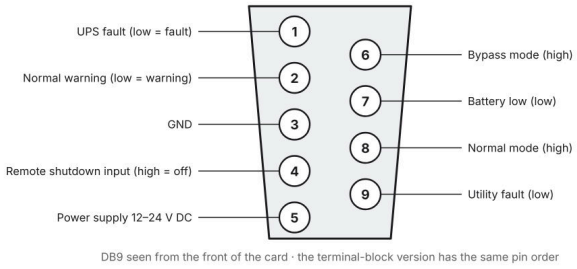

FIGURE 8-1 Intelligent slot connector — pin layout

TABLE 8-4 Intelligent slot pins

Pin	Function	Description
1	UPS fault	Low level indicates a UPS fault.
2	Normal warning	Low level indicates an abnormal condition.
3	GND	—
4	Remote shutdown	With utility normal, cuts the rectifier and inverter output; in battery mode switches the whole system off. High level turns the unit off.
5	Power supply	12–24 V DC.
6	Bypass mode	High level: the UPS is on bypass.
7	Battery low	Low level: battery voltage low.
8	Normal mode	High level: the UPS is in normal mode.
9	Utility fault	Low level: utility failure.

8.6 Emergency power off (EPO)

EPO switches the UPS off quickly in an emergency through a customer contact. Wire a normally closed switch to the EPO terminal on the rear panel (Figure 2-7 item 4). Opening it activates the EPO.

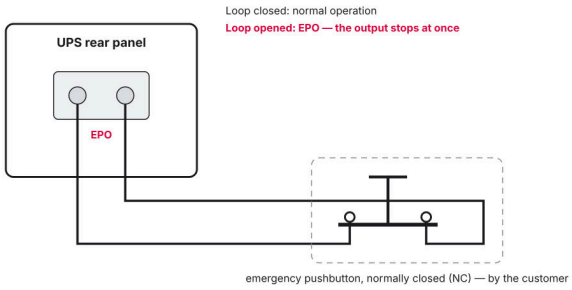

FIGURE 8-2 EPO wiring, normally closed loop

8.7 Parallel setting

1. In the system settings (**Set**, page 2) set System Mode to Parallel. For two units set the number of units to 2; for three, 3.
2. Give each unit its own ID from 0 to n−1 (n = number of units). Each unit needs a unique ID.
3. Set every UPS of the parallel system with the same settings but its own ID, then power up the system.

CHAPTER 9

09 Maintenance

Routine checks, battery care and replacement, component life, storage and transport.

9.1 Maintenance schedule

TABLE 9-1 Maintenance schedule

Interval	Task
Monthly	Check the home page: line mode, no alarm in **Data › Current Alarm**; the load below the rating.
Every 6 months	Check that the vents are clear and the fans run; clean the outside with a dry cloth. Run a battery test (Section 6.7).
Yearly	Qualified personnel: check the tightness of the terminals and the condition of the batteries; read the alarm list in **Data › Current Alarm**.
3–5 years	Replace the batteries as a full set, same type and number.
After service	**Control › Function › Reset Dust Filter** resets the dust-filter timer.

9.2 Battery care

- Operate at 59–77 °F (15–25 °C) for rated battery life.
- Charge for at least 12 hours before first use and after a long discharge.
- Recharge a UPS that is not used every 4 to 6 months.
- Open the battery breakers BAT1 · BAT2 (EXT: the cabinet breaker) before you open any cover.

9.3 Component life

Some components wear with time and heat. Planned replacement, before they fail, keeps the UPS available.

TABLE 9-2 Typical service life at 77 °F (25 °C)

Component	Typical life	Action
Cooling fans	5–7 years	Replace when worn or at the end of the period; a failed fan raises an alarm.
DC bus electrolytic capacitors	7–10 years	Replaced by AEC service.
AC filter capacitors	5–7 years	Replaced by AEC service.
VRLA batteries (5-year design life)	3–5 years	Replace as a full set (Section 9.5).

Life is shorter at higher temperature, in dusty rooms and under continuous heavy load. The figures are typical of the industry for online UPS; AEC service plans the replacement during preventive maintenance.

9.4 Battery life and temperature

VRLA batteries age faster in heat. As a rule of thumb, their service life roughly halves for every 18 °F (10 °C) above 77 °F (25 °C).

TABLE 9-3 Typical effect of temperature on VRLA battery life

Average room temperature	Relative life	Typical life
68–77 °F (20–25 °C)	100 %	3–5 years
86 °F (30 °C)	about 70 %	2–3.5 years
95 °F (35 °C)	about 50 %	1.5–2.5 years
104 °F (40 °C)	about 35 %	1–1.7 years

Signs that the batteries need replacing

- The runtime is clearly shorter than in Table 5-1 with a fully charged battery.
- The battery test fails (alarm 13).
- A block is swollen, cracked or leaking — switch the UPS off and contact AEC service.
- The batteries are older than 3–5 years.

9.5 Replacing the internal batteries

40X9, and EMPTY once fitted. On the EXT the batteries are in the external cabinet: follow the cabinet's instructions.

1. Transfer the UPS to maintenance bypass (Section 6.12), or shut it down completely (Section 6.11).
2. Check that BAT1 and BAT2 are open.
3. Remove both side covers.
4. Disconnect the battery cables one at a time.
5. Remove the metal retaining bars (Figure 5-2 item 2).
6. Replace the batteries one at a time, all with blocks of the same type and age.
7. Refit the retaining bars and reconnect the cables one at a time. Take care when you connect the last cable of each string.
8. Check each string with a voltmeter (Section 5.2 step 6).
9. Refit the covers, close BAT1 and BAT2 and return the UPS to the inverter.

9.6 Battery handling and disposal

⚠ WARNING

- Batteries carry hazardous voltage and current. Only qualified personnel who know batteries may replace them.
- Remove jewelry, watches and other metal objects. Wear rubber gloves and boots; use tools with insulated handles.
- Replace connection cables only with original parts from AEC.
- Do not dispose of batteries in fire: they can explode. Do not open or damage them: the electrolyte is toxic.
- Never short the battery terminals.
- The battery circuit is not isolated from the utility input: check that there is no voltage between the battery terminals and ground before you touch them.
- Even with the input breaker open, the internal circuits stay connected to the batteries.
- Recycle used batteries according to local regulations.

9.7 Storage and transport

- Store indoors, dry, at 32–158 °F (0–70 °C); the batteries last longest stored at 59–77 °F (15–25 °C).
- Recharge a stored UPS every 4 to 6 months.
- Transport upright, in the original packaging.

9.8 Cooling

- Forced air, from front to rear. On the 40X9 and EMPTY the transformer fans exhaust at the rear; on the EXT they sit behind the front grille.
- Keep 20 in (500 mm) free in front of and behind the tower; do not block any vent.
- Do not install with the rear against a wall or with the exhaust into another unit's intake.
- Size the room cooling for the UPS losses at full load (efficiency up to 93 %).

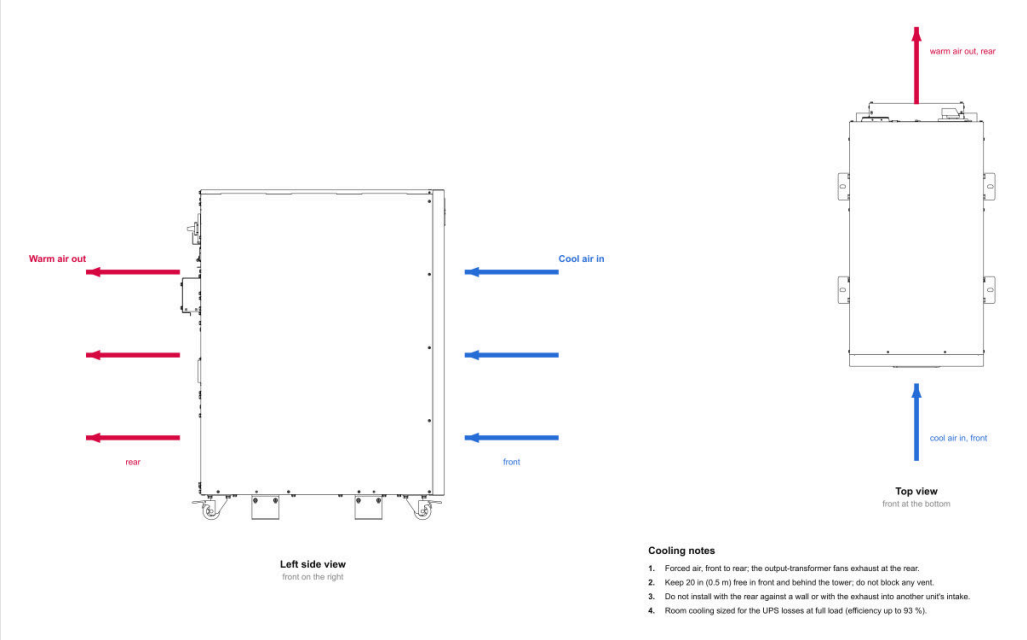

FIGURE 9-1 Cooling, 40X9 · EMPTY (AEC-FSP-20B-07)

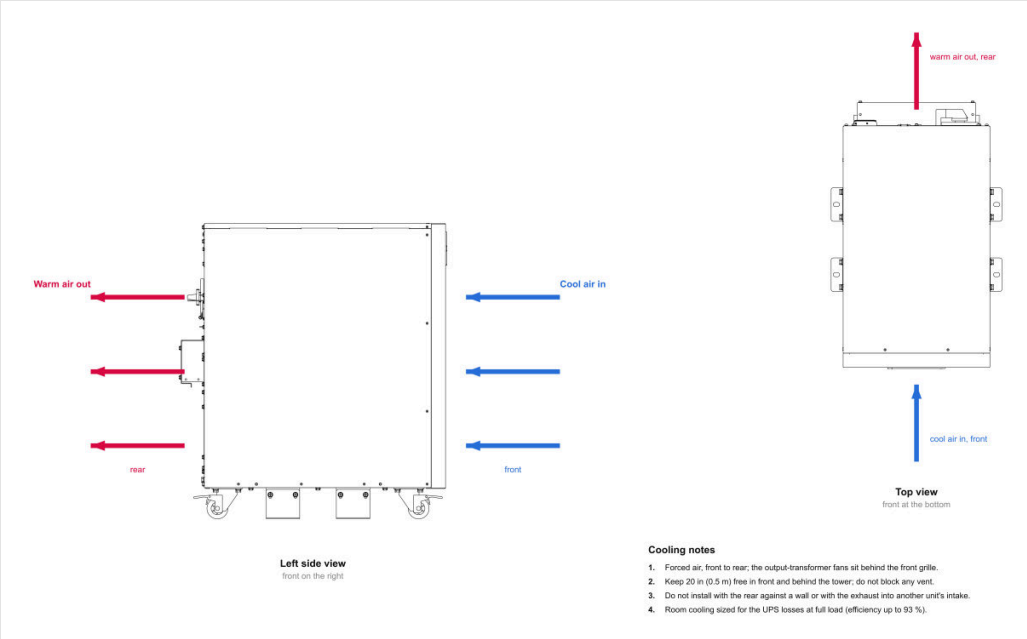

FIGURE 9-2 Cooling, EXT (AEC-FSP-20E-07)

CHAPTER 10

10 Troubleshooting

What the UPS shows, the common symptoms, the alarm list and what to tell AEC service.

✓ TIP **AEC technical support — 24/7.** WhatsApp and phone +1 786 553 2100, always available · e-mail service.us@aecups.com. Send the model, the serial number and a photo of the display and of the alarm: it is the fastest way to a solution.

10.1 Reading an alarm

When the UPS sounds an alarm, ALM lights. Open **Data › Current Alarm** to see it, and **Control › Function › Fault Clear** to clear a fault once the cause is removed. If the alarm persists, see Table 10-2.

TABLE 10-1 Common symptoms

Symptom	What to do
The screen stays dark	Check the input breaker and the utility supply; on battery, press COLD START (Section 6.4).
The UPS runs on battery with utility present	Check the input voltage (176–275 V L1–L2) and the input breaker; see alarm 4.
The load is on bypass	Read the alarm: overload (reduce the load), over-temperature (check vents and fans), a manual bypass, or the maintenance bypass switch on BYPASS (alarm 39).
Short runtime	Charge for 12 hours, run a battery test; replace old batteries. Check that BAT1 and BAT2 are both closed.
Alarm 1 “Battery not connected”	Check BAT1 · BAT2 (EXT: the cabinet breaker), the battery cables and their polarity. EMPTY: check that the batteries are fitted.
No network access	Check **Set › NetWork** and the SNMP-M card.
The building breaker trips when the UPS starts	The input breaker or conductors are smaller than the NEC sizing for 125 A requires; check the wiring (Section 4.5).
Wrong output voltage (120 V instead of 240 V or the reverse)	Check the output jumpers (Section 4.7) and the rated values in **Set › Rate Set** (Table 7-2).
One leg overloaded, the other lightly loaded	Move 120 V loads to the lighter leg (Section 3.4).
Parallel units do not share the load	Check the parallel cables (alarm 35) and that each unit has its own ID and the same settings (Section 8.7).

10.2 Alarm list

TABLE 10-2 Alarms

No.	Alarm	Cause and action
1	Battery not connected	Check that the battery cables are connected correctly, the battery breakers (BAT1 · BAT2 or the cabinet breaker) are closed, and the batteries are not damaged.

No.	Alarm	Cause and action
2	Emergency power off (EPO)	Check that the EPO contact is closed correctly, or whether the EPO was operated.
3	Inverter under-rated	The hardware is not configured for the selected rated power.
4	Input fault	Check that the utility input voltage and frequency are in range and the input and upstream breakers are closed. Restore the utility supply, or the output stops when the battery reaches end of discharge.
5	Bypass phase sequence reversed	Check whether the bypass input is phase-reversed.
6	Bypass abnormal	Bypass voltage or frequency out of the set range: check the utility supply and the input breaker.
7	Bypass fault	Bypass SCR open or shorted: contact AEC service.
8	Bypass overload	Reduce the load below 95 % of the rating.
9	Bypass overload timeout	The bypass overload lasted too long: the output has been switched off.
10	Hourly transfer limit reached	5 transfers in 1 hour: check the utility supply and the load.
11	Output short circuit	Faulty load or output breaker. Find and switch off the faulty load, check the breaker, then clear the fault to restart.
12	Battery end of discharge	The battery is discharged after a utility failure.
13	Battery self-test failed	Check for active alarms; check that the battery can supply more than 20 s.
14	Rectifier fault	DC bus over/undervoltage, short circuit or IGBT open. Clear the fault; if it persists, contact AEC service.
15	Inverter fault	Inverter voltage abnormal or IGBT open. Clear the fault; if it persists, contact AEC service.
16	Rectifier over-temperature	Heatsink too hot or sensor disconnected: check fans, ventilation, sensor wiring and room temperature.
17	Fan failure	One or more fans faulty or blocked: check each fan.
18	Overload	Inverter overloaded: remove non-critical loads, or the UPS transfers to bypass.
19	Inverter overload timeout	The UPS has transferred to bypass; if the bypass is also overloaded the output stops. Reduce the load: the UPS returns to the inverter.
20	Inverter over-temperature	Heatsink too hot or sensor disconnected: check fans, ventilation, sensor wiring and room temperature.
21	Low battery voltage	Battery capacity low while on battery.
22	Input neutral disconnected	Not used on the FERRUS SP 20 kVA, which has no input neutral. If it appears, contact AEC service.
23	Bypass fan failure	One or more fans faulty or blocked: check each fan.
24	Manual shutdown	Inverter switched off or transferred to bypass by hand.
25	Battery or charger fault	No charger output: contact AEC service.
26	EOD restart inhibit	Automatic restart after end of discharge is inhibited.
27	Input overcurrent timeout	Input current above the limit for too long: the UPS goes to battery or bypass. Check the input voltage, the load and whether the source (transformer, generator) is too small; contact AEC service if needed.
31	System power supply disabled	No output available.

No.	Alarm	Cause and action
32	Relay open circuit	Inverter relay open.
33	Relay short circuit	Inverter relay shorted.
34	Inverter protection	Inverter output voltage out of range or DC bus overvoltage.
35	Parallel cable fault	One or more parallel cables disconnected.
36	Synchronization signal lost	Contact AEC service.
37	Current-sharing failure	Contact AEC service.
38	Input current imbalance	Contact AEC service.
39	Maintenance breaker closed	The maintenance bypass switch is on BYPASS: the UPS has transferred to bypass and the inverter cannot start (Section 6.12).
40	Bypass over synchronization	Bypass outside the synchronization range.
41	Battery self-test in progress	The battery is being tested.
42	Battery maintenance in progress	The battery is being maintained.
43	Battery maintenance failed	Check for other alarms and that the battery capacity supports more than 20 s of discharge.
44	Manual bypass	The UPS was transferred to bypass by hand.
45	Battery reverse connection	Battery polarity reversed: open the battery breakers and call AEC service.
46	Scheduled shutdown	Automatic shutdown at the set time.
47	BMS communication failure	Check the BMS communication wiring and that the BMS protocol matches the UPS.
48	Output transformer over-temperature	Check the room temperature, the fans and the load; contact AEC service.

i NOTE When you call AEC service, have ready the model and serial number (**Set › Sys Func**), the alarms shown in **Data › Current Alarm**, the load and the battery set-up.

11

CHAPTER 11

Specifications

Electrical, mechanical and environmental data of the three models.

TABLE 11-1 FERRUS SP 20 kVA specifications

Item	40X9	EMPTY	EXT
Ordering code	FERSP20000-40X9	FERSP20000-EMPTY	FERSP20000-EXT
Power (VA / W)	20,000 / 20,000	20,000 / 20,000	20,000 / 20,000
Input			
Connection	I/P-L1 · I/P-L2 · PE, two lines of the 120/240 V or 120/208 V service, no neutral	same	same
Voltage	176–275 V AC L1–L2 at full load, 240 V or 208 V nominal	same	same
Frequency	40–70 Hz	same	same
Power factor	> 0.99 at full load	same	same
Current, max.	125 A	125 A	125 A
Input breaker	3-pole 125 A (Byp-L1 · Mains-L1 · I/P-L2)	3-pole 125 A	2-pole 125 A (L1 · L2)
Output			
Voltage	120/240 V split phase from the isolation transformer; rated leg voltage settable to 110 / 115 / 120 / 127 V	same	same
Current per 120 V leg	84 A (90 / 86 / 84 / 80 A at 110 / 115 / 120 / 127 V)	same	same
Frequency	60 Hz (50 Hz as a setting), 0.1 % of nominal	same	same
Regulation	1 %	same	same
THD · crest factor	< 2.5 % at full linear load · 3 : 1	same	same
Overload	110 % 10 min · 130 % 1 min · 150 % 30 s, then bypass; at 150 % output off after 1 min	same	same
Efficiency, up to	93 %	93 %	93 %
Connection	Terminal strip, no receptacles	same	same
Battery			
Configuration	40 × 12 V 9 Ah inside, 2 strings	Compartment for 40 × 12 V 9 Ah, supplied empty	External cabinet
Battery breakers	BAT1 · BAT2	BAT1 · BAT2	In the external cabinet
DC voltage	240 V DC	240 V DC	240 V DC
Battery current, max.	110 A	110 A	110 A
Backup at 50 % · 100 %	10 min · 3 min	As 40X9 once fitted	Depends on the cabinet
Terminals			

Item	40X9	EMPTY	EXT
Type	M6 studs for ring lugs, pitch 0.83 in (21 mm), two strips	same	same
Center line above the floor	26.9 in (684 mm)	26.9 in (684 mm)	15.5 in (393 mm)
General			
Maintenance bypass	UPS / BYPASS switch, standard	standard	standard
Communication	RS232 · USB · 2 intelligent slots (SNMP-M and dry contacts) · EPO · 2 parallel ports	same	same
Parallel	Up to 3 units, N+1	same	same
W × D × H (body, height with casters)	15.8 × 28.7 × 38.7 in (401 × 729 × 983 mm)	15.8 × 28.7 × 38.7 in (401 × 729 × 983 mm)	13.8 × 22.7 × 27.8 in (351 × 575 × 707 mm)
Overall W × D	18.4 × 31.0 in (467 × 787 mm)	18.4 × 31.0 in (467 × 787 mm)	16.0 × 25.1 in (407 × 637 mm)
Weight	452 lb (205 kg)	218.3 lb (99 kg)	209.4 lb (95 kg)
Environment	32–104 °F (0–40 °C) · RH < 95 % non-condensing · 3,300 ft (1,000 m) at full power · 20 in (500 mm) clear on all sides	same	same
Storage	32–158 °F (0–70 °C)	same	same
Standards	UL 1778 standard; FCC Part 15, Class A	same	same
Warranty	3 years on the UPS · 2 years on VRLA batteries	3 years on the UPS	3 years on the UPS

Specifications are subject to change without notice.

TABLE 11-2 Output derating with altitude

Altitude (ft)	3,280	4,920	6,560	8,200	9,840	11,480	13,120	14,760	16,400
Altitude (m)	1,000	1,500	2,000	2,500	3,000	3,500	4,000	4,500	5,000
Output power	100 %	95 %	91 %	86 %	82 %	78 %	74 %	70 %	67 %

A

APPENDIX A

Ordering codes and accessories

The 20 kVA models and their accessories.

TABLE A-1 FERRUS SP 20 kVA ordering codes

Code	Description
FERSP20000-40X9	FERRUS SP 20 kVA split-phase online UPS, tower, 40 × 12 V 9 Ah inside
FERSP20000-EMPTY	FERRUS SP 20 kVA, the same tower with the battery compartment supplied empty
FERSP20000-EXT	FERRUS SP 20 kVA, smaller tower for an external battery cabinet, no battery inside
SNMP-M	SNMP-M network card: web pages, SNMP v1/v2c/v3, Modbus TCP/IP and MQTT
DRYCNT	Dry-contact card: status signals and a remote shutdown input

External battery cabinets for the EXT and for long backup: ask AEC.

APPENDIX B

B Warranty

What the warranty covers.

TABLE B-1 Warranty

Item	Coverage
FERRUS SP 20 kVA UPS	3 years
VRLA batteries	2 years

During the warranty AEC repairs or replaces a faulty product. Keep the purchase invoice. Not covered: transport damage, incorrect installation or use, use outside the conditions of this manual, repairs by anyone not authorized by AEC, and natural events. The sales contract prevails.

C

APPENDIX C

Acronyms and abbreviations

Terms used in this manual.

TABLE C-1 Acronyms

Term	Meaning
BMS	Battery management system
DHCP	Dynamic Host Configuration Protocol
ECO	Economy (energy-saving) operating mode
EMI / RFI	Electromagnetic / radio-frequency interference
EOD	End of discharge
EPO	Emergency power off
I/P · O/P	Input · output (terminal markings)
IGBT	Insulated-gate bipolar transistor
NEC	National Electrical Code (NFPA 70)
PE	Protective earth: the equipment grounding conductor
PFC	Power-factor correction
SCR	Silicon-controlled rectifier
TVSS	Transient voltage surge suppression
UPS	Uninterruptible power supply
VRLA	Valve-regulated lead-acid (battery)

D

APPENDIX D

AEC drawings

The AEC drawings of the two 20 kVA cabinets: AEC-FSP-20B for the 40X9 and the EMPTY, AEC-FSP-20E for the EXT (Rev. A, 2026-10-20). Dimensions in mm [in]; heights from the floor, casters included.

D.1 40X9 and EMPTY — AEC-FSP-20B

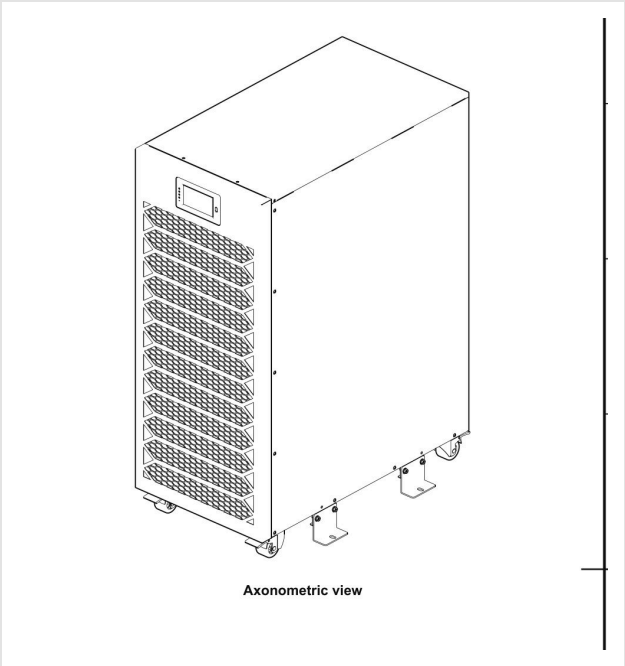

FIGURE D-1 FERRUS SP 20 kVA 40X9 · EMPTY, axonometric view (AEC-FSP-20B-03)

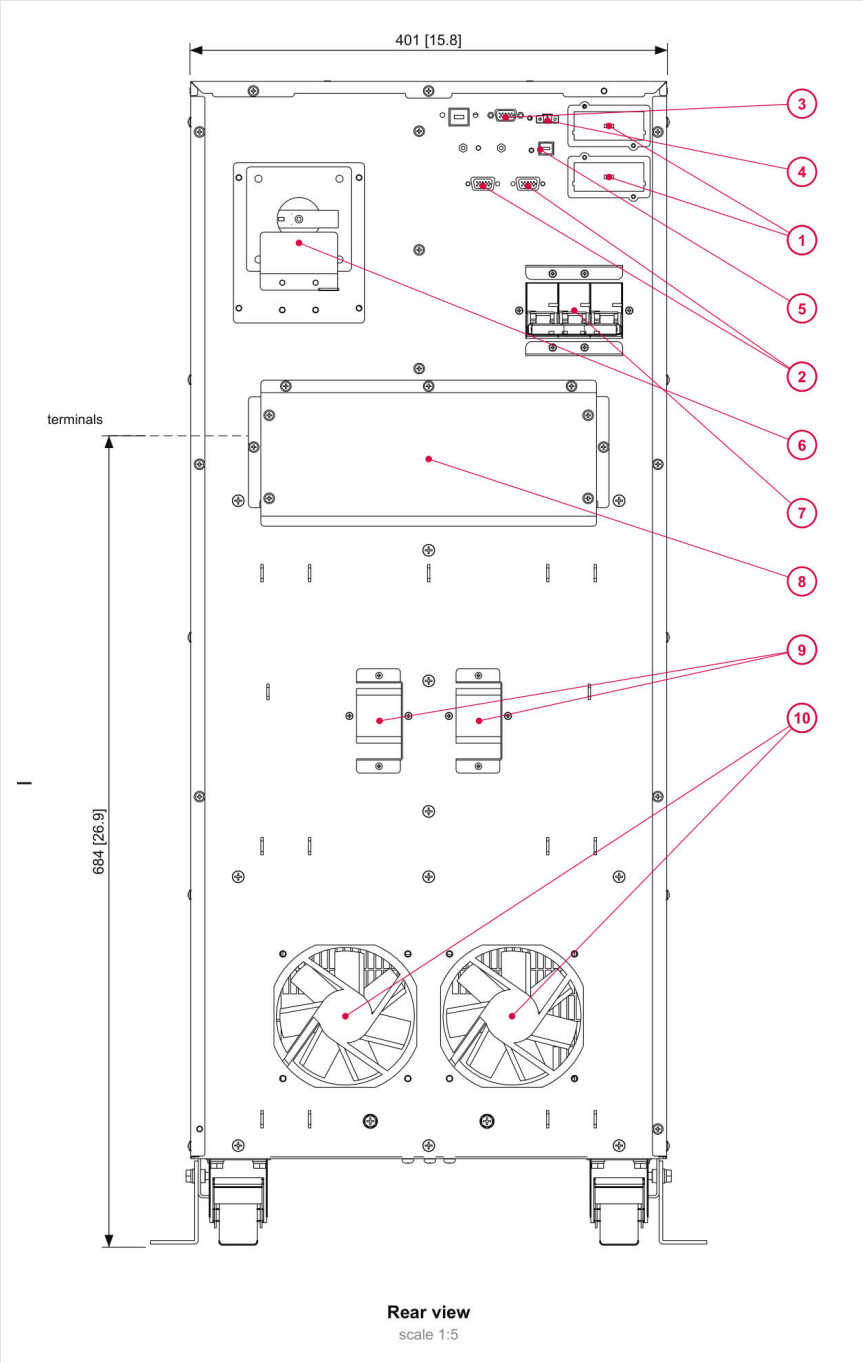

FIGURE D-2 Rear panel and connections, numbered parts as in Table 2-5 (AEC-FSP-20B-04). The terminal cover projects 53 [2.1] from the rear panel.

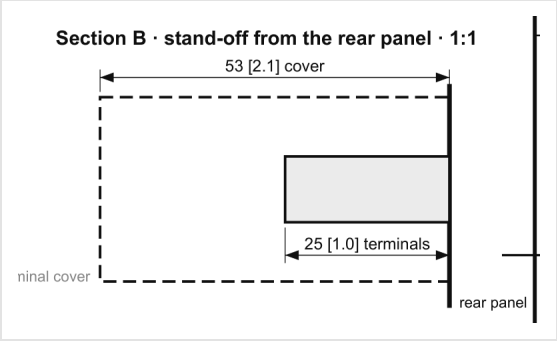

FIGURE D-3 Stand-off from the rear panel: terminals 25 [1.0], cover 53 [2.1] (AEC-FSP-20B-05, section B)

D.2 EXT — AEC-FSP-20E

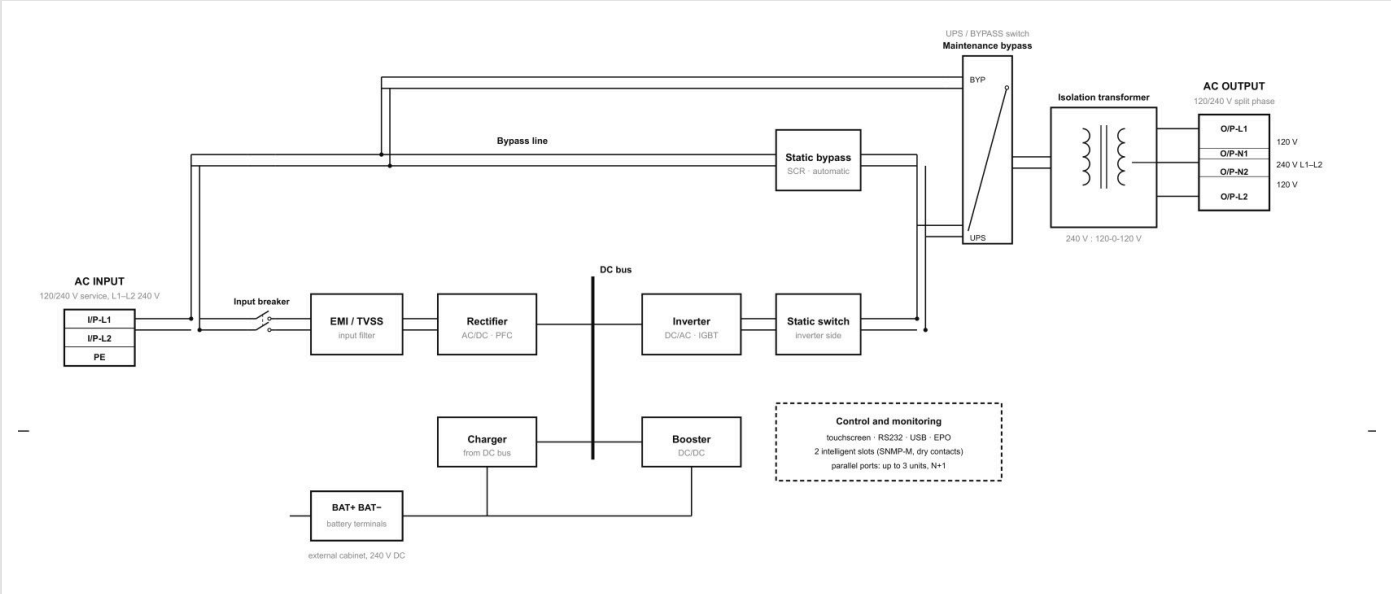

FIGURE D-4 Single-line diagram, FERSP20000-EXT: 2-pole input breaker, external battery cabinet on BAT+ / BAT– (AEC-FSP-20E-02)

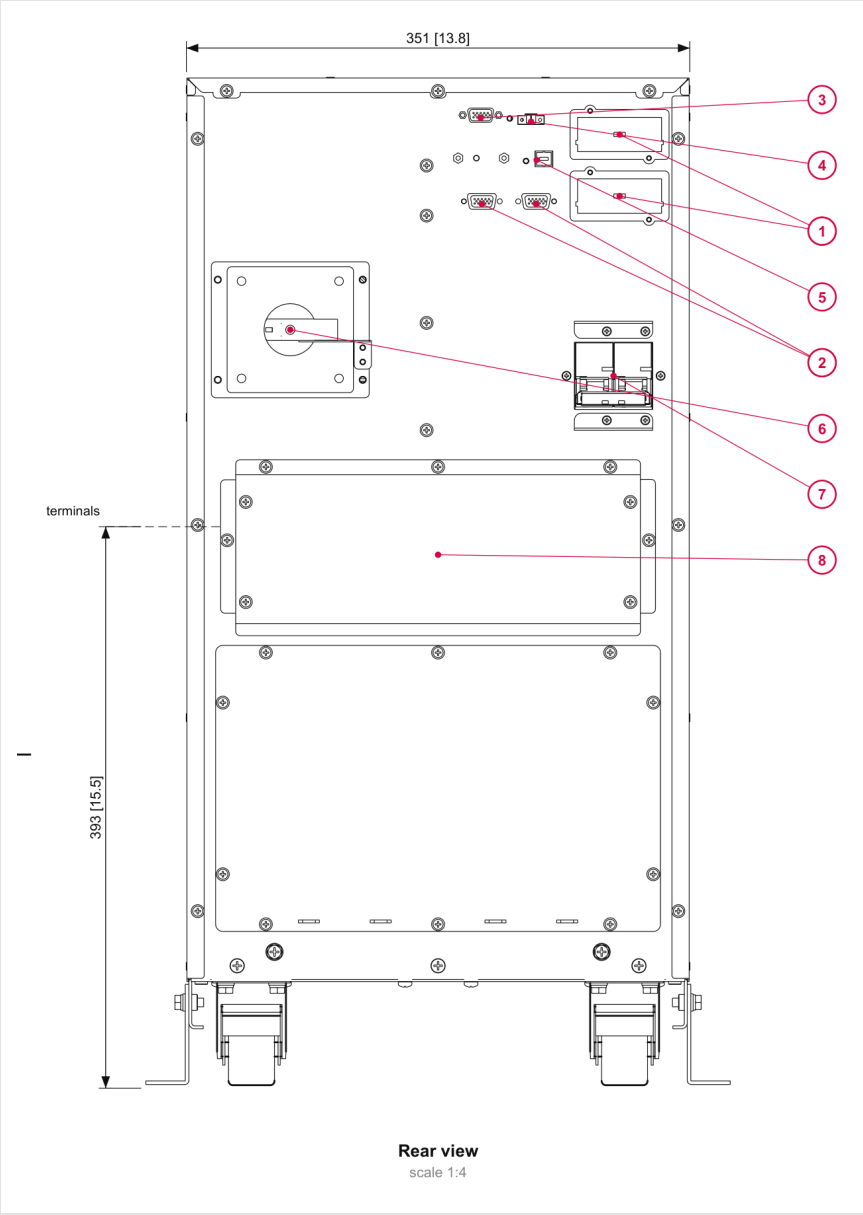

FIGURE D-5 Rear panel and connections, numbered parts as in Table 2-6 (AEC-FSP-20E-04). The terminal cover projects 57 [2.2] from the rear panel.

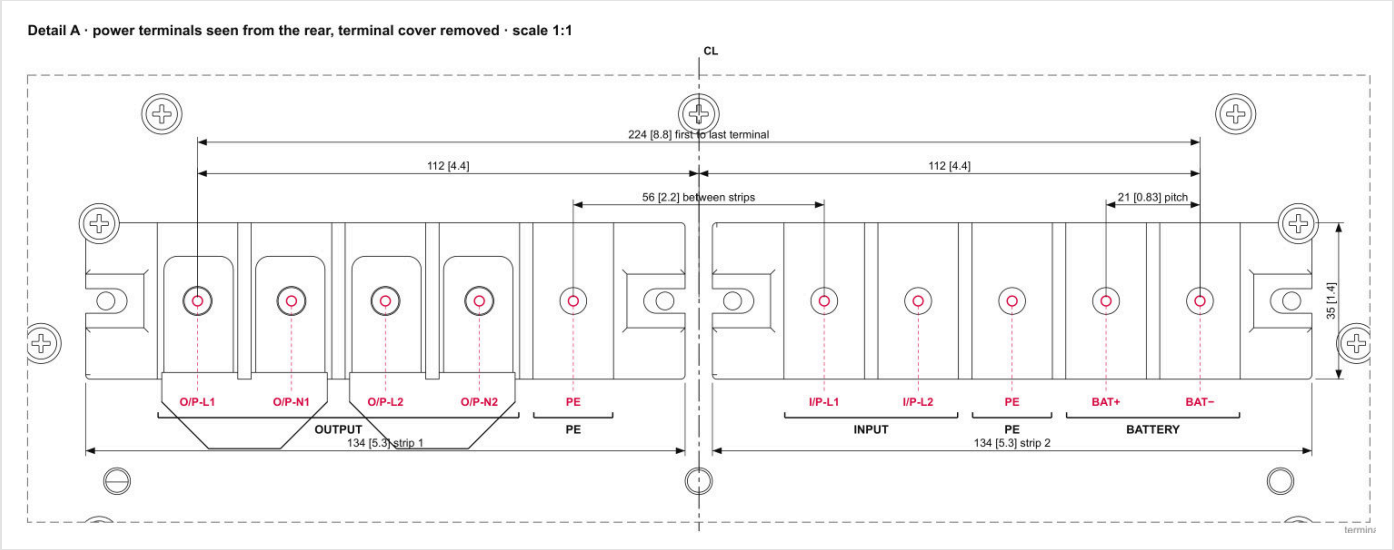

FIGURE D-6 Power terminals of the EXT, center line 393 [15.5] above the floor (AEC-FSP-20E-05, detail A)

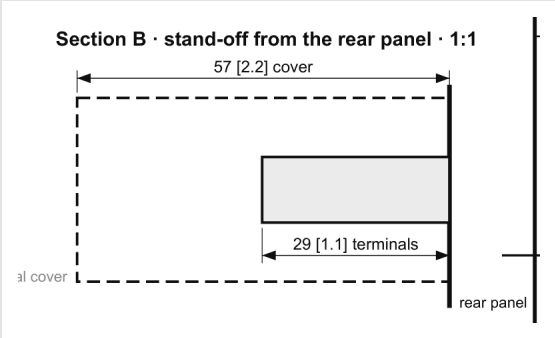

FIGURE D-7 Stand-off from the rear panel: terminals 29 [1.1], cover 57 [2.2] (AEC-FSP-20E-05, section B)

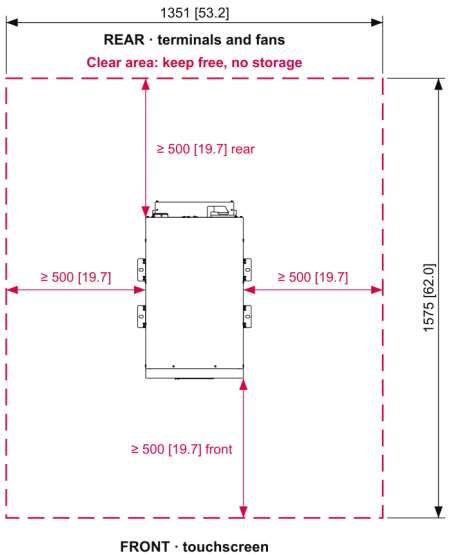

Installation plan, clearances
scale 1:20

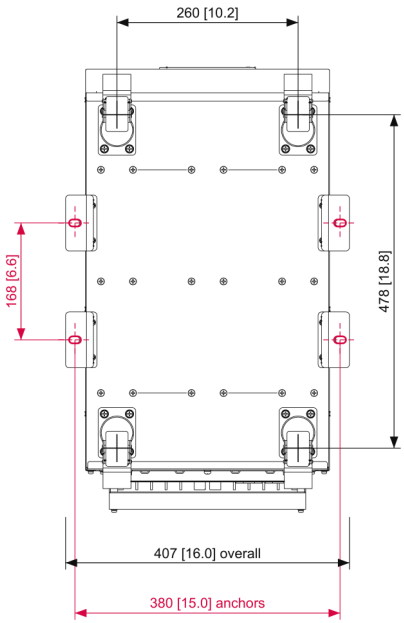

Bottom view: casters and floor anchors
scale 1:8 · front at the top
black crosses: caster centres · red: anchor slots 10 × 17 mm, anchors M8 by the installer

FIGURE D-8 Clearances and floor anchors, FERSP20000-EXT (AEC-FSP-20E-06)

E

APPENDIX E

Quick reference

The touchscreen paths for everyday tasks.

TABLE E-1 Quick reference

Task	How
Start the inverter	**Control › Function › ON/OFF Control**
Start without utility (cold start)	COLD START button, then **ON/OFF Control**
Transfer to bypass	**Control › Function › Manual Bypass**
Return to the inverter	**Control › Function › Manual Transfer to Inverter**
Maintenance bypass	Manual Bypass, battery breakers open, switch to BYPASS (Section 6.12)
Silence the buzzer	Speaker icon, top right
See the alarms	**Data › Current Alarm**
Clear a fault	**Control › Function › Fault Clear**
Battery test	**Control › Test › Battery Test** · **Stop Test**
Battery status and remaining time	**Data › Battery**
Load per leg	**Data › Load**
Battery set-up	**Set › BATT Set**
Rated voltage and frequency	**Set › Rate Set** (Set, page 2)
Single / parallel / ECO	**Set › Sys Set** (Set, page 2)
Network address	**Set › NetWork**
Date, time, serial number	**Set › Sys Func**
Language	**Set › Language**

APPENDIX F

Frequently asked questions

Short answers to common questions.

TABLE F-1 Frequently asked questions

Question	Answer
Should the UPS stay switched on?	Yes. Leave it on all the time: it protects the load and keeps the battery charged.
How long does the battery take to recharge?	At least 12 hours for a full charge after a long discharge.
Is the output a pure sine wave?	Yes. The UPS is online double conversion: the inverter builds a regulated sine wave at all times, on utility and on battery.
What happens when the battery runs out?	The UPS switches its output off at the end of discharge, then restarts by itself when the utility returns and recharges the battery.
Which model do I have?	The ordering code is on the rating label: 40X9 (batteries inside), EMPTY (compartment empty) or EXT (smaller cabinet, external battery).
Can I add batteries later?	Yes. On the 40X9 and EMPTY a long-backup cabinet connects to BAT+ / BAT−; on the EXT the external cabinet can be enlarged. Ask AEC to size it, and enter the new set-up in **Set › BATT Set**.
Does the UPS need a neutral at the input?	No. The input is I/P-L1, I/P-L2 and PE. The output neutrals come from the isolation transformer.
What is ECO mode, and should I use it?	In ECO mode the load runs on the bypass while the utility is good: efficiency is higher, but the load is not protected from utility disturbances. Use normal online mode for sensitive equipment.
Can I plug a power strip into the UPS?	The UPS has no receptacles: loads connect through an output panel. Plain power strips on receptacles of that panel are fine within their rating. Do not chain surge-protector strips, and never connect a UPS to the output of another UPS.
Which equipment should not be connected?	Laser printers, space heaters, vacuum cleaners, hair dryers and other loads with high start-up current or half-wave rectifiers.
Can I use the UPS with a generator?	Yes — see Section 3.5.
Can I move the UPS while it runs?	No. Shut it down and disconnect it first; move it upright.
Does a 240 V load need the neutral?	No. A 240 V load connects between O/P-L1 and O/P-N2 (configuration 03 or 04). A 120/240 V three-wire load uses O/P-L1, O/P-N2 and the jumpered O/P-N1–O/P-L2 as its neutral.
Why are there two access levels?	The User level reads data and silences the buzzer; the Engineer level changes settings and runs tests, so that nobody changes the UPS by mistake.

APPENDIX G

Installation record

Fill this record in at installation and keep it with the UPS. It is the first thing AEC service will ask for.

TABLE G-1 Installation record

Item	Value
Model and ordering code (40X9 · EMPTY · EXT)	
Serial number	
Installation date	
Installed by (company, name)	
Site and room	
Input circuit (breaker rating, conductor size)	
Battery set-up (internal, fitted on site, external cabinet)	
Blocks set, capacity set (Ah) and charge current	
Output configuration (01, 02, 03 or 04)	
Rated output voltage per leg	
Network address	
Parallel: unit ID / number of units	
Load at start-up (%)	
Battery test result and date	

Service and support

AEC technical support is available 24 hours a day, 7 days a week. For help with installation, start-up, alarms, settings, spare parts, warranty claims and service visits, contact us by WhatsApp, phone or e-mail.

TECHNICAL SUPPORT · 24/7	**+1 786 553 2100**	WhatsApp and phone — always available
SERVICE E-MAIL	**service.us@aecups.com**	Technical questions, service requests, warranty claims
SALES	**sales@aecups.com**	
ADDRESS	**AEC UPS USA LLC**	4872 SW 72nd Ave, Miami, FL 33155
WEB	**aecups.com**	

When you contact us, have ready: the model and ordering code (40X9, EMPTY or EXT), the serial number (on the rating label and in Set › Sys Func), the alarm shown in Data › Current Alarm, the load and the battery set-up — a photo of the display and of the label speeds things up on WhatsApp.