ONLINE UPS · 120 V · TOWER

FERRUS

1–3 kVA

Online double-conversion UPS, single-phase 120 V, unity power factor, with internal VRLA batteries and BAT battery cabinets for longer runtime.



User Manual

Installation · Operation · Maintenance

FERRUS 1K | FERRUS 2K | FERRUS 3K

COPYRIGHT AND NOTICES

Copyright © 2026 AEC UPS USA LLC. All rights reserved. No part of this document may be reproduced or transmitted in any form or by any means without the prior written consent of AEC UPS USA LLC.

Trademarks. AEC and FERRUS are trademarks of AEC UPS USA LLC. All other trademarks and trade names mentioned in this document are the property of their respective owners.

Notice. The products, services and features you purchase are defined by the contract between AEC and the customer; some of those described in this document may not be included in your purchase or use. Unless the contract says otherwise, all statements, information and recommendations in this document are provided “as is”, without warranties, guarantees or representations of any kind, express or implied. The information in this document may change without notice. Every effort has been made to ensure its accuracy, but nothing in it constitutes a warranty of any kind, express or implied. The illustrations are for reference: the actual product may differ slightly.

AEC UPS USA LLC
4872 SW 72nd Ave, Miami, FL 33155
Technical support, 24/7 · phone and WhatsApp: **+1 786 553 2100**
service.us@aecups.com · sales@aecups.com · aecups.com

AEC-UM-FER-US · Rev. D · November 2026. Rev. D restores the battery current and battery-pack rules of the previous manual, sizes the branch circuit to the NEC, corrects the battery-cabinet example and the communication settings, adds the FCC statement and labeled pictures of every panel, port, display page and setting menu, and removes factory artifacts.

BEFORE YOU START

About this manual

Thank you for choosing an AEC FERRUS UPS. This manual describes the FERRUS 1–3 kVA online tower UPS: safety, the product and its panels, planning, installation, operation, the display and the settings, communication, the battery and runtime, maintenance, troubleshooting and the specifications. Read it before you start, and keep it with the UPS.

MODELS COVERED

FERRUS 1K, 2K and 3K tower, 120 V, with internal VRLA batteries, alone or with one to four BAT battery cabinets. Ordering codes: Table 2-1. The rack/tower FERRUS RT has its own user manual.

WHO THIS MANUAL IS FOR

Installers, IT and facility staff who install and operate the UPS. The branch circuit must be installed by a qualified electrician to the National Electrical Code (NFPA 70) and local codes. Battery work must be done by qualified personnel.

Safety messages

Safety messages in this manual follow ANSI Z535.6. The signal word tells how serious the hazard is:

DANGER	A hazardous situation which, if not avoided, **will** result in death or serious injury.
WARNING	A hazardous situation which, if not avoided, **could** result in death or serious injury.
CAUTION	A hazardous situation which, if not avoided, could result in minor or moderate injury.
NOTICE	Information about practices that could damage the equipment, lose data, reduce performance or give unexpected results — not related to injury.

Other conventions

i NOTE Additional information that stresses or completes the text.

✓ TIP A hint that helps you solve a problem or save time.

Keys are shown like [ON]; menus like **Settings › Battery**. Numbers in red circles on a picture are explained in the list under it. Cross-references in red are links in the PDF.

QUICK START

Up and running in six steps

The short version — each step points to the full instructions. Read the safety chapter first.

1. **Unpack and inspect** the UPS and the box contents. Section 4.1, page 20.
2. **Place the tower** indoors, 32–104 °F (0–40 °C), with the front and rear vents clear. Section 4.3, page 20.
3. **Check the branch circuit:** a grounded receptacle on its own circuit, sized to the NEC from the maximum input current — 15 A (1K), 30 A (2K), 40 A (3K). Table 4-2, page 21.
4. **Long-backup only:** plug in the BAT battery cabinets after the input, close their breakers and set the battery Ah and the charge current. Section 4.7, page 22.
5. **Start — no key needed.** The UPS starts on bypass and goes to normal mode by itself (REC and INV steady green). Then switch the loads on, largest first. Section 5.3, page 24.
6. **Charge the battery for at least 12 hours** before relying on the full runtime. Section 8.2, page 37.

0 ms	kVA = kW	4.2–56 min	3 + 2 years
transfer to battery, online double conversion	unity output power factor, 1–3 kVA	at full load, internal batteries to four cabinets	warranty, UPS + VRLA batteries

CONTENTS

Contents

1 Safety 7
1.1 Battery safety 7
1.2 General safety 7
1.3 Installation environment and EMC 8
1.4 Standards 8

2 Product description 9
2.1 Introduction 9
2.2 Models and ordering codes 10
2.3 What is in the box 10
2.4 Front panel 10
2.5 Operation panel 11
2.6 LCD 12
2.7 Rear panels 13
2.8 How the UPS works 16
2.9 Operating modes 17
2.10 Protections 17

3 Planning the installation 18
3.1 Sizing the load 18
3.2 Estimating the runtime 18
3.3 Running on a generator 18

4 Installation 20
4.1 Unpacking and inspection 20
4.2 Site and environment 20
4.3 Placing the tower 20
4.4 Branch circuit and input 20
4.5 Connecting the loads 21
4.6 Communication connections 22
4.7 Adding battery cabinets 22

5 Operation 24
5.1 Before the first start 24
5.2 Turning the UPS on and off at a glance 24
5.3 Starting on utility power 24
5.4 Starting on battery (cold start) 25
5.5 Transferring to bypass and back 25
5.6 ECO mode 26
5.7 Silencing the alarm 26
5.8 Shutting down 26
5.9 Everyday use 26
5.10 What the panel tells you 27
5.11 Reading the LCD pages 27
5.12 Settings 28

6 Communication and monitoring 32
6.1 SNMP-M network card 32
6.2 Setting up the SNMP-M card 32
6.3 UPS View software 33

6.4 Dry-contact card 34
6.5 Emergency power off (EPO) 35

7 Battery and runtime 36

8 Maintenance 37
8.1 Maintenance schedule 37
8.2 Battery care and the battery test 37
8.3 Component life 37
8.4 Battery life and temperature 38
8.5 Replacing the internal battery 38
8.6 Battery handling and disposal 39
8.7 Storage and transport 39

9 Troubleshooting 40
9.1 Checking the UPS 40
9.2 Symptoms and remedies 40
9.3 Fault and warning codes 41

10 Specifications 44

A Ordering codes and accessories 46

B Battery assembly 47
B.1 FERRUS 1K 47
B.2 FERRUS 2K and 3K 47

C Warranty 49

D Acronyms and abbreviations 50

E Drawings 51

F Quick reference 52

G Frequently asked questions 53

H Installation record 54

CHAPTER 1

01 Safety

Read this chapter before you install, operate or service the UPS. Safety messages also appear in the chapters where each task is described.

⚠ WARNING

IMPORTANT SAFETY INSTRUCTIONS — SAVE THESE INSTRUCTIONS. This manual contains important instructions for the FERRUS 1–3 kVA UPS and its batteries that must be followed during installation, operation and maintenance.

1.1 Battery safety

⚠ DANGER

The battery can cause electric shock and high short-circuit current. Observe these precautions before you work on the batteries:

- Wear rubber gloves and boots.
- Remove rings, watches and other metal objects.
- Use tools with insulated handles.
- Do not lay tools or other metal objects on the batteries.
- If a battery is damaged or shows signs of leakage, contact AEC service immediately.
- Do not dispose of batteries in fire: they can explode.
- Handle, transport and recycle batteries according to local regulations.

1.2 General safety

⚠ WARNING

Improper use can cause electric shock or fire.

- Switch the UPS off and unplug it before cleaning it.
- Clean the UPS with a dry cloth. Do not use liquid or aerosol cleaners.
- Never block the ventilation openings or insert objects into them.
- Do not place the power cord where it can be damaged.

⚠ WARNING

The UPS contains no user-serviceable parts except the internal battery pack. Never open the UPS for any other reason: risk of electric shock or burns.

- Battery service must be done or supervised by personnel who know batteries and the precautions needed. Keep unauthorized persons away from the batteries.
- Dispose of used batteries properly, according to local laws and regulations.

⚠ CAUTION

Do not connect equipment that could overload the UPS or draw DC current from it — for example electric drills, vacuum cleaners, laser printers, hair dryers or any appliance with half-wave rectification.

1.3 Installation environment and EMC

- Install and operate the UPS indoors only, at an ambient temperature of 32–104 °F (0–40 °C).
- Install it in a clean place, free from moisture, flammable liquids, gases and corrosive substances.

NOTICE

This product is intended for sale to informed professional partners. Installation restrictions or additional measures may be needed to prevent radio interference. See the FCC statement in Section 1.4.1.

1.4 Standards

The UPS meets the UL 1778 standard. It is designed according to the standards in Table 1-1.

TABLE 1-1 Design standards

Standard	Subject
UL 1778	Uninterruptible power systems — safety (North America)
FCC Part 15, Subpart B	Radio-frequency emissions, Class A digital device (United States)
IEC 62040-1	UPS — general and safety requirements
IEC 62040-2	UPS — electromagnetic compatibility (EMC)
IEC 62040-3	UPS — performance and test requirements
IEC 61000-3-2 · IEC 61000-3-12	Harmonic currents (up to 16 A · above 16 A per phase)
IEC 61000-3-3 · IEC 61000-3-11	Voltage fluctuations and flicker
IEC 61000-4-2 to -4-8	Immunity to electrostatic discharge (-4-2), radiated fields (-4-3), fast transients / bursts (-4-4), surges (-4-5), conducted disturbances (-4-6) and power-frequency magnetic fields (-4-8)
IEC 63000	Restriction of hazardous substances (RoHS) — technical documentation

The branch circuit that feeds the UPS must meet the National Electrical Code (NFPA 70) and local codes (Section 4.4).

1.4.1 FCC statement

This equipment has been tested and found to comply with the limits for a Class A digital device, pursuant to Part 15 of the FCC Rules. These limits are designed to provide reasonable protection against harmful interference when the equipment is operated in a commercial environment. This equipment generates, uses and can radiate radio-frequency energy and, if not installed and used in accordance with this manual, may cause harmful interference to radio communications. Operation of this equipment in a residential area is likely to cause harmful interference, in which case the user will be required to correct the interference at his own expense.

Changes or modifications not expressly approved by AEC could void the user's authority to operate the equipment.

02

CHAPTER 2

Product description

The FERRUS range, its models and codes, the front panel, the display and keys, the rear panels, how the UPS works, its operating modes and its protections.

2.1 Introduction

FERRUS is an online double-conversion UPS for 120 V single-phase loads from 1 to 3 kVA, with unity output power factor (kVA = kW) and internal VRLA batteries. The tower stands on the floor or on a desk. BAT battery cabinets of the same height stand beside it and extend the runtime (Figure 2-1, Figure 2-2).



FIGURE 2-1 FERRUS tower, front



FIGURE 2-2 BAT battery cabinet

ONLINE DOUBLE CONVERSION

The inverter always feeds the load: 0 ms transfer to battery, and a regulated sine wave on utility and on battery.

KVA = KW

Output power factor 1: every VA is a usable watt — 1,000, 2,000 or 3,000 W.

WIDE INPUT WINDOW, 55–150 V

Brownouts stay on the utility, so the battery is saved for real outages: full load down to 90 V, 70 % load down to 70 V, 40 % load down to the 55 V lower limit.

ONLINE OR ECO

Online (S) or ECO (E) system mode, set from the panel (Section 5.6).

ONE TO FOUR BATTERY CABINETS

BAT cabinets of the UPS's DC voltage give up to 56.4 min at full load (Chapter 7).

SETTABLE CHARGER

Long-backup models charge at 1 to 8 A, set to the installed battery of 9 to 200 Ah (Section 5.12.2).

i NOTE **FERRUS RT** (rack/tower, 2U) is a different product with its own user manual. This manual covers the tower only.

2.2 Models and ordering codes

TABLE 2-1 FERRUS models and ordering codes

Model	Rating	Code	Battery inside	Output receptacles
FERRUS 1K	1,000 VA / 1,000 W	FER1000-2X9	2 × 12 V 9 Ah · 24 V DC	6 × NEMA 5-15R
FERRUS 2K	2,000 VA / 2,000 W	FER2000-4X9	4 × 12 V 9 Ah · 48 V DC	8 × NEMA 5-20R
FERRUS 3K	3,000 VA / 3,000 W	FER3000-6X9	6 × 12 V 9 Ah · 72 V DC	6 × NEMA 5-20R + 1 × NEMA L5-30R

TABLE 2-2 How to read the ordering code — example FER3000-6X9+BAT1272x2

Part	Meaning
FER	FERRUS series (tower)
3000	Rating in VA: 1000, 2000 or 3000
6X9	Internal battery: 6 blocks of 12 V 9 Ah
+BAT1272	Battery cabinet: 12 blocks, 72 V DC — the DC voltage of the UPS (Table 4-3)
x2	Number of cabinets, 1 to 4 (no suffix = one cabinet)

2.3 What is in the box

- 1 × FERRUS UPS
- 1 × user manual
- 1 × input cable (1K, for the IEC C14 inlet); the 2K and 3K have an attached cord
- 1 × battery cable (long-backup systems with BAT cabinets)

Inspect the contents on delivery. Report damage to the carrier and missing parts to AEC (Section 4.1).

2.4 Front panel

The front of the tower carries the operation panel (Figure 2-4) above the perforated air inlet. Cooling air enters at the front and leaves at the rear: keep both clear.

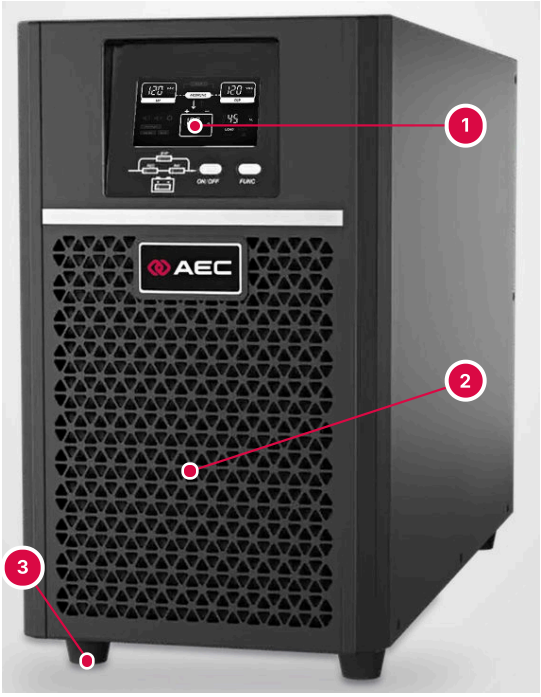

1. Operation panel — LCD, status LEDs and the keys ON/OFF and FUNC (detail in the next figure)
2. Front grille — cooling-air inlet; keep clear
3. Feet — stand the tower on a flat, stable floor or desk

FIGURE 2-3 FERRUS front view (2K and 3K shown; the 1K is the same design, smaller)

2.5 Operation panel

The operation panel has a segment LCD, four status LEDs on a power-flow mimic and two keys, ON/OFF and FUNC (Figure 2-4). Table 2-3 explains the LEDs and Table 2-4 the keys. *Press* means a short press; *hold* means keep the key pressed for the time given.

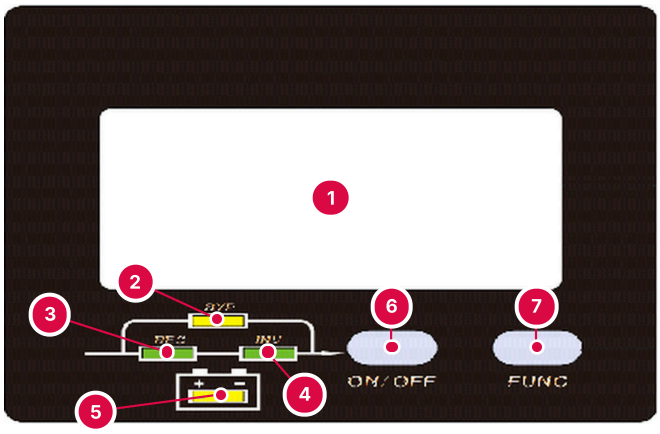

1. LCD (Section 2.6)
2. BYP LED, yellow — bypass
3. REC LED, green — rectifier
4. INV LED, green — inverter
5. BAT LED, yellow — battery
6. ON/OFF key
7. FUNC key

FIGURE 2-4 Operation panel

TABLE 2-3 Status LEDs (numbers as in the operation-panel figure)

LED	Steady	Flashing	Off
2 · BYP	Yellow: load on bypass	Yellow: bypass alarm	Normal mode, bypass good
3 · REC	Green: rectifier normal	Green: rectifier starting	Rectifier not working
4 · INV	Green: inverter normal	Green: starting, or tracking the bypass (ECO)	Inverter not working
5 · BAT	Yellow: battery discharging	Yellow: no battery, or battery alarm	Battery connected

TABLE 2-4 Keys

Key	Function
ON/OFF	Press: starts the inverter when the rectifier is ready (not needed when the UPS starts by itself). Hold 2.5 s: moves the load to bypass; on battery, shuts the UPS down. No utility: press once to light the LCD, then hold 5 s to start from the battery (cold start). In the settings: confirms the value shown and goes to the next page.
FUNC	Press: next LCD page (Section 5.11). Hold 1.5 s on page 1: mutes or unmutes the buzzer. Hold 1.5 s on page 4: clears a fault. In the settings: changes the value shown.
FUNC + ON/OFF	Hold both 2.5 s: opens the settings, or leaves them without saving from any page. New settings apply after a restart.

2.6 LCD

Figure 2-5 shows every segment and icon of the LCD. In use only the segments for the present state light. Figure 5-1 (Section 5.3) shows the LCD in normal online operation.

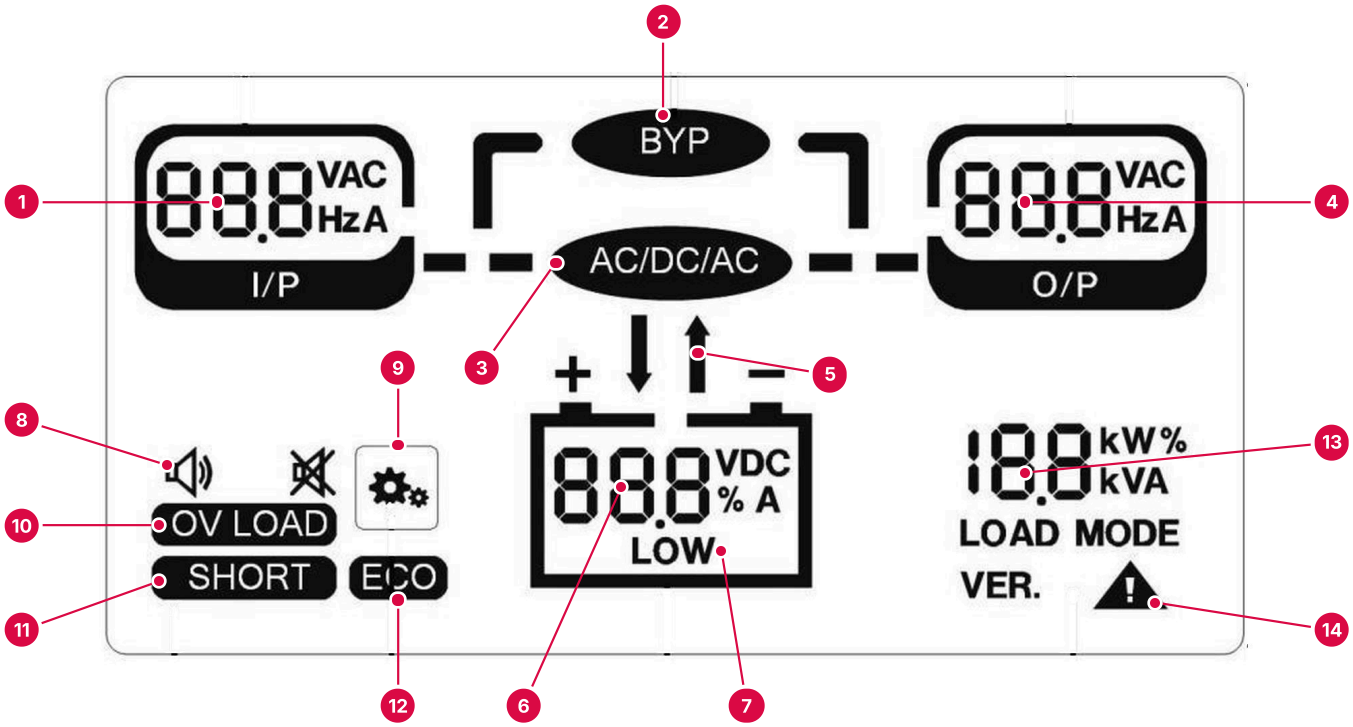

1. Input: voltage (VAC), frequency (Hz) or current (A), page by page; bypass input when “B” flashes
2. BYP — the load runs on the bypass
3. AC/DC/AC — online double conversion
4. Output: voltage, frequency or current
5. Battery arrows: down = charging, up = discharging, none = no battery
6. Battery: voltage (VDC), current (A), capacity (%), capacity setting (Ah) or temperature
7. LOW — battery nearly exhausted
8. Buzzer on (speaker) · buzzer muted (crossed speaker)
9. Gear — the settings are open
10. OV LOAD — overload
11. SHORT — output short circuit
12. ECO — ECO mode (system mode E)
13. Load (kW, kVA or %), firmware version (VER.) or model (MODE); the label below the digits tells which
14. Warning triangle — the digits show a fault or warning code (Section 9.3)

FIGURE 2-5 LCD — every segment and icon

2.7 Rear panels

Each rating has its own rear panel (Figure 2-6, Figure 2-7, Figure 2-8). The numbers are the same on the three models; Table 2-5 describes each part. The tower has no RS-485 port on the rear panel.

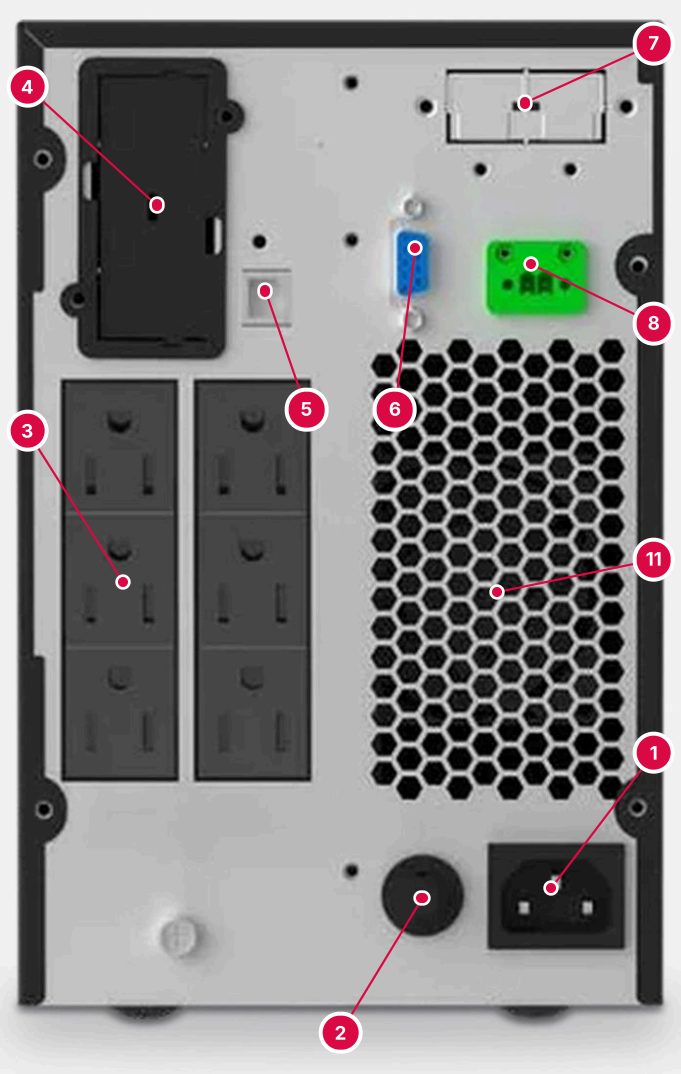

1. Input — IEC C14 inlet for the cord supplied
2. Input surge protector, resettable
3. Output receptacles, 6 × NEMA 5-15R, two groups
4. Intelligent slot — cover, SNMP-M or dry-contact card
5. USB (option)
6. RS-232, DB9
7. External battery connector, + and –
8. EPO terminal, 2 pins, normally closed
11. Fan grille — air out; keep clear

FIGURE 2-6 Rear panel — FERRUS 1K

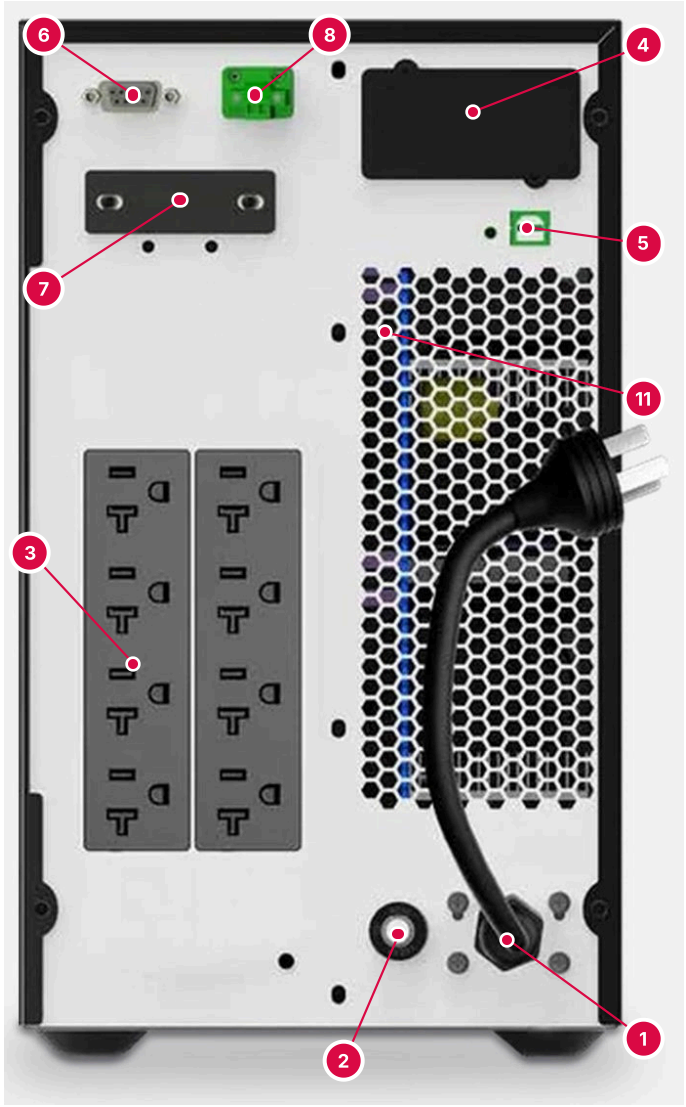

1. Input — attached cord
2. Input surge protector, resettable
3. Output receptacles, 8 × NEMA 5-20R, two groups
4. Intelligent slot — cover, SNMP-M or dry-contact card
5. USB (option)
6. RS-232, DB9
7. External battery connector, + and –
8. EPO terminal, 2 pins, normally closed
11. Fan grille — air out; keep clear

FIGURE 2-7 Rear panel — FERRUS 2K

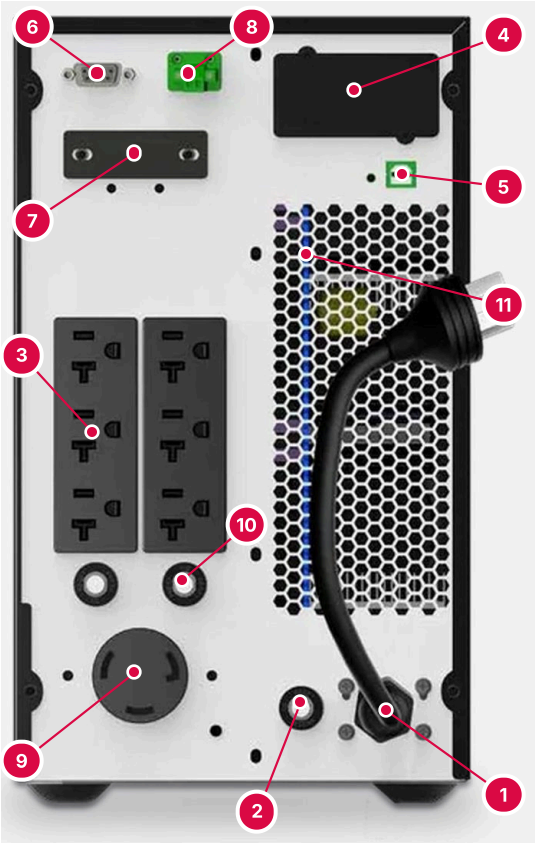

1. Input — attached cord, NEMA L5-30P plug
2. Input surge protector, resettable
3. Output receptacles, 6 × NEMA 5-20R, two groups
4. Intelligent slot — cover, SNMP-M or dry-contact card
5. USB (option)
6. RS-232, DB9
7. External battery connector, + and –
8. EPO terminal, 2 pins, normally closed
9. NEMA L5-30R twist-lock receptacle, 30 A
10. Output protectors, resettable, one per receptacle group
11. Fan grille — air out; keep clear

FIGURE 2-8 Rear panel — FERRUS 3K

TABLE 2-5 Rear-panel parts

No.	Part	Models	Description
1	Input	All	IEC C14 inlet with the cord supplied (1K); attached cord (2K and 3K). Plug types and branch circuits: Table 4-2.
2	Input surge protector	All	Resettable protector of the input. Press it to reset after it trips.
3	Output receptacles	All	NEMA receptacles in two groups (Table 2-1).
4	Intelligent slot	All	Holds a cover, or an optional SNMP-M network card or dry-contact card (Chapter 6).
5	USB	All	Optional, for monitoring software (Section 6.3).
6	RS-232	All	DB9 port for monitoring software (Section 6.3).
7	External battery connector	All	For the BAT battery cabinets (long backup, Section 4.7).
8	EPO	All	Emergency power off, normally closed: opening the loop turns the output off (Section 6.5).

No.	Part	Models	Description
9	NEMA L5-30R	3K	30 A twist-lock receptacle for a load drawing more than 20 A.
10	Output protectors	3K	Resettable protectors of the receptacle groups. Press to reset after removing the overload.
11	Fan grille	All	Warm air out. Keep the rear clear.

2.8 How the UPS works

FERRUS is an online double-conversion UPS (Figure 2-9). The PFC rectifier turns the utility AC into a regulated DC bus while drawing a near-sinusoidal current (input power factor above 0.99 at full load). The inverter rebuilds a precise, regulated sine wave from the DC bus, so the load never sees the utility directly. A DC-to-DC converter charges the battery and, when the utility fails, boosts the battery voltage onto the DC bus with no interruption. If the inverter fails, or an overload lasts longer than allowed, the static bypass connects the load to the utility.

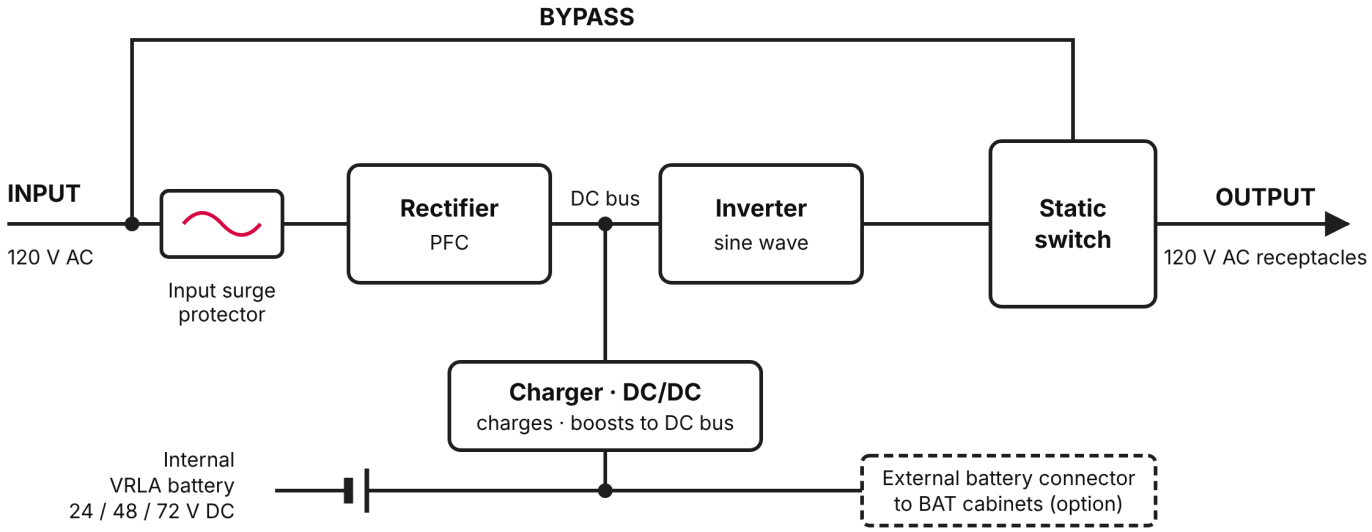

FIGURE 2-9 Single-line diagram of the power path

TABLE 2-6 The parts of the power path

Part	What it does
Rectifier / power-factor correction (PFC)	Converts the utility AC into regulated DC for the inverter while drawing a near-ideal input current: the utility power is used efficiently and less distortion goes back to the building wiring.
Inverter	Turns the DC power into a precise, regulated sine-wave output. In both utility and battery operation the inverter is online and generates the output continuously.
DC-to-DC converter (charger)	Raises the battery voltage to the operating voltage of the inverter; its boost circuit also works as PFC, and it converts DC bus energy to charge the battery.
Battery	Sealed, maintenance-free valve-regulated lead-acid (VRLA) blocks of 12 V 9 Ah inside the UPS; BAT cabinets add more of the same DC voltage.
Bypass	Connects the load directly to the utility if the inverter fails or an overload times out.

2.9 Operating modes

TABLE 2-7 Operating modes and what the panel shows

Mode	When	LEDs	LCD
Normal (online)	Utility present; the inverter feeds the load and the battery is charged.	REC and INV steady green	AC/DC/AC lit; battery arrow down (charging)
Battery	Utility out of range or failed; the battery feeds the inverter with no break (0 ms).	INV green, BAT yellow; buzzer beeps	Battery arrow up (discharging); remaining capacity %
Bypass	UPS off with utility present, inverter fault, or overload timeout.	BYP yellow, INV off	BYP lit
ECO	System mode E: the load runs on the bypass while the utility is good; the inverter takes over when it is not.	BYP yellow, INV flashing green	ECO icon
Cold start	No utility: the UPS is started from its battery with the ON/OFF key.	INV green, BAT yellow	As battery mode

NOTICE

On bypass and in ECO mode the load is not protected from utility disturbances.

2.10 Protections

- Input surge protector, resettable (item 2 on the rear panel).
- Overload: transfer to bypass, then output off if the overload continues on bypass.
- Output short circuit.
- Rectifier and inverter over-temperature; fan failure.
- Battery low warning and end-of-discharge shutdown.
- Line and neutral reversed; input neutral lost.
- EPO input (normally closed loop).

CHAPTER 3

03 Planning the installation

Sizing the load, estimating the runtime and running on a generator — before you install.

3.1 Sizing the load

The output power factor is 1: the UPS delivers its full rating in watts — 1,000, 2,000 or 3,000 W. Size the UPS on the watts the loads draw.

1. List every device that will run on the UPS.
2. Read its power in watts on the label or in the data sheet. If only volts and amps are given, multiply them (V × A). That gives VA, which is equal to or higher than the watts, so the estimate is on the safe side.
3. Add the watts. Keep the total at or below 80 % of the UPS rating: the margin covers start-up currents, future equipment and battery aging.
4. Check that no receptacle or receptacle group is overloaded (Table 2-1).

TABLE 3-1 Worked example — a small server closet on a FERRUS 2K

Load	Watts	From
File server	450 W	power-supply label or vendor data sheet
Network storage (NAS)	120 W	label
Network switch	40 W	label
Firewall / router	30 W	label
Total	**640 W**	**32 % of 2,000 W**

Runtime. 32 % lies between the 30 % and 40 % columns of Table 7-1: about 18 minutes with the internal batteries, about 42 minutes with one BAT0848 cabinet. Once the UPS runs, measure rather than guess: LCD page 1 shows the real load in %, kW or kVA. Recheck after adding equipment.

3.2 Estimating the runtime

1. Work out the load as a percentage of the rating.
2. Find the two load columns either side of it in Table 7-1 and estimate between them.
3. Allow a margin: the runtime is shorter with batteries that are old, cold, hot or not fully charged.
4. If the runtime is too short, add BAT battery cabinets — or reduce the load: halving the load roughly doubles the runtime or more.

3.3 Running on a generator

The UPS accepts an input of 55–150 V (full load from 90 V) and 60 Hz ±5 Hz, so it rides through the voltage and frequency swings of a standby generator, and its PFC input (power factor above 0.99) loads the generator cleanly.

- As a general rule, choose a generator rated at least 1.5 times the UPS input power, so that it can also cover the battery recharge.

- Let the generator reach stable voltage and frequency before the transfer switch connects it to the UPS. The UPS stays on battery until the input is within range.
- If the UPS keeps returning to battery while on the generator, the generator is too small or unstable: check its voltage and frequency.

CHAPTER 4

04 Installation

Unpacking, the site, placing the tower, the branch circuit and input, the loads, the battery cabinets and the communication cables.

4.1 Unpacking and inspection

1. Open the package and check its contents (Section 2.3).
2. Inspect the UPS for transport damage. If anything is damaged or missing, do not switch the UPS on: notify the carrier and your AEC dealer immediately.
3. If the UPS was unpacked in a cold place, wait until it is completely dry inside and out before installing it: condensation can cause electric shock.

4.2 Site and environment

TABLE 4-1 Operating environment

Item	Requirement
Location	Indoors, clean, dry; away from water, flammable liquids, gases and corrosive substances; out of direct sunlight
Temperature	32–104 °F (0–40 °C); battery life is best at 68–77 °F (20–25 °C)
Humidity	Below 95 %, non-condensing
Altitude	Full power up to 3,300 ft (1,000 m); derate above (Table 10-3)
Ventilation	Front and rear vents clear

4.3 Placing the tower

- Place the UPS indoors only, on a flat, stable floor or desk (Figure 2-3).
- Leave free space at the front and rear so the cooling air can flow. Do not place the tower against a wall or in a closed cabinet.
- Stand the BAT battery cabinets beside the UPS (same height, Figure E-1).
- Keep the UPS away from water, heat sources, flammable gas and corrosive agents, and out of direct sunlight.

4.4 Branch circuit and input

⚠ WARNING

Connect or disconnect a battery cabinet only with the UPS switched off and unplugged from the utility receptacle (Section 4.7).

Plug the UPS into a grounded receptacle on its own branch circuit. The breaker of that circuit has the same rating as the plug of the UPS (Table 4-2) and is never larger: NEC 210.21(B) requires the receptacle to match the rating of the branch circuit. The maximum input current in the table is the factory value at low input voltage, full load and full battery recharge; it is not a continuous current.

TABLE 4-2 Input and branch circuit by model

Model	UPS input	Max. input current (factory data)	Building breaker, 1-pole	Receptacle	Branch conductor, Cu (NEC 240.4(D))
FERRUS 1K	IEC C14 inlet, cord supplied	10 A	15 A	NEMA 5-15R	14 AWG
FERRUS 2K	Attached cord, straight-blade plug (type: ask AEC)	20 A	20 A for a NEMA 5-20P — see the warning	NEMA 5-20R	12 AWG
FERRUS 3K	Attached cord, NEMA L5-30P plug	30 A	30 A	NEMA L5-30R	10 AWG

- Use a dedicated branch circuit for the UPS. Do not use an extension cord or a power strip on the UPS input.
- Use copper conductors and terminations rated 75 °C (167 °F) (NEC 110.14(C)).
- Keep the working space in front of the receptacle and the panelboard required by NEC 110.26.

⚠ WARNING

Plug, receptacle and breaker must match. The plug type of the 2K is not yet confirmed (20 A applies to a NEMA 5-20P), and the maximum input current of the 2K and 3K equals the plug rating. Do not install a larger breaker and do not change or adapt the plug: contact AEC (+1 786 553 2100) if the plug does not match the receptacle. The 1K uses its supplied cord on a 15 A circuit.

4.5 Connecting the loads

Plug the loads into the output receptacles (item 3 in Figure 2-6, Figure 2-7 and Figure 2-8). The total load must not exceed the UPS rating (1,000 W per kVA). On the 3K, the NEMA L5-30R twist-lock receptacle (Figure 4-1) serves a load drawing more than 20 A.



FIGURE 4-1 NEMA L5-30R twist-lock receptacle (3K, rear-panel item 9): insert the plug and turn it clockwise

⚠ CAUTION

Do not connect equipment that could overload the UPS or draw DC current from it — laser printers, vacuum cleaners, hair dryers, drills or half-wave rectifier loads. Do not connect surge-protector strips, and never connect a UPS to the output of another UPS.

4.6 Communication connections

Connect the monitoring and signal cables before starting the UPS — RS-232 or USB (Section 6.3), the card in the intelligent slot (Section 6.2, Section 6.4) and the EPO (Section 6.5).

4.7 Adding battery cabinets

One to four BAT battery cabinets of the UPS's DC voltage extend the runtime (Table 4-3). Use only the matching BAT cabinet. Each cabinet holds two parallel strings of 12 V 9 Ah blocks, 18 Ah in all; its breaker isolates the batteries.

TABLE 4-3 BAT battery cabinets

Code	Blocks · DC voltage	For	W × D × H	Weight
BAT0424	4 × 12 V 9 Ah (2 strings of 2) · 24 V DC	FERRUS 1K	5.6 × 8.6 × 13.9 in (142 × 218 × 353 mm)	31.4 lb (14.2 kg)
BAT0848	8 × 12 V 9 Ah (2 strings of 4) · 48 V DC	FERRUS 2K	7.5 × 12.6 × 15.8 in (190 × 319 × 400 mm)	58.8 lb (26.7 kg)
BAT1272	12 × 12 V 9 Ah (2 strings of 6) · 72 V DC	FERRUS 3K	7.5 × 12.6 × 15.8 in (190 × 319 × 400 mm)	86.2 lb (39.1 kg)

⚠ CAUTION

- **Same voltage, same type.** External batteries must have the UPS's nominal DC voltage — 24 V DC (1K), 48 V DC (2K) or 72 V DC (3K) — with the blocks of each string connected in series to reach it. To get a longer runtime you can connect several battery cabinets, but strictly follow the rule "same voltage, same type".
- **Minimum capacity for the charge current.** Connect at least 40 Ah of battery when the charger is set to 8 A, and at least 20 Ah when it is set to 4 A. A smaller battery can be damaged.
- **Battery current.** The battery current reaches 50 A max. Use only the battery cable supplied by AEC.

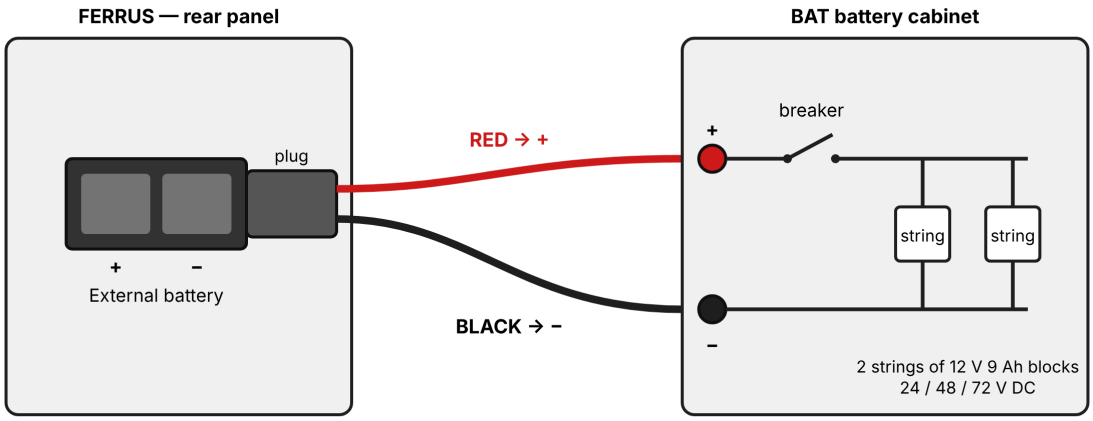

Battery cable supplied with long-backup systems

FIGURE 4-2 Connecting a BAT cabinet: red wire to +, black wire to –, plug to the external battery connector

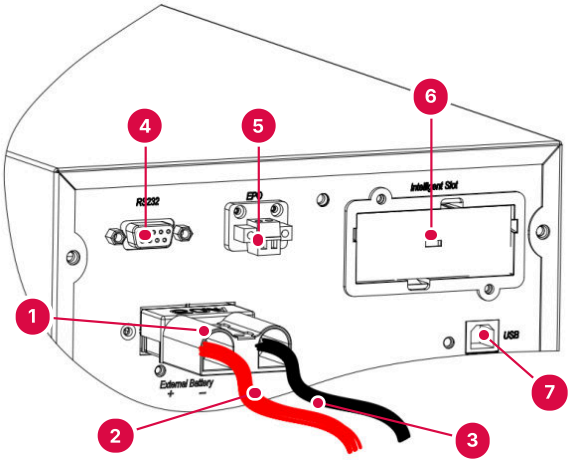

1. External battery connector (rear-panel item 7) with the battery-cable plug
2. RED wire — to the cabinet's + terminal
3. BLACK wire — to the cabinet's – terminal
4. RS-232
5. EPO terminal
6. Intelligent slot
7. USB

FIGURE 4-3 The battery cable plugged into the external battery connector (2K and 3K shown; on the 1K the connector is at the top right)

1. Shut the UPS down (Section 5.8) and unplug it from the utility receptacle. Check that the breaker of the battery cabinet is open.
2. Take the battery cable supplied: one end has a plug, the other end has two wires.
3. Connect the RED wire to the "+" terminal and the BLACK wire to the "–" terminal of the battery cabinet (Figure 4-2).
4. Plug the battery connector into the external battery connector on the rear panel (item 2 in Figure 4-3; item 7 in Figure 2-6, Figure 2-7 and Figure 2-8).
5. Close the breaker of the battery cabinet.
6. Set the battery capacity and the charge current in menu 123 (Section 5.12.2; values in Table 4-4).
7. Charge for at least 12 hours before relying on the full runtime.

TABLE 4-4 Battery capacity to set, and the highest charge current the capacity rule allows

Battery set-up	Capacity to set	Charge current
Internal batteries only	9 Ah	1 A (standard model)
Internal + 1 cabinet	27 Ah	up to 4 A (at least 20 Ah)
Internal + 2 cabinets	45 Ah	up to 8 A (at least 40 Ah)
Internal + 3 cabinets	63 Ah	up to 8 A
Internal + 4 cabinets	81 Ah	up to 8 A

CHAPTER 5

05 Operation

Starting, stopping and transferring the UPS, ECO mode, the alarm, everyday use, the LCD pages and the settings.

5.1 Before the first start

- The UPS is placed as described in Section 4.3 and its vents are clear.
- The input is plugged into a grounded receptacle on a branch circuit of the right rating (Table 4-2).
- The loads are switched off and their total does not exceed the UPS rating.
- Long-backup systems: the battery cabinets are connected and their breakers closed (Section 4.7).
- The battery capacity and charge current are set when cabinets are added (Section 5.12.2).

5.2 Turning the UPS on and off at a glance

The UPS has two keys (Figure 2-4). *Press* means a short press; *hold* means keep the key pressed for the time given, until the UPS beeps or the LEDs change.

TABLE 5-1 On and off — what to press

I want to	Do this	Then the panel shows
Switch on — utility present	Plug the UPS in (or close its branch breaker). No key: the UPS starts by itself. If INV stays off, press ON/OFF once.	REC flashing, then REC and INV steady green
Switch on — no utility (cold start)	Press ON/OFF once to wake the LCD, then within a few seconds hold ON/OFF 5 s.	INV green, BAT yellow, buzzer beeps
Stop the inverter — the loads stay powered by the utility	Hold ON/OFF 2.5 s.	BYP yellow, INV off. The receptacles are still live.
Start the inverter again	Press ON/OFF once.	INV steady green, BYP off
Switch off completely — utility present	1 · Hold ON/OFF 2.5 s. 2 · Unplug the UPS (or open its breaker). 3 · Long-backup: open the cabinet breakers.	LCD dark after a few seconds
Switch off — on battery	Hold ON/OFF 2.5 s.	Output off, then LCD dark

NOTICE

ON/OFF alone never removes power from the receptacles while the utility is present: the inverter stops, and the load is fed by the utility through the bypass, without protection. To make the receptacles dead, unplug the UPS as well.

5.3 Starting on utility power

1. Check that the loads are switched off. On long-backup systems, close the battery-cabinet breaker.
2. Switch the utility supply on: plug the UPS in, or close its branch breaker.
   You see: the fans start and the LCD lights.

3. Wait. The UPS starts on bypass by itself.
   You see: REC (item 3 in Figure 2-4) flashing green, BYP (item 2) steady yellow.
4. The rectifier is ready and the inverter starts by itself.
   You see: REC steady green, INV (item 4) flashing green.
5. After a few seconds the UPS is in normal mode.
   You see: REC and INV steady green, BYP off, AC/DC/AC lit on the LCD (Figure 5-1).
6. Switch the loads on one at a time, the largest first. Check the load reading on LCD page 1 (Figure 5-2).
7. If the inverter does not start by itself, press ON/OFF (item 6) once.

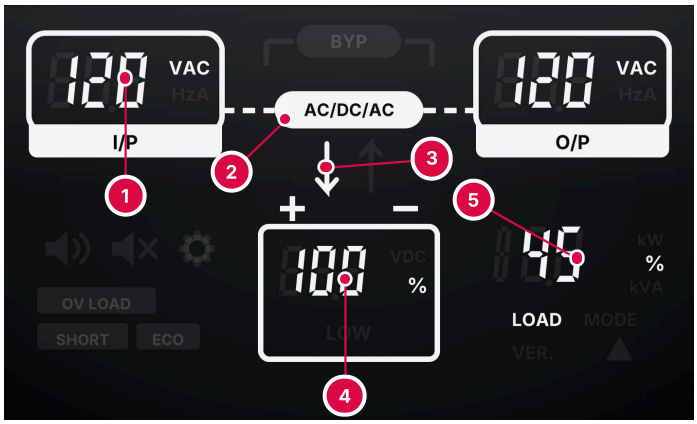

1. Input 120 V AC
2. AC/DC/AC lit — the inverter feeds the load
3. Battery arrow down — the battery is charging
4. Battery capacity 100 %
5. Load 45 % of the rating

FIGURE 5-1 Normal online operation: 120 V in and out, battery 100 %, load 45 %

5.4 Starting on battery (cold start)

Use the cold start when there is no utility power and the load must run from the battery.

1. Long-backup systems: make sure the battery-cabinet breaker is ON.
2. Press ON/OFF once.
   You see: the LCD lights.
3. Within a few seconds, press and hold ON/OFF for 5 s.
   You see: INV green and BAT yellow (item 5 in Figure 2-4); the buzzer beeps. The UPS runs in battery mode and feeds the load.
4. Switch the loads on one at a time. The runtime is that of Table 7-1.

5.5 Transferring to bypass and back

1. **To bypass:** in normal mode hold ON/OFF for 2.5 s.
   You see: the load moves to the bypass — BYP yellow, INV off, BYP lit on the LCD.
2. **Back to the inverter:** press ON/OFF.
   You see: the inverter starts and takes the load again — INV steady green, BYP off.

5.6 ECO mode

Set the system mode to E in menu 123 (Figure 5-15). With good utility power the load runs on the bypass (higher efficiency, no protection from disturbances); when the utility leaves its window the inverter takes over. In ECO mode BYP is yellow, INV flashes green and the ECO icon is lit (item 12 in Figure 2-5). Set the mode back to S for full online protection.

5.7 Silencing the alarm

On LCD page 1 hold FUNC for 1.5 s to mute the buzzer; repeat to unmute it. The crossed speaker (item 8 in Figure 2-5) shows that the buzzer is silenced.

5.8 Shutting down

IN NORMAL MODE (UTILITY PRESENT)

1. Save your work and switch off the loads.
2. Hold ON/OFF for 2.5 s.
   You see: INV off, BYP steady yellow: the inverter is off and the load is on bypass.
3. Switch the utility supply off: unplug the UPS or open its branch breaker.
   You see: models with internal batteries switch off completely after a few seconds; the LCD goes dark.
4. Long-backup systems: open the battery-cabinet breaker.

IN BATTERY MODE (UTILITY FAILED)

1. Save your work and switch off the loads.
2. Hold ON/OFF for more than 2.5 s.
   You see: the output goes off, then the LCD goes dark: the UPS is off.

RESTARTING THE UPS

To restart — for example to apply new settings — shut the UPS down completely as above, wait until the LCD is dark, then start it again (Section 5.3).

> ***NOTICE***
>
> Switch the loads off before starting the UPS, and switch them on one at a time once the UPS runs in normal mode. Switch off all loads before shutting the UPS down.

5.9 Everyday use

DURING A POWER OUTAGE

1. The UPS switches to battery with no break: the load keeps running, BAT lights and the buzzer beeps.
2. Silence the buzzer if you wish: hold FUNC for 1.5 s on LCD page 1.
3. Watch the battery: the LCD shows the battery capacity in % in the battery area.
4. If the outage lasts, save work and shut the loads down in order, well before the battery is exhausted. With the SNMP-M card the servers can do this by themselves.
5. At the end of discharge the UPS switches its output off to protect the battery.

WHEN THE UTILITY RETURNS

The UPS restarts by itself and recharges the battery. A full recharge takes at least 12 hours: until then the runtime available is shorter.

GOOD HABITS

- Leave the UPS switched on all the time: it protects the load and keeps the battery charged.
- Switch new equipment on one at a time, and check the load reading afterwards.
- Look at the panel once a week: normal operation is REC and INV steady green, no alarm.
- Before a long shutdown (vacation, site closed) shut the UPS down completely (Section 5.8); recharge it within 4 to 6 months.

5.10 What the panel tells you

TABLE 5-2 What you see, what it means, what to do

What you see	Meaning	What to do
REC and INV steady green; AC/DC/AC lit	Normal online operation	Nothing.
REC flashing, BYP steady	The UPS is starting on bypass	Wait: the inverter starts by itself.
INV green, BAT yellow, buzzer beeps	Utility failure: on battery	See Section 5.9. Save work if the outage lasts.
Battery area shows LOW	Battery nearly exhausted	Shut the loads down now.
BYP steady, INV off	Load on bypass — transferred by hand, overload, or a fault	Read the code on page 4 (Table 9-3); remove the cause; press ON/OFF to restart the inverter.
BYP flashing	Bypass alarm: utility out of range	Check the utility; codes 6 and 7.
BAT flashing	No battery, or battery alarm	Check the battery cables and breaker; code 1.
INV flashing, BYP steady, ECO icon	ECO mode	Normal if ECO (system mode E) was set.
OV LOAD lit	Overload	Reduce the load below the rating; codes 8, 18, 19.
SHORT lit	Output short circuit	Disconnect all loads, find the faulty one; code 11.
Triangle with a number	A warning or fault code	Look the code up in Table 9-3.

5.11 Reading the LCD pages

Press FUNC to step through the four pages. The pictures show example readings (input and output set to 110 V).

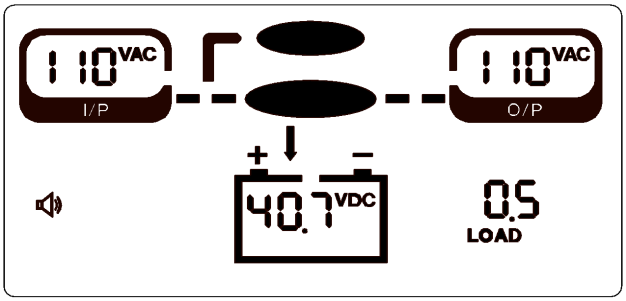

FIGURE 5-2 Page 1: input and output voltage, battery voltage, load

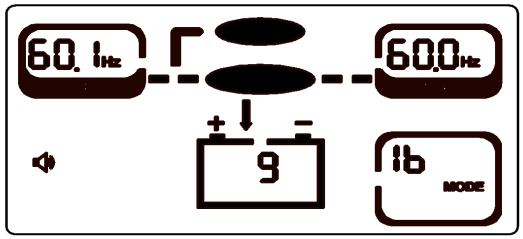

FIGURE 5-3 Page 2: frequencies, battery capacity setting, model

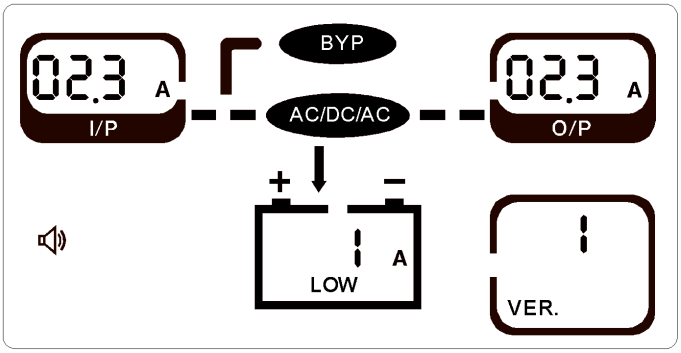

FIGURE 5-4 Page 3: currents, battery current, firmware version

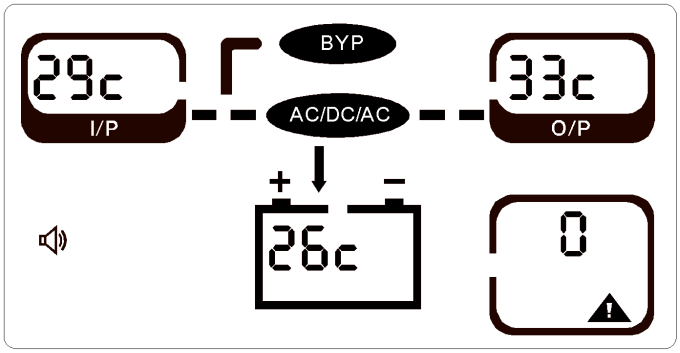

FIGURE 5-5 Page 4: temperatures, alarm code

TABLE 5-3 LCD pages

Page	Shows
1	Input voltage (110 V AC in the example), output voltage (110 V AC), battery voltage (40.7 V DC), load (0.5 kVA). The load is shown in turn as %, kW and kVA. Hold FUNC 1.5 s here to silence the buzzer.
2	Input frequency (60 Hz), output frequency (60 Hz), battery capacity setting (9 Ah; 9 to 200 Ah), system model (MODE): 1b = 1 kVA standard model; L = long-backup model, b = standard model (1b, 1L, 2b, 2L, 3b, 3L).
3	Input current (2.3 A), output current (2.3 A), battery current (1 A; arrow down: charging, arrow up: discharging, no arrow: no battery), firmware version (VER.; V1.17 is shown as "v1", then "17").
4	Input and output temperature (29 °C, 33 °C), battery temperature (26 °C), alarm code (0 = no alarm). Hold FUNC 1.5 s here to clear a fault manually.

5.12 Settings

The settings are made with the two keys. The rule is always the same (Table 5-4).

TABLE 5-4 Keys in the settings

Key	In the settings
Hold ON/OFF + FUNC together 2.5 s	Open the settings — or leave them, without saving, from any page
FUNC	Change the value shown (step to the next choice)
ON/OFF	Confirm the value and go to the next page

5.12.1 Main page — choosing a menu

1. Open the settings: hold ON/OFF and FUNC together for 2.5 s.
   You see: "SETTING" at the bottom of the LCD, the gear icon, and all LEDs flash.
2. On the main page, press FUNC until the menu number you want shows in the input field (Table 5-5), then press ON/OFF.
3. On each page, press FUNC until the value you want is shown, then press ON/OFF to confirm it and move on.
4. After the last page the LCD shows the values set; press ON/OFF to exit.
5. Restart the UPS (Section 5.8): the new settings take effect after the restart.

TABLE 5-5 Menus on the main page

Menu	For	Pages
123	Rated values and battery	Voltage · frequency · battery capacity · charge current · system mode · summary (Section 5.12.2)
232	RS-232 port	Baud rate · ID · protocol · summary (Section 5.12.3)
234	SNMP card in the intelligent slot	Baud rate · ID · protocol · summary (Section 6.2)
485	RS-485 line	Baud rate · ID · protocol · summary. The tower has no RS-485 port on its rear panel: leave this menu as it is unless AEC service asks otherwise.
567	Setting recovery	Restores the factory settings.

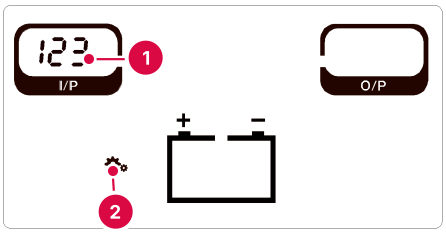

1 Menu number
2 Gear — settings open

FIGURE 5-6 Main page, menu 123

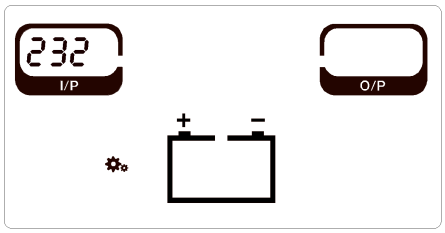

FIGURE 5-7 Main page, menu 232

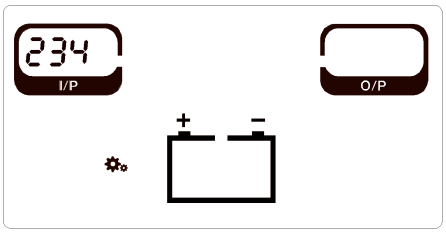

FIGURE 5-8 Main page, menu 234

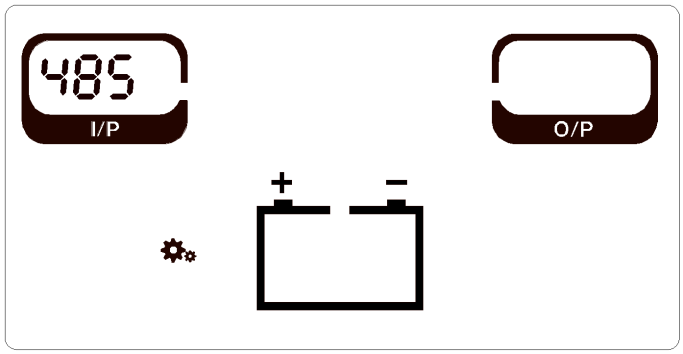

FIGURE 5-9 Main page, menu 485

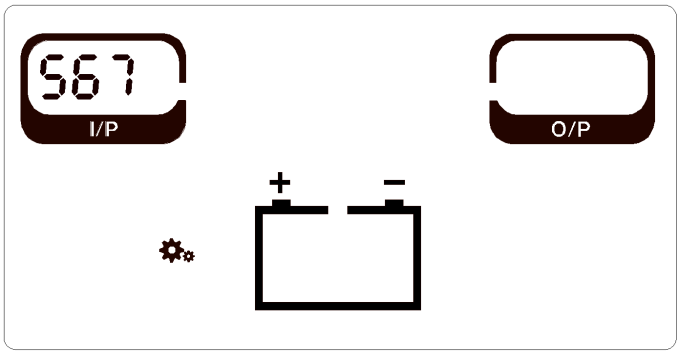

FIGURE 5-10 Main page, menu 567

5.12.2 Menu 123 — rated values and battery

The pages follow one another in this order. On each, FUNC changes the value and ON/OFF confirms it.

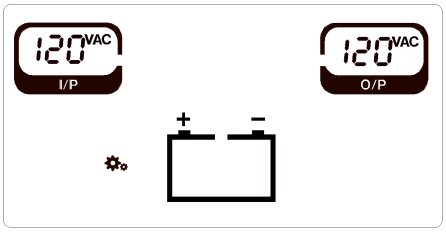

FIGURE 5-11 1 · Voltage: 100, 110, 115 or 120 V AC

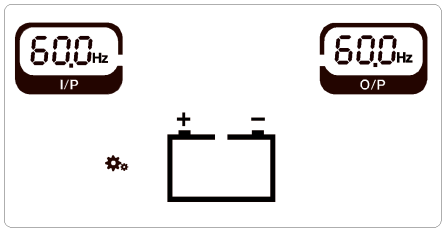

FIGURE 5-12 2 · Frequency: 50 or 60 Hz

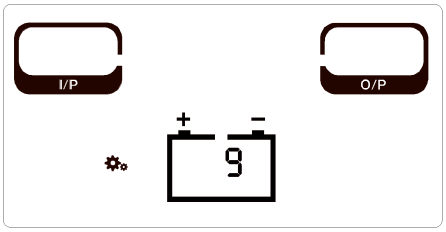

FIGURE 5-13 3 · Battery capacity, Ah

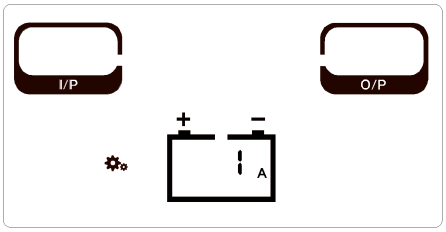

FIGURE 5-14 4 · Charge current, A

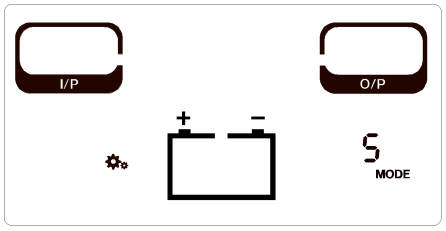

FIGURE 5-15 5 · System mode: S or E

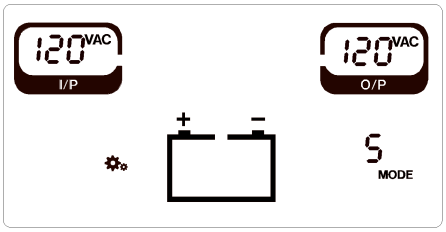

FIGURE 5-16 6 · Summary of the values set

TABLE 5-6 Menu 123 pages

Page	How
1 · Input / output voltage	One value for input and output: 100, 110, 115 or 120 V AC. In the US use 120 V (or the nominal voltage of your site).
2 · Input / output frequency	50 Hz or 60 Hz — the rated frequency of input and output together. In the US leave 60 Hz: the input window and the specifications are given for 60 Hz ±5 Hz.
3 · Battery capacity	The total installed capacity in Ah: internal batteries plus cabinets (Table 4-4). Range 9 to 200 Ah.
4 · Charge current	Standard model: 1 A. Long-backup model: 1, 2, 3, 4, 5, 6, 7 or 8 A — observe the minimum capacity of Section 4.7.
5 · System mode	S — normal (online). E — ECO (Section 5.6).
6 · Summary	The LCD shows the values set; press ON/OFF to exit. They apply after the UPS restarts.

EXAMPLE — FERRUS 2K WITH ONE BAT0848 BATTERY CABINET

The internal battery is one string of 4 × 12 V 9 Ah (9 Ah). The BAT0848 adds two strings of 4 × 12 V 9 Ah — 18 Ah. Total: 27 Ah.

1. Hold ON/OFF + FUNC 2.5 s. On the main page select 123 with FUNC (Figure 5-6) and confirm with ON/OFF.
2. Voltage page: 120 V (Figure 5-11) — ON/OFF.
3. Frequency page: 60 Hz (Figure 5-12) — ON/OFF.
4. Battery capacity: press FUNC until 27 Ah, or the nearest value, is shown — ON/OFF.
5. Charge current: 4 A (the battery is at least 20 Ah but below 40 Ah) — ON/OFF.
6. System mode: S (normal online, Figure 5-15) — ON/OFF. Press ON/OFF again on the summary page to exit.
7. Restart the UPS. On LCD page 2 check the battery capacity shown (Figure 5-3).

5.12.3 Menus 232 and 485 — serial communication

After 232 (or 485) on the main page, the pages are the same as for menu 234 (Section 6.2). The values set on the UPS must match those of the software or the card that reads it (Chapter 6).

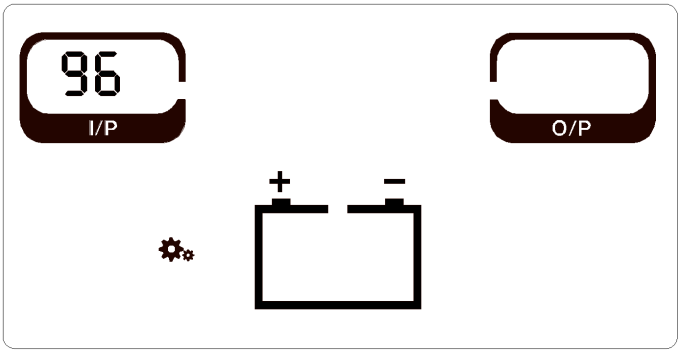

FIGURE 5-17 1 · Baud rate (96 = 9,600 shown)

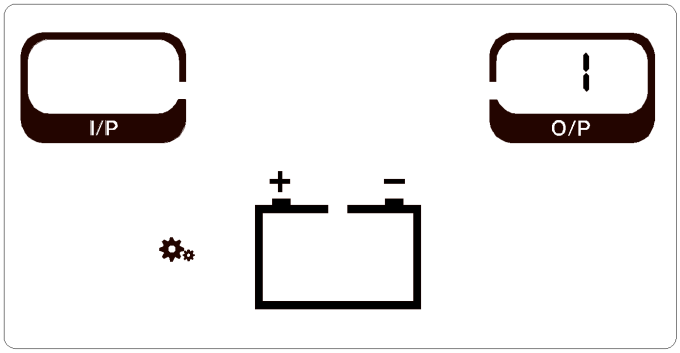

FIGURE 5-18 2 · ID, 1 to 32

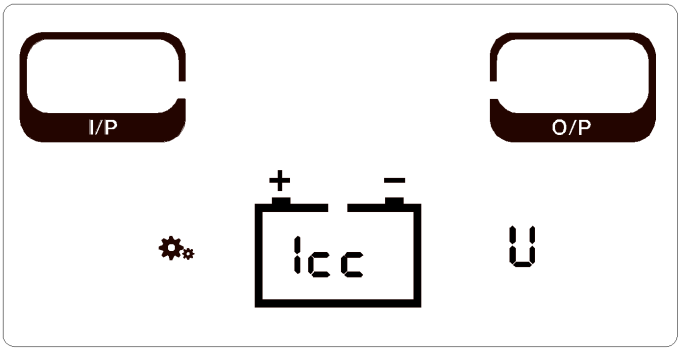

FIGURE 5-19 3 · Protocol (1cc shown)

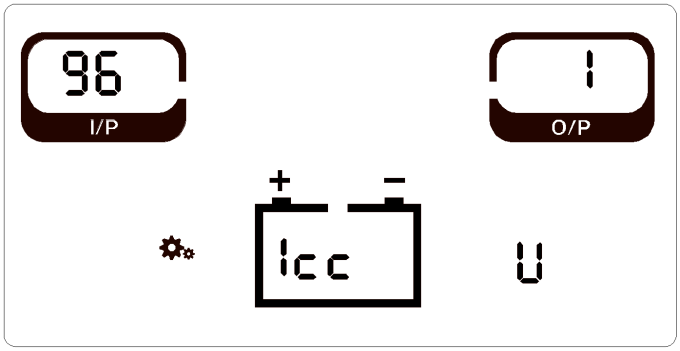

FIGURE 5-20 4 · Summary of the values set

TABLE 5-7 Communication pages (menus 232, 234 and 485)

Page	How
1 · Baud rate	12 = 1,200 · 24 = 2,400 · 48 = 4,800 · 96 = 9,600 · 192 = 19,200 baud. ON/OFF confirms and goes to the ID.
2 · ID (address)	1 to 32. ON/OFF confirms and goes to the protocol.
3 · Protocol	0cc Modbus · 1cc RTU · 2cc NetAgent. ON/OFF confirms and finishes.
4 · Summary	The LCD shows the values set; press ON/OFF to exit. They apply after the UPS restarts.

CHAPTER 6

06 Communication and monitoring

The RS-232 and USB ports, the SNMP-M network card and the dry-contact card in the intelligent slot, and the EPO input.

TABLE 6-1 Communication ports

Port	Use
RS-232	DB9 on the rear panel (item 6), standard. For monitoring software: protocol, baud rate (1,200 to 19,200) and ID (1 to 32) set in menu 232 (Section 5.12.3).
USB	Optional, on the rear panel (item 5), for monitoring software.
Intelligent slot	One slot (item 4) for an optional card: SNMP-M network card or DRYCNT dry-contact card.
EPO	Two-pin terminal (item 8), normally closed: opening the loop turns the output off (Section 6.5).
RS-485	No RS-485 port on the tower's rear panel. Menu 485 sets the RS-485 line of the firmware; leave it as it is.

6.1 SNMP-M network card

The SNMP-M card connects the UPS to the network: web pages, SNMP v1/v2c/v3, Modbus TCP/IP and MQTT. It reports the UPS status and alarms and can shut down servers on a utility failure. Fit it in the intelligent slot (item 4 in Figure 2-6, Figure 2-7, Figure 2-8) with the UPS switched off.

TABLE 6-2 SNMP-M card indicators

LED	State	Meaning
PWR (green)	On · Off	Card powered · not powered
SYS (red)	Off · Flashing · On	System normal · general alarm · serious alarm
DATA (yellow)	Off · Flashing	Communication with the UPS normal · abnormal

⚠ CAUTION

The card's default web accounts (admin, full rights; user, view only) and their passwords are given by AEC technical service. Change both passwords at the first login.

6.2 Setting up the SNMP-M card

The card talks to the UPS through the UPS's RS-232 line, which it shares with the intelligent slot. The card and the UPS must use the same settings: Megtec protocol on the card, 2,400 baud and address 1 on both. The UPS side is set in menu 234 (Figure 5-8).

1. Fit the card in the intelligent slot and connect it to the network with an RJ45 cable. The green PWR LED lights.
2. On a PC in the same network, run IPSearch (AEC app › Support › Downloads › SNMP › SNMP-M). It lists the card with its IP and MAC address.
3. Select the card › **NetWork set** › **Static IP**: enter a free IP address, the subnet mask and the gateway (ask your IT department), or choose **Obtain IP** for DHCP. Press **Set**.

4. Press **Web page** (or type the card's IP in a browser) and log in as admin. Change the passwords.
5. In the card's UPS settings (**Sys Set › Device**) choose protocol **Megtec**, port **Uart · Port A**, baud rate **2400**, address **1**. With the card set to Megtec it normally reads the UPS by itself: the yellow DATA LED stops flashing.
6. Only if the card still shows "UPS communication failure": check menu 234 on the UPS — steps 7 to 12.
7. Hold ON/OFF and FUNC together for 2.5 s. The gear and SETTING appear and all LEDs flash.
8. Press FUNC until the main page shows **234** (Figure 5-8). Press ON/OFF.
9. Baud rate: check it reads **24** (2,400 baud, Figure 6-1). If not, press FUNC until 24. Press ON/OFF.
10. ID: use **1** (Figure 5-18). Press ON/OFF.
11. Protocol: leave it as it is — the card's Megtec setting works with it. Press ON/OFF.
12. Summary: check the values and press ON/OFF to leave. Restart the UPS (Section 5.8): the new values apply after the restart. Plan the restart and protect the load first.
13. Set up e-mail alarms and, if used, SNMP traps (port 162) or Modbus TCP. The SNMP-M Network Card User Manual describes the card's web interface.

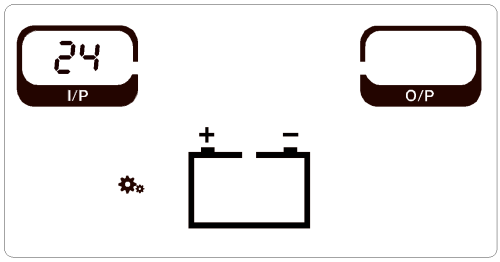

FIGURE 6-1 Menu 234, baud rate page: 24 = 2,400 baud

NOTICE

The RS-232 port and the intelligent slot share the same communication line. Unplug any RS-232 cable while the card is fitted, and use UPS View on RS-232 only with the card removed.

6.3 UPS View software

UPS View (version 2.0.7) monitors and sets up one UPS from a Windows PC through a direct cable, without the network card. Download UPSView_V2.0.7.rar from the AEC app (Support › Downloads › SNMP › SNMP-M), unpack it and run the program inside: no installation is needed.

TABLE 6-3 Connecting UPS View

Connection	How
RS-232	A serial cable from the UPS's RS-232 port (rear-panel item 6) to the PC's COM port: pin 2 TXD, pin 3 RXD, pin 5 GND. Use a USB-to-serial adapter on PCs without a COM port.
USB	A standard USB cable where the USB port (item 5) is fitted; some PCs need a driver.

1. On the UPS, open menu 232 (Section 5.12.3) and set the protocol to 0cc (Modbus) or 1cc (RTU), and note the baud rate and the ID. Restart the UPS.
2. Connect the cable to the UPS's RS-232 port, or to the USB port where fitted.
3. Start UPS View. Choose the Equip Type **1/1(1-3kVA)**, the Modbus mode that matches the UPS protocol (ASCII for 0cc, RTU for 1cc), the baud rate set on the UPS and address 1 (the ID set on the UPS).

4. Choose the PC's COM port (Windows Device Manager › Ports).
5. UPS View shows the live data, the status, the alarms and the settings of the UPS.

NOTICE

UPS View talks Modbus only. While the UPS protocol is set for the network card (Megatec type) the RS-232 port does not answer UPS View. "Megtec" is the protocol name on the SNMP-M card's web page only.

✓ TIP The AEC UPS View Monitor User Manual (AEC-UM-UPSV-US) describes every UPS View page; the SNMP-M Network Card User Manual describes the card's web interface. Both are in the AEC app, Support › Downloads › SNMP › SNMP-M.

6.4 Dry-contact card

The DRYCNT dry-contact card fits the intelligent slot. It gives the UPS status as contacts and accepts a remote shutdown input, on a DB9 port (Figure 6-2) or a 9-pole terminal block (Figure 6-3) — two versions of the card. Maximum current per output: 1 A. The contacts need an external supply of 12–24 V DC.

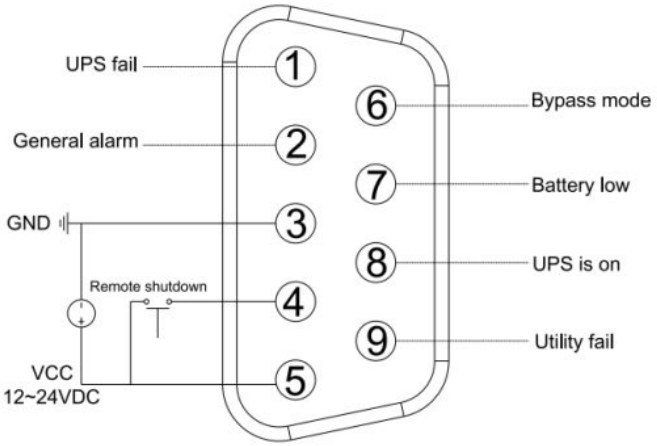

FIGURE 6-2 DB9 version — pins and wiring

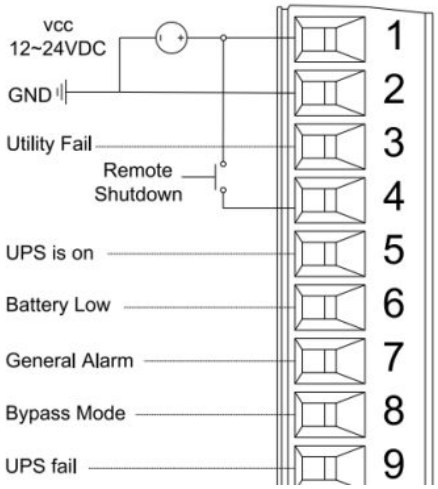

FIGURE 6-3 Terminal-block version — pins and wiring

TABLE 6-4 Dry-contact card pins

Signal	DB9 pin	Terminal	Function
UPS fail	1	9	Open (NO) to the common if the UPS has a fault; otherwise closed (NC).
General alarm	2	7	Open (NO) to the common on any alarm; otherwise closed (NC).
GND	3	2	Ground of the external power supply.
Remote shutdown	4	4	Close the contact to activate: with utility present the rectifier and inverter stop; in battery mode the UPS switches off completely.
Power supply (common)	5	1	External supply, 12–24 V DC, common of the contacts.
Bypass mode	6	8	Closed (NC) to the common when the UPS is on bypass; otherwise open (NO).
Battery low	7	6	Open (NO) to the common when the battery is low; otherwise closed (NC).

Signal	DB9 pin	Terminal	Function
Normal mode ("UPS is on")	8	5	Closed (NC) to the common in normal mode; otherwise open (NO).
Utility fail	9	3	Open (NO) to the common on utility failure; otherwise closed (NC).

6.5 Emergency power off (EPO)

The EPO terminal is on the rear panel (item 8 in Figure 2-6, Figure 2-7 and Figure 2-8). Its two terminals are shorted in normal use. Opening them stops the rectifier and the inverter output at once, and LCD page 4 shows code 2. Wire a remote normally closed emergency switch to them if required (Figure 6-4).

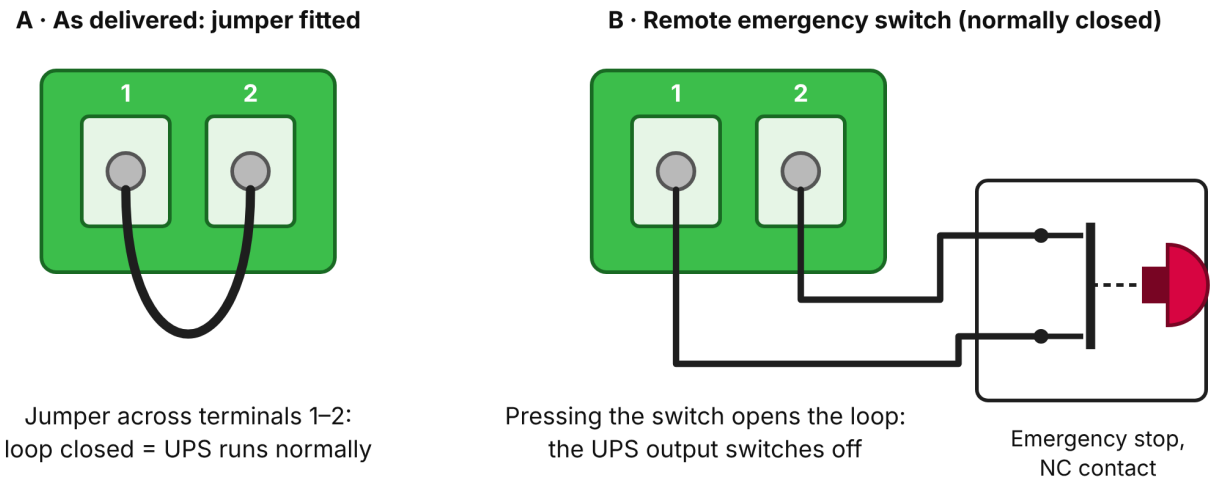

FIGURE 6-4 EPO terminal: as delivered (A) and with a remote emergency switch (B)

WIRING A REMOTE EMERGENCY SWITCH

1. Shut the UPS down and unplug it (Section 5.8).
2. Remove the jumper from EPO terminals 1–2.
3. Connect the two wires of the normally closed (NC) contact of the emergency switch to terminals 1 and 2.
4. Start the UPS and check: pressing the switch must turn the output off with code 2.

RESTORING THE OUTPUT AFTER AN EPO

1. Remove the cause and reset the emergency switch, or refit the jumper: the loop must be closed again.
2. Shut the UPS down completely, then restart it (Section 5.3).

> ⚠ ***CAUTION***
>
> The EPO cuts the power to every load at once. Use it only in an emergency.

CHAPTER 7

07 Battery and runtime

Runtimes with the internal batteries and with one to four BAT battery cabinets, and the battery data.

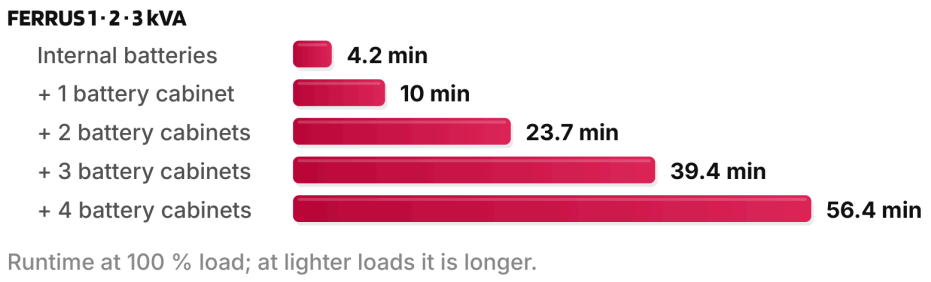

FIGURE 7-1 Backup time at full load, FERRUS 1K, 2K and 3K

TABLE 7-1 Backup time by load (minutes; new, fully charged batteries, 77 °F) — the same for FERRUS 1K, 2K and 3K with their matching cabinets

Set-up	100 %	75 %	50 %	40 %	30 %	25 %	20 %	10 %
Internal batteries	4.2	6	10	13.2	18.9	25.1	31.3	74.6
+ 1 battery cabinet	10	14.4	23.7	31.3	44.9	59.8	74.6	177
+ 2 battery cabinets	23.7	34.1	56.4	74.6	107	142	177	422
+ 3 battery cabinets	39.4	56.8	93.6	124	177	236	294	700
+ 4 battery cabinets	56.4	81.3	134	177	254	338	422	1,003

Runtimes at 77 °F (25 °C) with new, fully charged batteries. Cold, hot, aged or partly charged batteries give less.

TABLE 7-2 Battery data

Item	FERRUS 1K	FERRUS 2K	FERRUS 3K
Internal battery	2 × 12 V 9 Ah	4 × 12 V 9 Ah	6 × 12 V 9 Ah
Nominal DC voltage	24 V DC	48 V DC	72 V DC
Battery current, max.	50 A	50 A	50 A
Matching cabinet	BAT0424	BAT0848	BAT1272

All models: charger 1 A (standard model) or 1–8 A (long-backup model); recharge at least 12 h for a full charge.

CHAPTER 8

08 Maintenance

Routine checks, battery care and the battery test, component life, replacing the internal battery, battery disposal, storage and transport.

8.1 Maintenance schedule

TABLE 8-1 Maintenance schedule

Interval	Task
Every 6 months	Check the UPS status (Section 9.1): no fault code or alarm, the UPS in normal mode (not on bypass), the battery not discharging with utility present. Check that the vents are clear and the fans run.
Every 6 months	Clean the outside with a dry cloth (UPS switched off and unplugged).
Every 4–6 months, if unused	Recharge the battery for at least 12 hours.
Every 2 months, hot climates	Discharge and recharge the battery (at least 12 hours of charge).
3–5 years	Replace the batteries as a full set, same type and number (Section 8.5).

8.2 Battery care and the battery test

- The batteries are sealed, maintenance-free valve-regulated lead-acid (VRLA) blocks of 12 V 9 Ah.
- Charge for at least 12 hours before first use and after a long discharge.
- Battery life is normally 3 to 5 years; it is shorter at high temperature. It is best at 68–77 °F (20–25 °C). If a battery is found in bad condition, replace the set earlier.
- Replace all batteries at the same time, with the same number and type. Do not replace a single battery.
- **Battery test:** the UPS checks its battery by running on it for 20 seconds. If the test finds a problem, code 13 appears on LCD page 4 (Table 9-3).

8.3 Component life

Some components wear with time and heat. Planned replacement, before they fail, keeps the UPS available.

TABLE 8-2 Typical service life at 77 °F (25 °C)

Component	Typical life	Action
Cooling fans	5–7 years	Replace when worn or at the end of the period; a failed fan raises code 17.
DC bus electrolytic capacitors	7–10 years	Replaced by AEC service.
AC filter capacitors	5–7 years	Replaced by AEC service.
VRLA batteries (5-year design life)	3–5 years	Replace as a full set (Section 8.5).

Life is shorter at higher temperature, in dusty rooms and under continuous heavy load. The figures are typical of the industry for online UPS; AEC service plans the replacement during preventive maintenance.

8.4 Battery life and temperature

VRLA batteries age faster in heat. As a rule of thumb, their service life roughly halves for every 18 °F (10 °C) above 77 °F (25 °C).

TABLE 8-3 Typical effect of temperature on VRLA battery life

Average room temperature	Relative life	Typical life
68–77 °F (20–25 °C)	100 %	3–5 years
86 °F (30 °C)	about 70 %	2–3.5 years
95 °F (35 °C)	about 50 %	1.5–2.5 years
104 °F (40 °C)	about 35 %	1–1.7 years

SIGNS THAT THE BATTERIES NEED REPLACING

- The runtime is clearly shorter than in Table 7-1 with a fully charged battery.
- Code 13 (battery self-test) appears.
- A block is swollen, cracked or leaking — switch the UPS off and contact AEC service.
- The batteries are older than 3–5 years.

8.5 Replacing the internal battery

⚠ DANGER

Do not replace the internal battery while the UPS is running: hazard to personnel. Battery replacement must be done by qualified personnel.

1. Shut the UPS down (Section 5.8) and unplug it. Long-backup systems: open the cabinet breakers and unplug the battery cable.
2. Remove the UPS cover.
3. Remove the battery clamps.
4. Disconnect the battery cables one by one, then take the batteries out one by one.
5. Fit the new batteries and reconnect the cables as shown in Appendix B (Figure B-1 for the 1K, Figure B-2 for the 2K and 3K).
6. Refit the clamps and the cover. Charge for at least 12 hours.

8.6 Battery handling and disposal

⚠ WARNING

- Before disposing of batteries, remove jewelry, watches and other metal objects. Wear rubber gloves and boots; use tools with insulated handles.
- Replace connection cables only with original parts from AEC or its authorized service centers: an undersized cable can overheat or spark and cause a fire.
- Do not dispose of batteries in fire: they can explode. Do not open or damage them: the released electrolyte is toxic and harmful to skin and eyes.
- Never short the battery positive and negative terminals: risk of electric shock or fire.
- The battery circuit is not isolated from the input: hazardous voltage can exist between the battery terminals and ground. Check that there is no voltage before touching the batteries.
- Even with the input disconnected, the internal circuits stay connected to the batteries. Before any maintenance or repair, open the breaker of the battery cabinet or disconnect the jumper wires between the batteries.
- Battery work must be done by qualified personnel who know batteries. No other persons should handle the batteries.
- Recycle used batteries according to local regulations.

8.7 Storage and transport

- Store the UPS indoors, dry, at −4 to +158 °F (−20 to +70 °C); the battery lasts longest stored at 32–77 °F (0–25 °C).
- Recharge a stored UPS every 4 to 6 months.
- Transport the UPS in its original packaging, upright.

CHAPTER 9

09 Troubleshooting

Checking the UPS, common symptoms, the fault and warning codes and what to report.

✓ TIP **AEC technical support — 24/7.** WhatsApp and phone +1 786 553 2100, always available · e-mail service.us@aecups.com. Send the model, the serial number and a photo of the display and of the alarm: it is the fastest way to a solution.

9.1 Checking the UPS

Check the UPS every six months:

- Is a code shown, or is the UPS sounding an alarm?
- Is the UPS running on bypass? Normally it runs in normal (inverter) mode. If it is on bypass, contact AEC service.
- Is the battery discharging? With normal utility power the battery should not discharge. If the UPS is in battery mode, contact AEC service.

9.2 Symptoms and remedies

TABLE 9-1 Common symptoms

Symptom	What to do
The UPS does not start; the LCD stays dark	Check that the input plug is in a live receptacle and its breaker is on. Press the input surge protector (rear-panel item 2) to reset it. Without utility power, start from the battery (Section 5.4).
The LCD is on but there is no output	The inverter is not started: press ON/OFF. If a code is shown, look it up in Table 9-3.
The UPS runs on battery although the utility is present	The input surge protector has tripped (code 4), line and neutral are reversed (code 5), or the input is outside 55–150 V (90–150 V at full load).
The building breaker trips when the UPS is switched on	The branch circuit is smaller than Table 4-2 requires, or too many loads start at once. Use a circuit of the right rating and switch the loads on one at a time.
An alarm sounds when the loads are switched on	Start-up current or overload: switch the loads on one at a time, the largest first; keep the total within the rating.
The load is on bypass and does not return	Read the code; after an overload, reduce the load: the UPS returns to the inverter by itself (code 19). After 5 transfers in an hour it stays on bypass (code 10).
The 3K load on one receptacle group has no power	An output protector (rear-panel item 10) has tripped: remove the overload and press the protector to reset it.
The runtime is shorter than expected	The battery is not fully charged: charge for at least 12 hours. The UPS is overloaded: check the load reading and remove some devices. The battery is aged: replace batteries older than 3–5 years (AEC service).
The monitoring software shows no data	Check the RS-232 or USB cable; the baud rate, ID and protocol set in menu 232 must match the software (Section 5.12.3). With the SNMP-M card fitted, unplug the RS-232 cable (Section 6.2).

9.3 Fault and warning codes

When something is wrong the LCD shows the warning triangle with a number (item 14 in Figure 2-5), and the buzzer may sound. The number is the code.

1. Press FUNC until LCD page 4 is shown (Figure 5-5). The number beside the triangle is the code; 0 means no alarm.
2. Find the code in Table 9-3 and do what the last column says.
3. When the cause is removed, clear the code: on page 4 hold FUNC 1.5 s.
4. If the code comes back, or it is a Fault, write down the code and call AEC technical support (24/7, +1 786 553 2100).

TABLE 9-2 The two kinds of code

Type	What it means
Warning	The UPS keeps working, but something needs attention — the utility, the load, the battery or the ventilation. Most warnings clear by themselves when the cause is removed.
Fault	A part of the UPS or of the battery has failed. The UPS protects itself; the load is moved to the bypass when the utility is good. Call AEC service.

TABLE 9-3 Fault and warning codes

Code	Type	Shown for	Cause — what the UPS does	What to do
1	Warning	Battery not connected	Battery breaker open or battery cable unplugged: no backup if the utility fails.	Close the cabinet breaker; check the battery cable and its plug in the external battery connector. Internal battery only: call AEC service.
2	Warning	Emergency power off (EPO)	The EPO loop is open: the output is off.	Close the loop — refit the jumper across EPO terminals 1–2, or reset the remote EPO switch — then shut the UPS down and restart it (Section 6.5).
3	Warning	Inverter capacity low	The load is above the capacity the inverter can supply.	Switch off non-essential loads, or use a UPS of higher rating.
4	Warning	Input voltage abnormal	Utility failure, or the input surge protector has tripped: the UPS runs on battery.	Check the utility and the branch breaker. Utility good but still on battery: press the surge-protector reset on the rear panel.
5	Warning	Line and neutral reversed	The receptacle feeding the UPS has line and neutral swapped.	Have an electrician correct the receptacle wiring.
6	Warning	Bypass voltage abnormal	The utility is outside the bypass range, or off: the UPS cannot transfer to bypass.	Check the utility voltage at the receptacle.
7	Fault	Bypass failure	Bypass input abnormal: there is no backup path if the inverter stops.	Restore the utility supply. Utility normal: call AEC service.
8	Warning	Overload on bypass	The load is on bypass and above the rating.	Reduce the load below 95 % of the rating.
9	Warning	Bypass overload timeout	The overload on bypass lasted too long: the UPS switched the output off.	Reduce the load, restart the UPS (Section 5.3), then switch the loads on one at a time.
10	Warning	Too many transfers	More than 5 transfers between inverter and bypass in 1 hour: the UPS stays on bypass.	Find and remove the overloading or short-circuited load; restart the UPS, or wait for the inverter to restart by itself.

Code	Type	Shown for	Cause — what the UPS does	What to do
11	Warning	Output short circuit	A short circuit on the output — a load, a cord or a power strip.	Unplug all loads and check the cords; reconnect the loads one at a time to find the faulty one.
12	Warning	End of discharge	Battery exhausted after a long outage: the output stays off until the utility returns.	Wait for the utility: the UPS restarts and recharges by itself. Next time, shut the loads down at code 21.
13	Fault	Battery self-test	The 20-second battery test found a problem.	Check the battery cables and connections and charge 12 h. If it comes back, replace the batteries (Section 8.5).
14	Fault	Rectifier	DC bus over- or under-voltage or unbalance, rectifier start failure, input fuse open.	Call AEC service.
15	Fault	Inverter	Inverter over- or under-voltage.	Call AEC service.
16	Warning	Rectifier over-temperature	Rectifier heatsink too hot, or its temperature sensor not connected.	Check that the fans run and the vents are clear; room within 32–104 °F (0–40 °C). If it comes back: AEC service.
17	Fault	Fan failure	One or more fans stopped, or a fan wire is loose.	Call AEC service.
18	Warning	Overload on inverter	The load is above the UPS rating.	Reduce the load below the rating.
19	Warning	Inverter overload timeout	The overload lasted too long: the load is moved to bypass, if the bypass is available.	Reduce the load below 95 %: the UPS returns to the inverter by itself.
20	Warning	Inverter over-temperature	Inverter heatsink too hot, or its temperature sensor not connected.	As code 16.
21	Warning	Battery low	On battery, and the battery is nearly exhausted.	Save your work and shut the loads down now, or restore the utility.
22	Warning	Input neutral lost	The neutral of the input is disconnected.	Check the receptacle and the input cord (electrician).
23	Fault	Bypass fan failure	One or more fans stopped, or a fan wire is loose.	Call AEC service.
24	Warning	Manual shutdown	Not a failure: the inverter was stopped with the ON/OFF key; the output is off or on bypass.	Nothing to fix. Press ON/OFF to start the inverter again.
25	Fault	Charger	No charger output: the battery is not being charged.	Call AEC service.
26	—	Not used	—	—
27	Warning	Input overcurrent	Abnormally high current into the rectifier.	Call AEC service.
28	Warning	Auxiliary power supply lost	Internal auxiliary supply abnormal.	Call AEC service.
29	Fault	UPS model	Model identification abnormal.	Call AEC service.
30	Fault	Output CT	Output current sensor connected in reverse (internal).	Call AEC service.

TABLE 9-4 Codes by topic

Topic	Codes	Check first
Utility and input	4 · 5 · 6 · 7 · 22 · 27	The receptacle, the branch breaker and the surge-protector reset
Load and output	3 · 8 · 9 · 10 · 11 · 18 · 19 · 24	The total load (LCD page 1), the cords and power strips
Battery	1 · 12 · 13 · 21 · 25	The battery breaker and cable; a 12-hour charge
Heat and fans	16 · 17 · 20 · 23	The vents, the fans and the room temperature
EPO and internal	2 · 14 · 15 · 28 · 29 · 30	The EPO loop; otherwise call AEC service

i NOTE When you report a fault, give: the UPS model and serial number, the fault and warning codes, the LEDs and the buzzer, the utility conditions, the load, and the battery set-up (long-backup models).

CHAPTER 10

10 Specifications

Electrical, mechanical and environmental data.

TABLE 10-1 FERRUS specifications by model

	FERRUS 1K	FERRUS 2K	FERRUS 3K
Power (VA / W)	1,000 / 1,000	2,000 / 2,000	3,000 / 3,000
Input			
Current, max.	10 A	20 A	30 A
Building breaker (= plug rating)	15 A	20 A	30 A
Connection	IEC C14 inlet, cord supplied	attached cord, straight-blade plug	attached cord, NEMA L5-30P plug
Output			
Current	8.3 A	16.6 A	25 A
Receptacles	6 × NEMA 5-15R	8 × NEMA 5-20R	6 × NEMA 5-20R + 1 × NEMA L5-30R
Battery			
Internal	2 × 12 V 9 Ah	4 × 12 V 9 Ah	6 × 12 V 9 Ah
DC voltage	24 V DC	48 V DC	72 V DC
Battery current, max.	50 A	50 A	50 A
External cabinets	1–4 × BAT0424	1–4 × BAT0848	1–4 × BAT1272
Mechanical			
W × D × H	5.6 × 8.6 × 13.9 in (142 × 218 × 353 mm)	7.5 × 12.6 × 15.8 in (190 × 319 × 400 mm)	7.5 × 12.6 × 15.8 in (190 × 319 × 400 mm)
Weight	16.5 lb (7.5 kg)	36.3 lb (16.5 kg)	45.2 lb (20.5 kg)

TABLE 10-2 Specifications common to all models

Item	Value
Input voltage · frequency	55–150 V AC (full load from 90 V; 70 % load from 70 V; 40 % load down to 55 V) · 60 Hz ±5 Hz, single-phase
Input power factor	> 0.99 at full load
Output voltage	100 / 110 / 115 / 120 V AC, set in menu 123
Output frequency · waveform	60 Hz (rated frequency setting 50 or 60 Hz) · pure sine wave
Efficiency, up to	93 %
Modes	online (S) · ECO (E) · bypass · cold start from battery
Charger	1 A standard model · 1–8 A long-backup model

Item	Value
Backup at 100 % · 50 % load	4.2 min · 10 min with the internal batteries (Table 7-1)
Recharge	at least 12 h for a full charge
Communication	RS-232 · intelligent slot (SNMP-M or dry contacts) · EPO · USB optional
Display	LCD, 4 LEDs, 2 keys
Operating environment	32–104 °F (0–40 °C) · RH < 95 % non-condensing · full power up to 3,300 ft (1,000 m) (Table 10-3)
Storage temperature	−4 to +158 °F (−20 to +70 °C)
Standards	UL 1778 standard; FCC Part 15, Class A
Warranty	3 years on the UPS · 2 years on VRLA batteries

Specifications are subject to change without notice.

TABLE 10-3 Output derating with altitude

Altitude	3,280 ft	4,920 ft	6,560 ft	8,200 ft	9,840 ft	11,480 ft	13,120 ft	14,760 ft	16,400 ft
(meters)	1,000	1,500	2,000	2,500	3,000	3,500	4,000	4,500	5,000
Output power	100 %	95 %	91 %	86 %	82 %	78 %	74 %	70 %	67 %

A

APPENDIX A

Ordering codes and accessories

The UPS, the battery cabinets and the option cards.

TABLE A-1 FERRUS ordering codes

Code	Description
FER1000-2X9	FERRUS 1 kVA online UPS, tower, internal batteries
FER1000-2X9+BAT0424 (x2, x3, x4)	FERRUS 1 kVA with 1 to 4 × BAT0424 battery cabinets
FER2000-4X9	FERRUS 2 kVA online UPS, tower, internal batteries
FER2000-4X9+BAT0848 (x2, x3, x4)	FERRUS 2 kVA with 1 to 4 × BAT0848 battery cabinets
FER3000-6X9	FERRUS 3 kVA online UPS, tower, internal batteries
FER3000-6X9+BAT1272 (x2, x3, x4)	FERRUS 3 kVA with 1 to 4 × BAT1272 battery cabinets
BAT0424 · BAT0848 · BAT1272	Battery cabinet, tower, 24 / 48 / 72 V DC (Table 4-3)
SNMP-M	SNMP-M network card: web pages, SNMP v1/v2c/v3, Modbus TCP/IP, MQTT (Section 6.1)
DRYCNT	Dry-contact card: utility failure, battery low, UPS fault, bypass, general alarm, normal mode, remote shutdown (Section 6.4)

APPENDIX B

B Battery assembly

How the internal batteries sit in the tower and how they are wired. Use these pictures when you replace the batteries (Section 8.5).

B.1 FERRUS 1K

1. Place battery 1 and battery 2 in the UPS.
2. Connect W106 (BAT+) and W108 to battery 1, and W107 (BAT−) and W108 to battery 2 (Figure B-1).

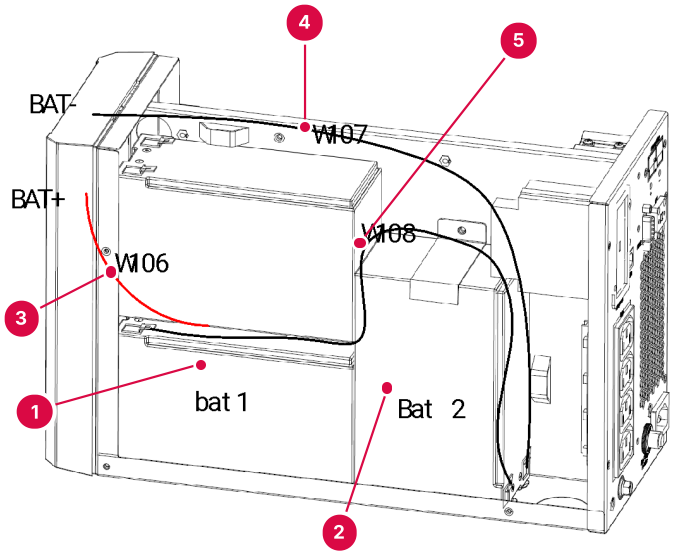

1. Battery 1
2. Battery 2
3. W106, red — BAT+ to battery 1
4. W107, black — BAT− to battery 2
5. W108 — link between battery 1 and battery 2

FIGURE B-1 Battery assembly, FERRUS 1K (2 × 12 V 9 Ah)

B.2 FERRUS 2K and 3K

1. Place all batteries in the UPS as shown (Figure B-2).
2. Connect all cables one by one: W109 (BAT+, red) and W110 (BAT−) to the end blocks, the links W111 between the blocks and W112 between the two rows.

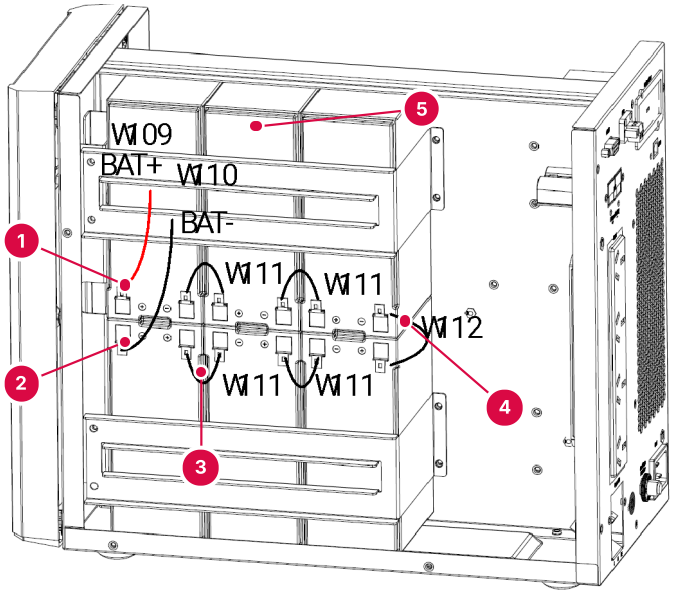

1. W109, red — BAT+
2. W110, black — BAT−
3. W111 — links between blocks (four)
4. W112 — link between the two rows
5. Battery blocks, 12 V 9 Ah

FIGURE B-2 Battery assembly, FERRUS 3K (6 × 12 V 9 Ah, two rows of three); the 2K uses the same chassis and cables with 4 blocks

C

APPENDIX C

Warranty

What the warranty covers.

TABLE C-1 Warranty

Item	Coverage
FERRUS UPS	3 years
VRLA batteries	2 years

During the warranty AEC repairs or replaces a faulty product. Keep the purchase invoice. Not covered: transport damage, incorrect installation or use, use outside the conditions of this manual, repairs by anyone not authorized by AEC, and natural events. The sales contract prevails.

D

APPENDIX D

Acronyms and abbreviations

The abbreviations used in this manual and on the panel.

TABLE D-1 Acronyms and abbreviations

Term	Meaning
AWG	American Wire Gauge
BAT / BYP	Battery / bypass indicator
ECO	Economy (energy-saving) operating mode
EPO	Emergency power off
INV / REC	Inverter / rectifier indicator
LCD	Liquid-crystal display
NC / NO	Normally closed / normally open (contact)
NEC	National Electrical Code (NFPA 70)
NEMA	National Electrical Manufacturers Association (receptacle and plug types)
PFC	Power-factor correction
RS-232 / RS-485	Serial communication standards
SNMP	Simple Network Management Protocol
UPS	Uninterruptible power supply
VRLA	Valve-regulated lead-acid (battery)

E

APPENDIX E

Drawings

The overall dimensions of the UPS and of the BAT battery cabinets.

The single-line diagram of the power path is in Figure 2-9.

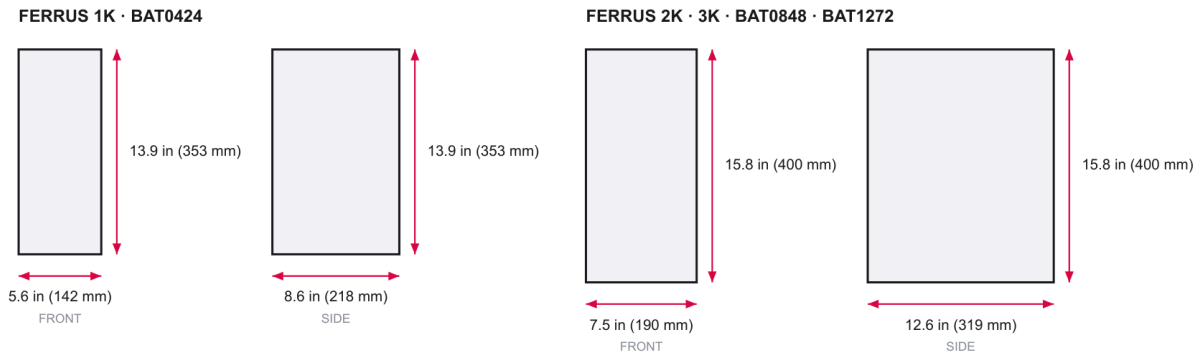

FIGURE E-1 FERRUS and BAT battery cabinets — overall dimensions (not to scale between units; details not shown)

F

APPENDIX F

Quick reference

The keys at a glance.

TABLE F-1 Quick reference

Task	How
Start on utility power	Switch the supply on: the UPS starts on bypass and goes to normal mode by itself
Start without utility (cold start)	ON/OFF once, then hold ON/OFF 5 s
Transfer to bypass	Hold ON/OFF 2.5 s (normal mode)
Return to the inverter	Press ON/OFF
Shut down on battery	Hold ON/OFF more than 2.5 s
Next LCD page	FUNC
Silence the buzzer	Hold FUNC 1.5 s on page 1
Read a fault code	FUNC: the code is on page 4
Clear a fault	Hold FUNC 1.5 s on page 4
Open / close the settings	Hold FUNC + ON/OFF 2.5 s
In the settings	FUNC chooses · ON/OFF confirms · new settings apply after a restart
Menus	123 rated values and battery · 232 RS-232 · 234 SNMP card · 485 RS-485 · 567 setting recovery

APPENDIX G

Frequently asked questions

Short answers to common questions.

TABLE G-1 Frequently asked questions

Question	Answer
Should the UPS stay switched on?	Yes. Leave it on all the time: it protects the load and keeps the battery charged.
How long does the battery take to recharge?	At least 12 hours for a full charge after a long discharge.
Is the output a pure sine wave?	Yes. The UPS is online double conversion: the inverter builds a regulated sine wave at all times, on utility and on battery.
What happens when the battery runs out?	The UPS switches its output off at the end of discharge, then restarts by itself when the utility returns and recharges the battery.
Can I add batteries later?	Yes: BAT battery cabinets of the same DC voltage as the UPS. Set the battery capacity and the charge current in menu 123 (Section 4.7).
What is ECO mode, and should I use it?	In ECO mode the load runs on the bypass while the utility is good: efficiency is higher, but the load is not protected from utility disturbances. Use normal online mode for sensitive equipment.
Can I plug a power strip into the UPS?	Only a plain power strip within the rating of the receptacle. Do not connect surge-protector strips, and never connect a UPS to the output of another UPS.
Which equipment should not be connected?	Laser printers, space heaters, vacuum cleaners, hair dryers and other loads with high start-up current or half-wave rectifiers.
Can I use the UPS with a generator?	Yes — see Section 3.3.
Can I move the UPS while it runs?	No. Shut it down and disconnect it first; move it upright.

APPENDIX H

H Installation record

Fill this record in at installation and keep it with the UPS. It is the first thing AEC service will ask for.

TABLE H-1 Installation record

Item	Value
Model and ordering code	
Serial number (rating label at the rear)	
Installation date	
Installed by (company, name)	
Site and room	
Branch circuit (breaker rating, conductor size, receptacle type)	
Battery set-up (internal only, or number of BAT cabinets)	
Battery capacity set (Ah) and charge current (A)	
Output voltage set (100, 110, 115, 120 V)	
System mode (S normal, E ECO)	
Communication (RS-232 ID, SNMP-M IP address)	
Load at start-up (%)	
EPO wiring (jumper or remote switch)	

Service and support

AEC technical support is available 24 hours a day, 7 days a week. For help with installation, start-up, alarms, settings, spare parts, warranty claims and service visits, contact us by WhatsApp, phone or e-mail.

TECHNICAL SUPPORT · 24/7	**+1 786 553 2100**	WhatsApp and phone — always available
SERVICE E-MAIL	**service.us@aecups.com**	Technical questions, service requests, warranty claims
SALES	**sales@aecups.com**	
ADDRESS	**AEC UPS USA LLC**	4872 SW 72nd Ave, Miami, FL 33155
WEB	**aecups.com**	

When you contact us, have ready: the model and ordering code, the serial number (on the rating label at the rear of the UPS), the code shown on LCD page 4, the load and the battery set-up — a photo of the display and of the label speeds things up on WhatsApp.