SPLIT-PHASE ONLINE UPS · ISOLATION TRANSFORMER

FERRUS SP

6–20 kVA

Online double conversion with an output isolation transformer, for 120/240 V split-phase loads: towers with internal batteries and matching battery cabinets.



FERRUS SP 6–10 AND 20 KVA TOWERS

120/240 V
split-phase output

kVA = kW
output power factor 1

93 %
efficiency, up to

Isolation
transformer integrated

Product Overview
FERRUS SP 6–20 kVA

ISOLATION

Isolation transformer

No wire runs from the supply to the loads: noise and faults on the mains stay on the mains side.

- isolated on the bypass too
- for mixed and motor loads

SPLIT-PHASE

120/240 V, four ways

Jumpers on the output terminals set the output for the site.

- two separate 120 V outputs
- one 240 V output, full rating

CLEAN POWER

Online double conversion

PFC input and IGBT inverter: sags and spikes never reach the load.

- input power factor > 0.99
- output THD < 2.5 %, up to 93 %

120/240 V split-phase

Two 120 V legs, 240 V across them.

Isolation transformer

The output isolated from the supply.

kVA = kW

Output power factor 1.

PFC input

Input power factor above 0.99.

Online, up to 93 %

Double conversion; ECO mode selectable.

Color touchscreen

Readings, settings, logs, two access levels.

Parallel ×3, N+1

Up to three units of one rating.

Maintenance bypass

Service with the load on the mains.

Key data

	6 kVA	10 kVA	20 kVA	20 kVA EMPTY
Power (W)	6,000	10,000	20,000	20,000
Battery inside	16 × 12 V 9 Ah inside	16 × 12 V 9 Ah inside	40 × 12 V 9 Ah inside	none: room for 40 × 12 V 9 Ah
DC bus	192 V DC	192 V DC	240 V DC	240 V DC
Backup 100 % · 50 %	6 min · 14 min	3.2 min · 7.5 min	4.2 min · 10 min	batteries not supplied
W × D × H	9.8 × 23.6 × 29.1 in	9.8 × 23.6 × 29.1 in	13.7 × 25 × 47.2 in	13.7 × 25 × 47.2 in
Weight	196.2 lb	235.9 lb	452 lb	218.3 lb

INPUT
176–275 V AC, 40–70 Hz, PF > 0.99

OUTPUT
120/240 V split-phase, 60 Hz, THD < 2.5 %

EFFICIENCY
up to 93 %

PARALLEL
up to 3 units, N+1

STANDARDS
UL 1778 standard

Front View
FERRUS SP 6–20 kVA

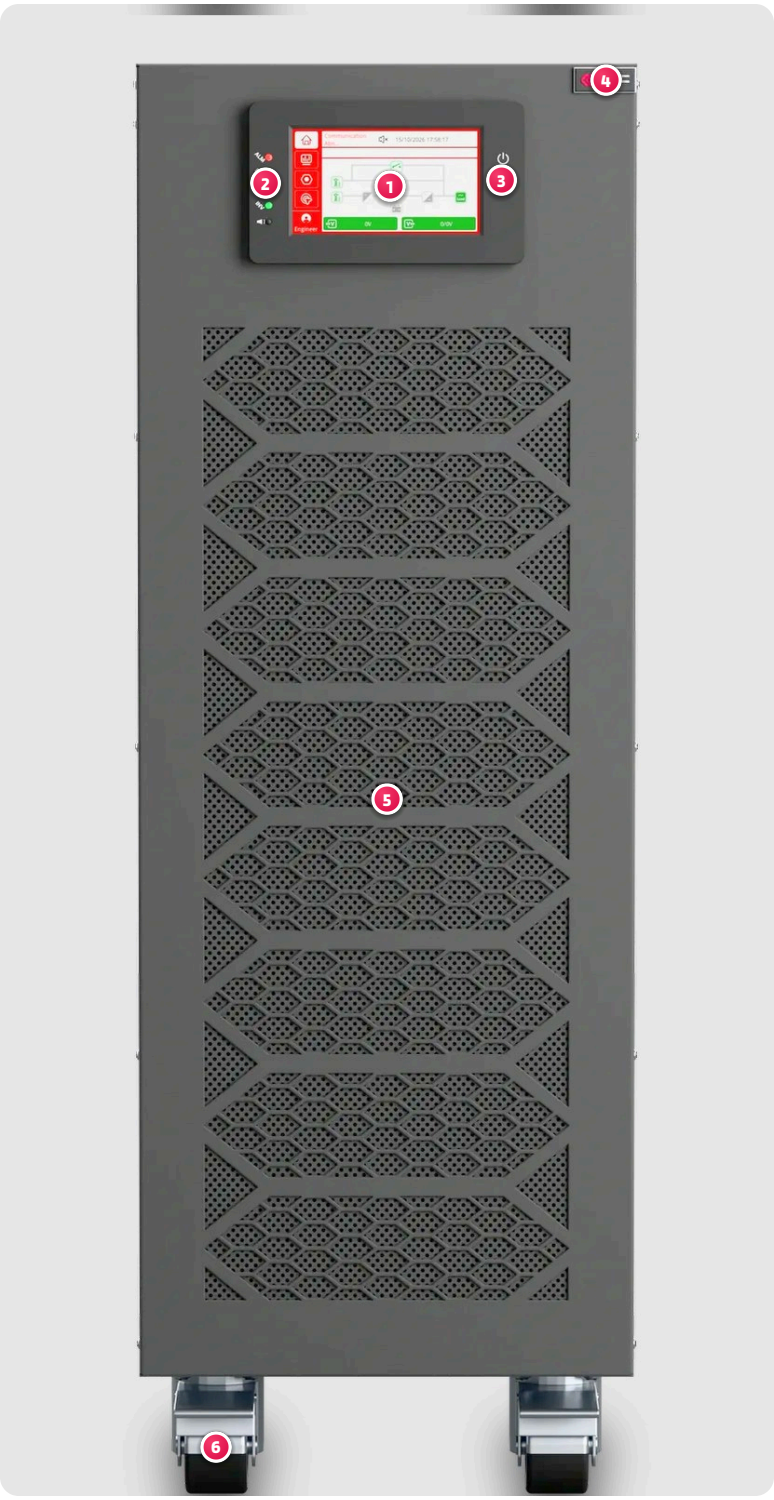

1 Color touchscreen
AEC interface: power flow, readings, settings, tests and logs.

2 Status LEDs
ALM, BYP, BAT, INV and buzzer mute, beside the screen.

3 Power button
On and off, as on the screen's Control page.

4 AEC badge
At the top corner of the front.

5 Front grille
Air in at the front, out through the transformer fan at the back.

6 Casters
The tower rolls into place; 9.8 in wide, 29.1 in high.

Status LEDs

ALM	Alarm: lit on a fault or a warning
BYP	Bypass: lit while the load is on the bypass
BAT	Battery: lit while the battery supplies the load
INV	Inverter: lit while the inverter supplies the load
Mute	The buzzer is muted

Normal operation: INV alone lit.

The 6, 10 and 20 kVA towers carry the same front panel; the 20 kVA-40X9, with 40 × 12 V 9 Ah inside, is wider and taller.

Rear View
FERRUS SP 6–10 kVA

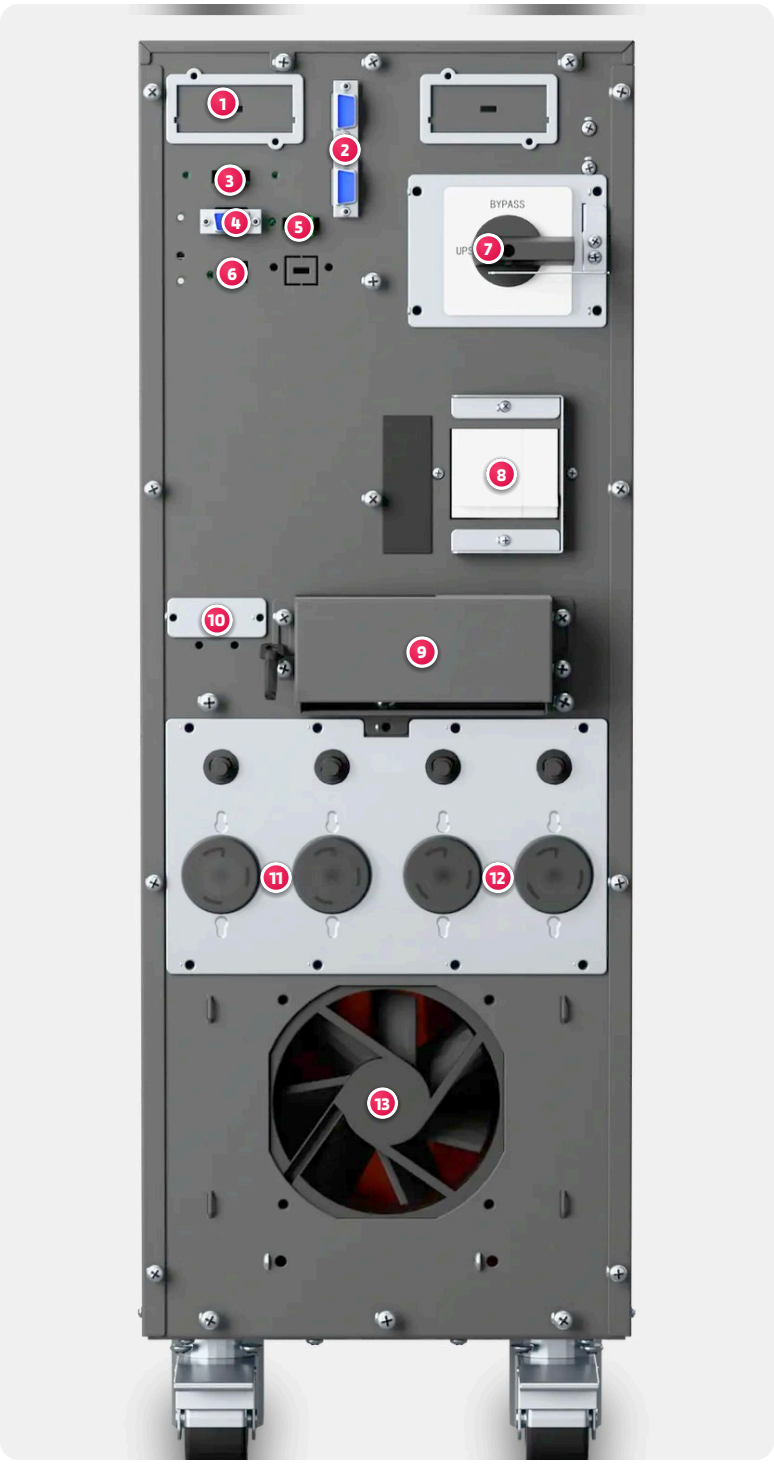

FERRUS SP 6–10 kVA, rear

1. **Intelligent slots**
   Two: SNMP-M card and dry-contact card at once.
2. **Parallel ports**
   For the parallel cables, up to three units.
3. **RS485**
   Modbus link.
4. **RS232**
   DB9 for monitoring software.
5. **EPO**
   Normally closed loop.
6. **USB**
   Monitoring software.
7. **Maintenance bypass**
   UPS or BYPASS: the load stays on the mains for service.
8. **Mains and bypass breakers**
   Of the split-phase input and the bypass.
9. **Terminal strip**
   PE, input L1 and L2, output L1 N1 L2 N2: 120 V and 240 V.
10. **Battery terminals**
    BAT+ and BAT– for battery cabinets.
11. **NEMA L5-30R**
    30 A outlets, 120 V, with output surge protection.
12. **NEMA L6-30R**
    30 A outlets, 240 V, with output surge protection.
13. **Transformer fan**
    Cooling of the output transformer.

Touchscreen Interface
FERRUS SP 6–20 kVA

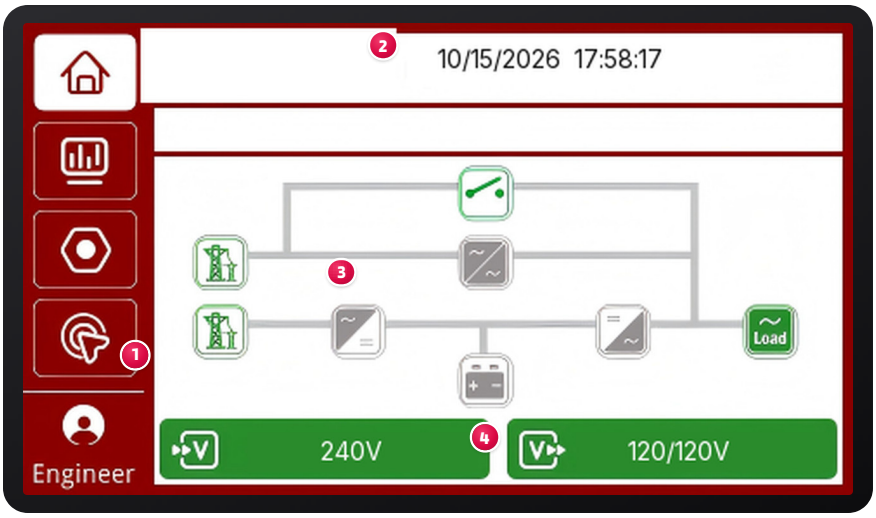

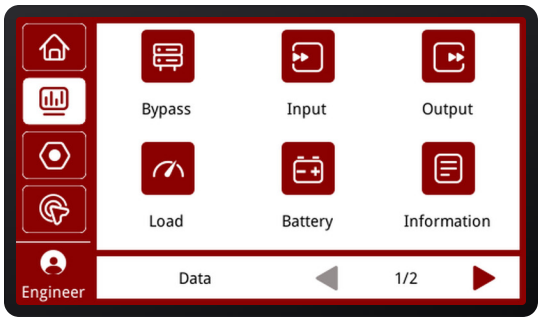

Data menu
Bypass, Input, Output, Load, Battery and Information; page 1 of 2.

1 Side menu
Home and Data pages and two more; the user level logged in below (Engineer).

2 Status bar
The current message, buzzer mute, date and time.

3 Power flow
Mains, bypass switch, rectifier, inverter, battery and load, each shown green or grey.

4 Input and output
Input voltage, and the output voltage of the two legs.

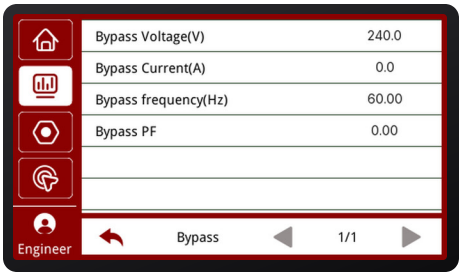

Data · Bypass
Bypass voltage, current, frequency and power factor.

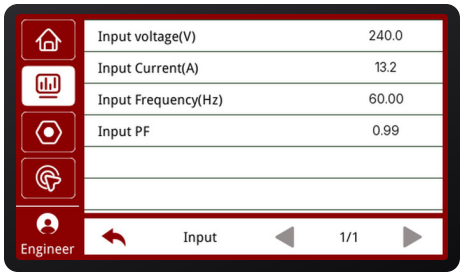

Data · Input
Input voltage, current, frequency and power factor.

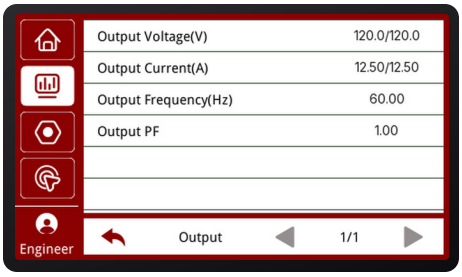

Data · Output
Voltage and current of the two legs, frequency and power factor.

Access and functions

Access levels
User: home, data, logs, mute. Engineer: settings and tests.

ECO mode
System mode E: the load on the bypass while the mains is good.

Battery self-test
A short discharge tests the batteries; a failure raises an alarm.

Cold start
No mains: COLD START, then ON/OFF: the UPS runs on battery.

The screens are the same on FERRUS SP and FERRUS SP RT.

Touchscreen Menus
FERRUS SP 6–20 kVA

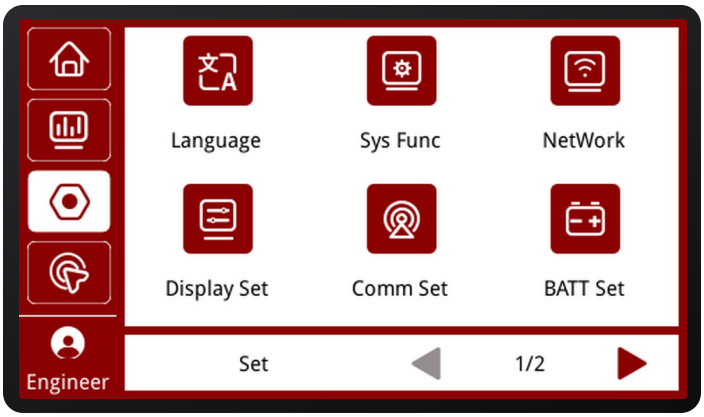

Set menu
Language, Sys Func, NetWork, Display Set, Comm Set and BATT Set; page 1 of 2.

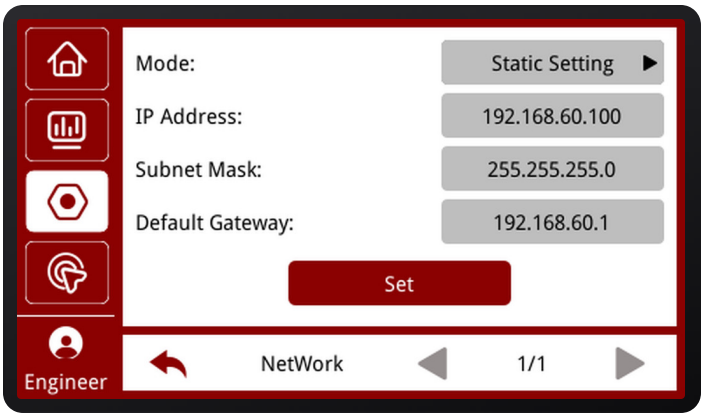

Set · NetWork
Mode Static Setting; IP address, subnet mask and default gateway, applied with Set.

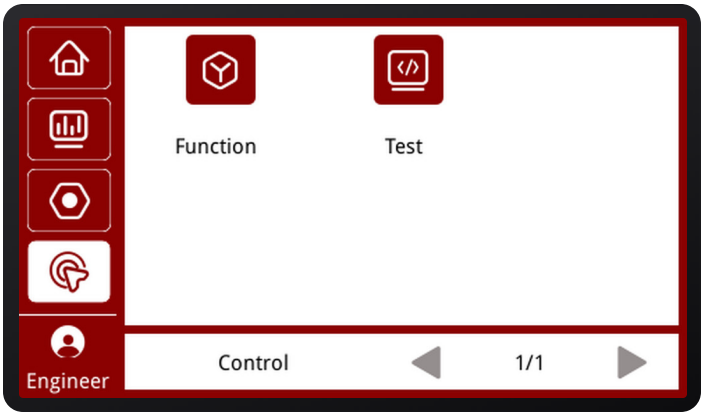

Control menu
Two pages: Function and Test.

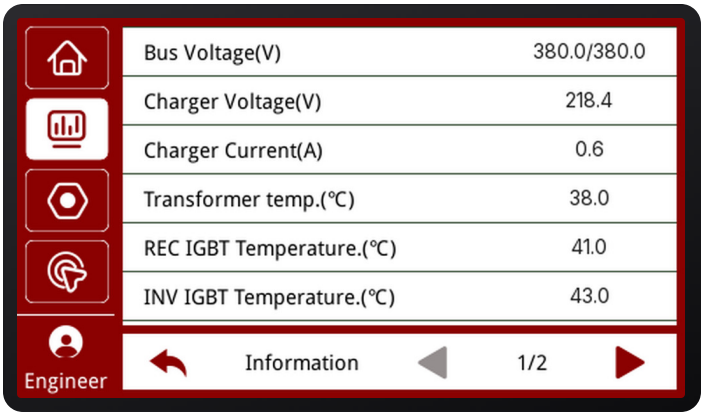

Data · Information
Bus, charger voltage and current; transformer, rectifier and inverter IGBT temperatures; page 1 of 2.

What the settings set

Rated values
Input and output voltage and frequency, set for the site.

Battery
Number of 12 V blocks, 10 to 20 (120–240 V DC), capacity in Ah and charger current.

System mode
Single, parallel with a unit ID, ECO, or self-aging.

Communication
RS-232 and RS-485: baud rate, ID 1 to 32 and protocol (Modbus).

Settings at the engineer level; new settings take effect after a restart.

Isolation Transformer Technology
FERRUS SP 6–20 kVA

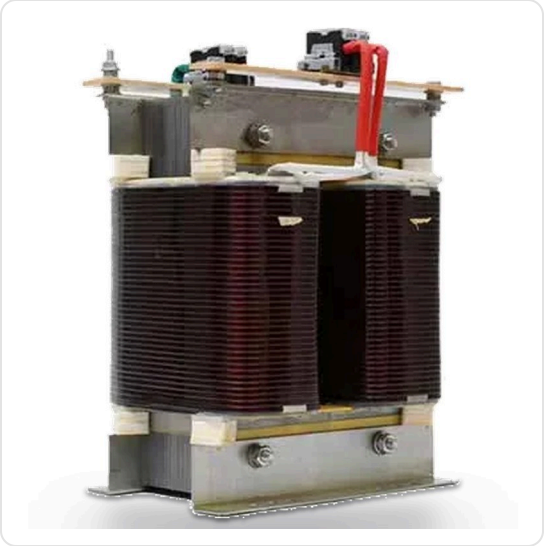

Galvanic isolation
No wire runs from the supply to the loads: the power crosses the transformer as a magnetic field, so noise and faults on the mains stay on the mains side.

120 V and 240 V from one UPS
Two secondary windings make the two 120 V legs; in series, 240 V. Jumpers on the output terminals choose the wiring.

Isolated on the bypass too
The bypass joins ahead of the transformer: the loads stay on its windings in bypass mode; mains disturbances are not filtered there.

For mixed and motor loads
120 V equipment and 240 V machines on the same UPS, as on a panel board.

Working principle

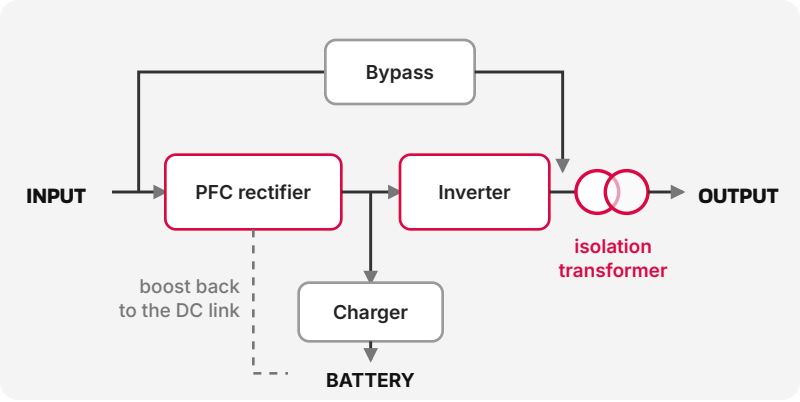

At the input, surge suppression (TVSS) and EMI/RFI filters; a 3-level IGBT inverter.

Operating modes

Line mode
PFC and inverter feed the load; the charger float-charges the battery.

Battery mode
Mains abnormal: the battery takes over without interrupting the output.

Bypass mode
Overload, over-temperature or a fault: the load moves to the bypass automatically.

ECO mode
System mode E: the load stays on the bypass while it is good.

Facts

180°
Between the two legs
L1–N1 and L2–N2 in opposition, as in a North American split-phase service.

110–127 V
Per leg
110, 115, 120 or 127 V on each leg; 220, 230 or 240 V from L1 to N2.

100 %
Of the rating on one output
One 120 V or one 240 V output carries the full rating; two separate 120 V outputs, 50 % each.

25 · 42 · 84 A
Per leg at 120 V
Output current of the 6, 10 and 20 kVA models on each 120 V leg.

Output Configurations
FERRUS SP 6–20 kVA

Two 120 V legs from the isolation transformer; jumpers on the output terminals set the output for the site. In a parallel system every unit uses the same configuration.

01 Two separate 120 V outputs

Load 1 on L1–N1, load 2 on L2–N2; half the rating each.

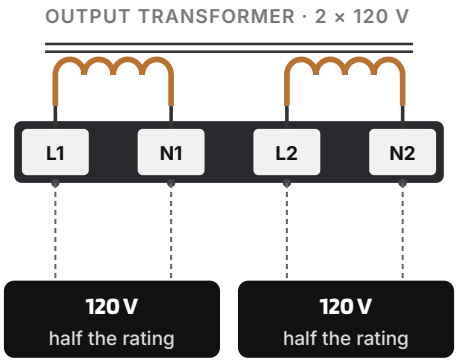

02 One 120 V output

L1 jumpered to L2 and N1 to N2: the full rating at 120 V.

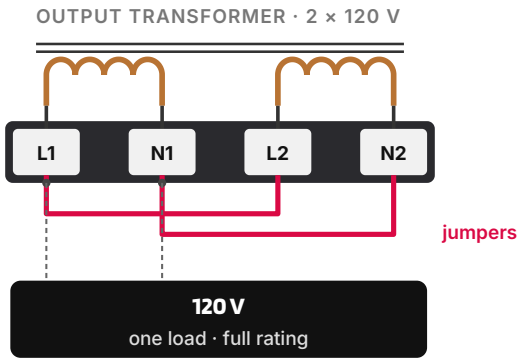

03 One 240 V output

N1 jumpered to L2: the full rating at 240 V, L1 to N2.

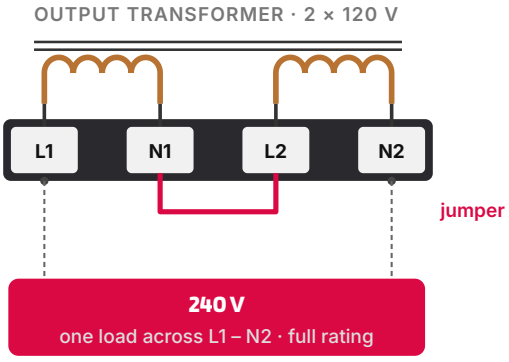

04 120 V and 240 V together

N1–L2 jumpered: 120 V on each leg, 240 V across.

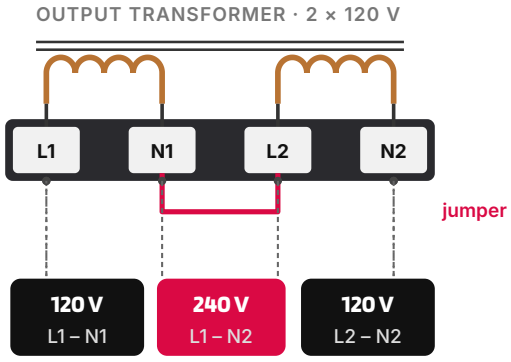

Terminal strip

PE	protective earth
I/P L1 · L2	split-phase input
O/P L1 · N1	120 V output, leg 1
O/P L2 · N2	120 V output, leg 2
BAT+ · BAT–	external battery

Outlets · 6 and 10 kVA towers



2 × NEMA L5-30R
120 V, 30 A



2 × NEMA L6-30R
240 V, 30 A

Battery and Runtime
FERRUS SP 6–20 kVA

The 6 and 10 kVA towers carry 16 blocks inside, the 20 kVA 40; BB4US cabinets add 32, 64 or 80 blocks. Times at full load, new batteries.

Backup time at full load

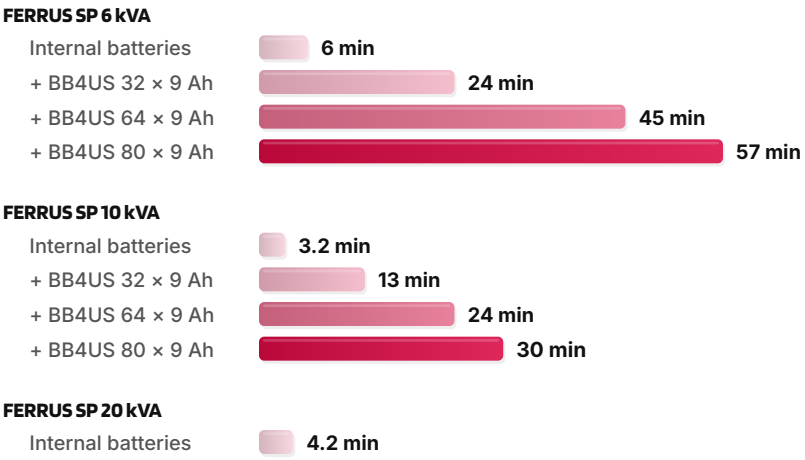

Runtime at 100 % load; at lighter loads it is longer.

Backup time by load

Set-up	100 %	75 %	50 %	25 %
6 kVA + BB4US 32 × 9 Ah	24	31	56	107
6 kVA + BB4US 64 × 9 Ah	45	59	107	3 h 22
6 kVA + BB4US 80 × 9 Ah	57	74	2 h 15	4 h 14
10 kVA + BB4US 32 × 9 Ah	13	17	30	56
10 kVA + BB4US 64 × 9 Ah	24	32	57	107
10 kVA + BB4US 80 × 9 Ah	30	40	72	2 h 15



BB4US battery cabinet: up to 80 blocks of 12 V 9 Ah inside, 9.8 in wide.

Battery care

- Operate at 59–77 °F (15–25 °C) for rated battery life.
- Long-backup set-ups: battery capacity above 24 Ah.
- Open the external battery breaker before opening any cover.
- Check the polarity of external batteries with a voltmeter before connecting.

Adding a battery cabinet

01 The same 192 V DC string as inside the UPS.

02 Wired to BAT+ and BAT−, the cabinet breaker open.

03 Battery set-up entered on the touchscreen.

192 · 240 V
battery DC bus

12 V 9 Ah
VRLA blocks, sealed

1–8 A
charger, long-backup set-ups

10–20
blocks per string, set on the panel

Technical Specifications
FERRUS SP 6–20 kVA

Model	6 kVA	10 kVA	20 kVA
Power (VA / W)	6,000 / 6,000	10,000 / 10,000	20,000 / 20,000
INPUT			
Voltage · frequency	176–275 V AC at full load · 40–70 Hz		
Power factor	> 0.99 at full load		
Current, max.	36 A	63 A	125 A
OUTPUT			
Voltage	120/240 V split-phase (110 / 115 / 120 / 127 V per leg) · 240 V single output		
Regulation · frequency	1 % · 60 Hz, 0.1 % of nominal		
THD · crest factor	< 2.5 % at full linear load · 3 : 1		
Overload	110 % 10 min · 130 % 1 min · 150 % 30 s, then bypass		
Efficiency, up to	93 %		
Outlets	terminal strip · 6 and 10 kVA: 2 × L5-30R, 2 × L6-30R		
BATTERY			
Configuration	16 × 12 V 9 Ah inside		40 × 12 V 9 Ah inside
DC voltage	192 V DC		240 V DC
Backup at 50 % · 100 %	14 min · 6 min	7.5 min · 3.2 min	10 min · 4.2 min
GENERAL			
Communication	RS232 · RS485 · USB · 2 intelligent slots (SNMP-M and dry contacts) · EPO · parallel ports		
Parallel	up to 3 units, N+1		
Environment · clearance	32–104 °F (0–40 °C) · RH < 95 % · 3,300 ft (1,000 m) at full power · 20 in (0.5 m) clear on each side, vents open		
W × D × H in	9.8 × 23.6 × 29.1		13.7 × 25 × 47.2
W × D × H mm	249 × 599 × 739		348 × 635 × 1,199
Weight	196.2 lb (89 kg)	235.9 lb (107 kg)	452 lb (205 kg)
Standards	UL 1778 standard		
Warranty	3 years on the UPS · 2 years on VRLA batteries		

Options

BB4US

Battery cabinet, 192 V DC

Up to 80 × 12 V 9 Ah blocks: empty, or with 32, 64 or 80 installed. 9.8 × 33.5 × 28.5 in, 110 lb empty.

SNMP-M

SNMP card

Web pages, SNMP v1/v2c/v3, Modbus TCP/IP and MQTT.

DRYCNT

Dry-contact card

Signals as voltage levels from the card's 12–24 V DC supply: UPS fault, warning, bypass, battery low, normal mode, utility fault; a remote shutdown input.

The 20 kVA also comes with its battery compartment supplied empty (FERSP20000-EMPTY), same electrical data. Subject to change without notice.

Ordering Information
FERRUS SP 6–20 kVA

FERSP **10000** **-16X9** **+BB4US-32X9**

series	rating in VA	battery: 16 × 12 V 9 Ah, internal	battery cabinet and its blocks

RATING
6000, 10000 or 20000 VA

BATTERY INSIDE
-16X9 on the 6 and 10 kVA;
-40X9 or -EMPTY on the 20 kVA

CABINET
+BB4US-32X9, -64X9 or -80X9, on the 6 and 10 kVA

EXAMPLES

FERSP6000-16X9
FERRUS SP 6 kVA

FERSP10000-16X9+BB4US-64X9
10 kVA with a BB4US of 64 blocks

Code	Description
FERSP6000-16X9	FERRUS SP 6 kVA split-phase online UPS, tower, internal batteries
FERSP6000-16X9+BB4US-32X9	FERRUS SP 6 kVA with BB4US cabinet, 32 × 12 V 9 Ah
FERSP6000-16X9+BB4US-64X9	FERRUS SP 6 kVA with BB4US cabinet, 64 × 12 V 9 Ah
FERSP6000-16X9+BB4US-80X9	FERRUS SP 6 kVA with BB4US cabinet, 80 × 12 V 9 Ah
FERSP10000-16X9	FERRUS SP 10 kVA split-phase online UPS, tower, internal batteries
FERSP10000-16X9+BB4US-32X9	FERRUS SP 10 kVA with BB4US cabinet, 32 × 12 V 9 Ah
FERSP10000-16X9+BB4US-64X9	FERRUS SP 10 kVA with BB4US cabinet, 64 × 12 V 9 Ah
FERSP10000-16X9+BB4US-80X9	FERRUS SP 10 kVA with BB4US cabinet, 80 × 12 V 9 Ah
FERSP20000-40X9	FERRUS SP 20 kVA split-phase online UPS, tower, internal batteries
FERSP20000-EMPTY	FERRUS SP 20 kVA, battery compartment supplied empty
BB4US	Battery cabinet, tower, 192 V DC, empty
BB4US-32X9	Battery cabinet, tower, 192 V DC, 32 × 12 V 9 Ah
BB4US-64X9	Battery cabinet, tower, 192 V DC, 64 × 12 V 9 Ah
BB4US-80X9	Battery cabinet, tower, 192 V DC, 80 × 12 V 9 Ah
SNMP-M	SNMP-M network card: web pages, SNMP v1/v2c/v3, Modbus TCP/IP and MQTT; for FERRUS, FERRUS RT, FERRUS SP, FERRUS SP RT, RADIANT, RADIANT-IB, CIRRO-IB and CIRRO
DRYCNT	Dry-contact card: status signals and a remote shutdown input



FERRUS SP 6 · 10 kVA tower



BB4US battery cabinet

32 · 64 · 80

Blocks in the BB4US

12 V 9 Ah blocks: the cabinet is ordered empty or filled, BB4US-32X9 to -80X9. 9.8 × 33.5 × 28.5 in, 110 lb empty; 192 V DC, for the 6 and 10 kVA.