SPLIT-PHASE ONLINE UPS · ISOLATION TRANSFORMER

# FERRUS SP

## 6–20 kVA

Online double conversion with an output isolation transformer, for 120/240 V split-phase loads: towers with internal batteries and matching battery cabinets.



FERRUS SP 6–10 AND 20 KVA TOWERS

**120/240 V**
split-phase output

**kVA = kW**
output power factor 1

**93 %**
efficiency, up to

**Isolation**
transformer integrated

# Product Overview
# FERRUS SP 6–20 kVA

ISOLATION

## Isolation transformer

No wire runs from the supply to the loads: noise and faults on the mains stay on the mains side.

- isolated on the bypass too
- for mixed and motor loads

SPLIT-PHASE

## 120/240 V, four ways

Jumpers on the output terminals set the output for the site.

- two separate 120 V outputs
- one 240 V output, full rating

CLEAN POWER

## Online double conversion

PFC input and IGBT inverter: sags and spikes never reach the load.

- input power factor > 0.99
- output THD < 2.5 %, up to 93 %

### 120/240 V split-phase

Two 120 V legs, 240 V across them.

### Isolation transformer

The output isolated from the supply.

### kVA = kW

Output power factor 1.

### PFC input

Input power factor above 0.99.

### Online, up to 93 %

Double conversion; ECO mode selectable.

### Color touchscreen

Readings, settings, logs, two access levels.

### Parallel ×3, N+1

Up to three units of one rating.

### Maintenance bypass

Service with the load on the mains.

## Key data

| | 6 kVA | 10 kVA | 20 kVA | 20 kVA EMPTY |
|---|---|---|---|---|
| **Power (W)** | 6,000 | 10,000 | 20,000 | 20,000 |
| **Battery inside** | 16 × 12 V 9 Ah inside | 16 × 12 V 9 Ah inside | 40 × 12 V 9 Ah inside | none: room for 40 × 12 V 9 Ah |
| **DC bus** | 192 V DC | 192 V DC | 240 V DC | 240 V DC |
| **Backup 100 % · 50 %** | 6 min · 14 min | 3.2 min · 7.5 min | 4.2 min · 10 min | batteries not supplied |
| **W × D × H** | 9.8 × 23.6 × 29.1 in | 9.8 × 23.6 × 29.1 in | 13.7 × 25 × 47.2 in | 13.7 × 25 × 47.2 in |
| **Weight** | 196.2 lb | 235.9 lb | 452 lb | 218.3 lb |

**INPUT**
176–275 V AC, 40–70 Hz, PF > 0.99

**OUTPUT**
120/240 V split-phase, 60 Hz, THD < 2.5 %

**EFFICIENCY**
up to 93 %

**PARALLEL**
up to 3 units, N+1

**STANDARDS**
UL 1778 standard

# Front View
# FERRUS SP 6–20 kVA






**1 Color touchscreen**
AEC interface: power flow, readings, settings, tests and logs.

**2 Status LEDs**
ALM, BYP, BAT, INV and buzzer mute, beside the screen.

**3 Power button**
On and off, as on the screen's Control page.

**4 AEC badge**
At the top corner of the front.

**5 Front grille**
Air in at the front, out through the transformer fan at the back.

**6 Casters**
The tower rolls into place; 9.8 in wide, 29.1 in high.

### Status LEDs

| | | |
|---|---|---|
| ○ | **ALM** | Alarm: lit on a fault or a warning |
| ○ | **BYP** | Bypass: lit while the load is on the bypass |
| ○ | **BAT** | Battery: lit while the battery supplies the load |
| ● | **INV** | Inverter: lit while the inverter supplies the load |
| ○ | **Mute** | The buzzer is muted |

Normal operation: INV alone lit.

The 6, 10 and 20 kVA towers carry the same front panel; the 20 kVA-40X9, with 40 × 12 V 9 Ah inside, is wider and taller.

# Rear View
# FERRUS SP 6–10 kVA



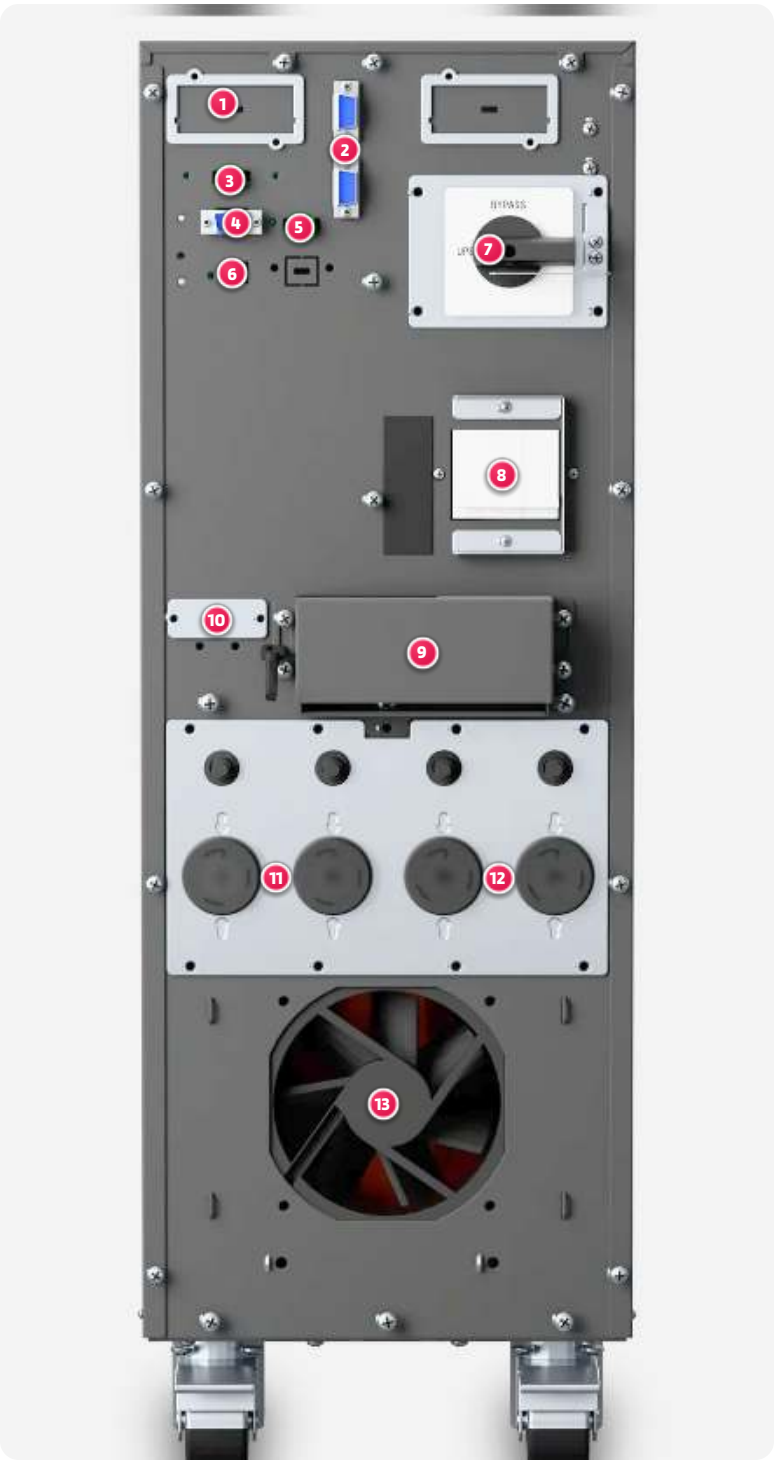


FERRUS SP 6–10 kVA, rear

1. **Intelligent slots**
   Two: SNMP-M card and dry-contact card at once.
2. **Parallel ports**
   For the parallel cables, up to three units.
3. **RS485**
   Modbus link.
4. **RS232**
   DB9 for monitoring software.
5. **EPO**
   Normally closed loop.
6. **USB**
   Monitoring software.
7. **Maintenance bypass**
   UPS or BYPASS: the load stays on the mains for service.
8. **Mains and bypass breakers**
   Of the split-phase input and the bypass.
9. **Terminal strip**
   PE, input L1 and L2, output L1 N1 L2 N2: 120 V and 240 V.
10. **Battery terminals**
    BAT+ and BAT– for battery cabinets.
11. **NEMA L5-30R**
    30 A outlets, 120 V, with output surge protection.
12. **NEMA L6-30R**
    30 A outlets, 240 V, with output surge protection.
13. **Transformer fan**
    Cooling of the output transformer.

# Touchscreen Interface
## FERRUS SP 6–20 kVA

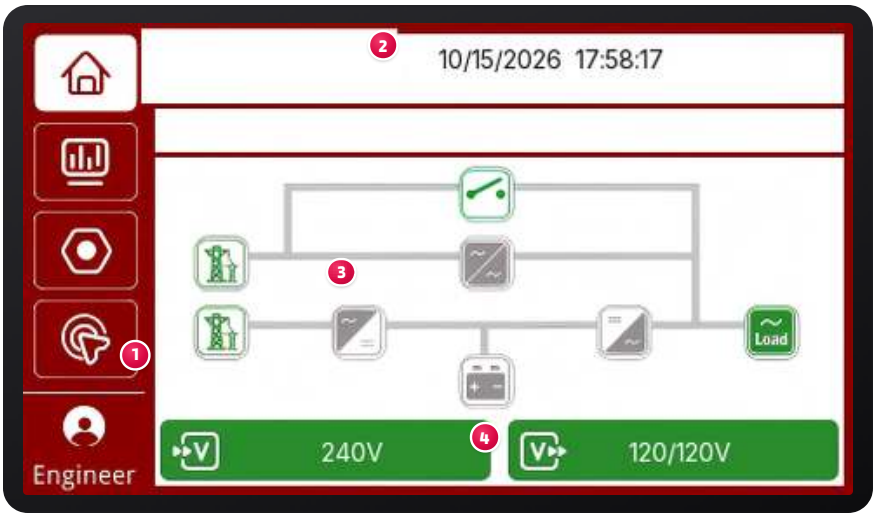





**Data menu**
Bypass, Input, Output, Load, Battery and Information; page 1 of 2.

**1 Side menu**
Home and Data pages and two more; the user level logged in below (Engineer).

**2 Status bar**
The current message, buzzer mute, date and time.

**3 Power flow**
Mains, bypass switch, rectifier, inverter, battery and load, each shown green or grey.

**4 Input and output**
Input voltage, and the output voltage of the two legs.




**Data · Bypass**
Bypass voltage, current, frequency and power factor.

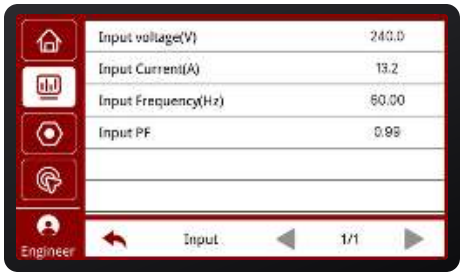


**Data · Input**
Input voltage, current, frequency and power factor.

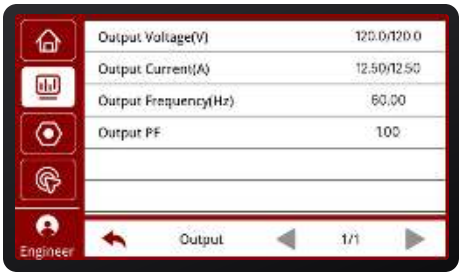


**Data · Output**
Voltage and current of the two legs, frequency and power factor.

## Access and functions

**Access levels**
User: home, data, logs, mute. Engineer: settings and tests.

**ECO mode**
System mode E: the load on the bypass while the mains is good.

**Battery self-test**
A short discharge tests the batteries; a failure raises an alarm.

**Cold start**
No mains: COLD START, then ON/OFF: the UPS runs on battery.

The screens are the same on FERRUS SP and FERRUS SP RT.

# Touchscreen Menus
# FERRUS SP 6–20 kVA

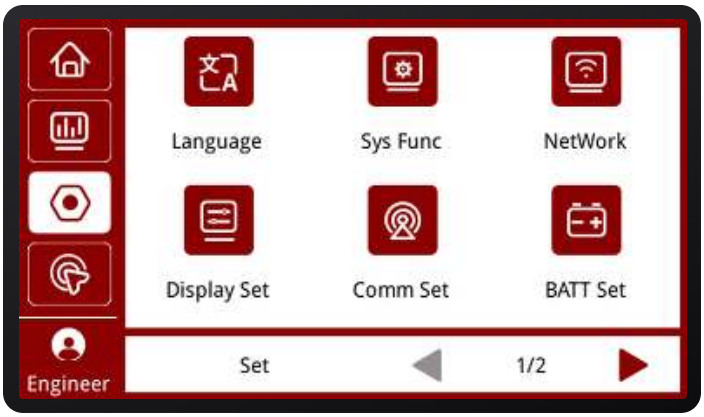


**Set menu**
Language, Sys Func, NetWork, Display Set, Comm Set and BATT Set; page 1 of 2.

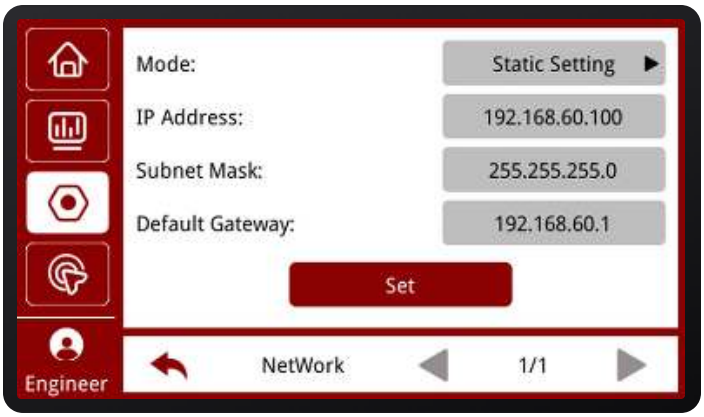


**Set · NetWork**
Mode Static Setting; IP address, subnet mask and default gateway, applied with Set.

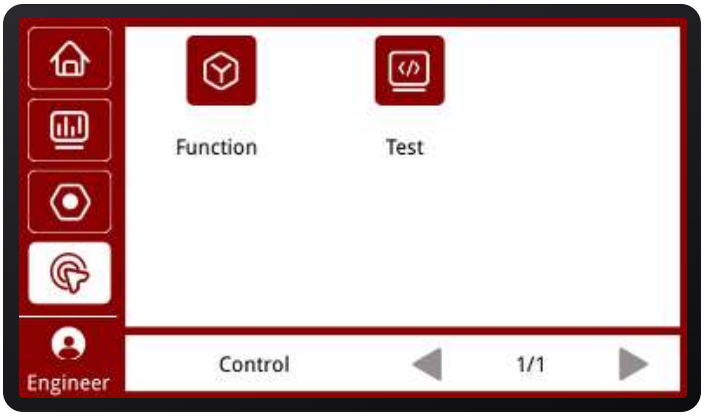


**Control menu**
Two pages: Function and Test.

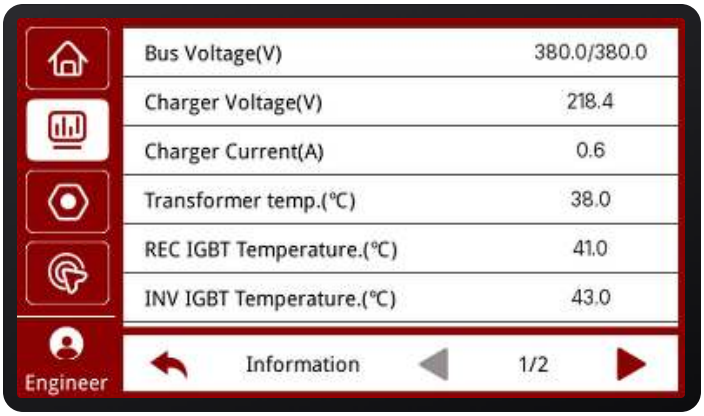


**Data · Information**
Bus, charger voltage and current; transformer, rectifier and inverter IGBT temperatures; page 1 of 2.

## What the settings set

**Rated values**
Input and output voltage and frequency, set for the site.

**Battery**
Number of 12 V blocks, 10 to 20 (120–240 V DC), capacity in Ah and charger current.

**System mode**
Single, parallel with a unit ID, ECO, or self-aging.

**Communication**
RS-232 and RS-485: baud rate, ID 1 to 32 and protocol (Modbus).

Settings at the engineer level; new settings take effect after a restart.

# Isolation Transformer Technology
# FERRUS SP 6–20 kVA

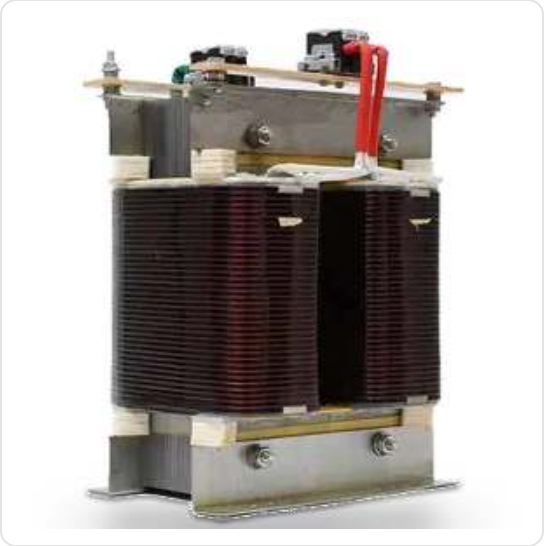

### Galvanic isolation
No wire runs from the supply to the loads: the power crosses the transformer as a magnetic field, so noise and faults on the mains stay on the mains side.

### 120 V and 240 V from one UPS
Two secondary windings make the two 120 V legs; in series, 240 V. Jumpers on the output terminals choose the wiring.

### Isolated on the bypass too
The bypass joins ahead of the transformer: the loads stay on its windings in bypass mode; mains disturbances are not filtered there.

### For mixed and motor loads
120 V equipment and 240 V machines on the same UPS, as on a panel board.

## Working principle

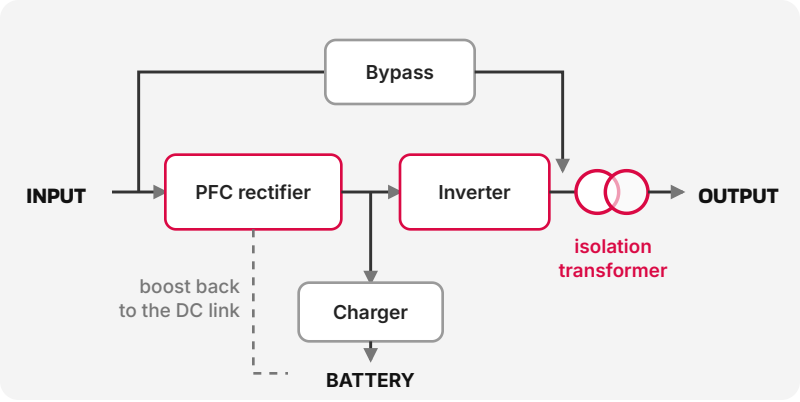


At the input, surge suppression (TVSS) and EMI/RFI filters; a 3-level IGBT inverter.

## Operating modes

**Line mode**
PFC and inverter feed the load; the charger float-charges the battery.

**Battery mode**
Mains abnormal: the battery takes over without interrupting the output.

**Bypass mode**
Overload, over-temperature or a fault: the load moves to the bypass automatically.

**ECO mode**
System mode E: the load stays on the bypass while it is good.

## Facts

**180°**
**Between the two legs**
L1–N1 and L2–N2 in opposition, as in a North American split-phase service.

**110–127 V**
**Per leg**
110, 115, 120 or 127 V on each leg; 220, 230 or 240 V from L1 to N2.

**100 %**
**Of the rating on one output**
One 120 V or one 240 V output carries the full rating; two separate 120 V outputs, 50 % each.

**25 · 42 · 84 A**
**Per leg at 120 V**
Output current of the 6, 10 and 20 kVA models on each 120 V leg.

# Output Configurations
# FERRUS SP 6–20 kVA

Two 120 V legs from the isolation transformer; jumpers on the output terminals set the output for the site. In a parallel system every unit uses the same configuration.

## 01 Two separate 120 V outputs

Load 1 on L1–N1, load 2 on L2–N2; half the rating each.

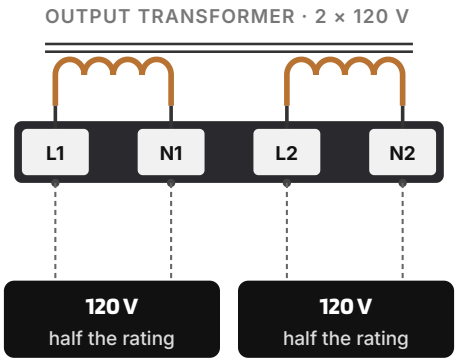


## 02 One 120 V output

L1 jumpered to L2 and N1 to N2: the full rating at 120 V.

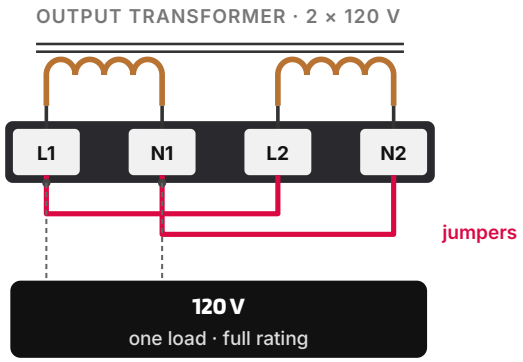


## 03 One 240 V output

N1 jumpered to L2: the full rating at 240 V, L1 to N2.

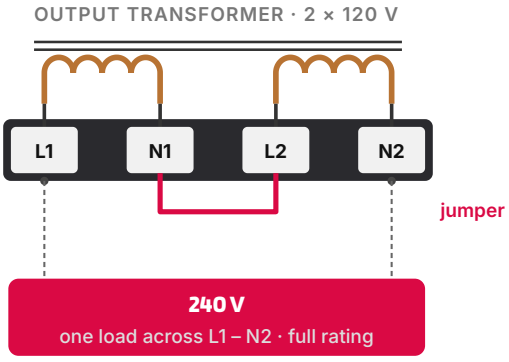


## 04 120 V and 240 V together

N1–L2 jumpered: 120 V on each leg, 240 V across.

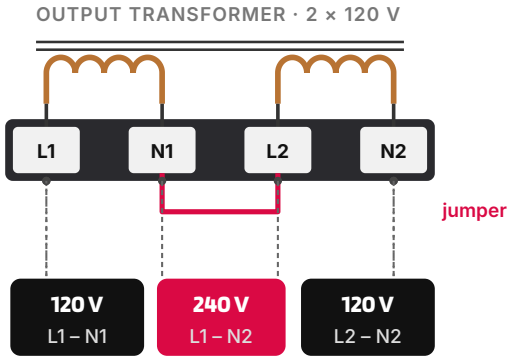


### Terminal strip

| | |
|---|---|
| **PE** | protective earth |
| **I/P L1 · L2** | split-phase input |
| **O/P L1 · N1** | 120 V output, leg 1 |
| **O/P L2 · N2** | 120 V output, leg 2 |
| **BAT+ · BAT–** | external battery |

### Outlets · 6 and 10 kVA towers



**2 × NEMA L5-30R**
120 V, 30 A



**2 × NEMA L6-30R**
240 V, 30 A

# Battery and Runtime
# FERRUS SP 6–20 kVA

The 6 and 10 kVA towers carry 16 blocks inside, the 20 kVA 40; BB4US cabinets add 32, 64 or 80 blocks. Times at full load, new batteries.

## Backup time at full load

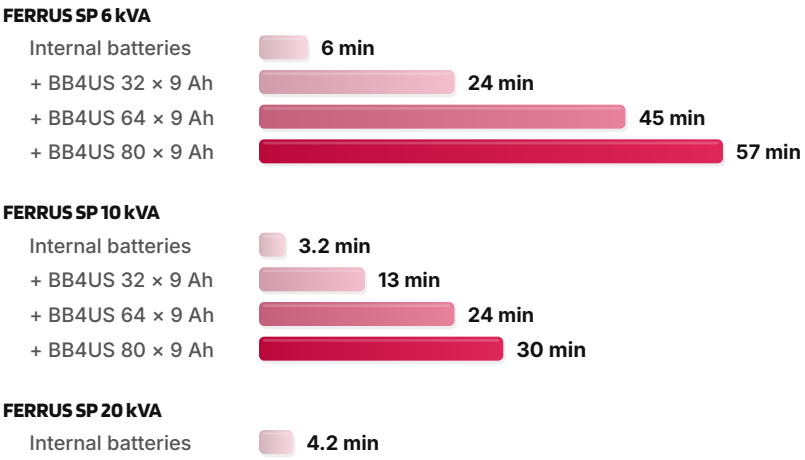


Runtime at 100 % load; at lighter loads it is longer.

## Backup time by load

| Set-up | 100 % | 75 % | 50 % | 25 % |
|---|---|---|---|---|
| **6 kVA + BB4US 32 × 9 Ah** | 24 | 31 | 56 | 107 |
| **6 kVA + BB4US 64 × 9 Ah** | 45 | 59 | 107 | 3 h 22 |
| **6 kVA + BB4US 80 × 9 Ah** | 57 | 74 | 2 h 15 | 4 h 14 |
| **10 kVA + BB4US 32 × 9 Ah** | 13 | 17 | 30 | 56 |
| **10 kVA + BB4US 64 × 9 Ah** | 24 | 32 | 57 | 107 |
| **10 kVA + BB4US 80 × 9 Ah** | 30 | 40 | 72 | 2 h 15 |




BB4US battery cabinet: up to 80 blocks of 12 V 9 Ah inside, 9.8 in wide.

## Battery care

- Operate at 59–77 °F (15–25 °C) for rated battery life.
- Long-backup set-ups: battery capacity above 24 Ah.
- Open the external battery breaker before opening any cover.
- Check the polarity of external batteries with a voltmeter before connecting.

## Adding a battery cabinet

**01** The same 192 V DC string as inside the UPS.

**02** Wired to BAT+ and BAT−, the cabinet breaker open.

**03** Battery set-up entered on the touchscreen.

**192 · 240 V**
battery DC bus

**12 V 9 Ah**
VRLA blocks, sealed

**1–8 A**
charger, long-backup set-ups

**10–20**
blocks per string, set on the panel

# Technical Specifications
# FERRUS SP 6–20 kVA

| Model | 6 kVA | 10 kVA | 20 kVA |
|---|---|---|---|
| Power (VA / W) | 6,000 / 6,000 | 10,000 / 10,000 | 20,000 / 20,000 |
| **INPUT** | | | |
| Voltage · frequency | 176–275 V AC at full load · 40–70 Hz | | |
| Power factor | > 0.99 at full load | | |
| Current, max. | 36 A | 63 A | 125 A |
| **OUTPUT** | | | |
| Voltage | 120/240 V split-phase (110 / 115 / 120 / 127 V per leg) · 240 V single output | | |
| Regulation · frequency | 1 % · 60 Hz, 0.1 % of nominal | | |
| THD · crest factor | < 2.5 % at full linear load · 3 : 1 | | |
| Overload | 110 % 10 min · 130 % 1 min · 150 % 30 s, then bypass | | |
| Efficiency, up to | 93 % | | |
| Outlets | terminal strip · 6 and 10 kVA: 2 × L5-30R, 2 × L6-30R | | |
| **BATTERY** | | | |
| Configuration | 16 × 12 V 9 Ah inside | | 40 × 12 V 9 Ah inside |
| DC voltage | 192 V DC | | 240 V DC |
| Backup at 50 % · 100 % | 14 min · 6 min | 7.5 min · 3.2 min | 10 min · 4.2 min |
| **GENERAL** | | | |
| Communication | RS232 · RS485 · USB · 2 intelligent slots (SNMP-M and dry contacts) · EPO · parallel ports | | |
| Parallel | up to 3 units, N+1 | | |
| Environment · clearance | 32–104 °F (0–40 °C) · RH < 95 % · 3,300 ft (1,000 m) at full power · 20 in (0.5 m) clear on each side, vents open | | |
| W × D × H in | 9.8 × 23.6 × 29.1 | | 13.7 × 25 × 47.2 |
| W × D × H mm | 249 × 599 × 739 | | 348 × 635 × 1,199 |
| Weight | 196.2 lb (89 kg) | 235.9 lb (107 kg) | 452 lb (205 kg) |
| Standards | UL 1778 standard | | |
| Warranty | 3 years on the UPS · 2 years on VRLA batteries | | |

## Options

BB4US

**Battery cabinet, 192 V DC**

Up to 80 × 12 V 9 Ah blocks: empty, or with 32, 64 or 80 installed. 9.8 × 33.5 × 28.5 in, 110 lb empty.

SNMP-M

**SNMP card**

Web pages, SNMP v1/v2c/v3, Modbus TCP/IP and MQTT.

DRYCNT

**Dry-contact card**

Signals as voltage levels from the card's 12–24 V DC supply: UPS fault, warning, bypass, battery low, normal mode, utility fault; a remote shutdown input.

The 20 kVA also comes with its battery compartment supplied empty (FERSP20000-EMPTY), same electrical data. Subject to change without notice.

# Ordering Information
# FERRUS SP 6–20 kVA

**FERSP 10000 -16X9 +BB4US-32X9**

| series | rating in VA | battery: 16 × 12 V 9 Ah, internal | battery cabinet and its blocks |
|---|---|---|---|

**RATING**
6000, 10000 or 20000 VA

**BATTERY INSIDE**
-16X9 on the 6 and 10 kVA;
-40X9 or -EMPTY on the 20 kVA

**CABINET**
+BB4US-32X9, -64X9 or -80X9, on the 6 and 10 kVA

**EXAMPLES**

**FERSP6000-16X9**
FERRUS SP 6 kVA

**FERSP10000-16X9+BB4US-64X9**
10 kVA with a BB4US of 64 blocks

| Code | Description |
|---|---|
| **FERSP6000-16X9** | FERRUS SP 6 kVA split-phase online UPS, tower, internal batteries |
| **FERSP6000-16X9+BB4US-32X9** | FERRUS SP 6 kVA with BB4US cabinet, 32 × 12 V 9 Ah |
| **FERSP6000-16X9+BB4US-64X9** | FERRUS SP 6 kVA with BB4US cabinet, 64 × 12 V 9 Ah |
| **FERSP6000-16X9+BB4US-80X9** | FERRUS SP 6 kVA with BB4US cabinet, 80 × 12 V 9 Ah |
| **FERSP10000-16X9** | FERRUS SP 10 kVA split-phase online UPS, tower, internal batteries |
| **FERSP10000-16X9+BB4US-32X9** | FERRUS SP 10 kVA with BB4US cabinet, 32 × 12 V 9 Ah |
| **FERSP10000-16X9+BB4US-64X9** | FERRUS SP 10 kVA with BB4US cabinet, 64 × 12 V 9 Ah |
| **FERSP10000-16X9+BB4US-80X9** | FERRUS SP 10 kVA with BB4US cabinet, 80 × 12 V 9 Ah |
| **FERSP20000-40X9** | FERRUS SP 20 kVA split-phase online UPS, tower, internal batteries |
| **FERSP20000-EMPTY** | FERRUS SP 20 kVA, battery compartment supplied empty |
| **BB4US** | Battery cabinet, tower, 192 V DC, empty |
| **BB4US-32X9** | Battery cabinet, tower, 192 V DC, 32 × 12 V 9 Ah |
| **BB4US-64X9** | Battery cabinet, tower, 192 V DC, 64 × 12 V 9 Ah |
| **BB4US-80X9** | Battery cabinet, tower, 192 V DC, 80 × 12 V 9 Ah |
| **SNMP-M** | SNMP-M network card: web pages, SNMP v1/v2c/v3, Modbus TCP/IP and MQTT; for FERRUS, FERRUS RT, FERRUS SP, FERRUS SP RT, RADIANT, RADIANT-IB, CIRRO-IB and CIRRO |
| **DRYCNT** | Dry-contact card: status signals and a remote shutdown input |



FERRUS SP 6 · 10 kVA tower

+



BB4US battery cabinet

**32 · 64 · 80**

**Blocks in the BB4US**

12 V 9 Ah blocks: the cabinet is ordered empty or filled, BB4US-32X9 to -80X9. 9.8 × 33.5 × 28.5 in, 110 lb empty; 192 V DC, for the 6 and 10 kVA.