SPLIT-PHASE ONLINE UPS · ISOLATION TRANSFORMER

FERRUS SP RT

6–10 kVA

Online double conversion with an output isolation transformer, for 120/240 V split-phase loads: a rack unit with its battery packs, hardwired.



FERRUS SP RT 6 · 10 kVA, RACK OR TOWER

120/240 V
split-phase output

kVA = kW
output power factor 1

93 %
efficiency, up to

×3
units in parallel, N+1

Product Overview
FERRUS SP RT 6–10 kVA

ISOLATION

Isolation transformer

No wire runs from the supply to the loads: noise and faults on the mains stay on the mains side.

- isolated on the bypass too
- for mixed and motor loads

SPLIT-PHASE

120/240 V, four ways

Jumpers on the output terminals set the output for the site.

- two separate 120 V outputs
- one 240 V output, full rating

CLEAN POWER

Online double conversion

PFC input and IGBT inverter: sags and spikes never reach the load.

- input power factor > 0.99
- output THD < 2.5 %, up to 93 %

120/240 V split-phase

Two 120 V legs, 240 V across them.

Isolation transformer

The output isolated from the supply.

kVA = kW

Output power factor 1.

PFC input

Input power factor above 0.99.

Online, up to 93 %

Double conversion; ECO mode selectable.

Color touchscreen

Readings, settings, logs, two access levels.

Parallel ×3, N+1

Up to three units of one rating.

Rack or tower

19-inch, 4U and 5U, or standing upright.

Key data

	6 kVA	10 kVA
Power	6,000 VA / 6,000 W	10,000 VA / 10,000 W
Chassis	4U, 17.3 in wide	5U, 17.3 in wide
W × D × H	17.3 × 22.8 × 6.7 in	17.3 × 22.8 × 8.5 in
Weight	128 lb	143 lb
Battery	BAT16192RT packs, 1 to 4	BAT16192RT packs, 1 to 4
Backup, 1 pack, 100 % · 50 %	6 min · 14.3 min	3.2 min · 7.5 min
Backup, 4 packs, 100 %	34 min	17.9 min

INPUT
176–275 V AC, 40–70 Hz, PF > 0.99

OUTPUT
120/240 V split-phase, 60 Hz, THD < 2.5 %

EFFICIENCY
up to 93 %

PARALLEL
up to 3 units, N+1

STANDARDS
UL 1778 standard

FERRUS SP RT · FRONT VIEW

Front View
FERRUS SP RT 6–10 kVA



1 Color touchscreen
AEC interface: power flow, readings, settings, tests and logs.

2 Status LEDs
ALM, BYP, BAT, INV and buzzer mute.

3 Power button
On and off, as on the screen's Control page.

4 AEC badge
On the upper grille.

5 Front grilles
Air in at the front, out through the transformer fans at the back.

6 Handles
One on each side, for lifting into the rack.

7 Rack ears
19-inch mounting; 4U (6 kVA) or 5U (10 kVA).

Status LEDs

ALM	Alarm: lit on a fault or a warning	**BYP**	Bypass: lit while the load is on the bypass
BAT	Battery: lit while the battery supplies the load	**INV**	Inverter: lit while the inverter supplies the load
Mute	The buzzer is muted		

Normal operation: INV alone lit.

Rear View
FERRUS SP RT 6–10 kVA



1 Input breaker
Breaker of the split-phase input.

2 Cable entry
Input, output and battery cables, hardwired on the terminal strip: no wall plug, no outlets.

3 Parallel ports
Two ports for the parallel cables.

4 RS232
DB9 for monitoring software.

5 EPO
Normally closed loop: opening it stops the output.

6 RS485
Modbus link.

7 USB
Monitoring software.

8 Intelligent slot
SNMP-M card, or a dry-contact card on DB9 or terminal block.

9 Transformer fans
Cooling of the output transformer.

SAFETY
EPO, normally closed
Opening the EPO loop stops the output; wire a remote switch to it.

INSTALLATION
Hardwired
Split-phase input and output on the terminal strip behind the cable entry.

OPTIONS
Intelligent slot
SNMP-M network card, or a dry-contact card on DB9 or terminal block.

Touchscreen Interface
FERRUS SP RT 6–10 kVA

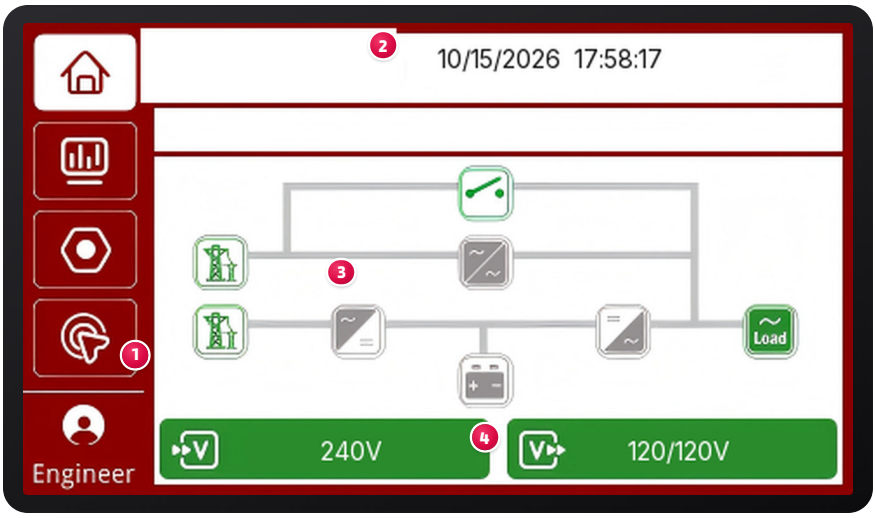

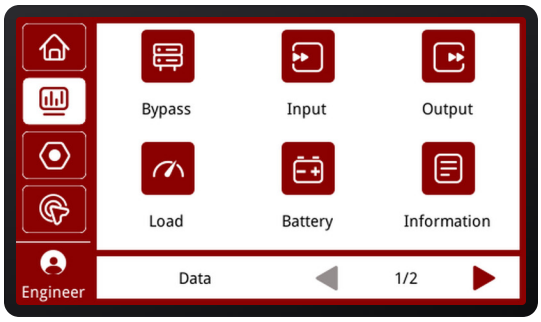

Data menu
Bypass, Input, Output, Load, Battery and Information; page 1 of 2.

1 Side menu
Home and Data pages and two more; the user level logged in below (Engineer).

2 Status bar
The current message, buzzer mute, date and time.

3 Power flow
Mains, bypass switch, rectifier, inverter, battery and load, each shown green or grey.

4 Input and output
Input voltage, and the output voltage of the two legs.

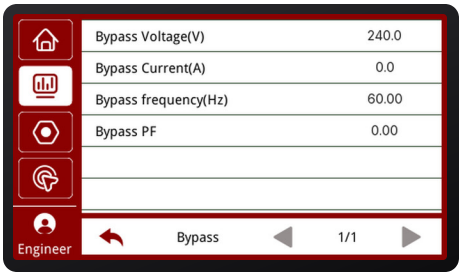

Data · Bypass
Bypass voltage, current, frequency and power factor.

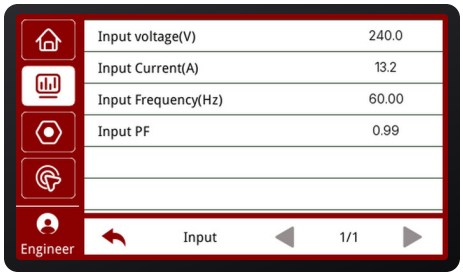

Data · Input
Input voltage, current, frequency and power factor.

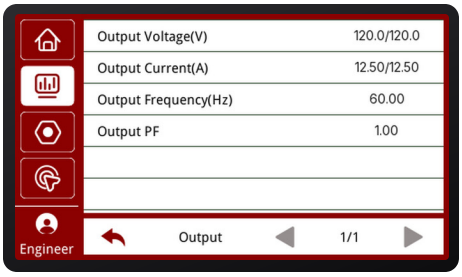

Data · Output
Voltage and current of the two legs, frequency and power factor.

Access and functions

Access levels
User: home, data, logs, mute. Engineer: settings and tests.

ECO mode
System mode E: the load on the bypass while the mains is good.

Battery self-test
A short discharge tests the batteries; a failure raises an alarm.

Cold start
No mains: COLD START, then ON/OFF: the UPS runs on battery.

The screens are the same on FERRUS SP and FERRUS SP RT.

Touchscreen Menus
FERRUS SP RT 6–10 kVA

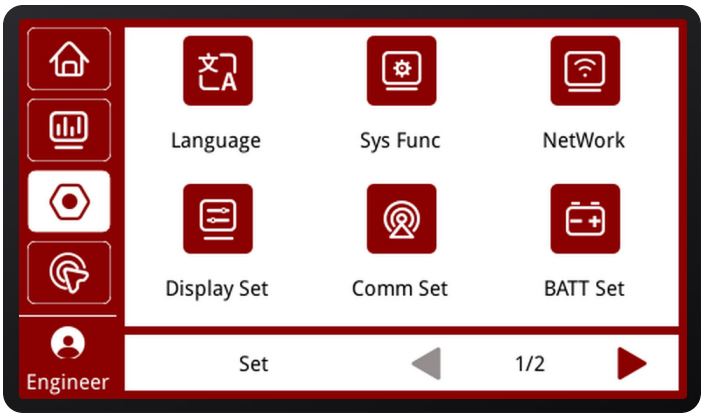

Set menu
Language, Sys Func, NetWork, Display Set, Comm Set and BATT Set; page 1 of 2.

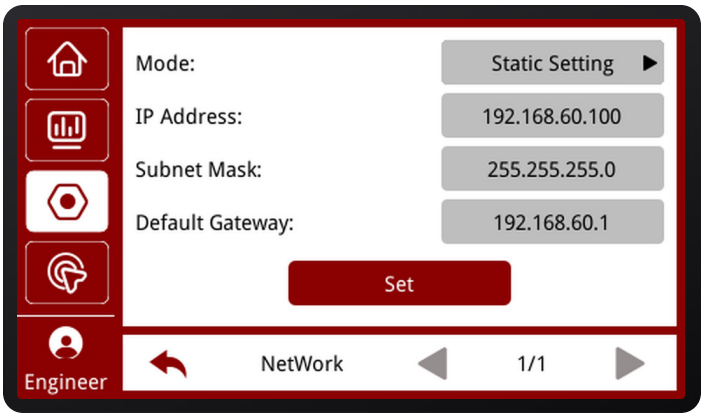

Set · NetWork
Mode Static Setting; IP address, subnet mask and default gateway, applied with Set.

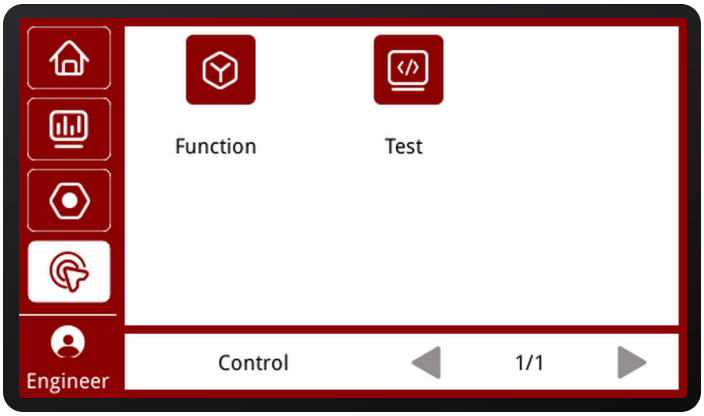

Control menu
Two pages: Function and Test.

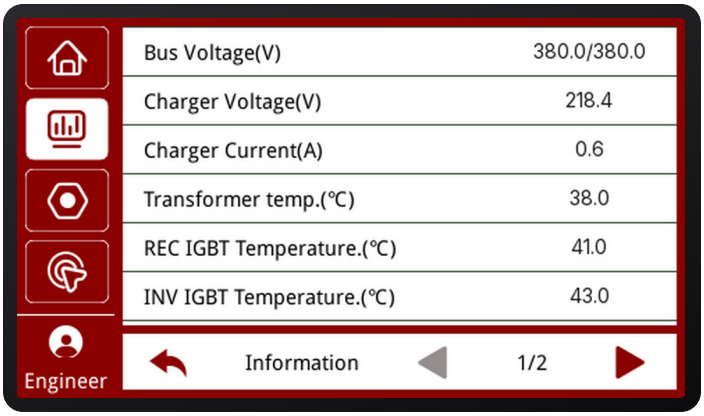

Data · Information
Bus, charger voltage and current; transformer, rectifier and inverter IGBT temperatures; page 1 of 2.

What the settings set

Rated values
Input and output voltage and frequency, set for the site.

Battery
Number of 12 V blocks, 10 to 20 (120–240 V DC), capacity in Ah and charger current.

System mode
Single, parallel with a unit ID, ECO, or self-aging.

Communication
RS-232 and RS-485: baud rate, ID 1 to 32 and protocol (Modbus).

Settings at the engineer level; new settings take effect after a restart.

Isolation Transformer Technology
FERRUS SP RT 6–10 kVA

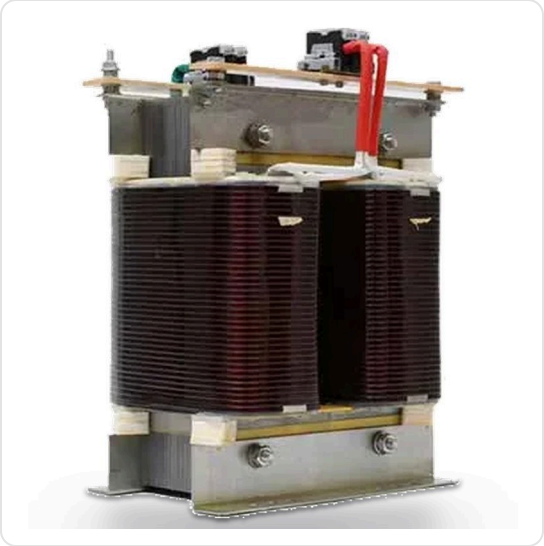

Galvanic isolation
No wire runs from the supply to the loads: the power crosses the transformer as a magnetic field, so noise and faults on the mains stay on the mains side.

120 V and 240 V from one UPS
Two secondary windings make the two 120 V legs; in series, 240 V. Jumpers on the output terminals choose the wiring.

Isolated on the bypass too
The bypass joins ahead of the transformer: the loads stay on its windings in bypass mode; mains disturbances are not filtered there.

For mixed and motor loads
120 V equipment and 240 V machines on the same UPS, as on a panel board.

Working principle

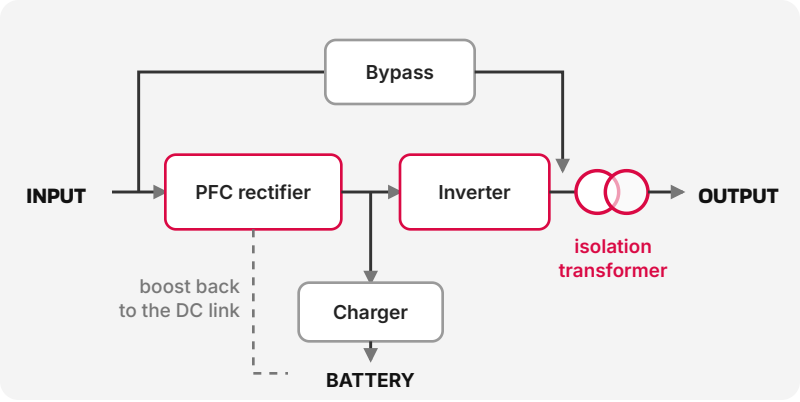

At the input, surge suppression (TVSS) and EMI/RFI filters; a 3-level IGBT inverter.

Operating modes

Line mode
PFC and inverter feed the load; the charger float-charges the battery.

Battery mode
Mains abnormal: the battery takes over without interrupting the output.

Bypass mode
Overload, over-temperature or a fault: the load moves to the bypass automatically.

ECO mode
System mode E: the load stays on the bypass while it is good.

Facts

180°
Between the two legs
L1–N1 and L2–N2 in opposition, as in a North American split-phase service.

110–127 V
Per leg
110, 115, 120 or 127 V on each leg; 220, 230 or 240 V from L1 to N2.

100 %
Of the rating on one output
One 120 V or one 240 V output carries the full rating; two separate 120 V outputs, 50 % each.

25 · 42 A
Per leg at 120 V
Output current of the 6 and 10 kVA models on each 120 V leg.

Output Configurations
FERRUS SP RT 6–10 kVA

Two 120 V legs from the isolation transformer; jumpers on the output terminals set the output for the site. In a parallel system every unit uses the same configuration.

01 Two separate 120 V outputs

Load 1 on L1–N1, load 2 on L2–N2; half the rating each.

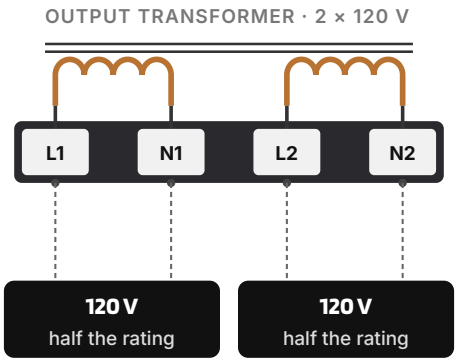

02 One 120 V output

L1 jumpered to L2 and N1 to N2: the full rating at 120 V.

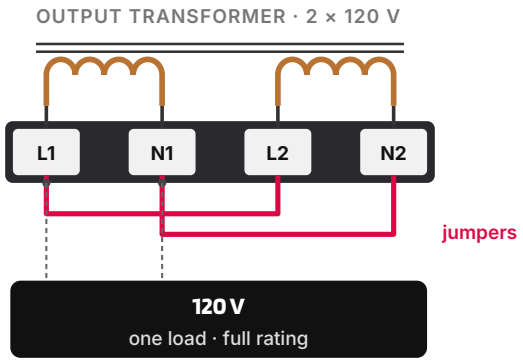

03 One 240 V output

N1 jumpered to L2: the full rating at 240 V, L1 to N2.

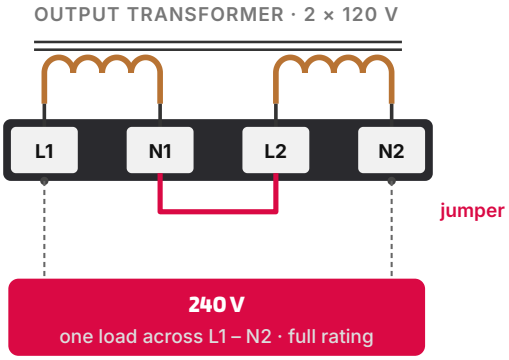

04 120 V and 240 V together

N1–L2 jumpered: 120 V on each leg, 240 V across.

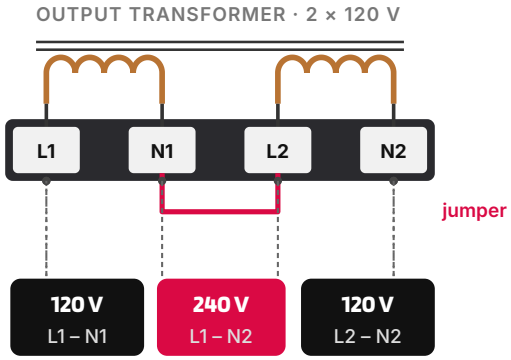

Terminal strip

PE	protective earth
I/P L1 · L2	split-phase input
O/P L1 · N1	120 V output, leg 1
O/P L2 · N2	120 V output, leg 2
BAT+ · BAT–	external battery

Hardwired

Input and output on the terminal strip behind the cable entry: no outlets on the rack unit.

Battery and Runtime
FERRUS SP RT 6–10 kVA

FERRUS SP RT draws its runtime from BAT16192RT packs, 16 × 12 V 9 Ah each at 192 V DC: one to four per UPS. Times at full load, new batteries.

Backup time at full load

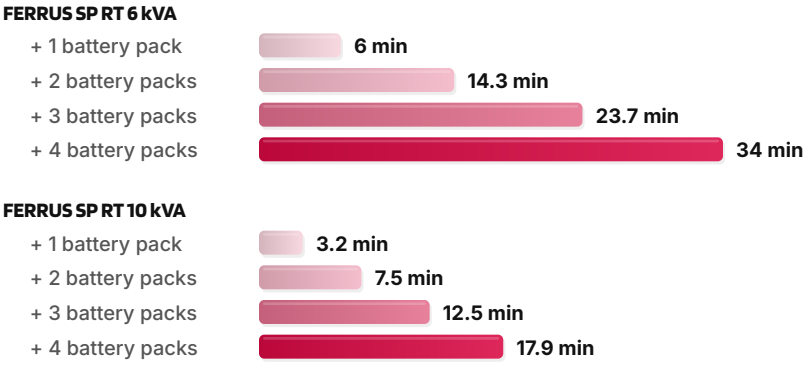

Runtime at 100 % load; at lighter loads it is longer.

The pack

Blocks	16 × 12 V 9 Ah VRLA, sealed
DC bus	192 V DC
Size	3U · 17.3 × 25 × 5.2 in (439 × 635 × 132 mm)
Weight	123.6 lb (56.1 kg)
Per UPS	one to four packs
Charger	1–8 A, set on the panel

Pack care

- The packs share the UPS's rack: keep its front and rear vents open.
- The care of the 12 V 9 Ah blocks is that of FERRUS SP, p. 44.

Backup time by load

Set-up	100 %	75 %	50 %	25 %
6 kVA + 1 battery pack	6	8.7	14.3	36
6 kVA + 2 battery packs	14.3	20.6	34	85.5
6 kVA + 3 battery packs	23.7	34.1	56.4	2 h 22
6 kVA + 4 battery packs	34	49	80.8	3 h 24
10 kVA + 1 battery pack	3.2	4.6	7.5	19
10 kVA + 2 battery packs	7.5	10.9	17.9	45.2
10 kVA + 3 battery packs	12.5	18.1	29.8	75
10 kVA + 4 battery packs	17.9	25.9	42.7	107.5

Adding battery packs



BAT16192RT battery pack, 3U, 17.3 in wide like the UPS: one to four per UPS.

01 One to four packs, each its own 192 V DC string of 16 blocks, the UPS's bus.

02 Pack cables to the battery terminals behind the cable entry.

03 Battery set-up, with the number of packs, entered on the touchscreen.

192 V
battery DC bus

12 V 9 Ah
VRLA blocks, sealed

1–8 A
charger, long-backup set-ups

10–20
blocks per string, set on the panel

Technical Specifications
FERRUS SP RT 6–10 kVA

Model	6 kVA	10 kVA
Power (VA / W)	6,000 / 6,000	10,000 / 10,000
INPUT		
Voltage · frequency	176–275 V AC at full load · 40–70 Hz	
Power factor	> 0.99 at full load	
Current, max.	36 A	63 A
OUTPUT		
Voltage	120/240 V split-phase (110 / 115 / 120 / 127 V per leg) · 240 V single output	
Regulation · frequency	1 % · 60 Hz, 0.1 % of nominal	
THD · crest factor	< 2.5 % at full linear load · 3 : 1	
Overload	110 % 10 min · 130 % 1 min · 150 % 30 s, then bypass	
Efficiency, up to	93 %	
Outlets	terminal strip	
BATTERY		
Configuration	BAT16192RT battery packs, 16 × 12 V 9 Ah each, 1 to 4 per UPS	
DC voltage	192 V DC	
Backup at 50 % · 100 %	1 pack: 14.3 min · 6 min	1 pack: 7.5 min · 3.2 min
GENERAL		
Communication	RS232 · RS485 · USB · intelligent slot (SNMP-M or dry contacts) · EPO · parallel ports	
Parallel	up to 3 units, N+1	
Environment	32–104 °F (0–40 °C) · RH < 95 % · 3,300 ft (1,000 m) at full power	
W × D × H in	17.3 × 22.8 × 6.7	17.3 × 22.8 × 8.5
W × D × H mm	439 × 579 × 170	439 × 579 × 216
Weight	128 lb (58.1 kg)	143 lb (64.9 kg)
Standards	UL 1778 standard	
Warranty	3 years on the UPS · 2 years on VRLA batteries	

Options

BAT16192RT

Battery pack, 3U

16 × 12 V 9 Ah VRLA blocks at 192 V DC, one to four per UPS. 17.3 × 25 × 5.2 in, 123.6 lb.

SNMP-M

SNMP card

Web pages, SNMP v1/v2c/v3, Modbus TCP/IP and MQTT.

DRYCNT

Dry-contact card

Signals as voltage levels from the card's 12–24 V DC supply: UPS fault, warning, bypass, battery low, normal mode, utility fault; a remote shutdown input.

Subject to change without notice.

Ordering Information
FERRUS SP RT 6–10 kVA

FERSPRT | **10000** | **-16X9** | **+BAT16192RT** | **x2**

FERSPRT	10000	-16X9	+BAT16192RT	x2
series	rating in VA	the battery string the UPS is set for: 16 × 12 V 9 Ah	battery pack	how many

RATING
6000 or 10000 VA: the 4U or the 5U chassis

BATTERY STRING
-16X9 on both: 16 × 12 V 9 Ah, 192 V DC

PACKS
+BAT16192RT for one 3U pack; x2, x3 or x4 for two to four

EXAMPLES

FERSPRT6000-16X9
FERRUS SP RT 6 kVA

FERSPRT10000-16X9+BAT16192RTx2
10 kVA with two battery packs

Code	Description
FERSPRT6000-16X9	FERRUS SP RT 6 kVA, rack / tower; packs added with +BAT16192RT
FERSPRT6000-16X9+BAT16192RT	FERRUS SP RT 6 kVA with 1 × BAT16192RT battery pack
FERSPRT6000-16X9+BAT16192RTx2	FERRUS SP RT 6 kVA with 2 × BAT16192RT battery packs
FERSPRT6000-16X9+BAT16192RTx3	FERRUS SP RT 6 kVA with 3 × BAT16192RT battery packs
FERSPRT6000-16X9+BAT16192RTx4	FERRUS SP RT 6 kVA with 4 × BAT16192RT battery packs
FERSPRT10000-16X9	FERRUS SP RT 10 kVA, rack / tower; packs added with +BAT16192RT
FERSPRT10000-16X9+BAT16192RT	FERRUS SP RT 10 kVA with 1 × BAT16192RT battery pack
FERSPRT10000-16X9+BAT16192RTx2	FERRUS SP RT 10 kVA with 2 × BAT16192RT battery packs
FERSPRT10000-16X9+BAT16192RTx3	FERRUS SP RT 10 kVA with 3 × BAT16192RT battery packs
FERSPRT10000-16X9+BAT16192RTx4	FERRUS SP RT 10 kVA with 4 × BAT16192RT battery packs
BAT16192RT	Battery pack, 3U rack, 192 V DC, 16 × 12 V 9 Ah
SNMP-M	SNMP-M network card: web pages, SNMP v1/v2c/v3, Modbus TCP/IP and MQTT; for FERRUS, FERRUS RT, FERRUS SP, FERRUS SP RT, RADIANT, RADIANT-IB, CIRRO-IB and CIRRO
DRYCNT	Dry-contact card: status signals and a remote shutdown input

Choose the rack: FERRUS SP RT · 4U · 5U, 17.3 in wide

- In the 19-inch rack with the servers, or as a tower.
- 1–4 BAT16192RT packs of 3U; backup on p. 55.
- Rails: ask AEC for the kit matched to the unit.

Choose the tower: FERRUS SP · 6–20 kVA, p. 37

- 20 kVA in one unit, 40 blocks inside or supplied empty.
- 6 and 10 kVA: 16 blocks inside; BB4US cabinets, up to 80 blocks.
- No rack needed: it stands on the floor.



FERRUS SP RT, rack or tower

+



BAT16192RT battery pack, 3U

× 1–4

Packs per UPS

16 × 12 V 9 Ah per pack, the same 192 V DC string as the UPS bus. Each pack 3U, 17.3 × 25 × 5.2 in, 123.6 lb. Pictures not to scale.