MODULAR ONLINE UPS · THREE-PHASE 480 V, 3-WIRE

INFINITE

80–200 kVA

Modular three-phase online double-conversion UPS for 480 V 3-wire + PE supplies: hot-swappable 100 kW power modules, a 7-inch color touchscreen and parallel operation of up to 8 cabinets.



User Manual

Installation · Operation · Maintenance

INFINITE 80 kVA | 100 kVA | 135 kVA | 160 kVA | 200 kVA | 100 kW power module

COPYRIGHT AND NOTICES

Copyright © 2026 AEC UPS USA LLC. All rights reserved. No part of this document may be reproduced or transmitted in any form or by any means without the prior written consent of AEC UPS USA LLC.

Trademarks. AEC and INFINITE are trademarks of AEC UPS USA LLC. All other trademarks and trade names mentioned in this document are the property of their respective owners.

Notice. The products, services and features you purchase are defined by the contract between AEC and the customer; some of those described in this document may not be included in your purchase or use. Unless the contract says otherwise, all statements, information and recommendations in this document are provided “as is”, without warranties, guarantees or representations of any kind, express or implied. The information in this document may change without notice. Every effort has been made to ensure its accuracy, but nothing in it constitutes a warranty of any kind, express or implied. The illustrations are for reference: the actual product may differ slightly.

AEC UPS USA LLC
4872 SW 72nd Ave, Miami, FL 33155
Technical support, 24/7 · phone and WhatsApp: **+1 786 553 2100**
service.us@aecups.com · sales@aecups.com · aecups.com

AEC-UM-INF-US · Rev. B · November 2026. Rev. B restores the touchscreen menu tree, the full lithium-battery maintenance checklist and the detailed start-up checks, replaces the network-card text with the AEC SNMP-L card, corrects the battery-current, cable and breaker tables to NEC, adds call-out pictures for every panel, port, breaker state and screen, and removes factory references.

BEFORE YOU START

About this manual

Thank you for choosing an AEC INFINITE UPS. This manual describes the INFINITE 480 V modular UPS, 80–200 kVA per cabinet: safety, the product and its options, planning, installation, operation of single, parallel and BSC systems, the touchscreen, maintenance, the AEC SNMP-L network card, disposal and the specifications. Read it before you start, and keep it near the UPS.

MODELS COVERED

INFINITE cabinets of 80, 100, 135, 160 and 200 kVA, three-phase 480 V, 3-wire + PE, with hot-swappable 100 kW power modules and external batteries (lead-acid or AEC L6 lithium). Ordering codes: Table D-1.

WHO THIS MANUAL IS FOR

Qualified electricians install and wire the UPS. An engineer approved by AEC commissions it. Trained operators use it every day: they read the touchscreen and follow the procedures of the operation chapter. Settings marked “AEC service” are made only by AEC.

Safety messages

Safety messages in this manual follow ANSI Z535.6. The signal word tells how serious the hazard is:

DANGER	A hazardous situation which, if not avoided, **will** result in death or serious injury.
WARNING	A hazardous situation which, if not avoided, **could** result in death or serious injury.
CAUTION	A hazardous situation which, if not avoided, could result in minor or moderate injury.
NOTICE	Information about practices that could damage the equipment, lose data, reduce performance or give unexpected results — not related to injury.

Other conventions

i NOTE Additional information that stresses or completes the text.

✓ TIP A hint that helps you solve a problem or save time.

Keys are shown like [ON]; menus like **Settings › Battery**. Numbers in red circles on a picture are explained in the list under it. Cross-references in red are links in the PDF.

QUICK START

From delivery to load in seven steps

The short version — each step points to the full instructions. Read the safety chapter first.

1. **Unpack and check** the packaging, the tilt and shock labels and the deliverables. Section 4.2, page 48.
2. **Prepare the site:** floor, working space (NEC 110.26), environment, ventilation. Section 4.3, page 49.
3. **Move the cabinet** with a forklift from the side, or lift it by the eye bolts — never by the door or the panels. Section 4.4, page 52.
4. **Place the cabinet** and fit the options (seismic kit, SNMP-L card, parallel kit, SPD). Section 4.5, page 54, Section 4.6, page 56.
5. **Size breakers and conductors** to NEC and connect PE first, then utility, bypass, output and battery, then the signal cables. Table 4-6, page 67, Section 4.7.5, page 69.
6. **Inspect** the installation against the checklist. Section 4.8, page 81.
7. **Start the UPS** with the switches in order, start the inverter from the touchscreen, then switch on the loads. Section 5.1.2, page 82.

480 V	100 kW	7 in	Up to 8
three-phase, 3-wire + PE, 60 Hz	hot-swappable power modules, N+1	color touchscreen	cabinets in parallel

CONTENTS

Contents

1 Safety 7
1.1 General instructions 7
1.2 Personal safety 8
1.3 Equipment safety 9
1.4 Mechanical safety 10
1.5 Electrical safety 12
1.6 Operational safety 14
1.7 Maintenance safety 14
1.8 Transport 14
1.9 Storage 14
1.10 Standards 15

2 Product description 17
2.1 Introduction 17
2.2 The cabinet 20
2.3 Operation panel 21
2.4 Inside the front door 23
2.5 Power module 27
2.6 Bypass module 27
2.7 System control box 28
2.8 Working principle and operating modes 33
2.9 Switches and breakers 36
2.10 Options 37
2.11 Alarms and protections 41

3 Planning the installation 46
3.1 Sizing the load 46
3.2 Estimating the runtime 46
3.3 Running on a generator 47
3.4 Site and supply checklist 47

4 Installation 48
4.1 Installation process 48
4.2 Unpacking and checking 48
4.3 Preparing the site 49
4.4 Moving the cabinet 52
4.5 Placing the UPS 54
4.6 Installing the options 56
4.7 Electrical connection 63
4.8 Installation inspection 81

5 Operation 82
5.1 Single UPS 82
5.2 Parallel system 86
5.3 BSC system 88

6 The touchscreen 90
6.1 Menu tree 91
6.2 Main page 92
6.3 Measurements 95

6.4 Info manage 96
6.5 Setting manage 99
6.6 Inverter ON / OFF 115

7 Maintenance and troubleshooting 116
7.1 Maintenance bypass 116
7.2 Replacing a power module or the bypass module 118
7.3 Replacing the system monitoring card 119
7.4 Replacing the touchscreen 119
7.5 Maintenance checklists 120
7.6 Battery tests 123
7.7 Maintenance schedule 125
7.8 Troubleshooting 125

8 Network monitoring — the SNMP-L card 127
8.1 The card 127
8.2 Setting up the card 128
8.3 AEC monitoring software 128
8.4 Other ways to monitor 129

9 Removal and disposal 130
9.1 Removing the UPS 130
9.2 Disposal 130

A Specifications 131
A.1 UPS specifications 131
A.2 Module specifications 134

B Warranty 136

C Acronyms and abbreviations 137

D Ordering codes 138

E Drawings 139

F Frequently asked questions 147

G Installation record 148

01

CHAPTER 1

Safety

Read this chapter before you install, operate or service the UPS. Safety messages also appear in the chapters where each task is described.

⚠ *WARNING · IMPORTANT SAFETY INSTRUCTIONS — SAVE THESE INSTRUCTIONS*

This manual contains important instructions for the installation, operation and maintenance of the INFINITE UPS. Read it before installation. Do not put the UPS into service until an engineer approved by AEC has commissioned it.

1.1 General instructions

⚠ *CAUTION*

Read the safety notices and the operating instructions of this chapter before you work on the equipment.

The DANGER, WARNING and CAUTION messages in this manual do not cover every safety rule. They complete the general safety rules of your site and of the codes that apply.

i NOTE AEC is not responsible for damage caused by ignoring general safety practice or the safety standards of design, manufacture and use.

AEC assumes no responsibility in the following cases:

- Damage from force majeure: earthquake, flood, volcanic eruption, mudslide, lightning, fire, war, armed conflict, hurricane, tornado, extreme weather or other natural disaster.
- Operation outside the conditions given in this manual.
- An installation site or environment that does not comply with the applicable national, regional or local codes and standards.
- Installation or operation by unqualified personnel.
- Failure to follow the instructions and safety warnings of the product and its documentation.
- Unauthorized disassembly or modification of the product, or alteration of its software or firmware.
- Damage in transport arranged by the customer.
- Damage from storage that does not meet the requirements of this manual (Section 1.9).
- Materials or tools supplied by the customer that do not meet the applicable laws, regulations and standards.
- Damage from negligence, willful misconduct, improper operation or any cause not attributable to AEC.

1.2 Personal safety

DANGER

- Never install or remove cables while the equipment is energized. Contact between a conductor and the cable core can cause an arc, fire, equipment damage or injury.
- Do not wear conductive items — watches, bracelets, rings, necklaces — while you work on the equipment: they can cause electric shock or burns.
- Use only insulated tools rated for the voltage. Their insulation must comply with the applicable codes and standards.

WARNING

Wear personal protective equipment (PPE): protective clothing, insulated footwear, a hard hat and insulated gloves, and arc-flash protection as required by NFPA 70E.

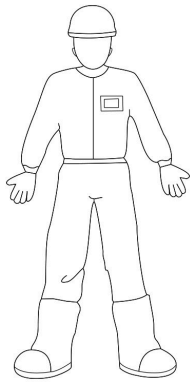

FIGURE 1-1 Personal protective equipment

- Only qualified personnel install, operate and maintain the equipment. They have basic electrical training, know how the equipment works and is built, have installation and operating experience and safety training, and can recognize hazards and act correctly.
- Do not defeat the protective devices of the equipment and do not ignore the warnings and precautions of this manual and of the labels.
- Do not touch conductors directly, or through wet objects. Measure the voltage at the contact point before you touch any conductor or terminal.
- Keep fingers and tools away from running fans.
- In case of fire, leave the building or the equipment area, raise the fire alarm and call the emergency number.

1.3 Equipment safety

1.3.1 UPS safety

i NOTE

- The INFINITE is an FCC Class A product (Section 1.10.1) for commercial, light-industrial and industrial sites on low-voltage systems that do not directly supply residential buildings. Additional measures may be needed to suppress interference.
- For supplies critical to major economic interests or public order — data centers, national computing centers, emergency command centers, railway signaling, air-traffic control and airport command centers, financial clearing and trading centers — use a Tier III or Tier IV architecture to TIA-942, with dual power paths to the load.
- Do not run the UPS in unenclosed or semi-enclosed spaces within 2.3 mi (3.7 km) of the ocean, or where temperature and humidity are not controlled: simple equipment rooms, homes, garages, corridors, cabinets ventilated with outside air, roof-only shelters, station platforms, gyms, aquariums.
- Once the UPS is unpacked, power it up and run it as soon as possible.
- The UPS feeds resistive, capacitive and slightly inductive loads. Do not use it for purely capacitive or purely inductive loads, half-wave rectifier loads, or motor loads such as air conditioners, blowers, starters, drills, motors and fluorescent lamp banks. It is not suitable for regenerative (backfeed) loads.
- The distribution ahead of the UPS must provide shock protection as required by UL 1778 and NFPA 70. Breakers with ground-fault (residual-current) trip are not recommended on the UPS feeds.
- A utility voltage above 600 V AC rms can damage the UPS.
- Stopping the inverter by hand, or changing the output voltage or frequency setting, can affect the supply to the load.

1.3.2 Battery safety

⚠ *DANGER*

- Only qualified personnel familiar with batteries may work on them. Keep unauthorized people away.
- The battery string is 360 to 600 V DC (lead-acid) or 384 to 640 V DC (lithium). This voltage is lethal. Battery terminals stay live when the UPS is off.

⚠ *CAUTION*

Always follow the battery manufacturer's instructions, in particular for the wiring.

- Do not use a battery whose packaging is damaged, whose terminals are dirty, corroded or rusty, or whose case is cracked, deformed or leaking.
- Use batteries of the same brand, model and number only.
- Keep batteries away from high temperature, direct sunlight, high humidity, corrosive atmospheres and heat sources.
- Do not drop, strike, puncture or crush batteries. Do not disassemble, modify or damage them: they can leak, release flammable gas, catch fire or explode.
- Do not lift or pull a battery by its terminals.
- Lead-acid batteries release flammable gas. Ventilate the battery room and provide fire protection (NFPA 70 Article 480, IEEE 1635).
- Tighten the terminal screws to the torque of the battery maker and check them regularly. Loose terminals cause poor contact, arcing and heat, and can start a fire.

- Recharge the battery promptly after a discharge: a battery left discharged is damaged.
- Check whether the battery is grounded. If it is, remove the ground connection: touching a grounded battery can cause electric shock. The INFINITE battery has no neutral or midpoint connection.
- Make sure the charge voltage set in the UPS matches the battery. If in doubt, call AEC service.
- Never short-circuit the positive and negative terminals of a block or of the string. Do not touch two terminals, or two bare cable ends, at the same time. Cover exposed terminals with insulating tape while you work.
- Prevent electrolyte spills from lead-acid batteries. Electrolyte corrodes metal and circuit boards and causes short circuits; it irritates and burns skin. On skin contact rinse at once with plenty of water and seek medical care. If you find a spill, call AEC service. Personnel wear goggles, rubber gloves, a respirator and protective clothing, follow the battery maker's instructions, and neutralize and absorb the electrolyte with sodium bicarbonate ($NaHCO_3$) or sodium carbonate (Na_2CO_3).

i NOTE

- If a battery is hotter than 140 °F (60 °C), check it for electrolyte leakage and deal with any leak at once.
- At the end of its life a battery can short internally, lose electrolyte or corrode its positive grid. This can lead to thermal runaway, swelling or leakage. Replace it promptly.
- Provide fire-fighting means — dry sand or CO_2 extinguishers — when the battery is installed and commissioned. Once it is in service, the battery room needs a fire-protection system that complies with local codes, in automatic or manual mode.
- Dispose of used batteries according to local regulations. Never put them in household waste.

1.4 Mechanical safety

⚠ DANGER

Work at height only with a hard hat and a safety harness or lanyard fixed to a firm, stable structure. Never anchor to moving or unstable objects, or to sharp metal edges.

⚠ WARNING

- Use tools that are certified and within their inspection date. Do not use damaged tools or overload them.
- Fix the cabinet securely before you work on it, so that it cannot tip over.
- When you pull equipment out of a rack or cabinet, watch for heavy or unstable parts that could fall.
- Do not drill holes in the equipment. Drilling damages the seals, the shielding, internal parts and cables, and metal chips cause short circuits on the boards.

- Repair paint scratches from transport and installation promptly. Do not leave scratched areas exposed.
- Do not weld, cut or flame-work on the equipment without an evaluation by AEC.
- Do not install other equipment on top of the UPS without an evaluation by AEC.
- When people work above the UPS, protect its top against falling objects.
- Use the right tools, the right way.

1.4.1 Heavy lifting

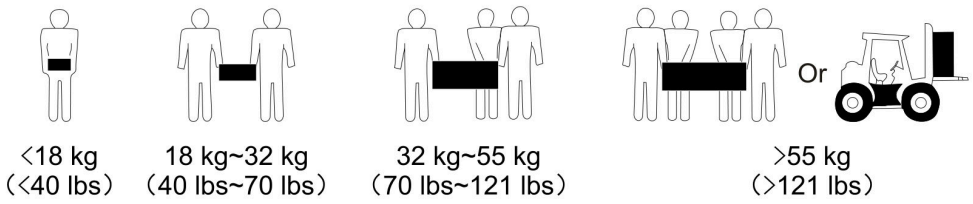

FIGURE 1-2 Number of people for a given weight

- Lift slowly and smoothly. Do not jerk or twist your body.
- Hold the equipment by its handles or under its bottom edge.
- Move heavy objects slowly and steadily. Set them down gently, without impact, so that you do not scratch the surface or damage internal parts and cables.
- Take special care on workbenches, slopes, stairs and slippery floors. Make sure doorways are wide enough, to avoid hitting the equipment or your fingers.
- Without a freight elevator, keep a large cabinet upright, tilted no more than 15°; never lay it down. Ask a specialist for the handling method.

1.4.2 Work at height

i NOTE

- Work more than 6.6 ft (2 m) above the floor is work at height.
- Stop work at height when scaffolding is wet from rain or other hazards exist. Before work resumes, the safety officer and the technicians inspect all equipment.
- Mark the danger zone below work at height and keep unauthorized people out.
- Put guardrails and warning signs around openings and holes.
- Do not store scaffolding, planks or debris below the work area. Nobody stands or walks directly below it.
- Never throw objects down or up. Use slings, hoists, lifting platforms or cranes.
- Avoid simultaneous work on upper and lower levels. If it is unavoidable, install a protective deck between levels. Do not stack tools and materials on upper levels.
- Follow all safety rules for work at height. Accidents caused by breaking these rules are not AEC's responsibility.
- No horseplay or resting in the work area.

1.4.3 Ladders

i NOTE

- Use wooden or insulated ladders near live parts.
- Prefer platform ladders with guardrails; avoid straight ladders.
- Check the ladder's condition and load rating before use. Never overload it.
- Set the ladder on a firm surface and have a second person hold it.

- Keep your balance: your center of gravity stays inside the ladder rails.
- On a stepladder, make sure the spreader or rope is locked.
- A straight ladder stands at 75° (Figure 1-3). Protect its feet against slipping. Do not stand above the fourth rung from the top. To reach a platform, the ladder extends at least 3.3 ft (1 m) above it.

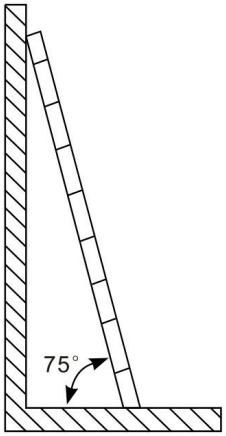

FIGURE 1-3 Straight ladder at 75°

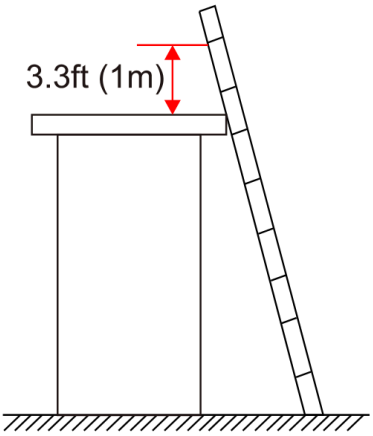

FIGURE 1-4 At least 3.3 ft (1 m) above the platform

1.4.4 Hoisting

- Only trained, qualified personnel do hoisting work.
- Fence the lifting area and put up warning signs.
- The ground must carry the crane and the load.
- Fix the lifting gear to a load-rated anchor before lifting.
- Never stand or walk under the boom or the load.
- Do not drag wire ropes or lifting gear, and do not strike them with hard objects.
- The angle between two slings must not exceed 90° (Figure 1-5).

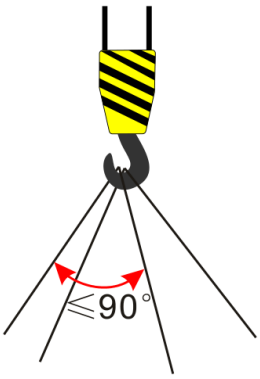

FIGURE 1-5 Angle between slings 90° or less

1.5 Electrical safety

DANGER

Before you make any electrical connection, check that the equipment is not damaged. A damaged unit can cause electric shock or fire.

⚠ WARNING

- Do not swap the ground conductors, the line conductors and the parallel connection points: this causes a short circuit.
- The equipment must be well grounded.

- Put up warning signs or barriers around the work area.
- Install, operate and maintain the equipment in the order of this manual. Do not modify it, add to it or change the installation sequence without authorization.
- Open the UPS and its upstream and downstream breakers before you connect or remove power cables.
- Damage from incorrect connections is not covered by the warranty.
- With all external power off, the internal capacitors can still hold a charge and the output bus bars can still be live. Wait 10–15 minutes before you open the UPS, then check with a meter.
- All connections must comply with NFPA 70 (NEC) and the local codes of the site.

i NOTE Changing the system configuration, structure or parts can affect the UPS's performance. Ask AEC service first.

1.5.1 Grounding

⚠ WARNING

- Ground the equipment before you make any other electrical connection. The grounding terminal must be bonded to the grounding electrode system.
- Connect the grounding conductor first when you install, and disconnect it last when you remove the UPS.
- Do not damage the grounding conductor.
- The equipment is permanently connected to the equipment grounding conductor. Check the ground connection before operation.

1.5.2 Wiring

- Select, support and route cables according to NFPA 70 and local codes.
- Use flame-retardant cables.
- All conductors are firmly connected, well insulated and correctly sized.
- Keep cables at least 1.2 in (30 mm) from heat sources: heat ages the insulation.
- Bundle cables of the same type together. Keep cables of different types at least 1.2 in (30 mm) apart; do not twist or cross them.
- Dress large bundles neatly, without avoidable crossings. Keep bundles straight, with ties at the same height on horizontal runs, and tie both sides of every bend.
- Below 32 °F (0 °C) cable jackets become brittle and can crack. Lay and install cables above 32 °F (0 °C) and handle them gently in the cold. If cables were stored below 32 °F (0 °C), keep them indoors for more than 24 hours before you lay them.

1.5.3 Electrostatic discharge

⚠ CAUTION

Static from the human body can damage the electronic parts on the boards. Wear antistatic gloves or a grounded wrist strap before you touch boards, plug-in cards or chips.

- Hold a board by its edges; never touch its components.

- Pack removed boards in antistatic packaging for storage or transport.

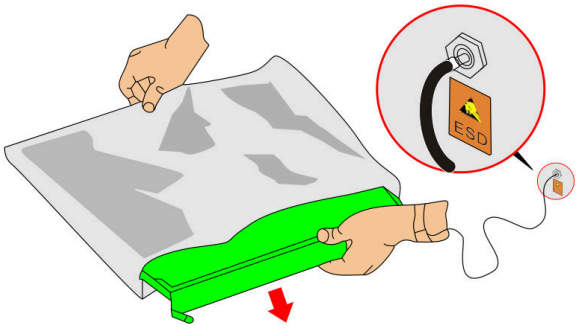

FIGURE 1-6 Handling a board with a grounded wrist strap

1.6 Operational safety

DANGER

High voltage is present in the equipment. Contact can cause electric shock. Do not touch any terminal or internal part while the UPS runs.

1.7 Maintenance safety

CAUTION

Improper maintenance can cause injury or equipment damage.

- Put up warning signs or tape to keep unrelated people out of the work area.
- Put warning signs (lockout/tagout) on the upstream and downstream breakers so that nobody closes them by mistake.
- Before maintenance, make sure there is no voltage or current at the UPS input and output, and wear protective equipment.
- Restart the equipment only after any fault that affects its safety has been fixed.
- Parts stay hot after shutdown. Let them cool and wear protective gloves.
- Do not replace internal parts without authorization from AEC. Damage from unauthorized replacement is not covered.
- Electric shock hazard: do not touch the supply conductors or the internal contacts and terminals connected to them.

1.8 Transport

- Do not carry the packed product in open trucks or open holds over long distances, and do not store it in the open during transit. Do not ship it with flammable, explosive or corrosive goods. Protect it from rain, snow, liquids and mechanical damage.
- The packed product can travel by road, rail, sea and air. Pack it against moisture, dust, vibration and chemical corrosion.
- Do not stack packed units in transport.

1.9 Storage

- Store the UPS in its original packaging, at −13 to 131 °F (−25 to 55 °C) and 0 to 95 % RH, non-condensing. Keep toxic gases, flammable or explosive objects and corrosive chemicals out of the store. Protect the UPS from vibration, impact and strong magnetic fields.

- Keep the carton 3.9 in (10 cm) off the floor, and at least 19.7 in (50 cm) from walls, heat and cold sources, windows and air inlets. Replace damaged or pest-damaged packaging promptly.
- Do not tilt or turn the carton upside down.
- Unless other rules apply, store for up to 6 months. After 6 months, inspect the batch. In long storage, charge the battery every 3 months.



FIGURE 1-7 Storage: no fire, no explosives, no corrosives; –13 to 131 °F (–25 to 55 °C) without battery; 0–95 % RH, no condensation

⚠ CAUTION

Store the equipment as required here. Damage from wrong storage is not covered by the warranty.

1.10 Standards

The UPS is listed to UL 1778 (file number pending). It is designed according to the following standards.

TABLE 1-1 Design standards

Standard	Subject
UL 1778	Uninterruptible power systems — safety (North America); listed to UL 1778 (2024 edition), file number pending (Table A-10)
IEC 62040-1	UPS — general and safety requirements
IEC 62040-2	UPS — electromagnetic compatibility (EMC)
IEC 62040-3	UPS — performance and test requirements
IEC 61000-3-11	Voltage fluctuations and flicker
IEC 61000-4-2	Immunity to electrostatic discharge
IEC 61000-4-3	Immunity to radiated electromagnetic fields
IEC 61000-4-4	Immunity to electrical fast transients / bursts
IEC 61000-4-5	Immunity to surges
IEC 61000-4-6	Immunity to conducted disturbances
IEC 61000-4-8	Immunity to power-frequency magnetic fields
IEC 63000	Restriction of hazardous substances (RoHS) — technical documentation
FCC Part 15, Class A	Radio-frequency emissions (Section 1.10.1)
NFPA 70 (NEC)	Installation: branch circuits and feeders, conductors, working space, battery systems (Article 480)

i NOTE IEC 61000-3-12 (harmonic currents) covers equipment up to 75 A per phase only. Every INFINITE model draws more than 75 A per phase, so it does not apply; the input current distortion is given in Table A-4.

1.10.1 FCC statement

This equipment has been tested and found to comply with the limits for a Class A digital device, pursuant to Part 15 of the FCC Rules. These limits are designed to provide reasonable protection against harmful interference when the equipment is operated in a commercial environment. This equipment generates, uses and can radiate radio-frequency energy and, if not installed and used in accordance with this manual, may cause harmful interference to radio communications. Operation of this equipment in a residential area is likely to cause harmful interference, in which case the user will be required to correct the interference at his own expense.

02

CHAPTER 2

Product description

What the system is and how it is configured, the cabinet, the operation panel, the modules and the system control box, the operating modes, the options and the alarms.

2.1 Introduction

INFINITE is a modular online double-conversion UPS for 480 V three-phase, 3-wire + PE supplies. A cabinet holds the power modules, a bypass module, the system control box, the switches and the distribution parts. Power modules can be added, removed or replaced online, without stopping the load. INFINITE is a pure sine-wave UPS for critical loads and precision equipment.

TABLE 2-1 INFINITE at a glance

Feature	What it gives you
100 kW power modules	One module in the 80 and 100 kVA cabinets, two in the 135, 160 and 200 kVA cabinets, plus room for one redundant module (N+1). Hot-swappable.
Output power factor 1	kVA = kW at the default output power factor 1.0 (settable 0.8 to 1.0, Table A-7).
Efficiency	Up to 97.0 % online at 50 % load; up to 99 % in ECO mode (Table A-3).
Input	Power factor above 0.99, input current distortion below 3 % at full load.
Parallel and BSC	Up to 8 cabinets in parallel; dual-bus (BSC) systems for the highest availability.
Touchscreen	7-inch color touchscreen, five indicators, ON and OFF key pairs, status light bar; 10,000 event records.
Battery	External lead-acid (30 to 50 blocks of 12 V) or AEC L6 lithium cabinets with BMS communication.

2.1.1 Typical configurations

TABLE 2-2 Typical configurations

Configuration	Application
Single UPS	Common loads. Several power modules share the load; a redundant module keeps the system reliable.
Parallel	Large data centers and important loads: high reliability and strong overload capacity.
BSC system	Important loads such as medium and large computer rooms and data centers: higher reliability than a parallel system, but a more complex configuration. Dual-bus and multi-bus modes.

Single UPS. Choose the number of power modules for the load. The modules share the load evenly, so the failure of one module does not stop the others. With a redundant module the UPS stays highly reliable on its own.

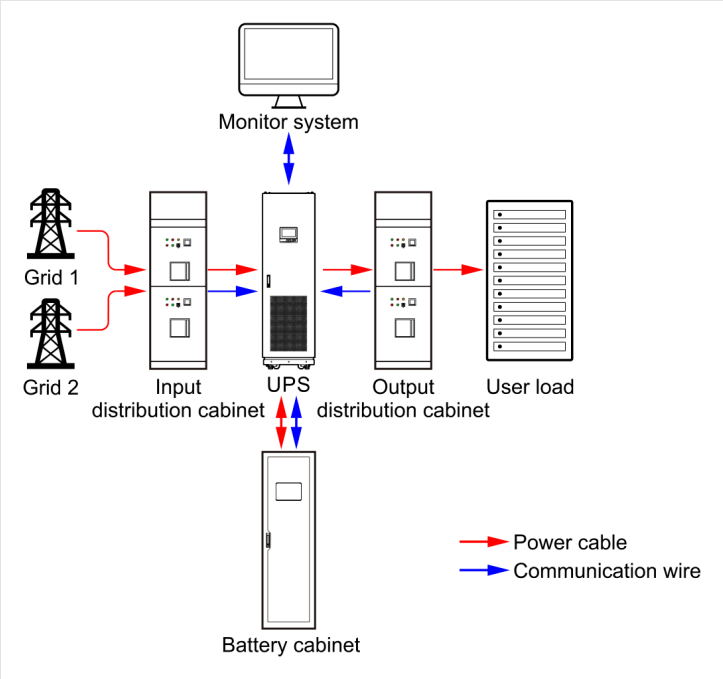

FIGURE 2-1 Single UPS — grid 1 and grid 2 through the input distribution, battery cabinet, output distribution to the load

Parallel system. The utility inputs, bypass inputs and outputs of the cabinets are connected in parallel. The central control (system control card) of each cabinet is linked to the others by the parallel cables, so the outputs stay synchronized and share the load. If one cabinet fails, the others go on feeding the load.

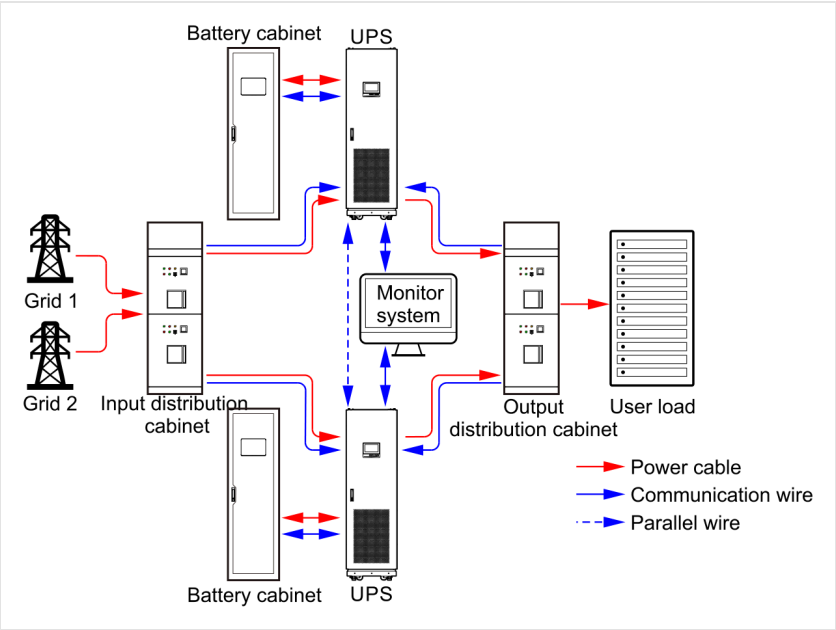

FIGURE 2-2 Parallel system — each UPS with its battery cabinet, parallel cable between cabinets

BSC system. A bus synchronization controller (BSC) keeps the outputs of independent UPS systems on different buses in sync, so a static transfer switch (STS) can move a load between buses without a break. BSC systems run in dual-bus mode or in multi-bus mode (up to three buses).

- **Dual-bus system.** Two independent UPS systems, each a single UPS or a parallel system. Dual-corded loads take one cord from each bus; single-corded loads go through an STS, which switches buses if one fails. This greatly improves reliability.
- **Multi-bus system.** Several independent UPS systems. Suited to dual-corded loads; single-corded loads go through an STS. More reliable than a single bus, less than a dual bus.

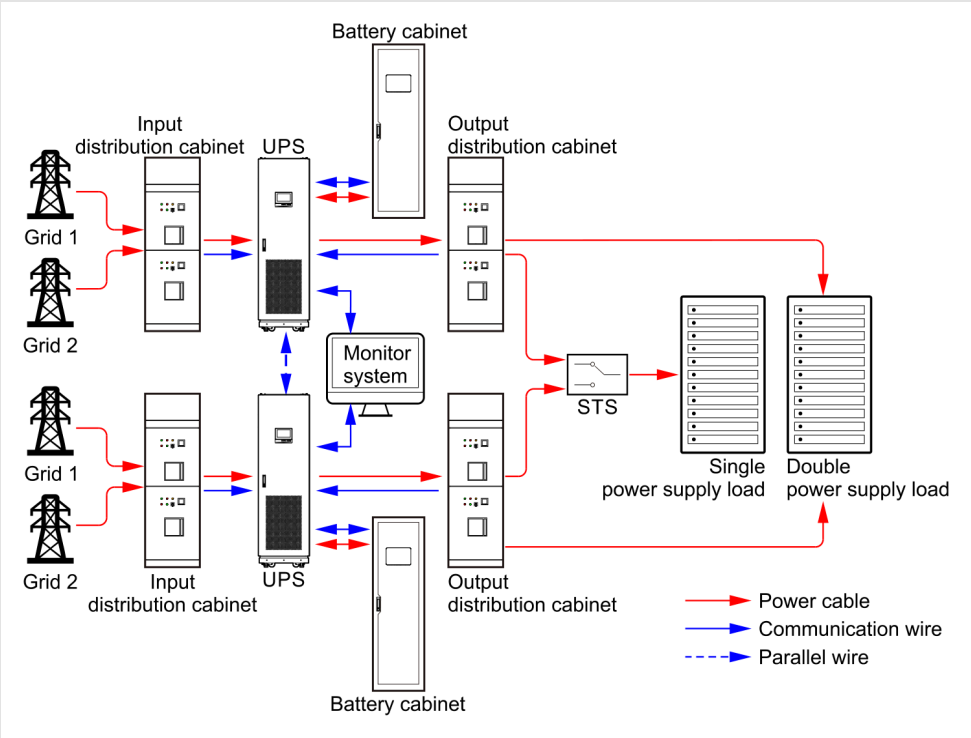

FIGURE 2-3 Dual-bus (BSC) system with STS for single-corded loads

i NOTE Both single and parallel systems can be part of a multi-bus system.

2.1.2 Features

- **Hot-swappable modules.** The power modules run in master-slave parallel control; each module is independent and needs no matching. Modules can be replaced while the system runs, which lowers maintenance cost and raises availability.
- **Three-level inverter** for a cleaner output waveform and higher efficiency.
- **Fully digital DSP control** of the inverter, phase synchronization, current sharing and logic: precise, fast and stable.
- **Input power-factor correction (PFC)** with an input power factor above 0.99: less load on the utility and on the distribution.
- **Intelligent fan speed control:** the fans follow the load, which lengthens fan life and lowers noise.
- **Intelligent ECO mode:** with a good utility the load runs on the bypass at up to 99 % efficiency. In WECO mode the inverter also compensates harmonics on the input current. If the bypass leaves the set window, the UPS transfers to the inverter.
- **Electromagnetic compatibility:** tested for conducted and radiated emission and immunity, dips, bursts, electrostatic discharge and surges.
- **7-inch touchscreen** with live readings of the system and of every module, and up to 10,000 event and alarm records.

2.2 The cabinet



1	Touchscreen and operation panel (Section 2.3)
2	Front door handle and lock (key)
3	Air inlet grille: cooling air in at the front
4	Top: air out (top exhaust) and cable entry plates
5	Side panel
6	Casters and leveling feet

FIGURE 2-4 INFINITE cabinet, front door closed

The cabinet is 23.6 in wide, 39.4 in deep and 81.4 in high (600 × 1,000 × 2,068 mm) with eye bolts and casters (Table A-1). Cooling air enters at the front and leaves at the top. All cables enter from the top.

2.3 Operation panel



1. Touchscreen, 7-inch color
2. AC/DC (rectifier) indicator
3. DC/AC (inverter) indicator
4. Bypass indicator
5. Battery indicator
6. Load indicator
7. ON key pair
8. OFF key pair
9. Status light bar (V-shaped)

FIGURE 2-5 Operation panel on the front door

TABLE 2-3 Operation panel

No.	Name	What it does
1	Touchscreen	Shows the readings (voltage, current, load ...) and the state of the UPS. All settings (Chapter 6).
2	AC/DC indicator	Green: the rectifier works normally. Red: the rectifier is abnormal.
3	DC/AC indicator	Green: the inverter works normally. Red: the inverter is abnormal.
4	Bypass indicator	Green: the bypass feeds the output normally. Red: the bypass is abnormal.
5	Battery indicator	Green: the battery feeds the output. Red: battery low voltage.
6	Load indicator	Green: output normal. Red: output overload.
7	ON key pair	Hold both ON keys together for 3 s to start the inverter.
8	OFF key pair	Hold both OFF keys together for 3 s to stop the inverter.

No.	Name	What it does
9	Status light bar	Blue: the UPS works normally. Flashing blue: on battery. Yellow: abnormal, but the UPS still works. Red: abnormal, the UPS does not work.

✓ **TIP** Both keys of a pair and 3 s are needed, so a bump cannot start or stop the inverter.

2.3.1 Labels on the UPS

TABLE 2-4 Symbols on the UPS

Symbol	Meaning
Crossed-out foot	Do not step on the equipment
Triangle with “high leakage current”	High leakage current: connect the ground before the supply
Triangle with lightning bolt	Electric shock hazard
Book symbol	Read the user manual before use

All safety symbols, warning labels and the rating plate must stay clearly visible. Do not remove or cover them.

2.4 Inside the front door

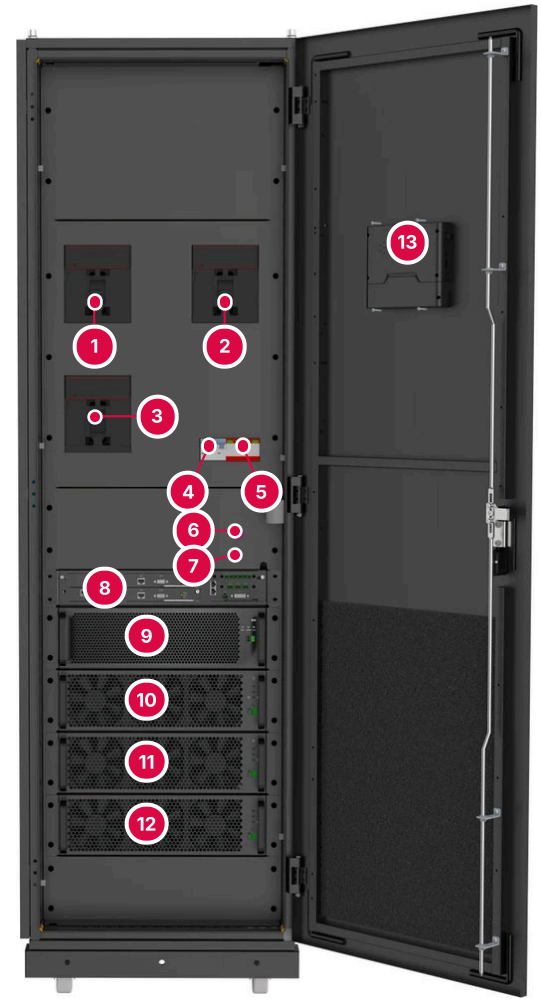

1. Bypass switch
2. Output switch
3. Input (utility) switch
4. SPD circuit breaker (option)
5. Surge protective device, SPD (option)
6. EPO key switch (EPO1)
7. Battery cold-start button
8. System control box (Section 2.7)
9. Bypass module (Section 2.6)
10. Power module 1 (standard)
11. Power module 2 (standard)
12. Redundant power module slot (N+1)
13. Back of the touchscreen, on the inside of the door

FIGURE 2-6 Front door open — 135, 160 and 200 kVA cabinet

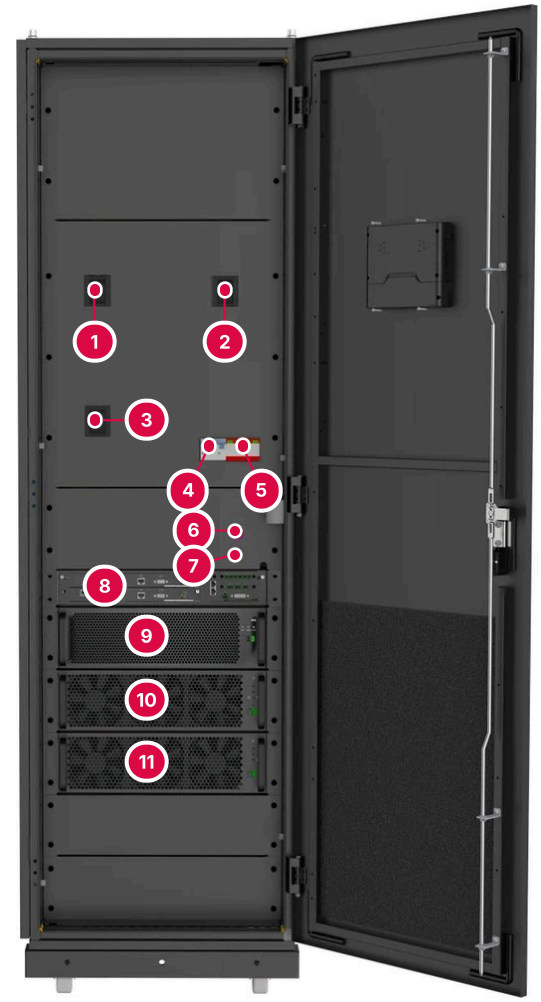

1. Bypass switch
2. Output switch
3. Input (utility) switch
4. SPD circuit breaker (option)
5. SPD (option)
6. EPO key switch (EPO1)
7. Battery cold-start button
8. System control box
9. Bypass module
10. Power module (standard)
11. Redundant power module slot (N+1)

FIGURE 2-7 Front door open — 80 and 100 kVA cabinet (smaller switches, one standard module)

i NOTE

- The 80 and 100 kVA cabinets have one power module as standard, with room for one more for redundancy. The 135, 160 and 200 kVA cabinets have two as standard, with room for one more.
- The bypass, output and input switches of the 80 and 100 kVA cabinets are smaller than those of the 135–200 kVA cabinets. Unless stated otherwise, the pictures show the 200 kVA cabinet.
- The battery switch and the maintenance bypass switch are **not** in the cabinet: they are external, supplied with the installation (Section 2.9).

2.4.1 How the cabinet is built

Figure 2-8 shows the 200 kVA N+1 cabinet with the door open, both inner cover plates removed and the modules drawn out. From the top down: the terminal compartment under the roof cable entry, the switch compartment, the EPO panel, the system control box and the module slots. The modules slide out to the front; air enters through the door grille, crosses the modules front to back and leaves at the top (Section 4.3.4).

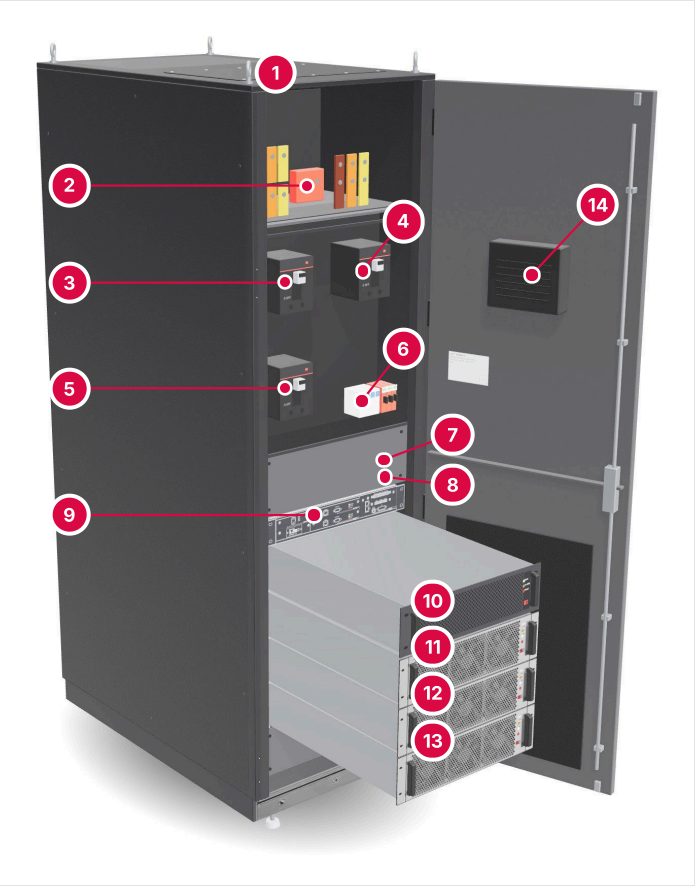

1. Roof cable entry plate: all cables enter from the top
2. Terminal compartment: utility, bypass, battery and output bus bars (Section 4.7.5)
3. Bypass switch
4. Output switch
5. Input (utility) switch
6. Surge protective device and its breaker (option)
7. EPO key switch
8. Battery cold-start button
9. System control box (Section 2.7)
10. Bypass module
11. Power module 1
12. Power module 2
13. Redundant power module (N+1 slot)
14. Back of the touchscreen, on the door

FIGURE 2-8 Illustration — internal layout simplified: 200 kVA N+1 cabinet, door open, cover plates removed, modules drawn out

2.5 Power module

The power module contains a rectifier, an inverter and a DC/DC converter. The rectifier and the DC/DC converter turn the utility input and the battery input into a stable DC bus; the inverter turns the DC bus into a sine-wave output. Each module is rated 100 kW.

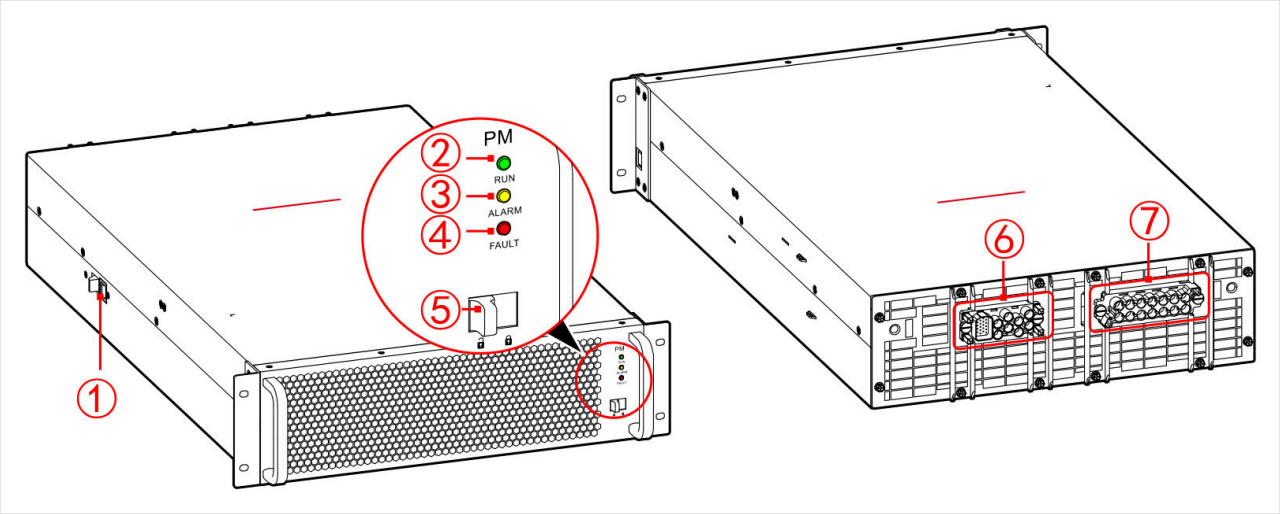

1. **Positioning lock** (left side). Press it to pull the module out once the red line on the module side appears.
2. **RUN** indicator, green. On: inverter state. Fast flashing: step-up (soft start). Slow flashing: ready. Off: not in inverter state.
3. **ALARM** indicator, yellow. On: the module has an alarm.
4. **FAULT** indicator, red. On: the module is faulty.
5. **Ready switch.** Green (unlocked): the module is not locked in the cabinet and can be removed. Red (locked): the module is locked and cannot be removed.
6. **Power connector** (rear), rectangular: module power input.
7. **Power and signal connector** (rear), rectangular: module power output and signal connection.

FIGURE 2-9 Power module — front (left) and rear connectors (right)

i NOTE Set the ready switch to **locked** (red) before you start the UPS, and to **unlocked** (green) only to remove the module (Section 7.2).

2.6 Bypass module

The bypass module holds the static switch and a filter. When the power modules report overload or over-temperature, or the system is abnormal, the static switch transfers the load to the bypass supply. In ECO and WECO mode, with the bypass voltage within the set window, the bypass feeds the load. One bypass module per cabinet, 100 kVA (80 and 100 kVA cabinets) or 200 kVA (135–200 kVA cabinets).

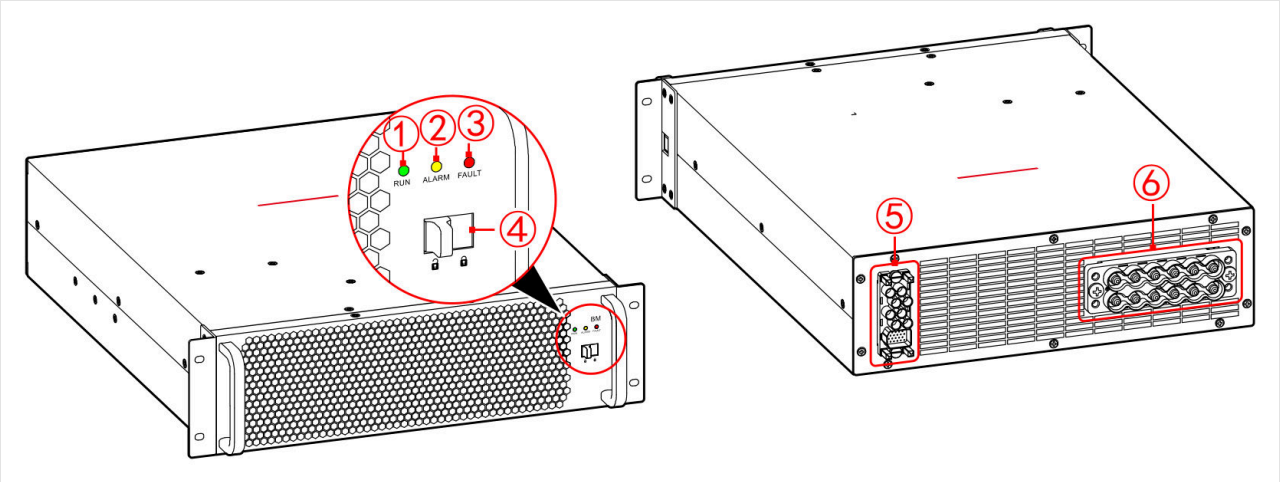

1. **RUN** indicator, green. On: normal output. Flashing: standby. Off: off-line or faulty.
2. **ALARM** indicator, yellow. Reserved.
3. **FAULT** indicator, red. On: the bypass module is faulty.
4. **Ready switch.** Green: unlocked, the module can be removed. Red: locked in the cabinet.
5. **Signal connector** (rear), rectangular.
6. **Power connector** (rear), rectangular.

FIGURE 2-10 Bypass module — front (left) and rear connectors (right)

2.7 System control box

The system control box is the row of cards just above the bypass module. It holds the expansion card (option), the SNMP-L network card (option), system control cards 1 and 2 and the system monitoring card. All cards are hot-swappable.

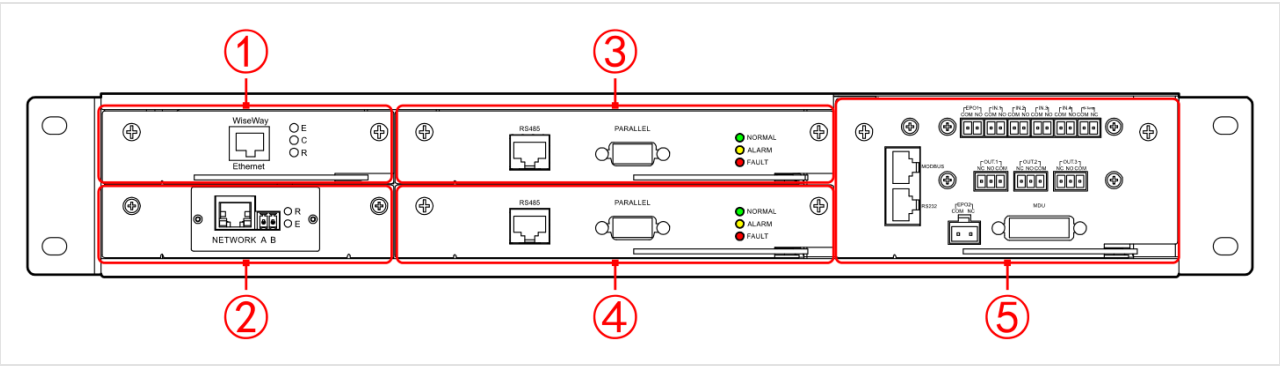

1. Expansion card slot (option): BMS card or dry contact expansion card (Section 2.10.1)
2. SNMP-L network card slot (option, Chapter 8)
3. System control card 1
4. System control card 2
5. System monitoring card (Section 2.7.2)

FIGURE 2-11 System control box, front view

2.7.1 System control cards

The system control card runs the operating logic and the fault monitoring of the whole system. Over CAN buses inside the cabinet and between cabinets, it synchronizes all modules and shares the current among them, so that all power modules give the same output and carry an even part of the load. It reports the state and the faults of the cabinet to the monitoring system. Cards 1 and 2 are identical and back each other up: one is the primary (master), the other the secondary (backup).

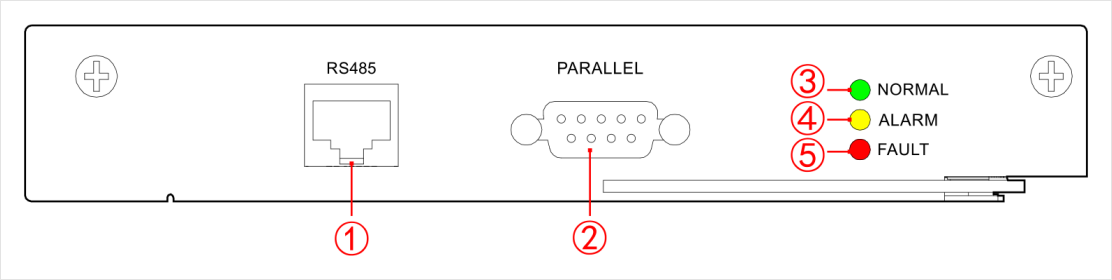

1. **RS485** port, RJ45: links the touchscreens of parallel cabinets (smart integrated display)
2. **PARALLEL** port: parallel / BSC signal between cabinets (Section 2.10.2)
3. **NORMAL**, green. On: primary card. Flashing: initializing. Off: faulty.
4. **ALARM**, yellow. On: alarm. Flashing: secondary (backup) card. Off: no alarm.
5. **FAULT**, red. On: card faulty. Off: card working.

FIGURE 2-12 System control card

RS485 port and the smart integrated display. The RS485 ports of parallel cabinets can be linked so that one touchscreen (the host) shows the basic information of the other UPS. You do not need this link if you do not use the integrated display. To use it:

1. Link the RS485 ports with RJ45 network cables: two UPS as in Figure 2-14, more UPS in a ring as in Figure 2-15. Pins: Figure 2-13.
2. On each touchscreen open **Setting manage › Comm. setting › RTU › Next** and set **Smart integrated display function** to On (Table 6-21).
3. Set one UPS as host and the others as slaves, each with its address (1 to 8, matching its UPS ID), the same baud rate and the number of cabinets.

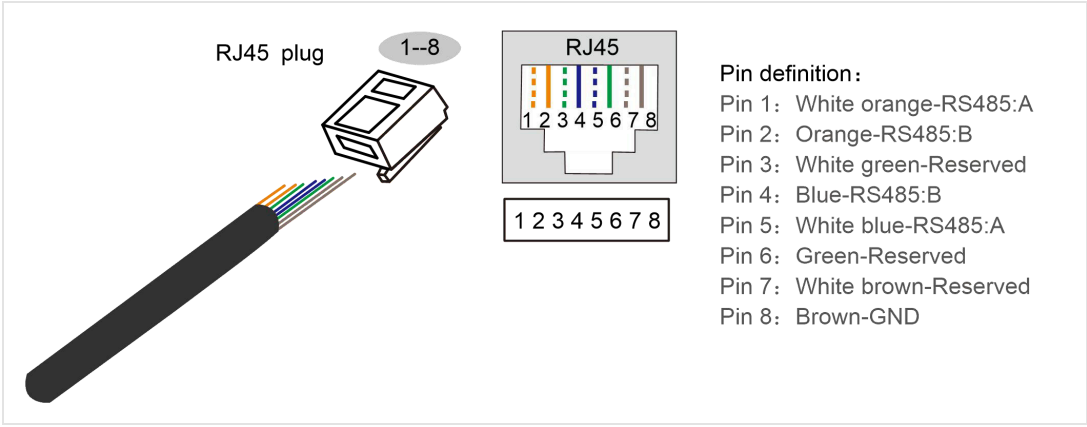

FIGURE 2-13 RS485 port, RJ45: pin 1 white-orange RS485-A, pin 2 orange RS485-B, pin 3 white-green reserved, pin 4 blue RS485-B, pin 5 white-blue RS485-A, pin 6 green reserved, pin 7 white-brown reserved, pin 8 brown GND

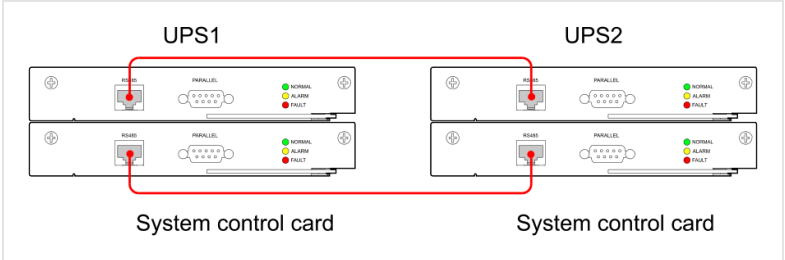

FIGURE 2-14 RS485 link between two UPS

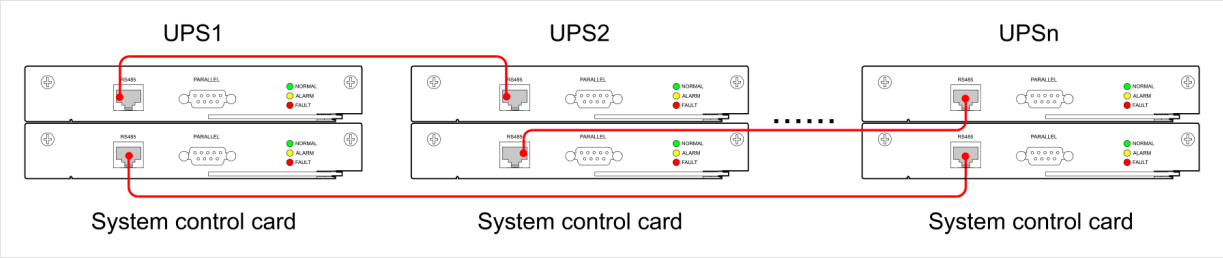

FIGURE 2-15 RS485 link between several UPS (ring)

2.7.2 System monitoring card

The system monitoring card is the communication interface of the system: external ports, dry contacts, battery temperature input and EPO. Its panel has one MODBUS port, one RS232 port, the EPO1 input, four input dry contacts (IN.1 to IN.4), the battery temperature input (B-Temp), the EPO2 input, three output dry contacts (OUT.1 to OUT.3) and the HMI (touchscreen) port.

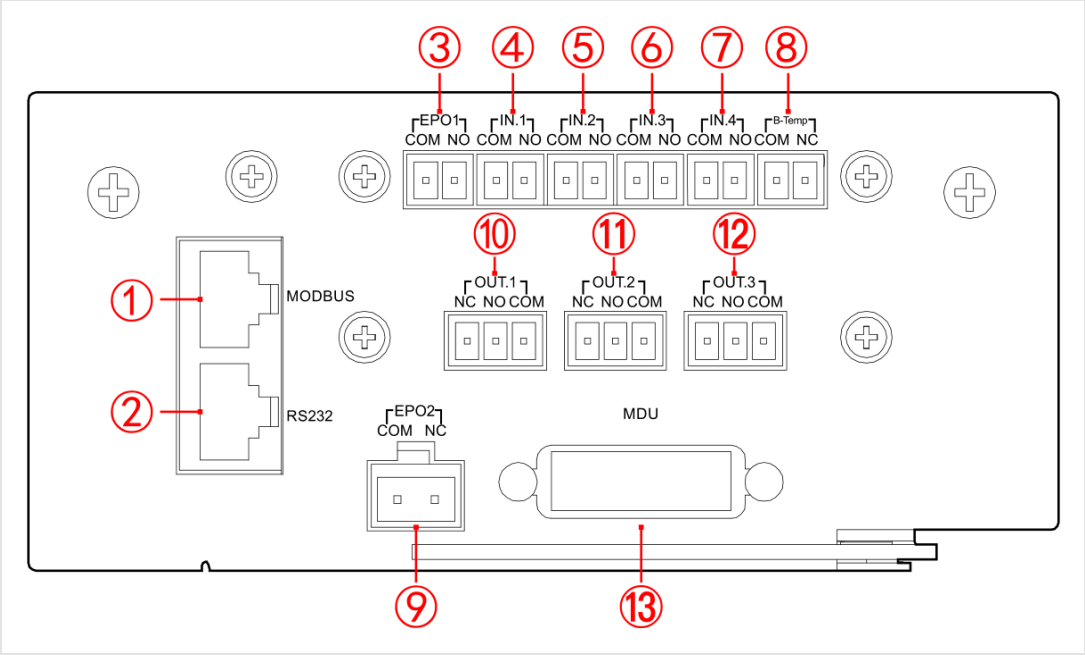

1. MODBUS port, RJ45
2. RS232 port, RJ45
3. EPO1 (NO, COM) — internal EPO key switch
4. IN.1 (NO, COM)
5. IN.2 (NO, COM)
6. IN.3 (NO, COM)
7. IN.4 (NO, COM)
8. B-Temp (NC, COM) — battery temperature sensor
9. EPO2 (COM, NC) — remote EPO
10. OUT.1 (NC, NO, COM) — battery trip
11. OUT.2 (NC, NO, COM) — bypass backfeed trip
12. OUT.3 (NC, NO, COM) — settable
13. MDU — HMI port to the touchscreen

FIGURE 2-16 System monitoring card — ports and terminals

TABLE 2-5 System monitoring card ports

No.	Mark	Pins	Name	Description
1	MODBUS	RJ45	MODBUS port	Modbus RTU serial link to a building management system or other upper computer. Pins: Table 4-9.
2	RS232	RJ45	RS232 port	RS232 serial link (external SNMP card). Pins: Table 4-9.

No.	Mark	Pins	Name	Description
3	EPO1	NO, COM	Internal EPO input, normally open	Wired at the factory to the EPO key switch of the cabinet. Preset, not settable. COM = reinforced-insulation ground.
4–7	IN.1 – IN.4	NO, COM	Input dry contacts, normally open	Signal active when NO and COM are shorted. Each can be set to one of the definitions of Table 2-6 (AEC service sets them).
8	B-Temp	NC, COM	Battery temperature input	Battery temperature sensor wire (Section 2.10.3). Preset, not settable.
9	EPO2	NC, COM	Remote EPO input, normally closed	Remote EPO: fit the 2-pin jumper on CN8 of the card (Figure 2-17). NC–COM closed: normal operation (open, the touchscreen shows “EPO abnormal”). NC–COM open: EPO active. Preset, not settable.
10	OUT.1	NC, NO, COM	Output dry contact 1	Set as the **battery trip** contact, used on NC. Use with a battery breaker fitted with a shunt trip: when the battery trip signal is active, the breaker trips.
11	OUT.2	NC, NO, COM	Output dry contact 2	Set as the **bypass backfeed (reverse current)** contact, used on NC. Use with a bypass breaker fitted with a shunt trip: when the signal is active, the breaker trips.
12	OUT.3	NC, NO, COM	Output dry contact 3	Rating 30 V DC, 2 A max (external supply). When active, COM–NO close and COM–NC open. Can be set to any of the 18 definitions of Table 2-7.
13	MDU	—	HMI port	Link to the touchscreen.

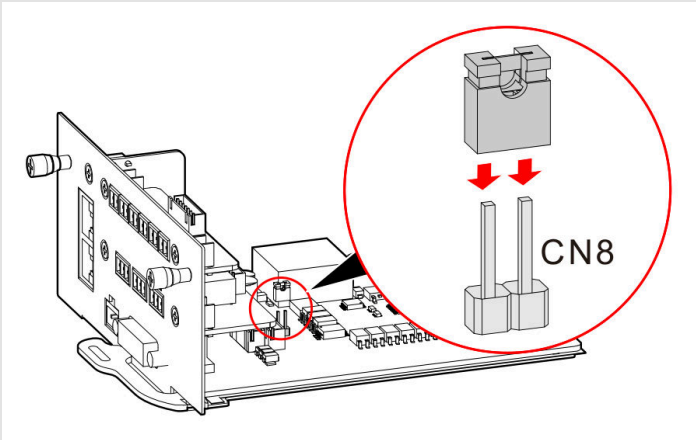

FIGURE 2-17 System monitoring card — fit the 2-pin jumper on CN8 to use EPO2 (remote EPO)

⚠ *WARNING*

Wire the EPO2 loop as a closed (NC) circuit through the remote EPO button, with the jumper on CN8. A broken wire then stops the UPS output, as an EPO would. Test the remote EPO at commissioning.

TABLE 2-6 Input dry contact definitions (IN.1 to IN.4, IN.5 to IN.7)

No.	Definition	When the signal is received
1	Battery abnormal	The UPS alarms, records the event and stops charging.
2	Battery grounding abnormal	The UPS alarms and records the event; charging and discharging go on.
3	Battery switch open	The UPS alarms and records the event: the auxiliary contact of the battery breaker reports that it is open.

No.	Definition	When the signal is received
4	Bypass switch open	The UPS alarms and records the event: the auxiliary contact of the bypass breaker reports that it is open.
5	Generator mode	The UPS records the event and goes to generator mode: the charging power is derated to suit the generator. Whether to charge, and the derating, are set for the generator's rating (Table 6-16).
6	SPD abnormal	An input surge protective device reports a fault: the UPS records the event.
7	Maintenance bypass enabled	The UPS alarms, reports the maintenance bypass closed and stops the inverter. The load is fed by the external maintenance bypass.
8	Utility switch open	The UPS alarms and records the event: the auxiliary contact of the utility breaker reports that it is open.
9	Environmental smoke abnormal	The smoke detector reports smoke: the UPS records the event. With smoke shutdown enabled, the UPS shuts down after the set delay.
10	Light band switch open	No longer used.
11	Output switch open	The UPS alarms and records the event: the auxiliary contact of the output breaker reports that it is open.
12	Battery charging disabled	Charging stops.
13	Battery discharge disabled	Discharging stops.

TABLE 2-7 Output dry contact definitions (OUT.1 to OUT.6)

No.	Definition	The contact is ON when
1	Inverter mode	the UPS is in inverter output mode.
2	Bypass power supply	the UPS is in bypass output mode.
3	Battery trip	the battery side is abnormal and the battery breaker must open: the contact drives the trip device of the battery breaker.
4	Battery power supply	the UPS is on battery.
5	Battery under-voltage alarm	the battery has discharged to the low-voltage alarm point.
6	Battery under-voltage protection	the battery has discharged to the low-voltage protection point.
7	Output overload	the UPS is overloaded.
8	UPS abnormal	the UPS is in an abnormal state.
9	Bypass abnormal	the bypass is abnormal or cannot be tracked.
10	Utility abnormal	the utility input is abnormal.
11	Generator start	the generator is started.
12	ECO mode	the UPS is in ECO output mode.
13	Inverter abnormal	the inverter is abnormal.
14	SCR short-circuit	the UPS detects a shorted bypass SCR; the cabinet opens the bypass switch.
15	Parallel bypass backfeed	Included in “SCR short-circuit”; this setting has no effect.
16	UPS power-on	the UPS is powered on.

No.	Definition	The contact is ON when
17	Fan abnormal	a fan is abnormal.
18	UPS alarm	any cabinet pre-alarm, cabinet alarm, component failure alarm, communication alarm or smart-mode alarm is present.

i NOTE The output dry contacts give a switched signal that you can assign as needed. The definitions are set by AEC service (Section 6.5.7).

2.8 Working principle and operating modes

INFINITE is an online UPS built from modules with smart control. Each power module is a rectifier, an inverter and a DC/DC converter that turn the input into a clean, high-quality sine wave by high-frequency switching.

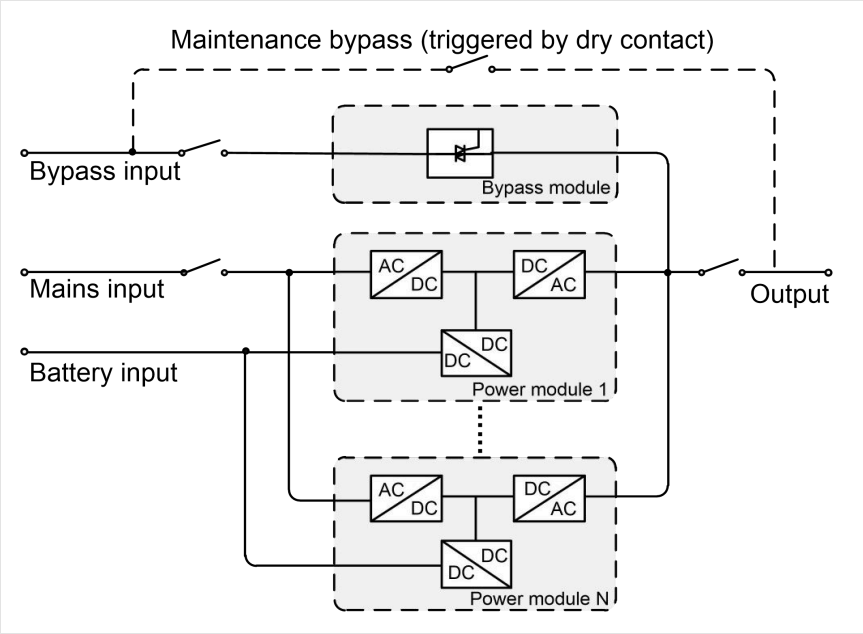

FIGURE 2-18 Working principle — bypass module, power modules 1 to N, utility, bypass and battery inputs

Normal (utility) mode. The rectifier turns the utility AC into DC, and the inverter turns the DC back into AC for the load. The double conversion keeps input harmonics, spikes and transients away from the load. The DC bus charges the battery through the DC/DC converter.

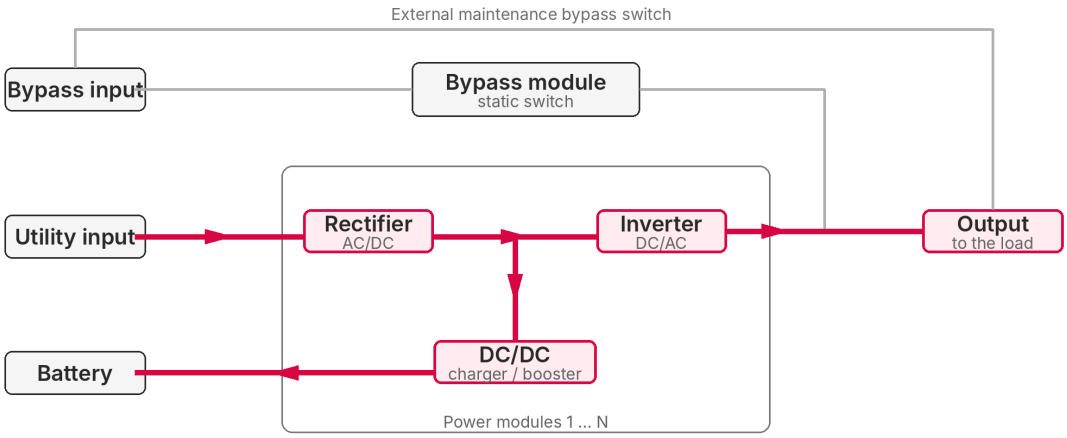

FIGURE 2-19 Normal mode: utility → rectifier → inverter → output; the battery is charged

Battery mode. When the utility voltage or frequency at the rectifier goes out of range, the UPS goes to battery mode. The DC/DC converter boosts the battery voltage and the inverter feeds the load, with no break in the output. If the utility returns before the battery is exhausted, the rectifier takes over again and recharges the battery. If the utility does not return and the battery is nearly exhausted, the UPS gives an audible and visual alarm, stops the inverter at the end-of-discharge point and beeps continuously: the load then loses power.

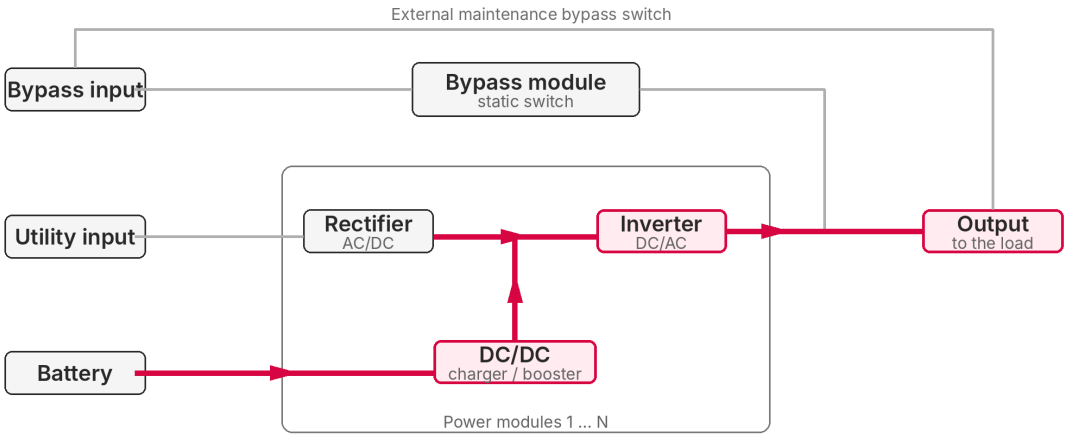

FIGURE 2-20 Battery mode: battery → DC/DC converter → inverter → output

Bypass mode. If the inverter meets a condition outside its range — over-temperature, short circuit, abnormal output voltage, overload — it stops to protect itself. With a normal bypass input, the bypass module transfers the load to the bypass supply. The rectifier keeps running and charging the battery. When the fault or overload clears, the UPS returns to the inverter. In bypass mode the load is not protected from utility outages and disturbances.

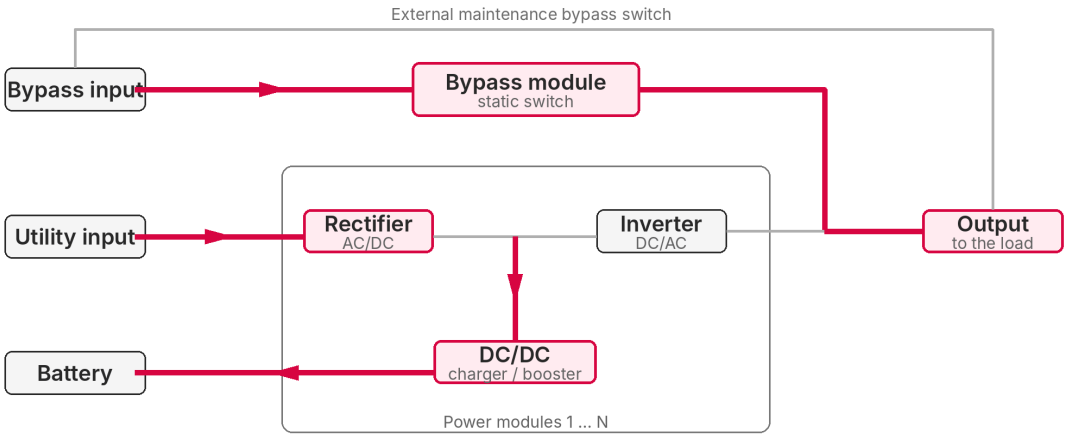

FIGURE 2-21 Bypass mode: bypass input → static switch → output

ECO mode. With the bypass voltage and frequency within the ECO window, the static switch feeds the load from the bypass and the inverter stays ready. If the bypass leaves the ECO window, the load transfers to the inverter. The rectifier keeps charging the battery in both cases. ECO mode is set on the touchscreen (Section 6.5.5) and saves energy.

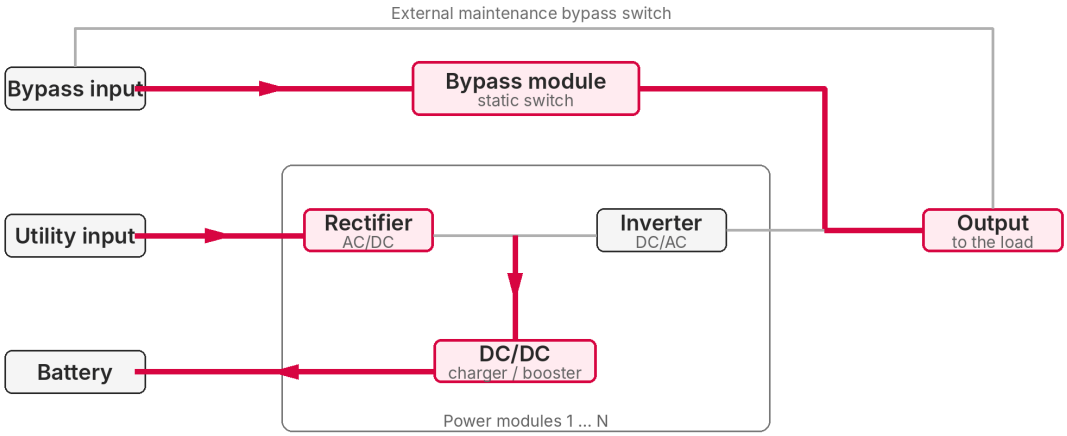

FIGURE 2-22 ECO mode: the load is on the bypass, the inverter is ready

WECO mode. As ECO mode, but the inverter also runs grid-tied: the power modules compensate the harmonics of the bypass current, which raises its power factor and lowers the input current distortion (THDi). Outside the WECO window the load transfers to the inverter. WECO is set on the touchscreen.

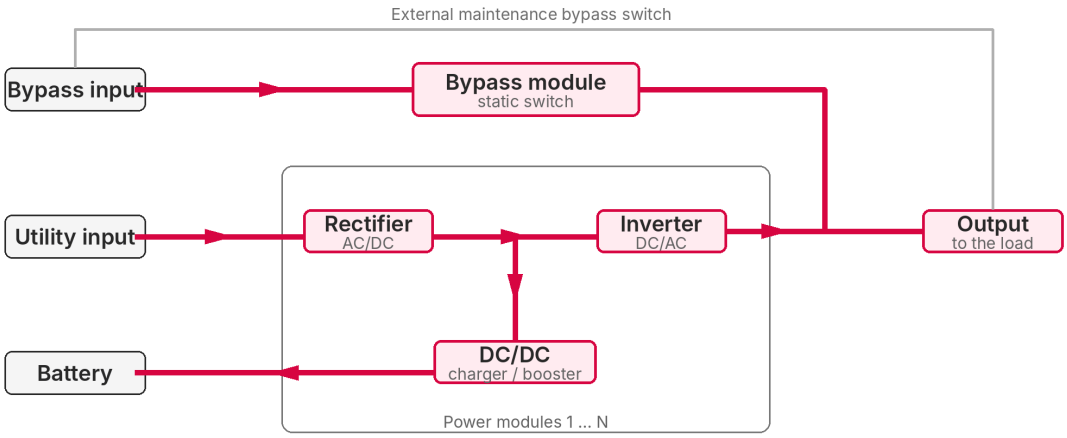

FIGURE 2-23 WECO mode: bypass feeds the load, the modules compensate harmonics

Maintenance bypass mode. To service the UPS without cutting the load, with a normal bypass input, close the **external** maintenance bypass switch, then open the utility, bypass and output switches (Section 7.1). The UPS is then fully de-energized and the load is fed straight from the bypass source. An auxiliary contact of the maintenance bypass switch, wired to an input dry contact or to the detection wire (Section 4.7.9), tells the UPS that the maintenance bypass is closed.

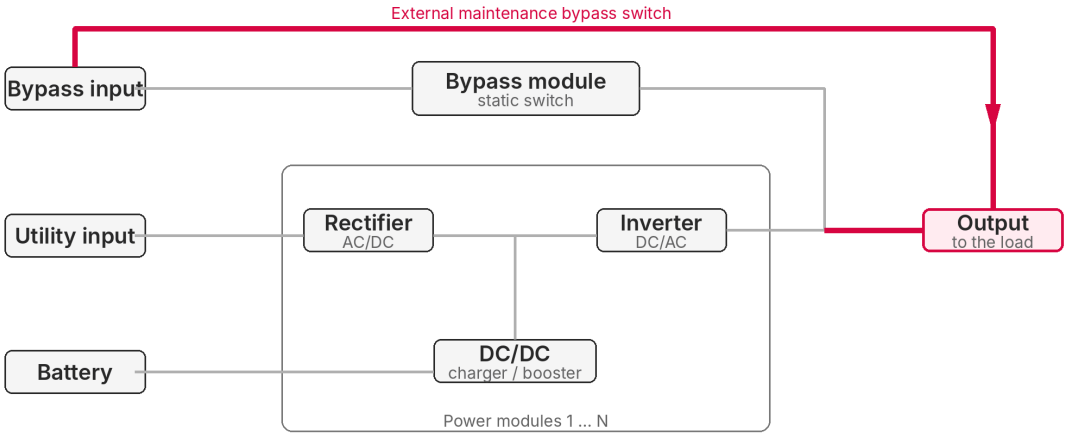

FIGURE 2-24 Maintenance bypass mode: the external maintenance bypass switch feeds the load

2.9 Switches and breakers

Five switches control the power paths. Three are in the cabinet; two are part of the installation. Every procedure of Chapter 5 and Chapter 7 shows their positions with the diagram below.

TABLE 2-8 The switches

Switch	Where	What it does
Input (utility) switch	Cabinet, Figure 2-6 item 3	Feeds the rectifiers of the power modules from the utility input terminals.
Bypass switch	Cabinet, item 1	Feeds the static switch in the bypass module from the bypass input terminals.
Output switch	Cabinet, item 2	Connects the UPS output to the output terminals and the load.
External battery switch	Battery cabinet or DC panel (site supplied)	Connects the battery string. 3-pole DC disconnect, rated per Table 4-5.

Switch	Where	What it does
External maintenance bypass switch	Maintenance bypass panel (site supplied)	Connects the bypass source straight to the load, around the UPS. Normally OFF.

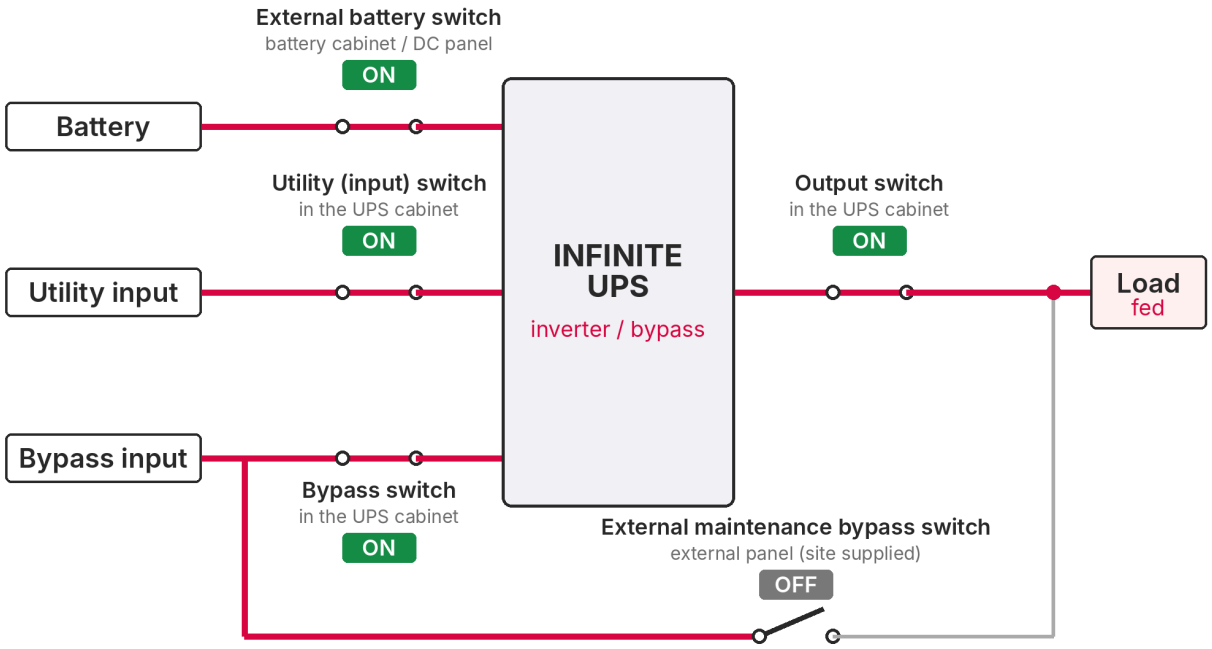

FIGURE 2-25 Switch positions in normal operation: input, bypass, output and battery switches ON, maintenance bypass OFF

2.10 Options

TABLE 2-9 Options

Option	Use
SNMP-L network card	Network monitoring: web page, SNMP, e-mail alarms (Chapter 8). Fits slot 2 of the system control box.
Dry contact expansion card	3 more input and 2 more output dry contacts (IN.5–IN.7, OUT.4–OUT.5).
BMS expansion card	Communication with the BMS of AEC L6 lithium battery cabinets; 2 inputs, 1 output.
Parallel / BSC kit	Parallel cables, 33 ft (10 m) or 49 ft (15 m), for parallel and BSC systems. A 23 ft (7 m) parallel cable ships with each UPS.
Battery temperature compensation kit	Battery temperature sensor and 65.6 ft (20 m) extension wire, for temperature-compensated charging.
Surge protection kit	Class C surge protective device (SPD) with its circuit breaker, fitted at the factory.
Single power source kit	Links the utility and bypass input bus bars when one source feeds both.
Seismic kit	Seismic base and skirt panels; designed to the California OSHPD requirements.

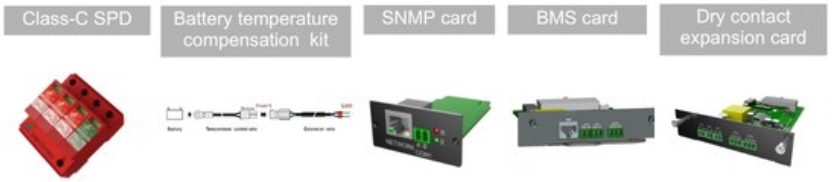

FIGURE 2-26 From left: Class C SPD, battery temperature compensation kit, SNMP card, BMS card, dry contact expansion card

2.10.1 Expansion cards

The expansion slot (slot 1 of the system control box) takes **one** card: the dry contact expansion card or the BMS expansion card. After fitting a card, AEC service sets **Expansion card mode** to match (Table 6-4). Installation: Section 4.6.3.

Dry contact expansion card. Three more input dry contacts and two more output dry contacts for signal acquisition and control.

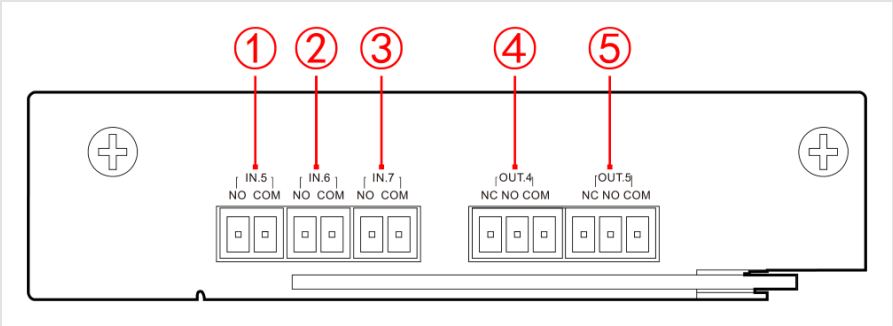

1. IN.5 (NO, COM)
2. IN.6 (NO, COM)
3. IN.7 (NO, COM)
4. OUT.4 (NC, COM, NO)
5. OUT.5 (NC, COM, NO)

FIGURE 2-27 Dry contact expansion card

TABLE 2-10 Dry contact expansion card

No.	Mark	Description
1–3	IN.5 – IN.7	Inputs, normally open. Active when NO and COM are shorted. Settable to the definitions of Table 2-6. COM = reinforced-insulation ground.
4–5	OUT.4 – OUT.5	Outputs. 30 V DC, 2 A max (external supply). When active, COM–NO close and COM–NC open. Settable to the definitions of Table 2-7.

BMS expansion card. Communication with the battery management system (BMS) of AEC L6 lithium battery cabinets, two input dry contacts and one output dry contact.

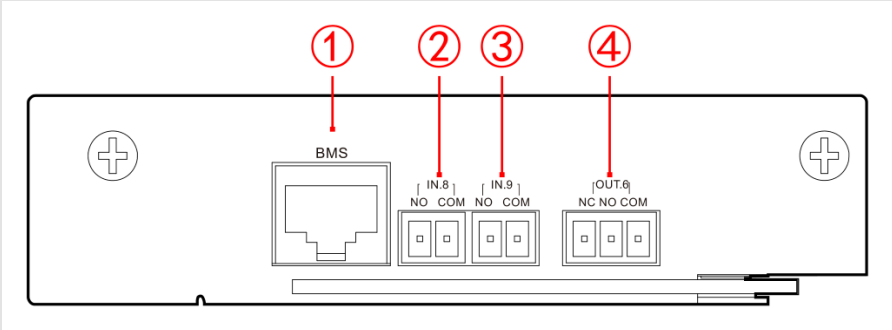

1. BMS port, RJ45 (pins: Figure 2-29)
2. IN.8 (NO, COM): can be set to prohibit charging
3. IN.9 (NO, COM): can be set to prohibit discharging
4. OUT.6 (NC, NO, COM): reserved; 30 V DC, 2 A max

FIGURE 2-28 BMS expansion card

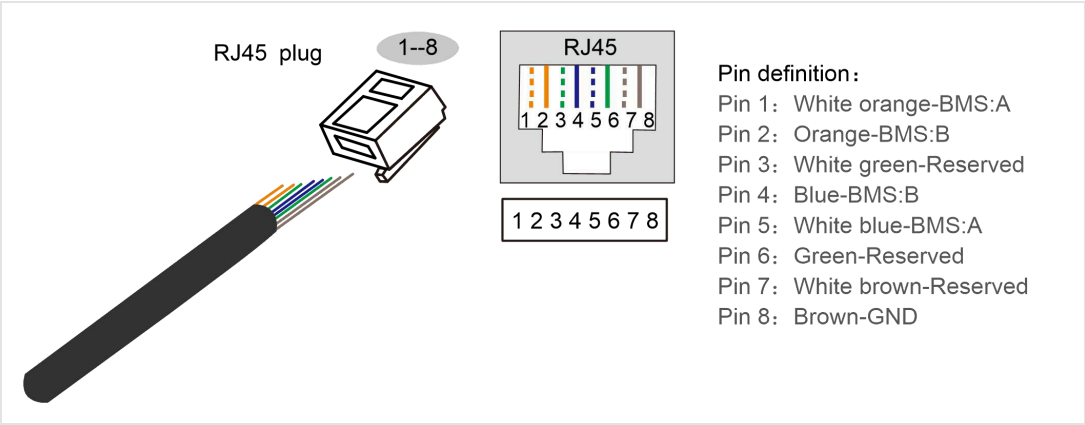

FIGURE 2-29 BMS port, RJ45: pin 1 white-orange BMS-A, pin 2 orange BMS-B, pin 3 white-green reserved, pin 4 blue BMS-B, pin 5 white-blue BMS-A, pin 6 green reserved, pin 7 white-brown reserved, pin 8 brown GND

i NOTE With lithium batteries, use AEC L6 cabinets and call AEC before commissioning: the battery settings, the BMS link and the cables are set up by AEC (Section 6.5.2).

2.10.2 Parallel / BSC kit

The parallel / BSC kit links the PARALLEL ports of the system control cards of the cabinets (Figure 2-12, item 2). Installation: Section 4.6.4.

- In a parallel system, connect the PARALLEL ports of all UPS in a ring: N UPS need N parallel cables, so that each UPS has two cables. If one cable fails, the system keeps running.
- In a dual-bus (BSC) system, the BSC link synchronizes the output frequency and phase of the two systems so that the loads can be switched between buses.



FIGURE 2-30 Parallel / BSC cable

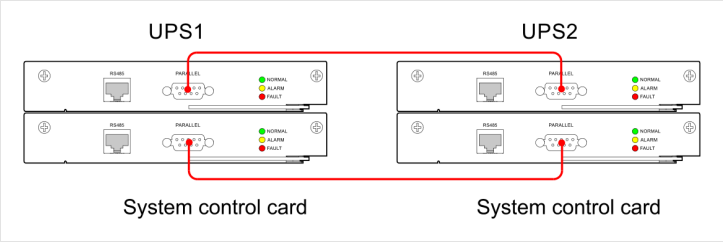

FIGURE 2-31 Parallel cables between two UPS — both system control cards of each UPS are linked

i NOTE A 23 ft (7 m) parallel cable ships with each UPS. If it is too short for your site, order a 33 ft (10 m) or 49 ft (15 m) cable from AEC.

2.10.3 Battery temperature compensation kit

The kit measures the battery temperature so that the UPS can compensate the charge voltage. It connects to the B-Temp input of the system monitoring card. Installation: Section 4.6.5.

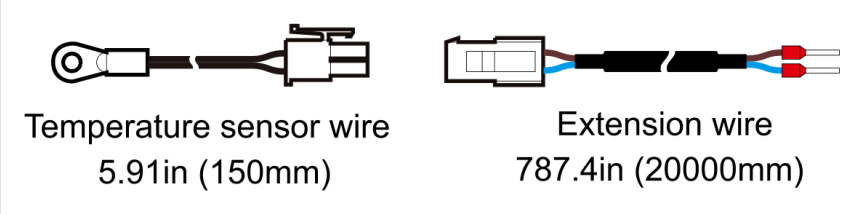

FIGURE 2-32 Battery temperature compensation kit: temperature sensor wire, 5.9 in (150 mm), and extension wire, 65.6 ft (20 m)

i NOTE Fix the temperature sensor where the battery is warmest.

2.10.4 Surge protection kit

In areas with frequent lightning, install a multi-level surge protection system at the service entrance. The INFINITE can be fitted with a Class C surge protective device (SPD) and its circuit breaker (Figure 2-6, items 4 and 5). Installation: Section 4.6.6.

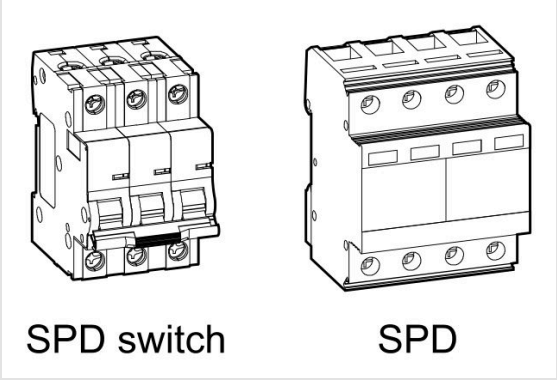

FIGURE 2-33 SPD circuit breaker (left) and SPD (right)

i NOTE Order the SPD with the UPS: AEC fits it at the factory. Fitting it on site needs the UPS completely powered off.

2.10.5 Single power source kit

The UPS leaves the factory for dual input: separate utility and bypass sources. When one source feeds both, the single power source kit links the utility input bus bars to the bypass input bus bars. Installation: Section 4.6.7.

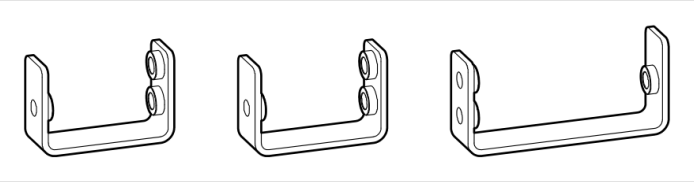

FIGURE 2-34 Single power source kit (three links)

2.10.6 Seismic kit

For sites in seismic zones. The kit is designed to the California OSHPD requirements. Installation: Section 4.6.1.

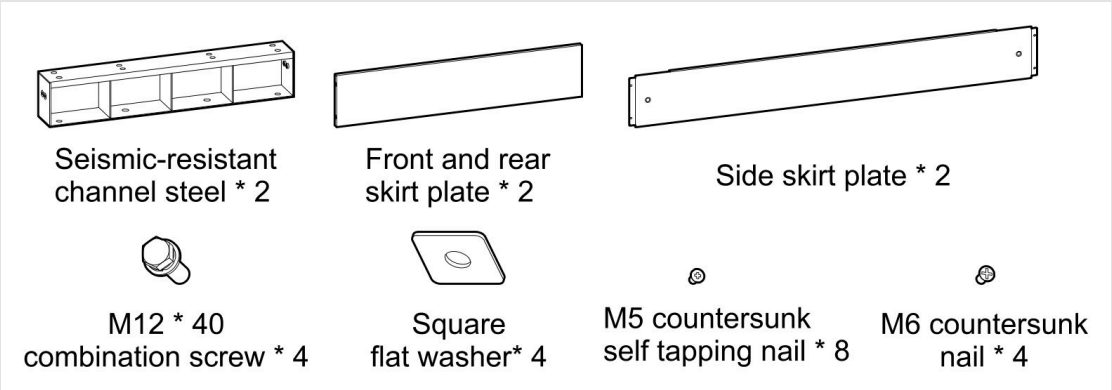

FIGURE 2-35 Seismic kit: 2 seismic channel steels, 2 front/rear and 2 side skirt plates, 4 M12 × 40 screws with 4 square washers, 8 M5 self-tapping screws, 4 M6 countersunk screws

2.11 Alarms and protections

When the UPS detects an abnormal condition it raises an audible and visual alarm. The tables below give, for each fault, what the UPS allows and how it alarms: buzzer pattern, the operation panel indicator, the touchscreen icon and the ambient (status) light bar.

TABLE 2-11 Utility, battery and bypass faults

Fault	Protection	Alarm
Utility fault: utility overvoltage, under-voltage, unbalance, over-frequency, under-frequency, power down, phase loss, phase sequence abnormal, large harmonic component, utility voltage dip (shown as “Utility flash drop”), PFC overload protection, large DC component	Utility supply not allowed	Buzzer beeps slowly · AC/DC indicator red · utility icon red · yellow light bar
Battery fault: battery reverse connection, battery overvoltage, charger overcurrent, battery circuit abnormal, battery under-voltage protection, battery overload	Battery supply not allowed	Buzzer beeps rapidly · battery indicator red · battery icon red · yellow light bar

Fault	Protection	Alarm
Bypass fault: bypass overvoltage, under-voltage, unbalance, over-frequency, under-frequency, power down, phase loss, phase sequence abnormal, large harmonic components	Bypass output not allowed	Buzzer beeps slowly · bypass indicator red · bypass icon red · yellow light bar
ECO power-down fast detection, ECO overvoltage, ECO under-voltage, ECO over-frequency, ECO under-frequency	ECO output not allowed	Buzzer beeps slowly · yellow light bar
WECO under-voltage	WECO output not allowed	Buzzer beeps slowly · yellow light bar

TABLE 2-12 Output and system faults

Fault	Protection	Alarm
Output fault: inverter output fault, output short circuit, inverter overvoltage, inverter under-voltage, low output power factor, large output DC component	Inverter output not allowed	Buzzer continuous · DC/AC indicator red · output icon red · red light bar
Output circuit abnormal	None	Buzzer beeps slowly · DC/AC indicator red · output icon red · red light bar
System fault, system bypass fault, system inverter fault	None	Buzzer continuous · red light bar
System EPO on, EPO on	Bypass and inverter output not allowed	Buzzer continuous · red light bar
Bypass SCR abnormal	Bypass output not allowed	Buzzer continuous · bypass indicator red · bypass icon red · red light bar
Bypass overload protection	Bypass and inverter output not allowed	Buzzer continuous · load indicator red · output icon red · red light bar
Inverter overload protection	Inverter output not allowed	As above
Parallel cable abnormal	Inverter output not allowed	Buzzer continuous · red light bar
Parallel system master permissions fault	None	Buzzer continuous · red light bar
External maintenance bypass enabled	Inverter output not allowed	Buzzer continuous · red light bar
System battery charge disabled, system battery discharge disabled	None	Buzzer beeps rapidly · battery indicator red · battery icon red · red light bar

TABLE 2-13 Cabinet faults and pre-alarms

Fault	Protection	Alarm
Cabinet fault	None	Buzzer continuous · red light bar
Bypass over-temperature	Bypass output depends on the setting “Bypass output allowed when over-temperature” (Table 6-15)	Buzzer continuous · bypass indicator red · bypass icon red · red light bar

Fault	Protection	Alarm
Inverter output overcurrent, rectifier fault self-locking, inverter fault self-locking, battery overload protection, battery discharge protection, UPS fault	None	Buzzer continuous · red light bar
Cabinet pre-alarm: cabinet over-temperature alarm, battery high-temperature alarm, battery low-temperature alarm, battery under-voltage alarm, backup time insufficient	None	Buzzer beeps rapidly · yellow light bar
Output overload alarm	None	Buzzer beeps rapidly · load indicator red · output icon red · yellow light bar
Output frequency out of range, bypass auxiliary power abnormal, bypass over-temperature alarm, partial power module PFC abnormal, battery power-on auto-start disabled	None	Buzzer beeps rapidly · yellow light bar

TABLE 2-14 Cabinet alarms and power-on failures

Fault	Protection	Alarm
Cabinet alarm: cabinet fault, battery not connected alarm, auxiliary power abnormal	None	Buzzer beeps slowly · yellow light bar
Bypass installation not ready	Bypass output not allowed	Buzzer beeps slowly · bypass indicator red · bypass icon red · yellow light bar
Setting parameter mismatch, battery parameter mismatch, module quantity mismatch, cabinet count mismatch, system card n installation not ready, system card n flash abnormal, system card n slot address repeat, system card n on/off status not synchronized with master card, current mode is bypass output, system card n master/backup parameters out of sync, system card n output state out of sync, fan dedusting	None	Buzzer beeps slowly · yellow light bar
Power-on failure alarm: reserved, load too large to invert output, load unknown waiting for common inversion, PFC / INV / CCM software version inconsistent, module hardware version inconsistent, key parameter mismatch, parallel cabinet address conflict, module version inconsistent	Static start-up not allowed	Buzzer beeps slowly · yellow light bar

TABLE 2-15 Component, communication and smart-mode alarms

Fault	Protection	Alarm
Component failure alarm: bypass 1 / bypass 2 / cabinet / system card NTC failure, bypass fan abnormal, cabinet fan abnormal, parallel cable 1 alarm, parallel cable 2 alarm, bypass 1 / bypass 2 installation not ready, monitoring card installation not ready	None	Buzzer beeps slowly · yellow light bar
Bypass module offline	Bypass output not allowed	Buzzer beeps slowly · bypass indicator red · bypass icon red
Dry contact expansion card offline, bypass NTC failure	None	Buzzer beeps slowly · yellow light bar
Communication abnormal alarm: communication abnormal, inner sync CAN abnormal, inner current-sharing CAN abnormal, BMS communication fault, inner display CAN abnormal, inter-cabinet sync CAN abnormal, inter-cabinet current-sharing CAN abnormal, internal SCI communication abnormal	None	Buzzer beeps rapidly · yellow light bar
Smart mode alarm: generator mode enabled, generator charge prohibited, only one BSC system detected, system load exceeds the set safety load, power module no redundancy, power module redundancy insufficient, cabinet no redundancy, cabinet redundancy insufficient, system card no redundancy, self-load circuit breaker abnormal, self-load timeout alarm, inverter and bypass out of sync	None	Buzzer beeps slowly · yellow light bar

TABLE 2-16 Input dry contact and offline alarms

Fault	Protection	Alarm
Input dry contact alarm	None	Buzzer beeps slowly · yellow light bar
Battery abnormal, battery grounding abnormal, battery switch off	None	Buzzer beeps rapidly · battery indicator red · battery icon red · yellow light bar
Bypass switch disconnected	None	Buzzer beeps slowly · bypass indicator red · bypass icon red · yellow light bar
Output switch disconnected	None	Buzzer beeps slowly · yellow light bar
Battery discharge disabled (enabled), battery charge disabled (enabled)	None	Buzzer beeps rapidly · battery indicator red · battery icon red · yellow light bar
Generator mode, SPD abnormal, external maintenance bypass enabled, environmental smoke abnormal, utility abnormal	None	Buzzer beeps slowly · yellow light bar
Offline alarm: power module 1 / 2 / 3 offline, system card 1 / 2 offline	None	Buzzer beeps slowly · yellow light bar

⚠ CAUTION

After a battery under-voltage protection, the UPS restarts and recharges the battery when the utility returns.

CHAPTER 3

03 Planning the installation

Sizing the load and the number of modules, estimating the runtime and running on a generator — before you install.

3.1 Sizing the load

INFINITE delivers 80, 100, 135, 160 or 200 kVA. At the default output power factor of 1.0, kVA = kW: size the UPS on the watts (kW) the loads draw.

1. List every device that will run on the UPS.
2. Read its power in watts on its label or data sheet. If only volts and amps are given, multiply them (V × A): that gives VA, which is equal to or higher than the watts, so the estimate is on the safe side.
3. Add the watts and keep the total at or below 80 % of the rating: the margin covers start-up currents, growth and battery ageing.
4. Once the UPS runs, read the real load on the touchscreen (**Output info**, Section 6.3).

TABLE 3-1 Worked example — INFINITE 160 kVA

Load	Watts
Data hall IT load	100,000 W
Network and security	12,000 W
Building controls	8,000 W
Total	**120,000 W — 75 % of 160,000 W**

i NOTE The 80 and 100 kVA cabinets carry one 100 kW power module as standard, the 135–200 kVA cabinets two, each with room for one more as a redundant module (N+1). If a module fails or is removed for service, the others carry the load. Plan the load so that it stays within the capacity with one module out — and set the sleep redundancy on the touchscreen (Section 6.5.6).

3.2 Estimating the runtime

The battery is external and sized by AEC for the runtime you need. Give AEC the load and the minutes required.

1. Work out the load as a percentage of the rated output power.
2. Ask AEC for the runtime table of your battery set-up.
3. Allow a margin: the runtime is shorter with batteries that are old, cold, hot or not fully charged.
4. Halving the load roughly doubles the runtime or more.

NOTICE

With lead-acid batteries the string has 30 to 50 blocks of 12 V. With 40 blocks or more the UPS delivers its full rating; with fewer blocks the output power is derated (Table A-6). Ask AEC for the derated rating before you plan a string of fewer than 40 blocks.

3.3 Running on a generator

The PFC input (power factor above 0.99) loads a generator cleanly, and the wide input window (336 to 552 V line to line, Table A-4) rides through the swings of a standby generator.

- As a general rule, choose a generator rated at least 1.5 times the UPS input power, to cover the battery recharge as well.
- Let the generator reach stable voltage and frequency before it feeds the UPS; the UPS stays on battery until the input is within range.
- To limit the load on the generator, wire a generator-running contact to an input dry contact set as **Generator mode**: the UPS then derates the charging power (Table 6-16).
- If the UPS keeps returning to battery on the generator, the generator is too small or unstable.

3.4 Site and supply checklist

TABLE 3-2 Before installation

Item	Requirement
Supply	480 V three-phase, 3-wire + PE, 60 Hz; utility input 336 to 552 V line to line. The utility capacity is larger than the maximum input power of the UPS (Table 4-4).
Protection	External breakers on the utility, bypass, output and battery circuits, sized to NEC (Section 4.7.3). No ground-fault trip on the UPS feeds.
Floor	Level, solid, able to carry the cabinet (Table A-1) and, with the seismic kit, take M12 anchors.
Working space	NEC 110.26 in front of the cabinet, and the clearances of Table 4-2.
Cooling	Room temperature 32 to 104 °F (0 to 40 °C); heat and air flow of Table 4-3.
Cables	Top entry; conduits and conductor sizes to NEC (Table 4-6).
Battery	Battery cabinets or racks, external battery switch, cables and, if used, shunt-trip wiring (Section 4.7.8).
Maintenance bypass	External maintenance bypass switch, with its auxiliary contact wired to the UPS (Section 4.7.9).

CHAPTER 4

04 Installation

Unpacking, preparing the site, moving and placing the cabinet, fitting the options, the electrical connections and the final inspection.

4.1 Installation process

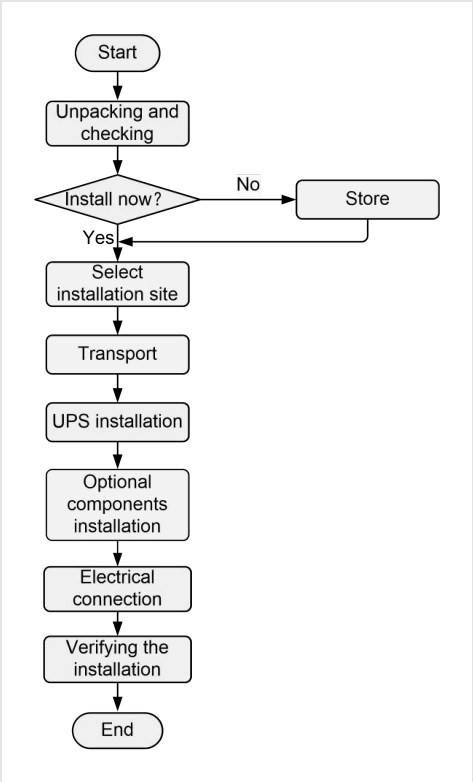

FIGURE 4-1 Installation process: unpack and check, install now or store, select the site, transport, install the UPS, install the options, electrical connection, verify the installation

4.2 Unpacking and checking

i NOTE The shipping crate is large. Choose the unpacking place in advance, as close as possible to the installation site.

4.2.1 Check the packaging

The UPS is fully tested before delivery, but it can be damaged in transport. Before you unpack, check the crate for holes, cracks or other signs of damage, and check the model on the label. If the packaging is damaged or the model is wrong, do not unpack: report it to the carrier and call AEC.

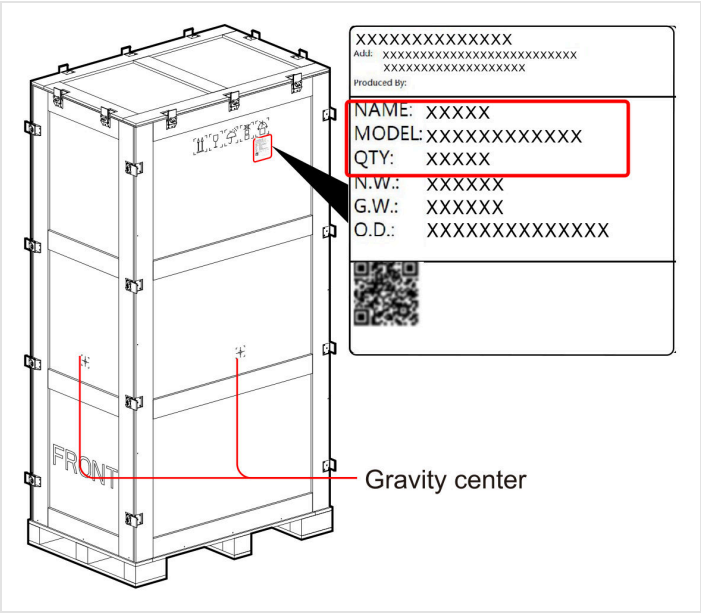

FIGURE 4-2 Model label and center-of-gravity mark on the crate

i NOTE

- The model and the center of gravity are marked on the crate (Figure 4-2).
- With a forklift, align the forks with the “forklift arm position” marks on the crate.

4.2.2 Check the deliverables

Check that the accessories are complete and undamaged against the packing list. Record any damage at once and call AEC.

i NOTE If the UPS is not put into service at once, repack it in its original packaging: seal the inner plastic bag with the desiccant (if any) inside, tape the crate and store it as required in Section 1.9.

4.3 Preparing the site

4.3.1 Tools

Adapt the tools to the site. All tools for electrical work must be insulated.

TABLE 4-1 Tools

Group	Tools
Protective equipment	Hard hat, safety glasses, safety shoes, high-visibility vest, dust mask, work gloves, antistatic gloves, insulated gloves, safety harness
Handling	Lift truck (module lift), manual pallet jack, forklift
Mechanical	Insulated flat and Phillips torque screwdrivers, insulated torque socket wrenches with extensions, adjustable wrench, torque wrench, Allen keys, ratchet, file, rubber mallet, claw hammer, hammer drill, marker, electric screwdriver, angled screwdriver, hole saw, open-end wrenches, stepladder
Cables	Diagonal cutters, wire stripper, crimper, hydraulic crimper, electrician's knife, heat-shrink tubing, heat gun, labels, cable ties, cable cutter, RJ45 crimping pliers, needle-nose pliers, pliers
Measuring	Level, steel rule, angle gauge, tape measure, laser level, thermometer, phase-rotation meter, insulation tester (megohmmeter), clamp ammeter, multimeter, network cable tester, voltage detector

Group	Tools
Cleaning and other	Vacuum cleaner, cotton cloth, brush, cable reel, sealant and gun, small cutter, paintbrush, flashlight, sandpaper, insulating tape

⚠ CAUTION

Use tools with insulation protection to prevent electric shock.

4.3.2 Environment

The UPS is IP20, for indoor installation only.

- Ambient temperature 32 to 104 °F (0 to 40 °C).
- Relative humidity 0 to 95 %, non-condensing.
- Altitude up to 6,562 ft (2,000 m).
- No vibration; the cabinet stands vertical within 5°.
- Good ventilation around the cabinet (Table 4-3).
- Away from water, heat sources and flammable or explosive materials.
- No direct sunlight, dust, smoke, volatile gases, corrosive substances, infrared, ultraviolet or other radiation, organic solvents, salt air or conductive (metal) dust.
- No strong vibration, noise sources or strong electromagnetic fields.
- A solid floor on stable ground, not in a low-lying area exposed to water or snow; the site stays above the highest recorded flood level.
- A rodent barrier at the door of the room.

i NOTE The best battery temperature is 68 to 86 °F (20 to 30 °C). Long operation above 86 °F (30 °C) shortens battery life; below 68 °F (20 °C) the runtime is shorter.

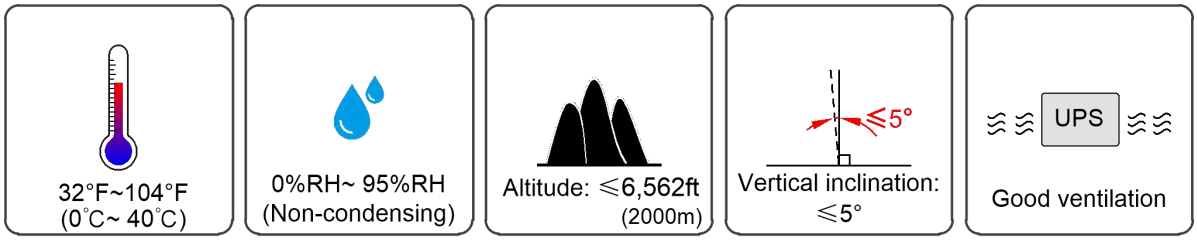

FIGURE 4-3 Environment: 32–104 °F (0–40 °C), 0–95 % RH non-condensing, altitude up to 6,562 ft (2,000 m), vertical within 5°, good ventilation

Supply requirements.

- The grounding electrode conductor and the equipment ground are ready.
- The utility voltage and capacity meet the UPS rating; allow for the reduced capacity of aged conductors.
- The utility input range of the UPS is 336 to 552 V line to line. The utility capacity must exceed the maximum input power of the UPS.
- Do not use breakers with ground-fault (residual-current) trip on the UPS feeds.

⚠ CAUTION

Install a 3-pole disconnect switch (the external battery switch) in the DC line between the battery and the UPS.

4.3.3 Working space and clearances

Leave room around the UPS for operation and ventilation. For cabinets side by side in a parallel system, the clearances apply to the whole line-up.

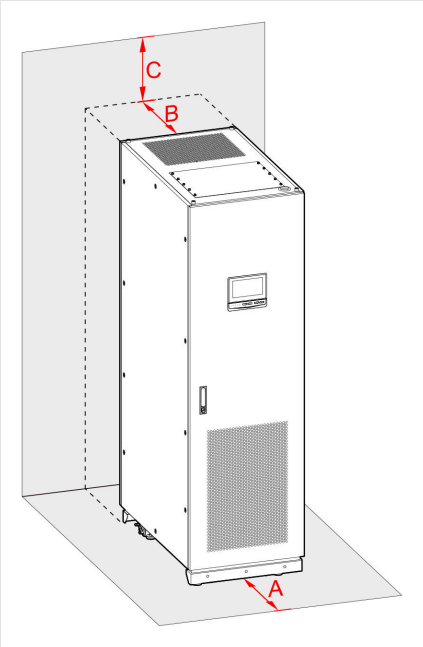

FIGURE 4-4 Clearances — A front, B rear and sides, C above

TABLE 4-2 Clearances

	Minimum	Note
A — front	31.5 in (800 mm) for operation; **at least 36 in (914 mm) to NEC 110.26**	NEC 110.26(A)(1), 480 V: 3 ft (Condition 1), 3.5 ft (Condition 2), 4 ft (Condition 3). The larger value applies. Width at least 30 in or the width of the equipment, door able to open 90°.
B — rear and sides	0	The cabinet can stand against a wall and next to other cabinets: all access is from the front.
C — above	19.7 in (500 mm)	Air exhaust and top cable entry.

Do not cover the ventilation openings: the internal temperature would rise and shorten the life of the UPS.

4.3.4 Heat and ventilation

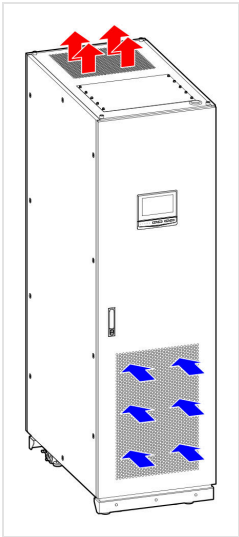

FIGURE 4-5 Air flow: in at the front grille, out at the top

TABLE 4-3 Heat dissipation and air flow

Item	80 kVA	100 kVA	135 kVA	160 kVA	200 kVA
Heat at 100 % load, normal mode, 480 V	—	—	—	—	18,425 BTU/h
Heat at 100 % load, ECO mode, 480 V	—	—	—	—	6,824 BTU/h
Minimum ventilation	971 cfm (1,650 m³/h)	971 cfm (1,650 m³/h)	1,383 cfm (2,350 m³/h)	1,383 cfm (2,350 m³/h)	1,383 cfm (2,350 m³/h)

i NOTE Heat figures are given for the 200 kVA model only. For the other ratings ask AEC, or estimate from the efficiency in Table A-3.

4.4 Moving the cabinet

Move the UPS with a forklift or lift it with a crane, as the site allows.

4.4.1 With a forklift

⚠ CAUTION

- Only trained personnel move the cabinet. Choose a freight elevator rated for the weight and enough people. Wear safety shoes, gloves and other protective equipment. If the weight exceeds the elevator's capacity, ask a specialist.
- Keep the center of gravity between the forks. Move slowly and smoothly. Strap the cabinet to the forklift. A designated person supervises the move.
- The forks must reach beyond the far side of the pallet, with an electric or a manual pallet jack.
- Watch the center of gravity at all times: no impact, no fall.
- Keep the cabinet upright, tilted no more than 15°. Do not drop or lift it suddenly.

i NOTE Insert the forks from the **side** of the cabinet.

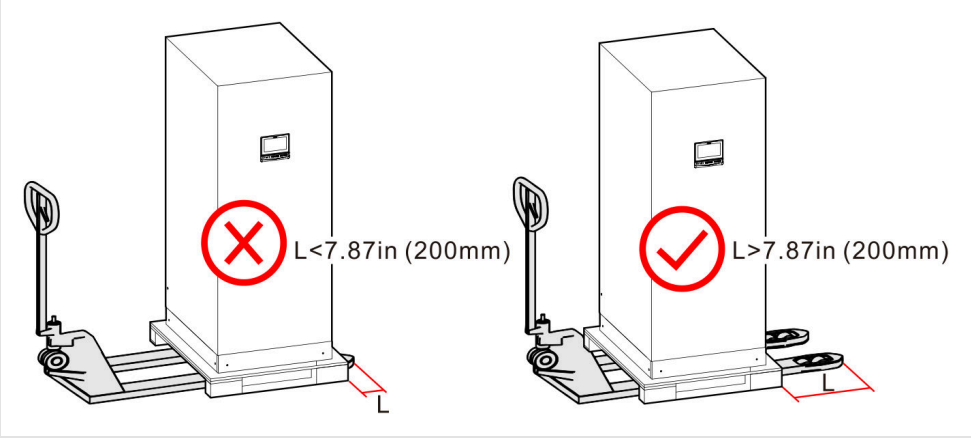

FIGURE 4-6 Forks from the side: the fork tips must stick out more than 7.87 in (200 mm) (right), not less (left)

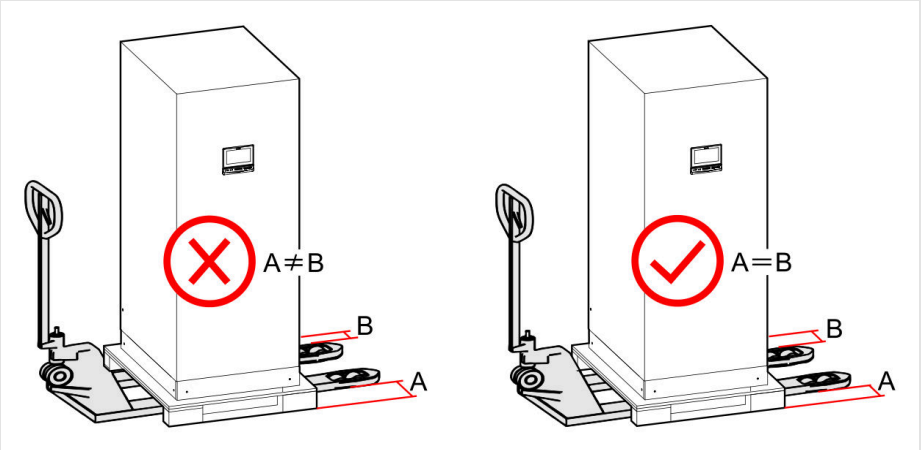

FIGURE 4-7 Center the forks under the cabinet: A = B (right), not A ≠ B (left)

4.4.2 With a crane

The UPS can be lifted by the four M12 eye bolts supplied.

1. Remove the four screws at the top corners of the cabinet (Figure 4-8).
2. Fit the four M12 eye bolts in their place (Figure 4-9).
3. Lift the cabinet with four slings and shackles, the angle between slings 90° or less (Figure 4-10).

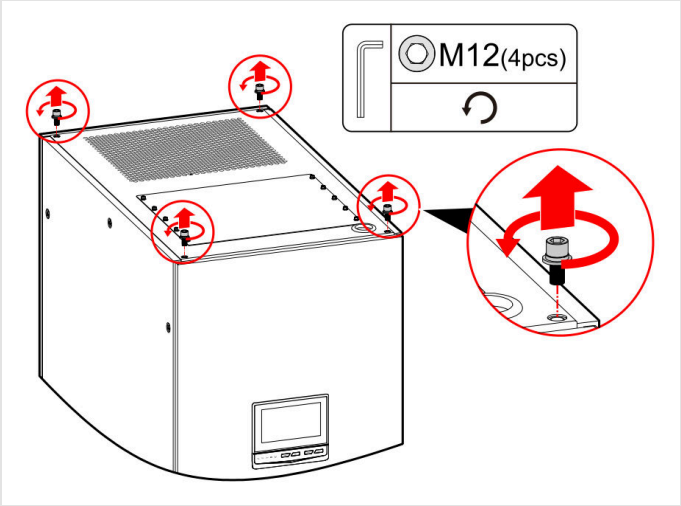

FIGURE 4-8 Remove the four top screws

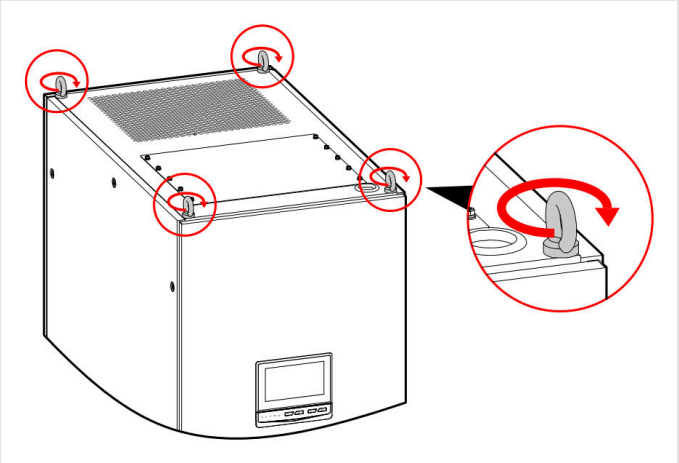

FIGURE 4-9 Fit the four M12 eye bolts

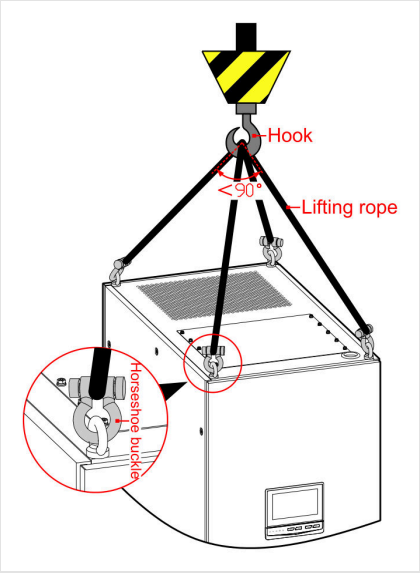

FIGURE 4-10 Lifting by the eye bolts: hook, slings at 90° or less, shackles

⚠ CAUTION

Only trained personnel lift the UPS. Do not tie ropes around the cabinet: it can slip or be damaged.

⚠ WARNING

Do not tilt or lay the cabinet down while it hangs: internal parts would be stressed and damaged. Do not swing the load; set it down vertically at its place.

4.5 Placing the UPS

Plan the position from the dimensions and the clearances.

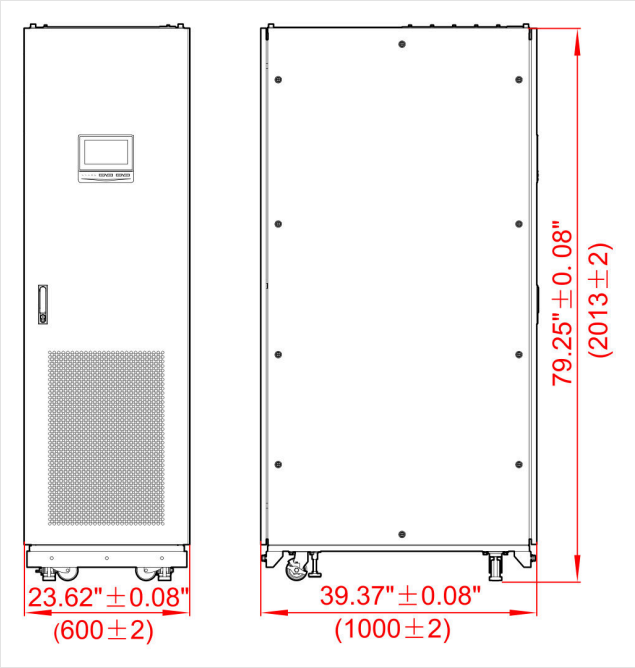

FIGURE 4-11 Dimensions: 23.62 ± 0.08 in (600 ± 2 mm) wide, 39.37 ± 0.08 in (1,000 ± 2 mm) deep, 79.25 ± 0.08 in (2,013 ± 2 mm) high without eye bolts

1. Remove the screws of the front and rear L-angles that hold the cabinet to the pallet (M12, 10 pieces) and remove the L-angles (Figure 4-12).
2. Remove the four wooden blocks that support the cabinet on the pallet, with a Phillips screwdriver.
3. Lift the UPS off the pallet with a forklift and set it on the floor (Figure 4-13).
4. Push the UPS on its casters to its place.
5. Set the caster brakes, then lower the leveling feet until they stand firmly on the floor and the cabinet is level (Figure 4-14).

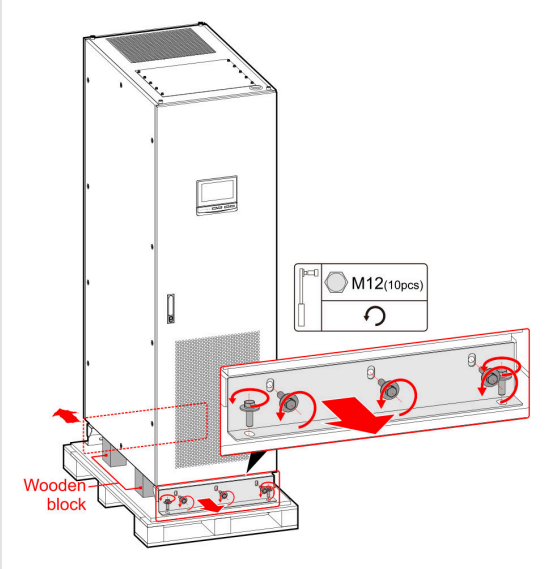

FIGURE 4-12 Remove the front and rear L-angles (M12 × 10)

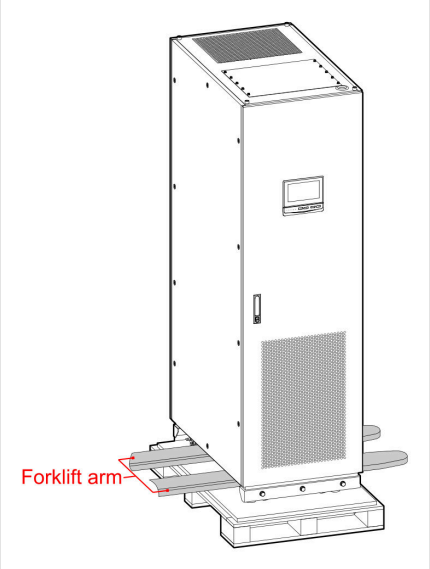

FIGURE 4-13 Lift the UPS off the pallet

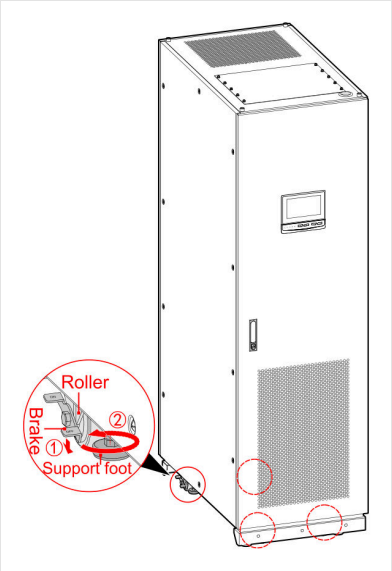

FIGURE 4-14 Brake the casters (1), lower the leveling feet (2)

4.6 Installing the options

i NOTE Keep the screws, plates and other parts you remove: you need them again.

4.6.1 Seismic kit

Install the seismic kit at the final position of the UPS, after placing it (Section 4.5).

⚠ CAUTION

The seismic kit fixes the UPS for good: install it only at the final position.

1. Take the UPS off the pallet as in Section 4.5, steps 1 to 3. Mark the four anchor holes on the floor (Figure 4-15).
2. Drill four holes of 0.55 in (14 mm) diameter, 1.18–1.97 in (30–50 mm) deep, with a hammer drill, for M12 expansion anchors.
3. Tighten each anchor slightly and set it upright in its hole. Tap it with a rubber mallet until the sleeve is fully in the hole. Tighten the anchor, then remove the nut, the flat washer and the lock washer (Figure 4-17).
4. Lift the UPS with a forklift (Figure 4-16).
5. Remove the screws of the front and rear angles of the UPS and remove the angles (Figure 4-18).
6. Align the seismic channel steels with the anchors and with the fixing holes of the UPS. Fix them to the UPS with the angle screws removed in step 5 (M12, 8 pieces, 420 lb-in / 47.5 N·m) (Figure 4-19).
7. Lower the UPS onto the anchors, move the forklift away, and fit the M12 nuts with lock washers and large square washers at the four corners (420 lb-in / 47.5 N·m) (Figure 4-20).
8. Fit the skirt panels: the side skirts to the seismic base with the M6 countersunk screws (40 lb-in / 4.5 N·m); the front and rear skirts to the side skirts with the M5 screws (27 lb-in / 3 N·m) (Figure 4-21).

⚠ CAUTION

Set each anchor as deep as its sleeve. The sleeve must not stand above the floor, or the UPS will not sit correctly.

i NOTE

- Lift the UPS at least 7.9 in (20 cm) to reach the screws.
- When the UPS stands against a wall, fit the rear skirt first, then the two side skirts.

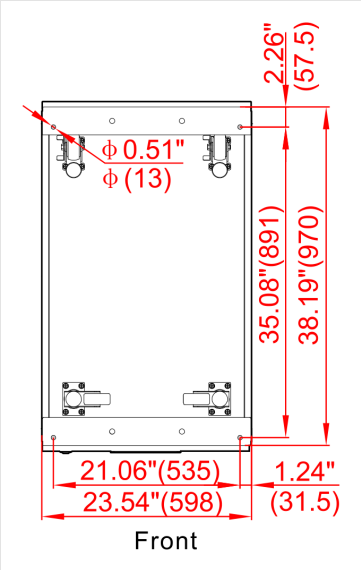

FIGURE 4-15 Anchor holes: 21.06 in (535 mm) × 35.08 in (891 mm), Ø 0.51 in (13 mm)

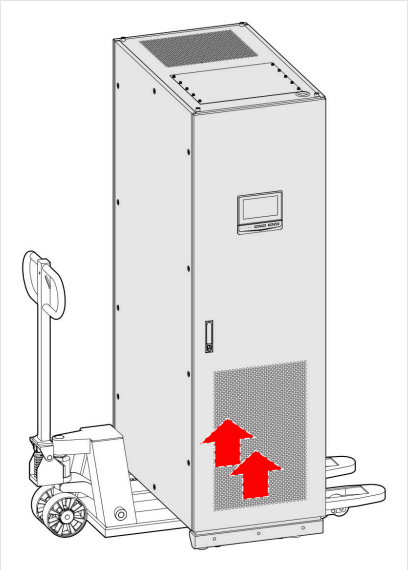

FIGURE 4-16 Lift the UPS

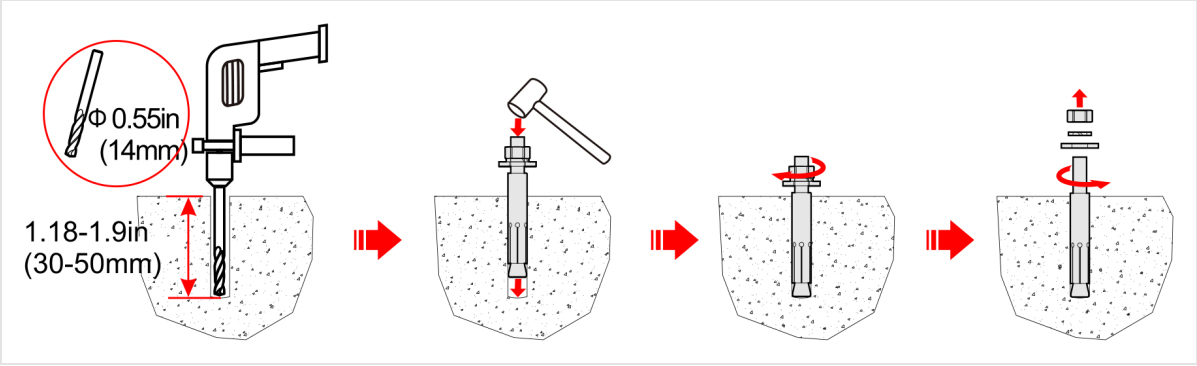

FIGURE 4-17 Drill Ø 0.55 in (14 mm), 1.18–1.97 in (30–50 mm) deep; set the anchor; remove nut and washers

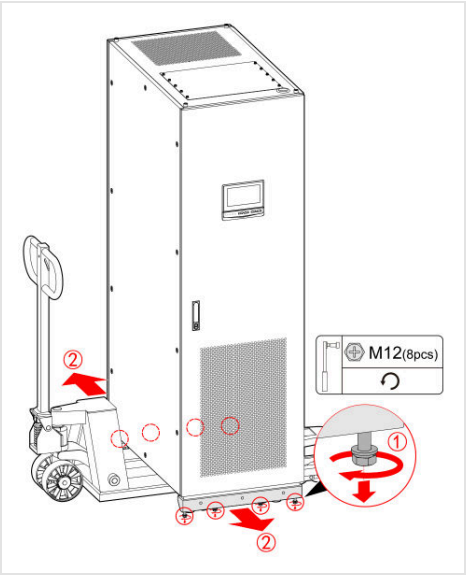

FIGURE 4-18 Remove the front and rear angles (M12 × 8)

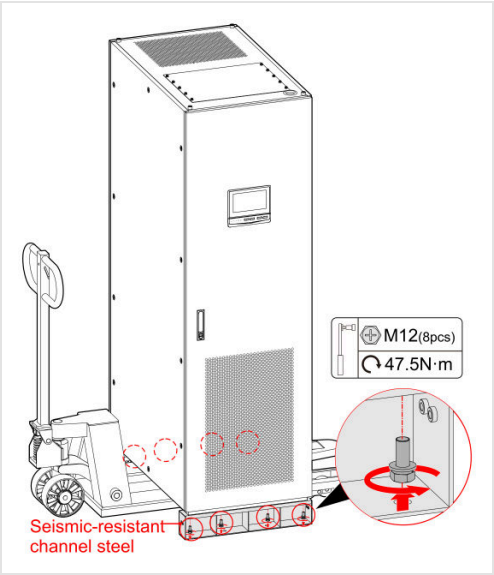

FIGURE 4-19 Fix the seismic channel steels

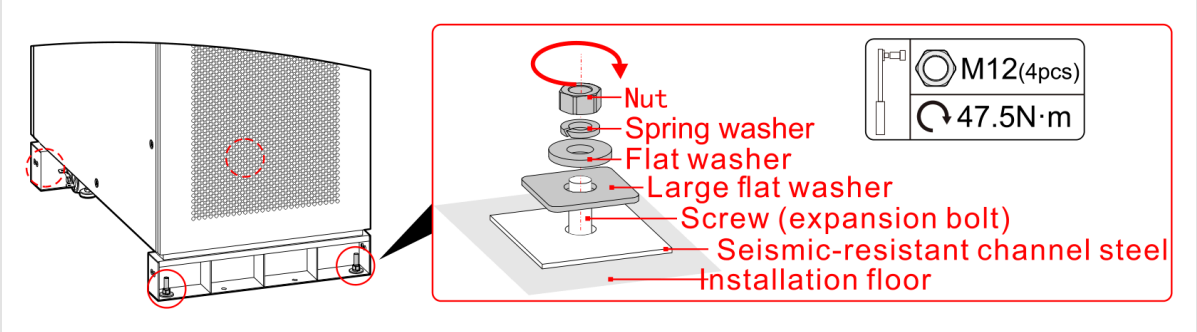

FIGURE 4-20 Lower the UPS onto the anchors: nut, lock washer, flat washer, large square washer on each corner

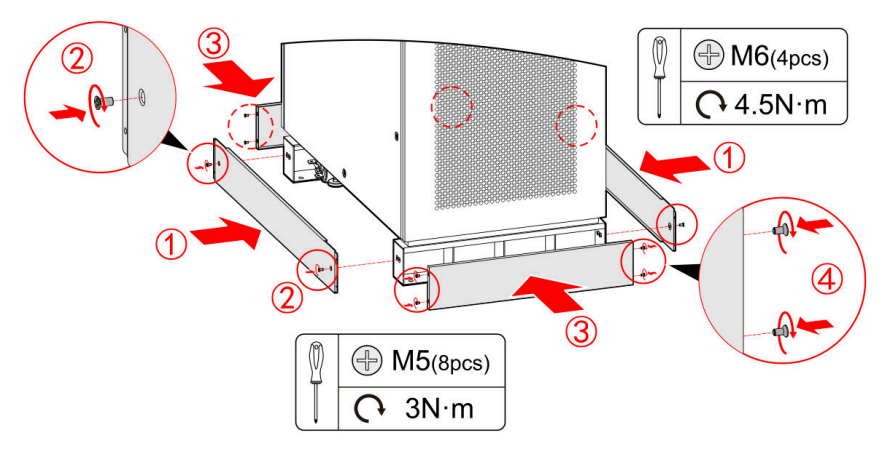

FIGURE 4-21 Skirt panels: side skirts with M6 screws (40 lb-in / 4.5 N·m), front and rear skirts with M5 screws (27 lb-in / 3 N·m)

4.6.2 SNMP-L network card

The SNMP-L card goes in slot 2 of the system control box (Figure 2-11). The cards are hot-swappable.

1. Remove the cover plate of slot 2 (Figure 4-22).

2. Slide the SNMP-L card into the slot, NETWORK port facing out, until it is seated, and fix it with its two screws (2.5 lb-in / 0.28 N·m) (Figure 4-23).
3. Set up the card as described in Chapter 8.

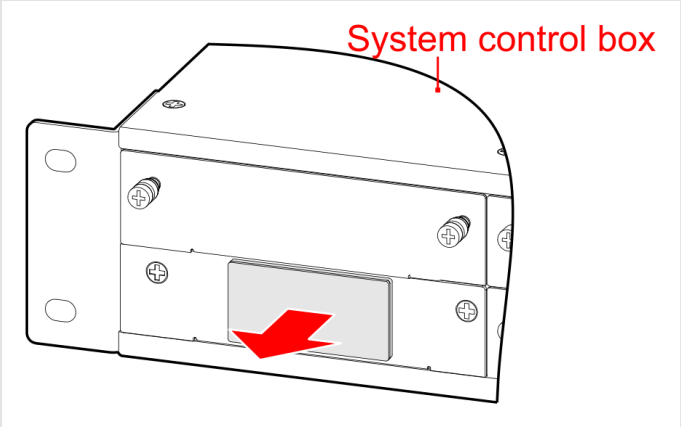

FIGURE 4-22 Remove the slot cover

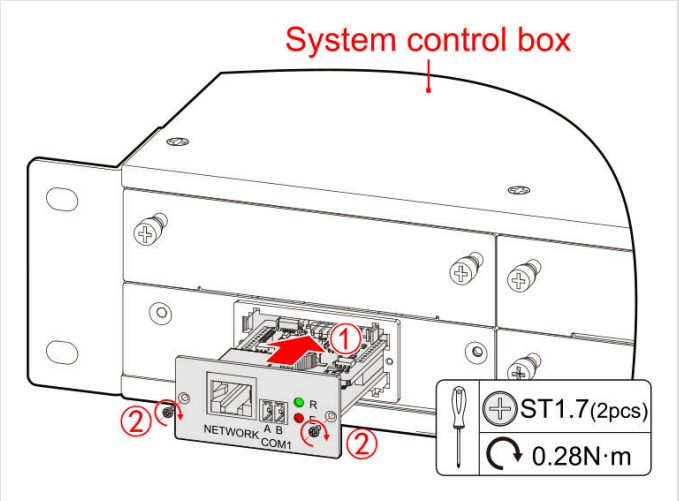

FIGURE 4-23 Fit the SNMP-L card (2 screws)

4.6.3 Expansion card

The dry contact expansion card and the BMS expansion card are fitted the same way, in slot 1. The pictures show the dry contact card.

1. Remove the two M3 screws of the slot 1 cover plate and remove the plate (Figure 4-24).
2. Slide the card into the slot and fix it with the two M3 screws (8 lb-in / 0.9 N·m) (Figure 4-25).
3. Ask AEC service to set **Expansion card mode** for the card fitted (Table 6-4).

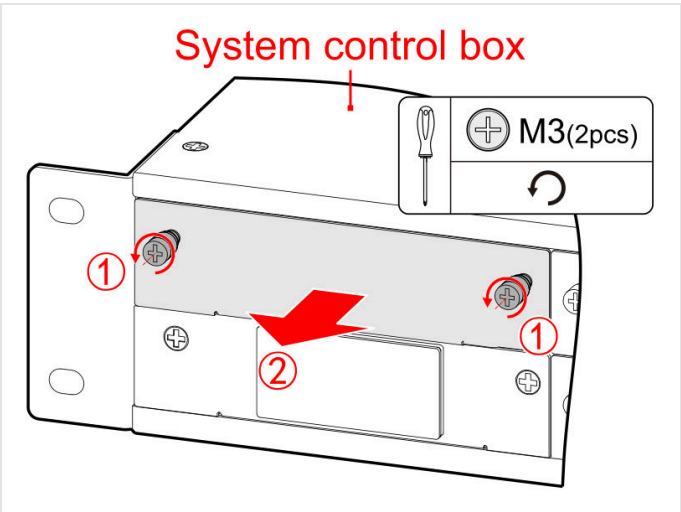

FIGURE 4-24 Remove the slot 1 cover (M3 × 2)

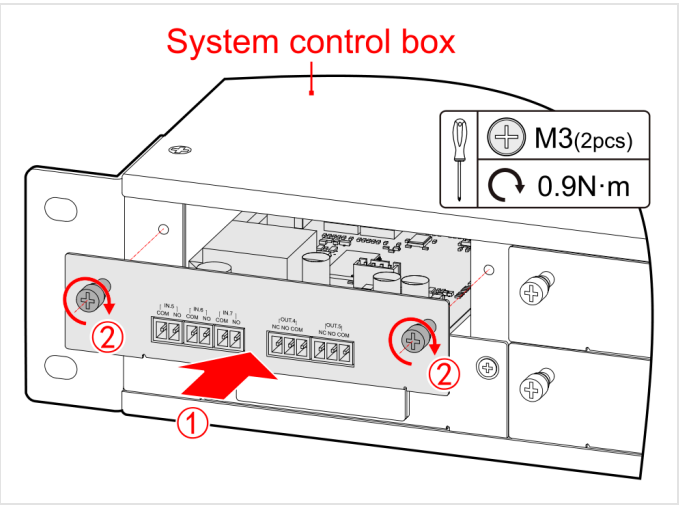

FIGURE 4-25 Fit the expansion card (8 lb-in / 0.9 N·m)

4.6.4 Parallel / BSC kit

Connect the PARALLEL ports of all UPS of the system with the parallel cables, through the communication cable inlet at the top, and tighten the connector screws. In a parallel system, link the ports in a ring (Section 2.10.2).

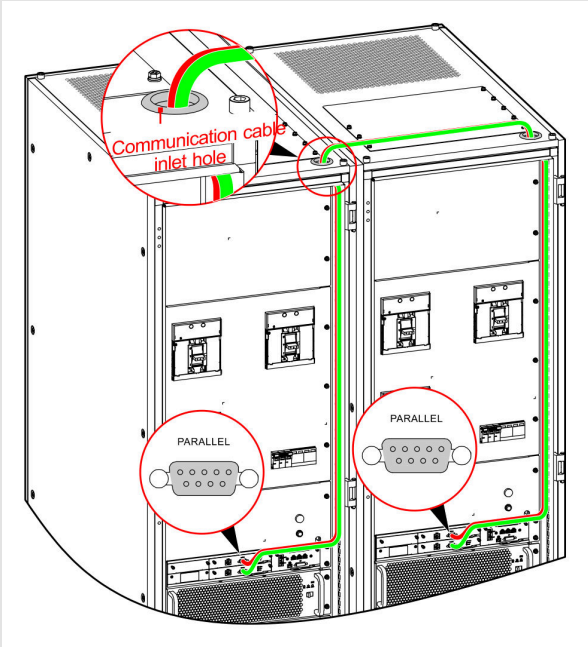

FIGURE 4-26 Parallel cables between two cabinets: in through the communication cable inlet at the top, to the PARALLEL ports

i NOTE The cable colors in the picture only tell the ports apart.

4.6.5 Battery temperature compensation kit

1. Fix the temperature sensor in the battery cabinet where the temperature is to be measured — where the battery is warmest.
2. Join the sensor wire to the extension wire and lock the connector.
3. Run the extension wire to the UPS and plug it into the **B-Temp** terminal of the system monitoring card (Figure 2-16, item 8).
4. Ask AEC service to enable **Battery temperature detection** (Table 6-8).

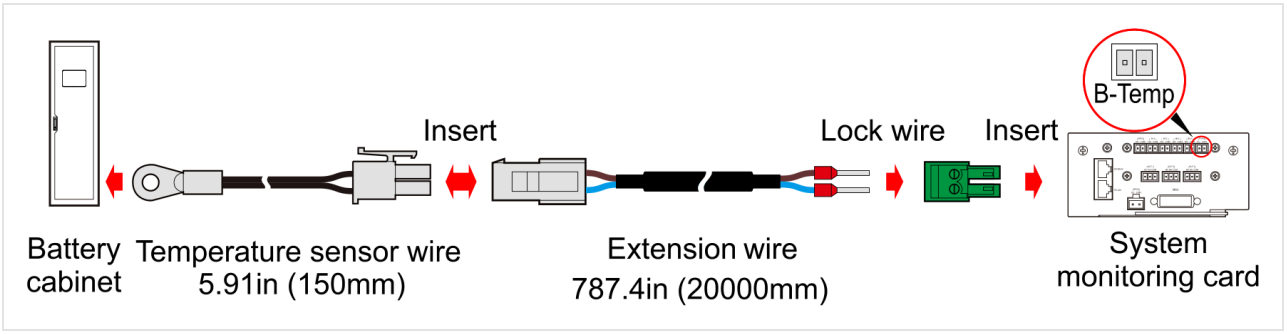

FIGURE 4-27 Battery cabinet → temperature sensor wire, 5.9 in (150 mm) → extension wire, 65.6 ft (20 m) → B-Temp on the system monitoring card

4.6.6 Surge protection kit

⚠ DANGER

Power the UPS off completely before you fit the SPD on site: open all switches, the external battery switch and the upstream breakers, and wait 10–15 minutes, then check with a meter.

1. Open the front door. Remove the six M6 screws of the front plate and remove the plate (Figure 4-28).
2. Fit the SPD and its breaker on the mounting rail (Figure 4-29).
3. Connect the SPD and SPD-breaker wires to their bus bars (Figure 4-30).
4. Knock out the opening for the SPD in the front plate and smooth the edges with a file (Figure 4-31).
5. Refit the front plate (M6, 40 lb-in / 4.5 N·m) and close the front door (Figure 4-32).

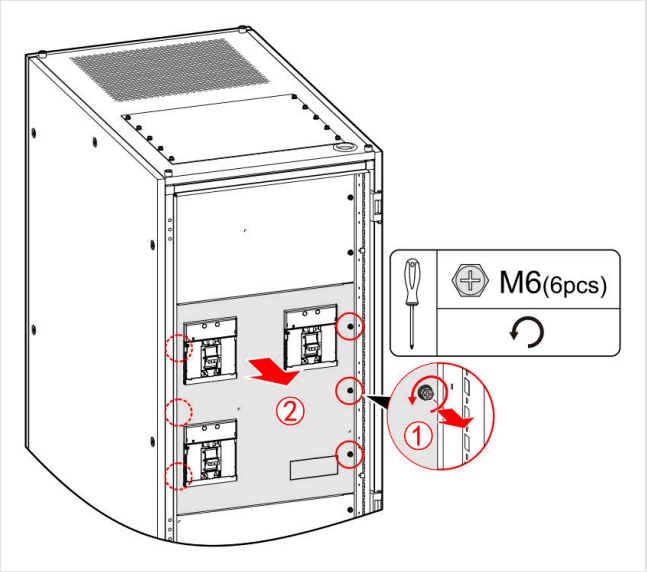

FIGURE 4-28 Remove the front plate (M6 × 6)

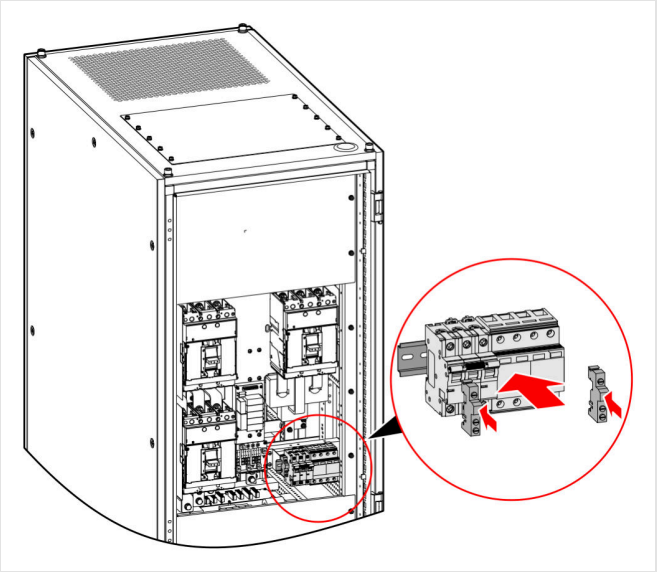

FIGURE 4-29 Fit the SPD and its breaker

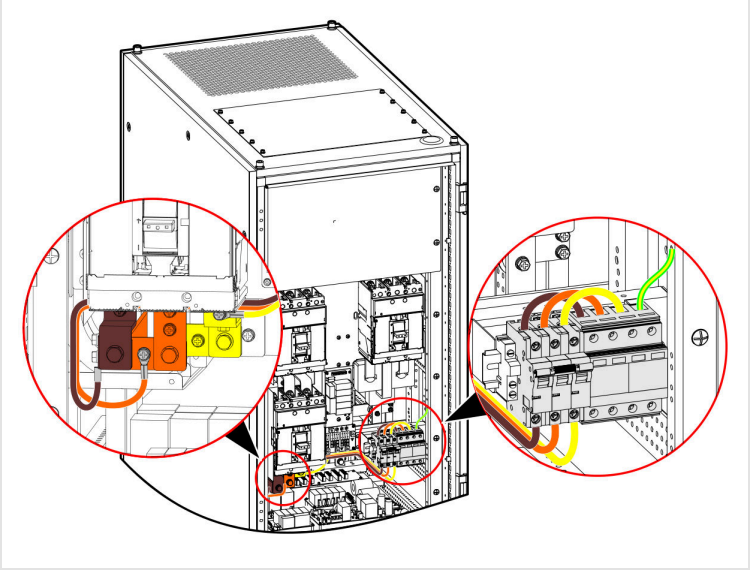

FIGURE 4-30 SPD wiring to the bus bars

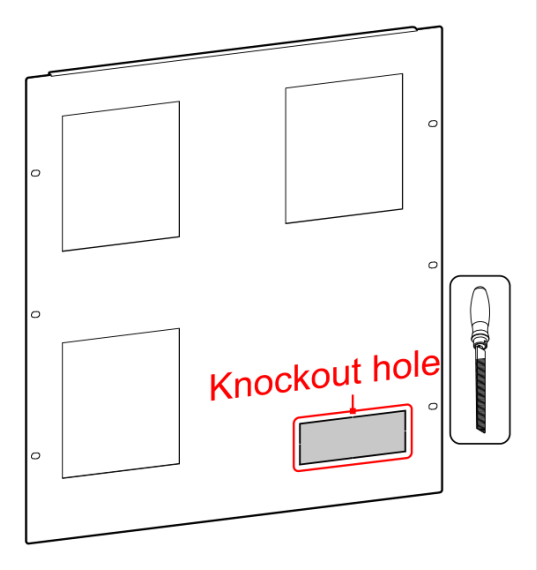

FIGURE 4-31 Knockout for the SPD in the front plate

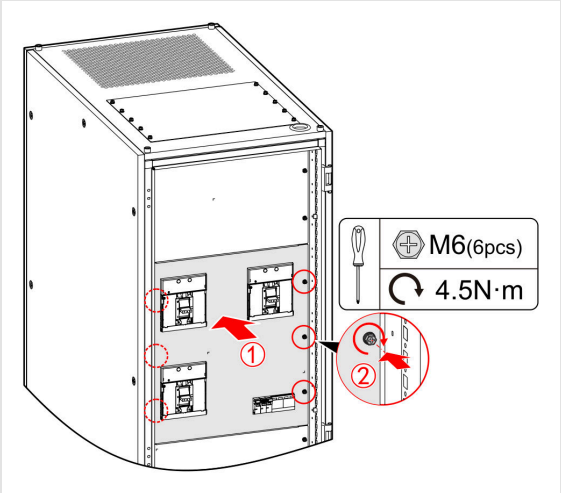

FIGURE 4-32 Refit the front plate (M6 × 6, 40 lb-in / 4.5 N·m)

4.6.7 Single power source kit

DANGER

Power the UPS off completely before you fit the single power source kit.

1. Open the front door. Remove the four M6 screws of the wiring cover plate and remove it (Figure 4-33).
2. Fit the three links between the utility input bus bars (L1, L2, L3) and the bypass input bus bars (Figure 4-34).
3. Refit the wiring cover plate (M6, 40 lb-in / 4.5 N·m) and close the front door (Figure 4-35).
4. Connect the input cables to the **utility** input bus bars only (Section 4.7.5).

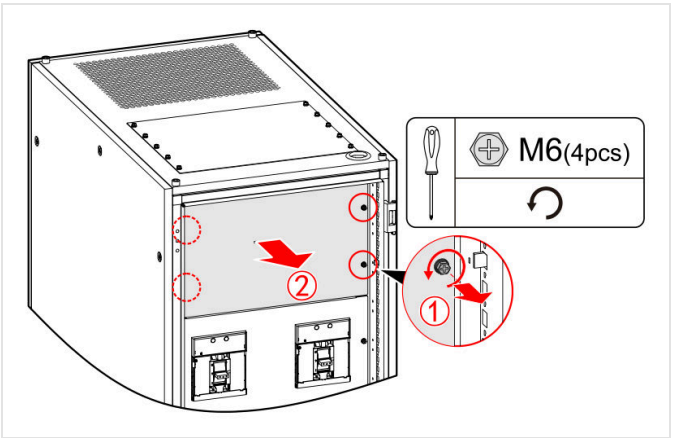

FIGURE 4-33 Remove the wiring cover plate (M6 × 4)

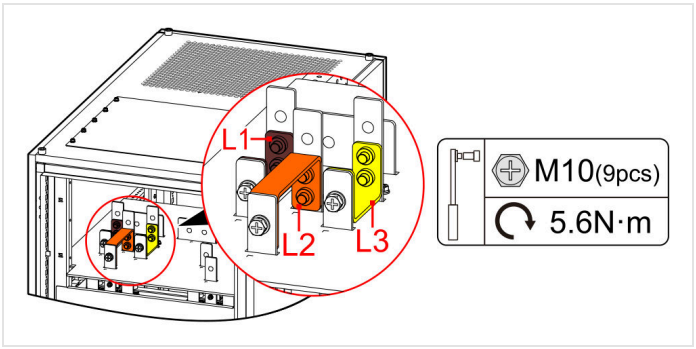

FIGURE 4-34 Fit the links L1, L2, L3 (135–200 kVA: M10 × 9, 50 lb-in / 5.6 N·m as marked)

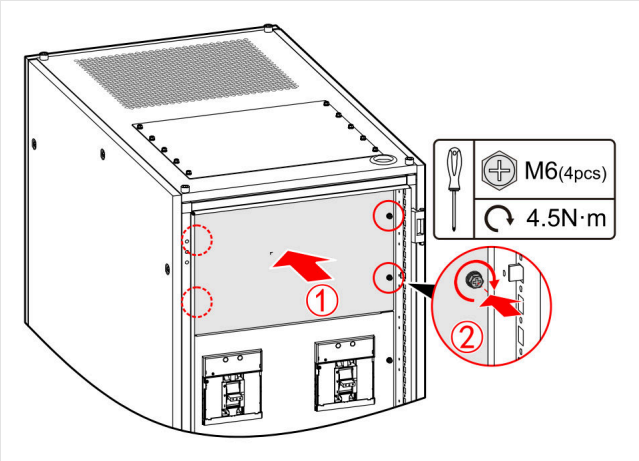

FIGURE 4-35 Refit the wiring cover plate

i NOTE The fixing screws of the kit for the 80 and 100 kVA cabinets are given in the source as "M101, M62" — most likely one M10 and two M6 screws. Check the screws supplied with the kit.

4.7 Electrical connection

DANGER

Before you make any connection, check that the utility switch, the output switch, the bypass switch, the external maintenance bypass switch and the external battery switch are all OFF (Figure 4-36), and lock out the upstream breakers.

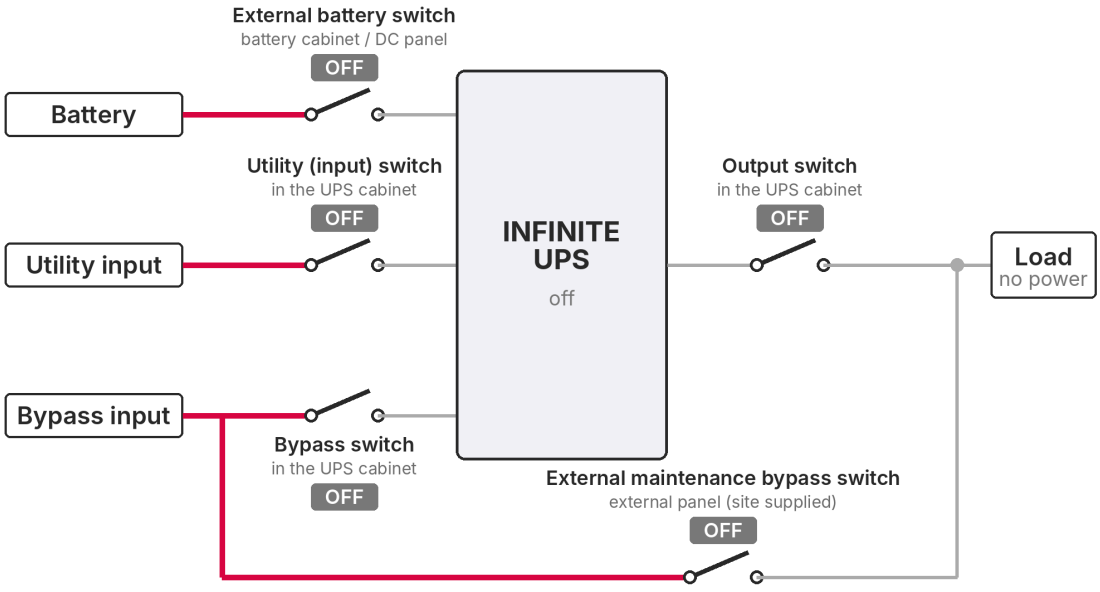

FIGURE 4-36 Before you connect: all switches OFF

⚠ CAUTION

- Prepare cables away from the UPS so that no debris falls inside: debris can cause arcing, damage and injury.
- Leave some slack in each cable before you connect it, so that the terminal is not under tension.

i NOTE The cable colors in the wiring pictures are for reference only. Choose colors to NEC and local codes; green or green/yellow is for grounding only.

4.7.1 Connection overview

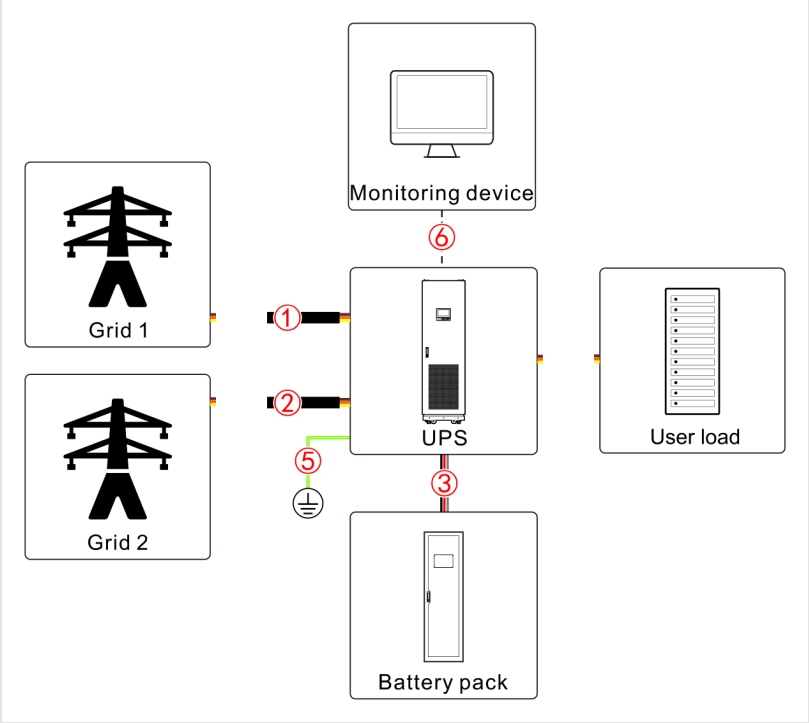

1. Utility input L1, L2, L3, from grid 1
2. Bypass input L1, L2, L3, from grid 2 (or grid 1 with the single power source kit)
3. Battery +, –, from the battery cabinet through the external battery switch
4. Output L1, L2, L3, to the load distribution
5. Equipment ground (PE)
6. Communication: dry contacts, RS485, Modbus, network

FIGURE 4-37 Connection overview

4.7.2 Currents and recommended cables

TABLE 4-4 Currents and factory-recommended cables, terminals and bolts

Item	80 kVA	100 kVA	135 kVA	160 kVA	200 kVA
Utility input L1, L2, L3 — current	112 A	137 A	193 A	224 A	274 A
Cable (copper, 194 °F / 90 °C)	1 × 1/0 AWG	1 × 2/0 AWG	2 × 1 AWG	2 × 1/0 AWG	2 × 2/0 AWG
Lug · bolt	DT-70 · M10	DT-70 · M10	DT-50 · M10	DT-70 · M10	DT-70 · M10

Item	80 kVA	100 kVA	135 kVA	160 kVA	200 kVA
Bypass input L1, L2, L3 — current	96 A	120 A	162 A	193 A	241 A
Cable (copper, 194 °F / 90 °C)	1 × 2 AWG	1 × 1 AWG	2 × 2 AWG	2 × 2 AWG	2 × 1 AWG
Lug · bolt	DT-35 · M10	DT-50 · M10	DT-35 · M10	DT-35 · M10	DT-50 · M10
Output L1, L2, L3 — current	96 A	120 A	162 A	193 A	241 A
Cable (copper, 194 °F / 90 °C)	1 × 3 AWG	1 × 1 AWG	2 × 2 AWG	2 × 2 AWG	2 × 1 AWG
Lug · bolt	DT-35 · M10	DT-50 · M10	DT-35 · M10	DT-35 · M10	DT-50 · M10
Battery, 40 × 12 V lead-acid — nominal current	174 A	217 A	293 A	347 A	434 A
— maximum current (10.5 V/block)	198 A	248 A	335 A	397 A	496 A
Cable (copper, 194 °F / 90 °C)	1 × 3/0 AWG	1 × 4/0 AWG	2 × 2/0 AWG	2 × 3/0 AWG	2 × 4/0 AWG
Lug · bolt	DT-95 · M10	DT-95 · M10	DT-70 · M10	DT-95 · M10	DT-95 · M10
Battery, 30 × 12 V lead-acid (derated output, see note) — nominal current	185 A	231 A	312 A	370 A	463 A
— maximum current (10.5 V/block)	211 A	264 A	356 A	423 A	529 A
Cable (copper, 194 °F / 90 °C)	1 × 3/0 AWG	1 × 4/0 AWG	2 × 3/0 AWG	2 × 3/0 AWG	2 × 250 kcmil
Lug · bolt	DT-95 · M10	DT-95 · M10	DT-95 · M10	DT-95 · M10	DT-120 · M10
Ground (PE) — cable	1 × 2 AWG	1 × 2 AWG	2 × 1 AWG	1 × 1/0 AWG	1 × 2/0 AWG
Lug · bolt	DT-35 · M10	DT-35 · M10	DT-50 · M10	DT-70 · M10	DT-70 · M10

- Signal cables: dry contacts 20 AWG with cord-end (ferrule) terminals E7508; RS485, Modbus, RS232, BMS and network: 8 × 24 AWG network cable (Cat 5e or better) with RJ45 plugs.
- Currents at 480 V. The battery currents are for a string without neutral. The maximum battery current is reached at the end of discharge, at 10.5 V per 12 V block. The battery cables are chosen for 40 blocks and suit strings of 30 to 50 blocks.
- **30-block strings.** With fewer than 40 blocks the UPS output is derated (Table A-6). The 30-block currents above correspond to about 80 % of the rated power: at full rated power on 30 blocks the current would be about one third higher (for example about 579 A nominal at 200 kVA). Ask AEC for the derated rating of your string.
- **DT-xx** is a copper compression lug for a conductor of xx mm² (DT-35 ≈ 2 AWG, DT-50 ≈ 1 AWG–1/0 AWG, DT-70 ≈ 2/0 AWG, DT-95 ≈ 3/0 AWG, DT-120 ≈ 250 kcmil). Use UL-listed lugs of the same size for the conductor you install.
- With one source for utility and bypass (single power source kit), size the input cables as the utility input.
- With AEC L6 lithium batteries, size the battery cables to NFPA 70 and the L6 cabinet manual.
- The cable sizes assume a single layer of cables spaced more than twice their diameter, an AC voltage drop below 3 % and a DC voltage drop below 1 %, and flexible copper cable rated 194 °F (90 °C). Keep AC runs below about 98 ft (30 m) and DC runs below about 164 ft (50 m).
- In a parallel system, keep the length and size of the bypass input and output cables of every UPS the same, so that the cabinets share the current evenly in bypass mode.

WARNING

The table is the factory recommendation, based on 90 °C cable. **In the US, size the conductors to NFPA 70** with Table 4-6: the UPS terminals are rated 167 °F (75 °C) (NEC 110.14(C)), and NEC 310.10(G) allows parallel conductors only in sizes 1/0 AWG and larger. Several factory sizes above (for example 2 × 2 AWG and 2 × 1 AWG) are therefore not allowed by NEC. Where the two tables differ, the larger conductor applies.

WARNING

Never overload the cables.

4.7.3 External breakers and NEC sizing

CAUTION

To reduce the risk of fire, install separate external breakers on the AC and DC sides of the UPS. Table 4-5 gives the recommended ratings to ANSI/NFPA 70.

WARNING

- Connect no load between the UPS and its breaker.
- Do not share one AC breaker between several UPS.

TABLE 4-5 Recommended external breakers

Breaker	80 kVA	100 kVA	135 kVA	160 kVA	200 kVA
Utility input, 3-pole	200 A / 500 V AC	200 A / 500 V AC	400 A / 500 V AC	400 A / 500 V AC	400 A / 500 V AC
Bypass input, 3-pole	200 A / 500 V AC	200 A / 500 V AC	400 A / 500 V AC	400 A / 500 V AC	400 A / 500 V AC
Output (downstream), 3-pole	200 A / 500 V AC	200 A / 500 V AC	400 A / 500 V AC	400 A / 500 V AC	400 A / 500 V AC
External maintenance bypass, 3-pole	200 A / 500 V AC	200 A / 500 V AC	400 A / 500 V AC	400 A / 500 V AC	400 A / 500 V AC
Battery, 40 blocks	250 A / 600 V DC	250 A / 600 V DC	500 A / 600 V DC	500 A / 600 V DC	500 A / 600 V DC
Battery, 30 blocks	250 A / 600 V DC	**300 A** / 600 V DC	500 A / 600 V DC	500 A / 600 V DC	**600 A** / 600 V DC

- **NEC check.** The UPS is a continuous load: every AC breaker is at least 125 % of the continuous current (NEC 215.2, 215.3): 140 / 171 / 241 / 280 / 343 A for 80 / 100 / 135 / 160 / 200 kVA, all within the ratings above. A smaller standard breaker down to that value is allowed (NEC 240.6), with conductors to match.
- **Battery breakers** are at least the maximum discharge current of Table 4-4. With 30-block strings the 100 kVA (264 A) and 200 kVA (529 A) currents exceed the 250 A and 500 A ratings: use 300 A and 600 A, as marked in bold.
- The ratings apply where the available short-circuit current at the UPS is below 65 kA. The utility input ratings are a reference.
- Choose the bypass input and output breakers for the rated current of the UPS. If the UPS will be overloaded, size them for the overload current.
- The maintenance bypass breaker is sized for one UPS. In a parallel system, size it for the total current of the system.

- Breakers with ground-fault (residual-current) trip are not recommended: the UPS leakage current can trip them.
- With several output breakers, none may exceed the recommended rating.
- With an external transformer at the output, the cabinet should start on the power-module (inverter) output first and then enable the bypass module; avoid feeding the transformer straight from the bypass.

TABLE 4-6 Minimum copper conductors to NEC — 167 °F (75 °C), NEC Table 310.16

Circuit	Breaker	Minimum conductor per phase or pole	Equipment grounding conductor (NEC 250.122)
Utility, bypass, output, maintenance bypass — 80 and 100 kVA	200 A	3/0 AWG (200 A)	6 AWG
Utility, bypass, output, maintenance bypass — 135, 160, 200 kVA	400 A	2 × 3/0 AWG (400 A) or 600 kcmil (420 A)	3 AWG
Battery — 80 kVA (40 or 30 blocks), 100 kVA (40 blocks)	250 A DC	250 kcmil (255 A)	4 AWG
Battery — 100 kVA, 30 blocks	300 A DC	350 kcmil (310 A)	4 AWG
Battery — 135, 160, 200 kVA (40 blocks), 135 and 160 kVA (30 blocks)	500 A DC	2 × 250 kcmil (510 A)	2 AWG
Battery — 200 kVA, 30 blocks	600 A DC	2 × 350 kcmil (620 A)	1 AWG

- Each conductor has an ampacity at 75 °C at least equal to the rating of its breaker. If you use a smaller breaker (see above), the conductor can be smaller to match.
- Sizes for copper, up to three current-carrying conductors in a raceway, 86 °F (30 °C) ambient. Correct them for other conditions (NEC 310.15) and for voltage drop.
- Parallel conductors (2 × …) are 1/0 AWG or larger, the same length, material and insulation (NEC 310.10(G)).
- The UPS terminals take two lugs per pole on the 135–200 kVA cabinets. Check that the lugs for the chosen size fit the bus bars before you order cable.
- The neutral is not used: INFINITE is a 3-wire system (Table A-4).

4.7.4 Lugs on the bus bars

⚠ WARNING

- A wrong connection order can cause fire. Stack the parts in the order shown.
- Tighten every connection. A loose or oxidized contact overheats and can start a fire.

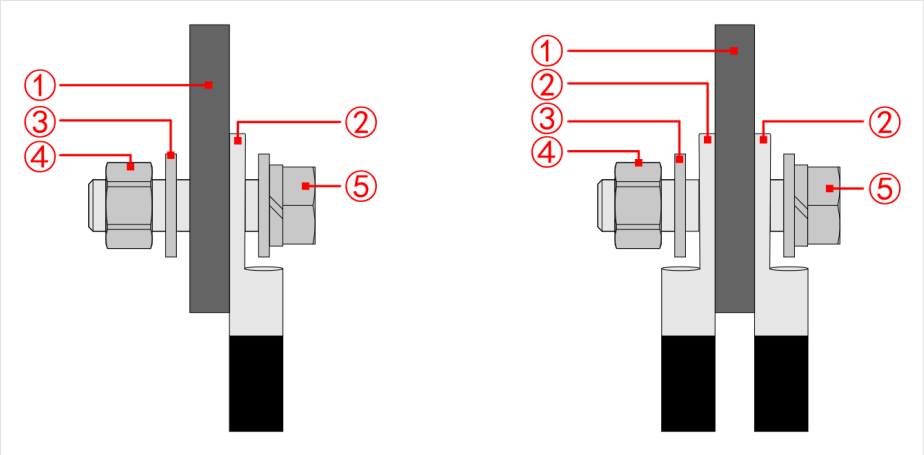

1. Bolt
2. Bus bar
3. Flat washer
4. Copper lug
5. Flat washer, lock washer and nut

FIGURE 4-38 Copper lug on a bus bar — one lug (left), two lugs (right)

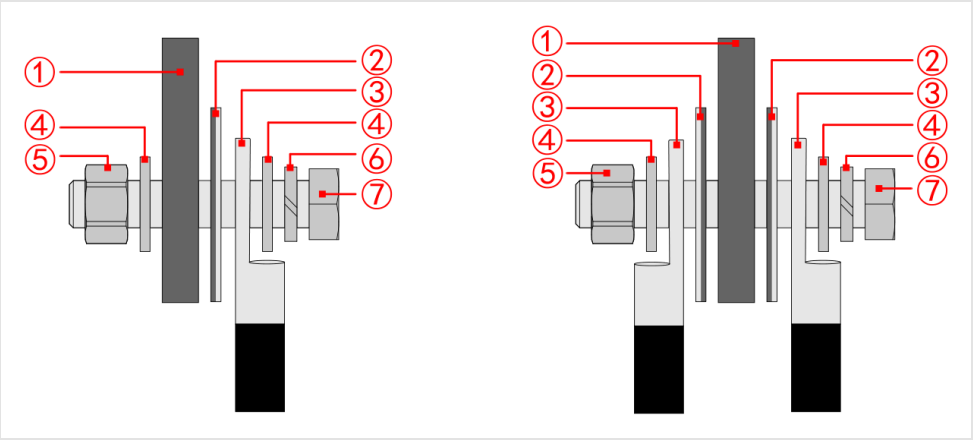

1. Bolt
2. Flat washer
3. Bus bar
4. Copper-aluminum transition plate
5. Aluminum lug
6. Flat washer, lock washer
7. Nut

FIGURE 4-39 Aluminum lug on a bus bar with a copper-aluminum transition plate — one lug (left), two lugs (right)

⚠ CAUTION

- With a copper-aluminum transition plate, put the aluminum face against the aluminum lug and the copper face against the copper bus bar (Figure 4-40).
- Where several lugs sit side by side on one bus bar, one plate can cover them all (Figure 4-41).

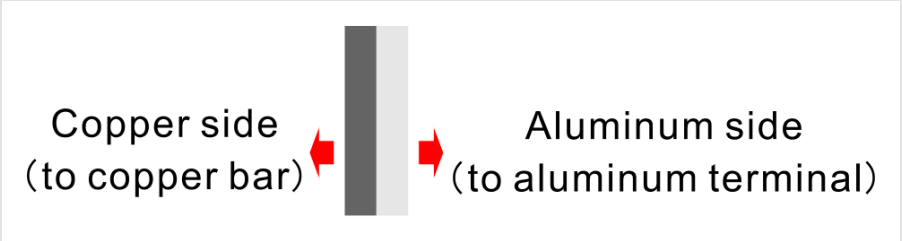

FIGURE 4-40 Copper side to the bus bar, aluminum side to the lug

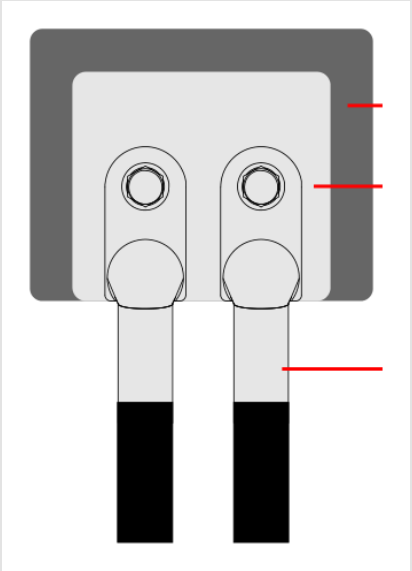

FIGURE 4-41 One plate for two lugs

4.7.5 Connecting the UPS

⚠ CAUTION

Make every connection firm. No loose contacts, no reversed wiring.

1. Open the front door with the key (Figure 4-42).
2. Check again that the input, output and bypass switches are OFF. Remove the top wiring cover plate and the front wiring cover plate (M6, 14 pieces) (Figure 4-43).
3. Drill the cable holes in the top cover plate for your conduits and cable sizes (Figure 4-44, Figure 4-45).
4. Refit the drilled top plate (M6, 10 pieces, 40 lb-in / 4.5 N·m), fit the conduits, and pull the utility input, bypass input, output, battery + and – and ground cables through their holes (Figure 4-46, Figure 4-47).
5. Crimp lugs on the cables. Strip the cables **outside** the cabinet, so that no insulation or strands fall inside (Figure 4-48).
6. Connect PE first, then the utility input, bypass input, output and battery cables to their bus bars (Figure 4-51, Table 4-7, Figure 4-52, Figure 4-53). Mount the lugs straight on the bus bars (Figure 4-49) and tighten the bolts (Figure 4-55).
7. Check the battery polarity and wire the external battery switch as in Figure 4-54.
8. Connect the communication cables (Section 4.7.6).
9. Refit the front wiring cover plate (M6, 4 pieces, 40 lb-in / 4.5 N·m) and close the front door (Figure 4-59).

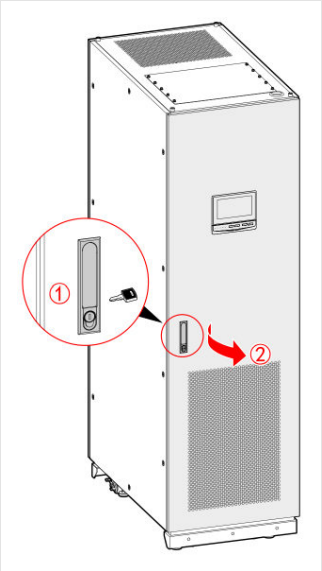

FIGURE 4-42 Open the front door with the key

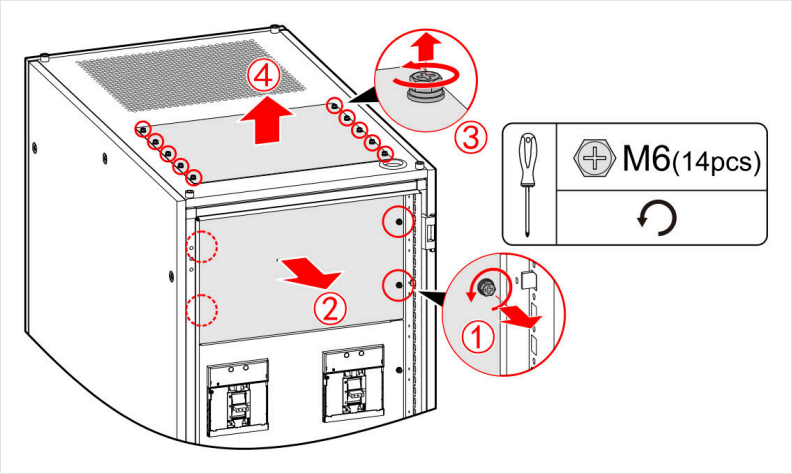

FIGURE 4-43 Remove the top and front wiring cover plates (M6 × 14)

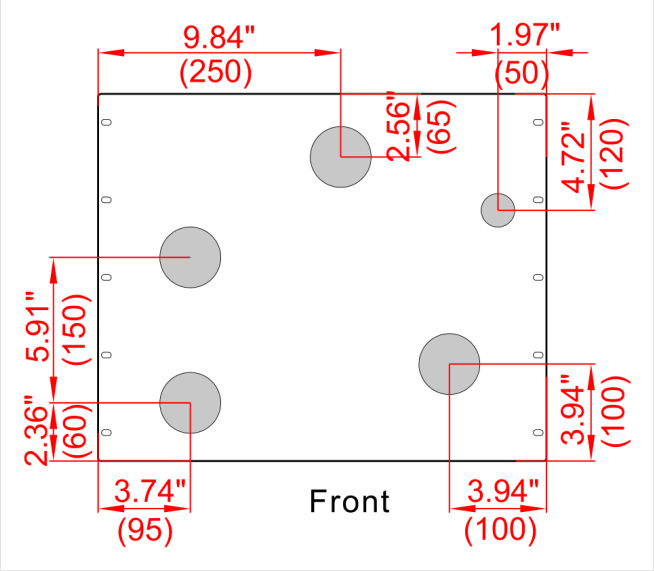

FIGURE 4-44 Top plate cable holes — 80 and 100 kVA (in, mm in brackets)

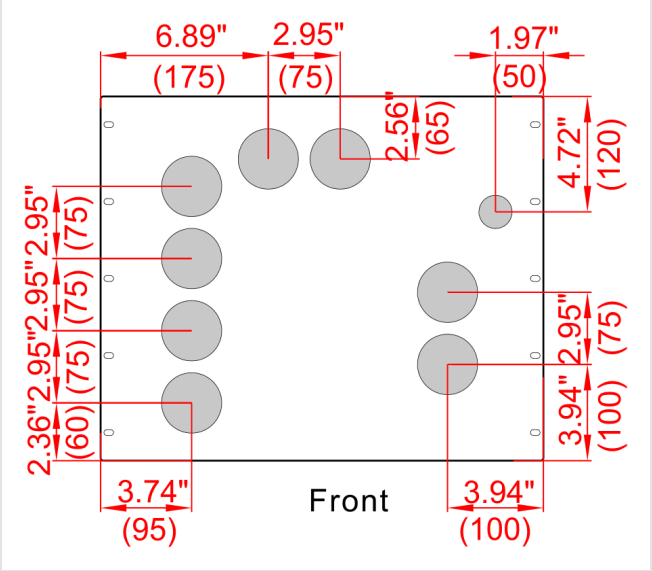

FIGURE 4-45 Top plate cable holes — 135, 160 and 200 kVA

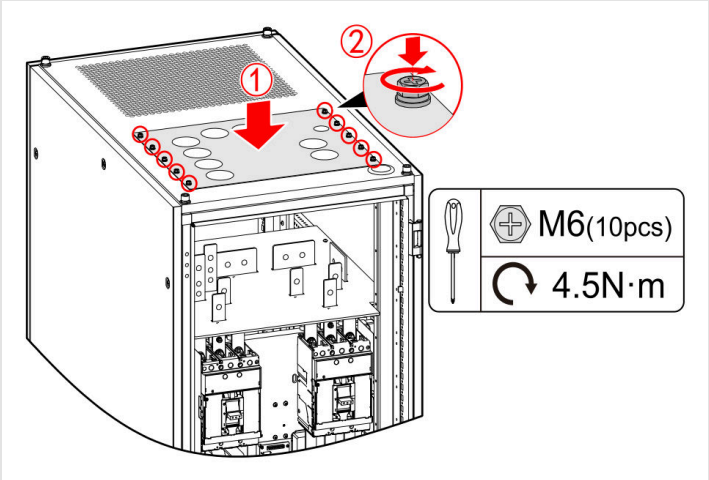

FIGURE 4-46 Refit the drilled top plate (M6 × 10, 40 lb-in / 4.5 N·m)

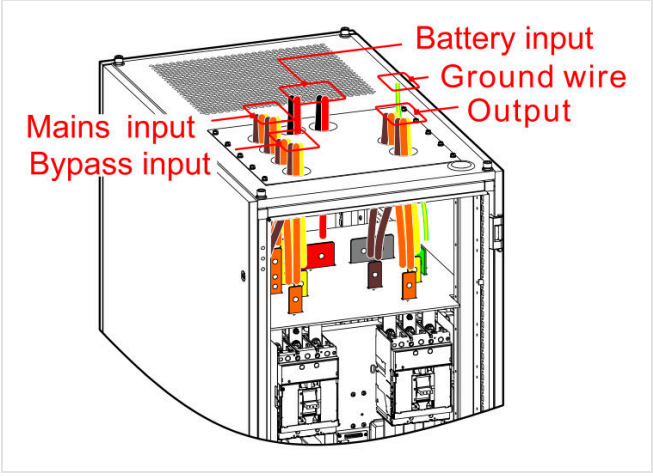

FIGURE 4-47 Cables in through the top: utility input, bypass input, battery input, ground, output

i NOTE

- On the 80 and 100 kVA cabinets each circuit (utility, bypass, battery, output) takes one set of cables. On the 135–200 kVA cabinets each takes two sets, each set through its own hole. The pictures show the 135–200 kVA cabinet.
- Every cable is crimped the same way.

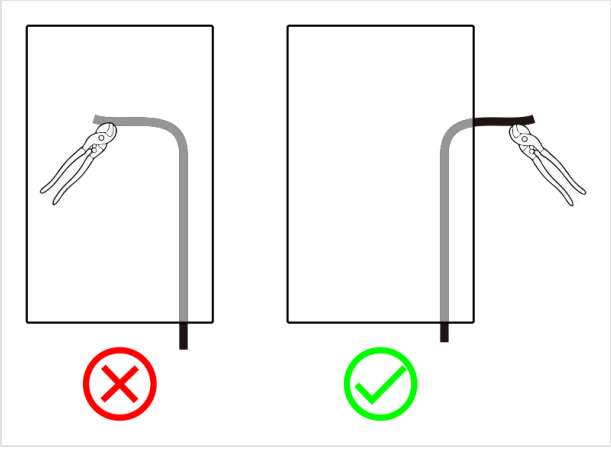

FIGURE 4-48 Strip outside the cabinet (right), not over it (left)

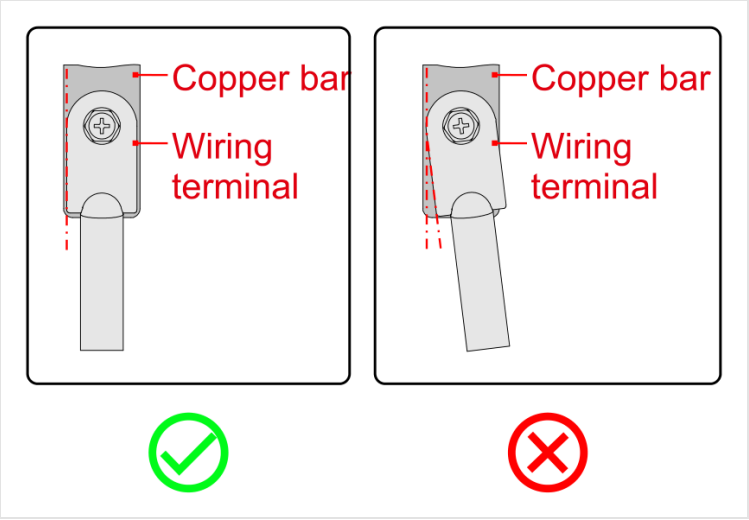

FIGURE 4-49 Lug straight along the bus bar (left), not turned (right)

⚠ CAUTION

Connect every UPS cabinet to the site ground. Mount the lugs straight along the bus bars (Figure 4-49): a turned lug can break down the insulation and cause a short circuit.

⚠ WARNING

Do not swap the ground conductors, the line conductors and the parallel connection points: this causes a short circuit.

Where the terminals are. The bus bars sit in the terminal compartment at the top of the cabinet, behind the front wiring cover plate and right under the roof cable entry (Figure 4-50). Figure 4-51 numbers every terminal; Table 4-7 gives the bolt, torque, conductor and lug for each one.



1. Roof cable entry plate (drill it for the conduits)
2. Terminal compartment: the bus bars (Figure 4-51)
3. Switch cover plate: bypass, output and input switches
4. System control box: communication ports (Section 4.7.6)

FIGURE 4-50 Illustration: terminal compartment with the front wiring cover plate removed, 200 kVA cabinet

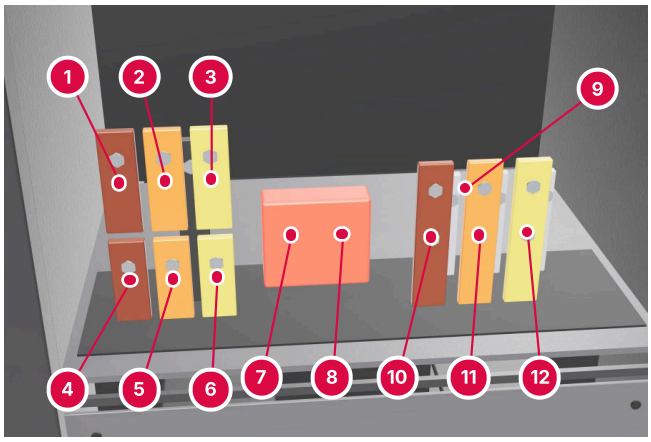

1. Utility input L1
2. Utility input L2
3. Utility input L3
4. Bypass input L1
5. Bypass input L2
6. Bypass input L3
7. Battery – (left hole of the battery block)
8. Battery + (right hole of the battery block)
9. Parallel connection point (parallel systems only)
10. Output L1
11. Output L2
12. Output L3

FIGURE 4-51 Illustration: bus bars of the 200 kVA cabinet seen from the front, front wiring cover plate removed

TABLE 4-7 Terminals of the 200 kVA cabinet

Terminal	Bolt	Torque	Conductor, factory (Cu 194 °F / 90 °C)	Conductor, NEC minimum (Cu 167 °F / 75 °C)	Lug (factory)
1–3 Utility input L1, L2, L3	M10	Standard M10 torque	2 × 2/0 AWG	2 × 3/0 AWG or 600 kcmil	DT-70
4–6 Bypass input L1, L2, L3	M10	Standard M10 torque	2 × 1 AWG	2 × 3/0 AWG or 600 kcmil	DT-50
7–8 Battery –, + (40 blocks)	M10	Standard M10 torque	2 × 4/0 AWG	2 × 250 kcmil	DT-95
7–8 Battery –, + (30 blocks)	M10	Standard M10 torque	2 × 250 kcmil	2 × 350 kcmil	DT-120
9 Parallel connection point	Ask AEC	Ask AEC	Ask AEC	—	Ask AEC
10–12 Output L1, L2, L3	M10	Standard M10 torque	2 × 1 AWG	2 × 3/0 AWG or 600 kcmil	DT-50
Ground (PE), grounding bar at the right (Figure 4-53)	M10	Standard M10 torque	1 × 2/0 AWG	3 AWG	DT-70

- Values from Table 4-4 (factory cables and lugs) and Table 4-6 (NEC minimum, with the recommended external breakers). Other ratings: see those tables. Where the two conductor columns differ, the larger conductor applies.
- Bolt and torque: every power terminal takes M10 bolts (Table 4-4), tightened to the standard M10 torque.

- The largest lug a bus bar accepts is not documented: check that the lugs for your conductor size fit before you order cable. The 135–200 kVA bus bars take two lugs per pole.
- The illustration does not show the grounding bar; its position is in Figure 4-53.

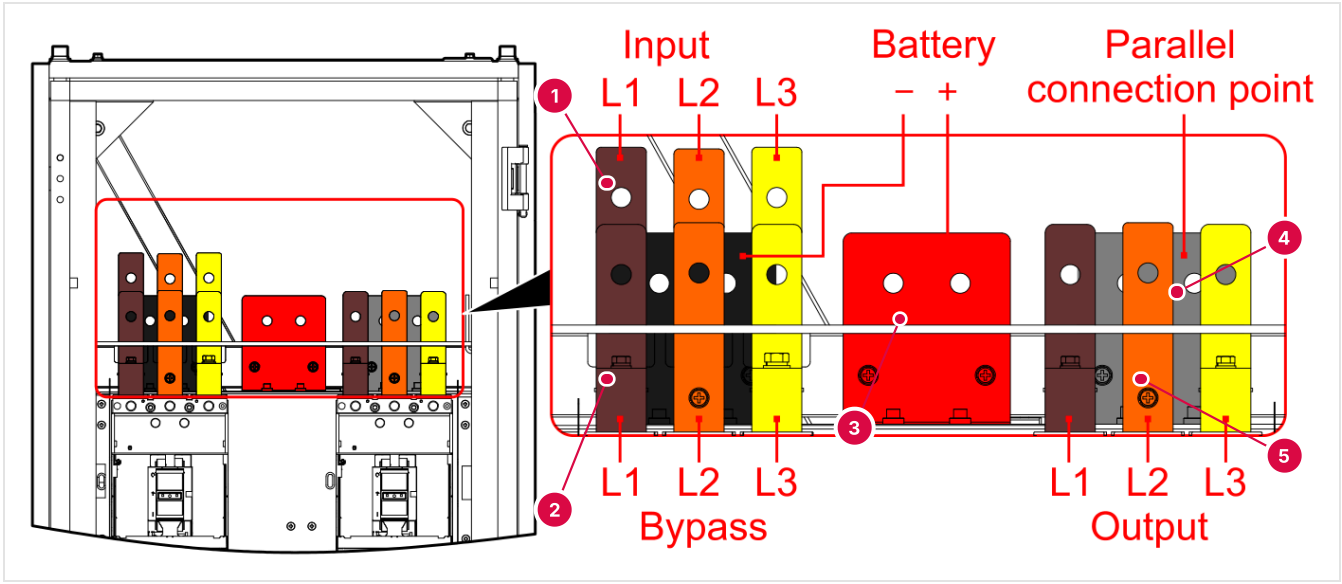

1. Utility input L1, L2, L3 (short bars, front)
2. Bypass input L1, L2, L3 (long bars, behind)
3. Battery – (left hole) and battery + (right hole)
4. Parallel connection point
5. Output L1, L2, L3

FIGURE 4-52 Bus bars behind the front wiring cover: input L1 L2 L3 (top), bypass L1 L2 L3 (bottom), battery – +, parallel connection point, output L1 L2 L3

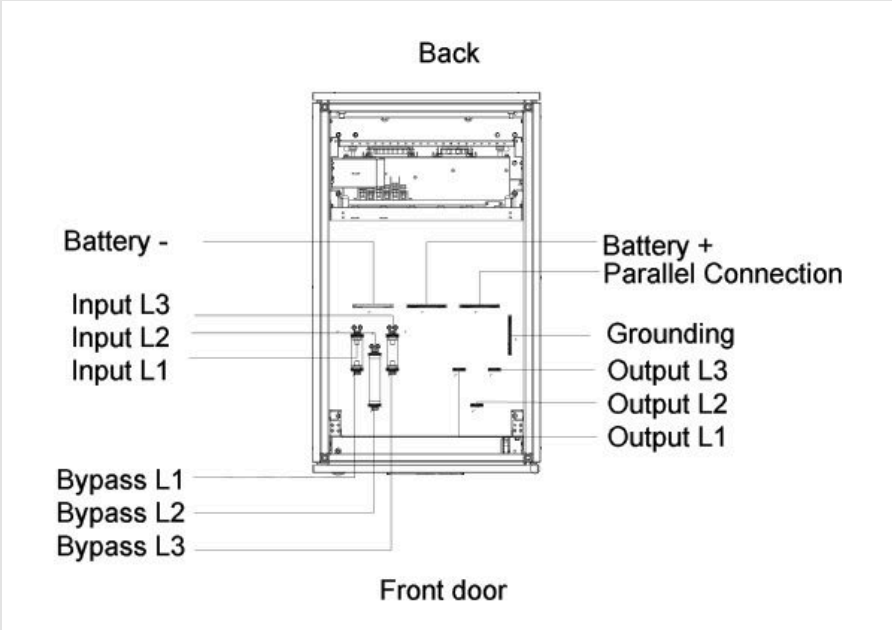

FIGURE 4-53 Terminal positions seen from above, front door at the bottom (from the AEC wiring drawing)

TABLE 4-8 Terminal order

Bus bars	Order, left to right seen from the front
Utility input	L1 · L2 · L3
Bypass input	L1 · L2 · L3 (below and behind the utility bars)
Battery	− · + (no neutral)
Parallel connection point	Linked between all UPS of a parallel system only (Section 4.7.7)
Output	L1 · L2 · L3
Ground (PE)	Grounding bar at the right of the terminal area (Figure 4-53)

CAUTION

The UPS leaves the factory for **dual input** (separate utility and bypass sources). When one source feeds both, fit the single power source kit (Section 4.6.7) and connect the grid L1, L2 and L3 to the **utility** L1, L2 and L3 bus bars only; leave the bypass bus bars without cables. For separate sources, wire both inputs.

Battery wiring. Connect the battery + and − cables to the battery bus bars, through the external battery switch (a 3-pole DC disconnect, Figure 4-54). Check the polarity with a voltmeter before you connect, and tighten all terminals.

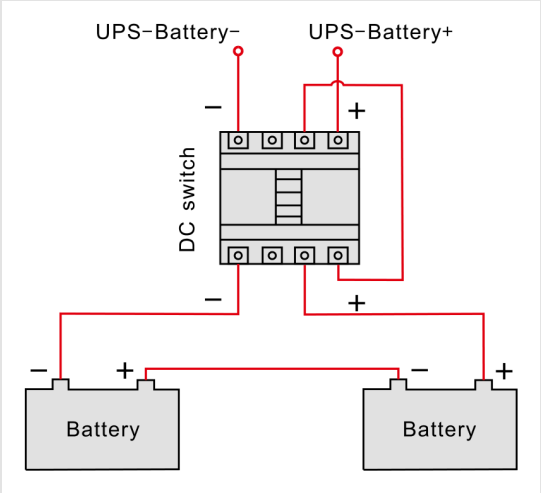

FIGURE 4-54 Battery wiring through the external DC switch: UPS battery – and + to the two battery strings

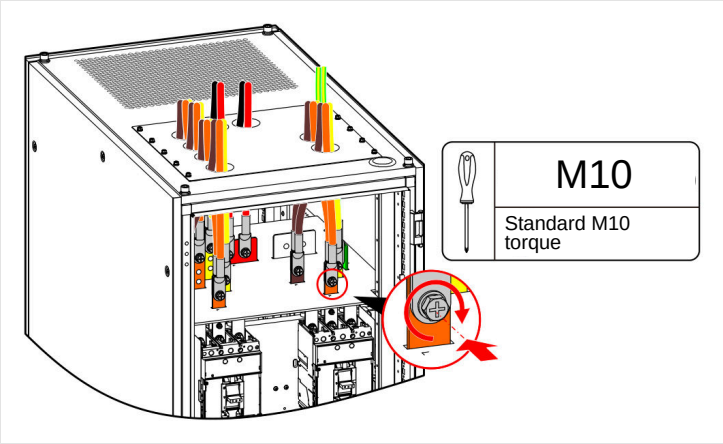

FIGURE 4-55 Tighten the terminal bolts: M10, standard M10 torque

NOTICE

Terminal bolts are M10 (Table 4-4). Tighten them to the standard M10 torque.

⚠ CAUTION

Do not apply fire-stop sealant inside the cabinet after wiring.

4.7.6 Communication wiring

1. Crimp the communication cables. Dry contacts use cord-end (ferrule) terminals (Figure 4-56). Network, RS485, RS232, BMS and Modbus use RJ45 plugs (Figure 4-57), pins as in Table 4-9.
2. Route the cables through the communication cable inlet at the top, down the right side of the cabinet to the system control box (Figure 4-58).
3. Plug each cable into its port: Figure 2-16, Figure 2-12, Figure 2-27, Figure 2-28.

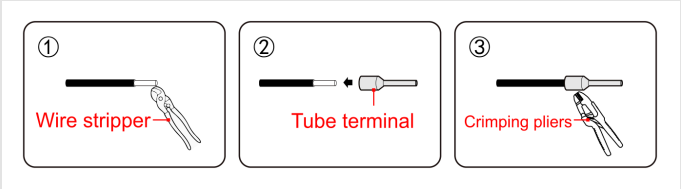

FIGURE 4-56 Dry contact wires: strip (1), fit the ferrule (2), crimp (3)

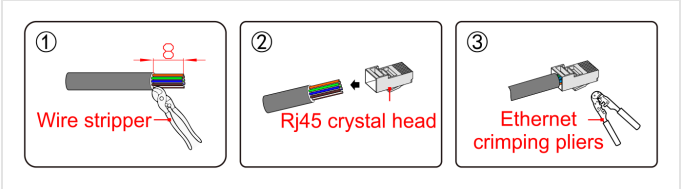

FIGURE 4-57 Network cables: strip (1), insert in the RJ45 plug (2), crimp (3)

TABLE 4-9 RJ45 pin assignment of the communication ports

Pin (T568B color)	Ethernet	MODBUS	RS232	RS485	BMS
1 (white-orange)	TX+	A	TX	A	A
2 (orange)	TX−	B	RX	B	B
3 (white-green)	RX+	Reserved	Reserved	Reserved	Reserved
4 (blue)	—	B	TX	B	B
5 (white-blue)	—	A	RX	A	A
6 (green)	RX−	Reserved	Reserved	Reserved	Reserved
7 (white-brown)	—	5 V power	5 V power	Reserved	Reserved
8 (brown)	—	GND	GND	GND	GND

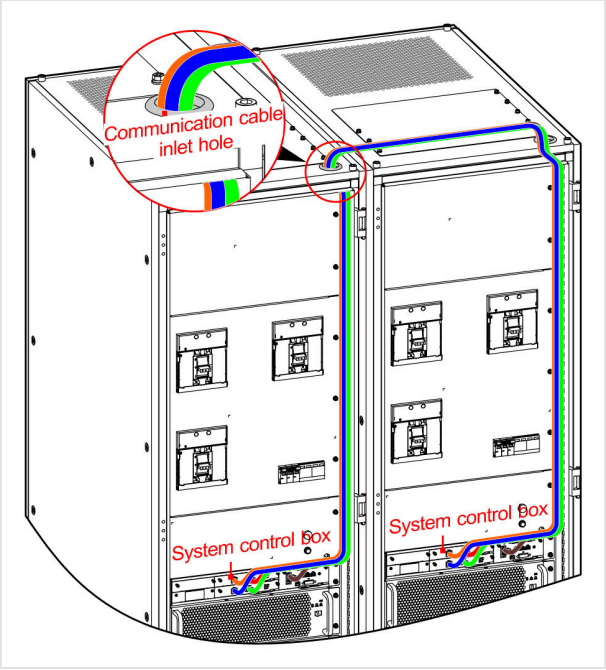

FIGURE 4-58 Communication cables: in through the top inlet, down the right side to the system control box

i NOTE The cable colors in the picture only show the routing path. Close the front wiring cover and the door when you are done (Figure 4-59).

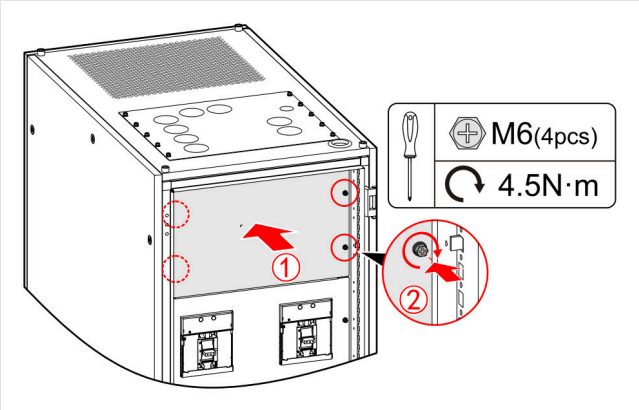

FIGURE 4-59 Refit the front wiring cover plate (M6 × 4, 40 lb-in / 4.5 N·m)

4.7.7 Parallel system

Install each UPS and its battery separately, then connect the parallel kit.

⚠ CAUTION

- Do not reverse the utility phase sequence: the UPS will not work properly.
- Wire the AC inputs of all UPS of the system the same way, with the same phase sequence, so that the bypass supplies are in phase. Before you power on each UPS, check that its input phases match one to one.

1. Connect each UPS as in Section 4.7.5, steps 1 to 3.
2. Connect the utility inputs of all UPS to the same grid, and the bypass inputs of all UPS to the same grid.
3. Connect the outputs of all UPS to the load or to the output distribution panel. Keep the bypass and output cables of all UPS about the same length.
4. Connect the battery input of each UPS to its own battery.
5. Link the parallel connection points of all UPS together (Figure 4-60).
6. Connect the parallel cables between the PARALLEL ports of all UPS and tighten the connector screws (Section 4.6.4).

⚠ CAUTION

Link the parallel connection points of **all** UPS. Otherwise the parallel system may not work correctly.

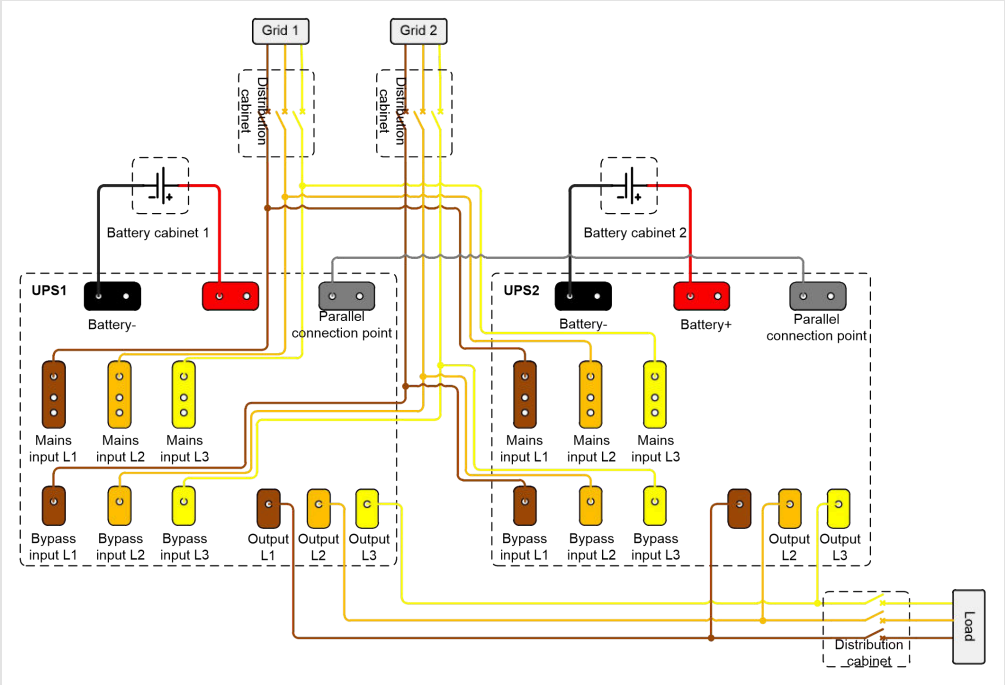

FIGURE 4-60 Parallel system wiring: grids 1 and 2, battery cabinets, utility, bypass and output of each UPS, parallel connection points linked

4.7.8 Battery trip wiring

When the site needs the battery breaker to trip from the UPS, connect the reserved battery-trip port at the top of the UPS to the shunt trip of the site battery breaker. The battery trip kit reverses the voltage through a dry contact to suit the shunt-trip unit.

i NOTE The battery trip kit supplies 24 V DC: it drives only shunt trips rated 24 V DC.

⚠ *DANGER*

Power the UPS off completely before you connect the battery trip kit. The site battery breaker must carry the maximum discharge current of Table 4-4.

1. Remove the screws of the upper front cover plate (M6, 4 pieces) and remove the plate (Figure 4-61).
2. Pass the battery trip extension cable through the wire hole and plug it into the reserved port on the right of the top beam (Figure 4-62, Figure 4-63).
3. Connect the far end to the battery-breaker trip unit by the wire-number markers (Figure 4-64): solder the two red wires to the 24 V terminal and the two black wires to the 0 V terminal, to reduce the voltage drop over long runs.
4. Refit the upper cover plate (M6, 40 lb-in / 4.5 N·m) (Figure 4-65).

i NOTE The battery trip extension cable from AEC is 65.6 ft (20 m) long; it can be shortened or extended on site.

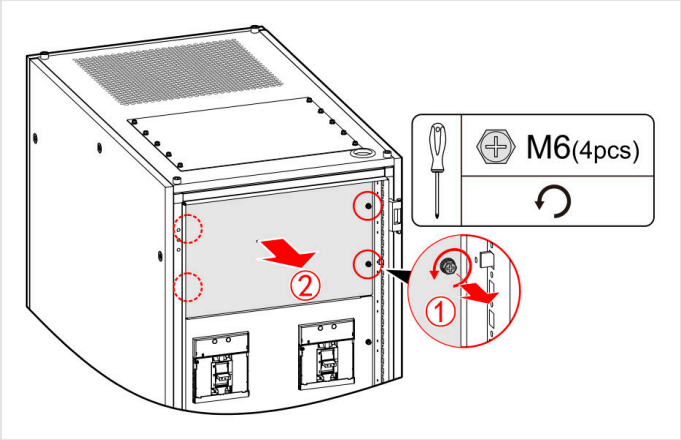

FIGURE 4-61 Remove the upper front cover plate (M6 × 4)

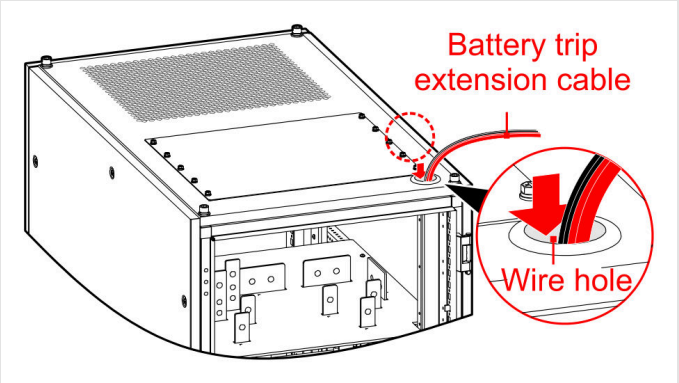

FIGURE 4-62 Battery trip extension cable through the wire hole

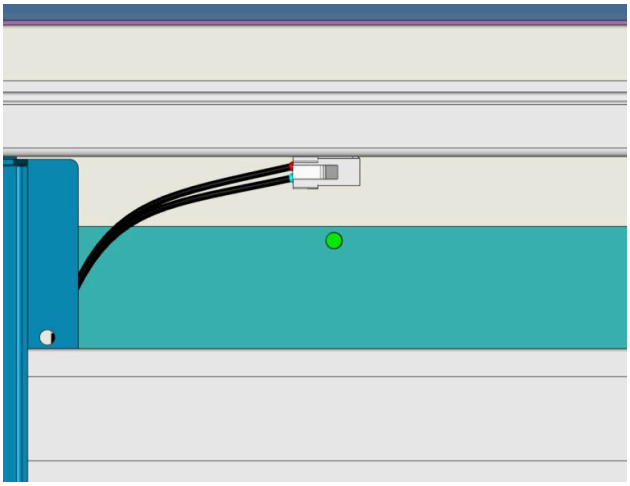

FIGURE 4-63 Reserved battery-trip port on the top beam

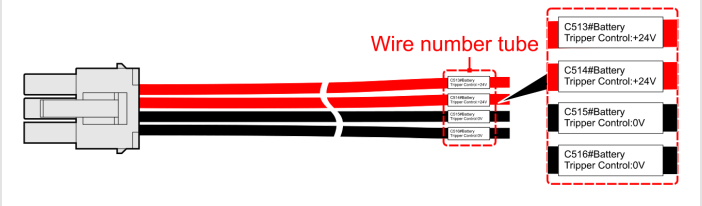

FIGURE 4-64 Battery trip extension cable: connector and wire-number markers (+24 V, 0 V)

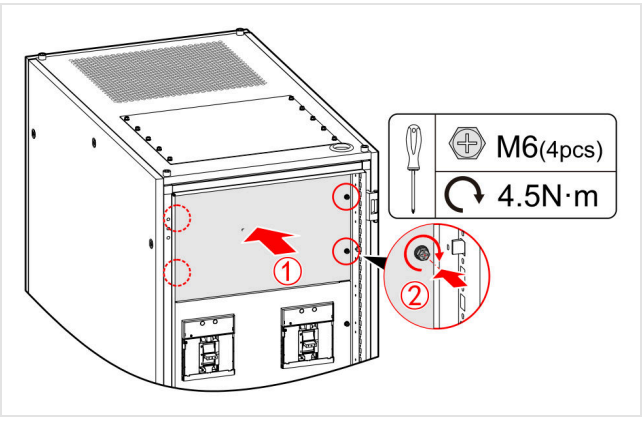

FIGURE 4-65 Refit the upper cover plate (M6 × 4, 40 lb-in / 4.5 N·m)

4.7.9 Maintenance bypass status wiring

To let the UPS see the position of the external maintenance bypass switch, connect the detection wire reserved at the top of the UPS to an auxiliary contact of that switch.

DANGER

Power the UPS off completely before you connect the detection wire.

1. Remove the upper front cover plate (M6, 4 pieces) (Figure 4-66).
2. Pass the detection wire through the top cable hole and plug it into the reserved interface on the right of the top beam (Figure 4-67).
3. Connect the far end to the auxiliary contact of the external maintenance bypass switch by the wire-number markers: NO contact and common (Figure 4-68).
4. Refit the upper cover plate (M6, 40 lb-in / 4.5 N·m) (Figure 4-69).

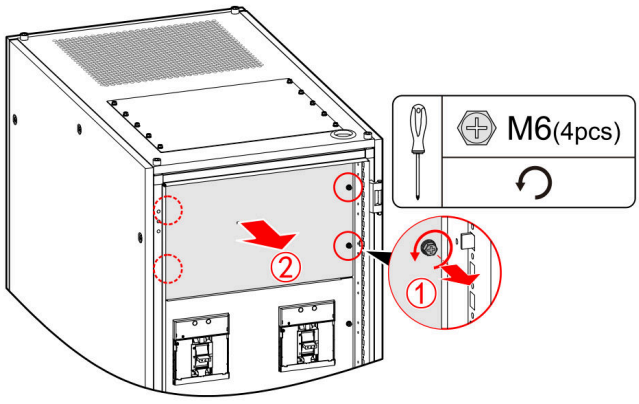

FIGURE 4-66 Remove the upper front cover plate

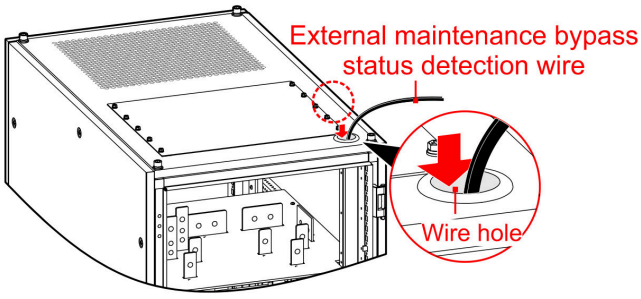

FIGURE 4-67 Detection wire through the wire hole

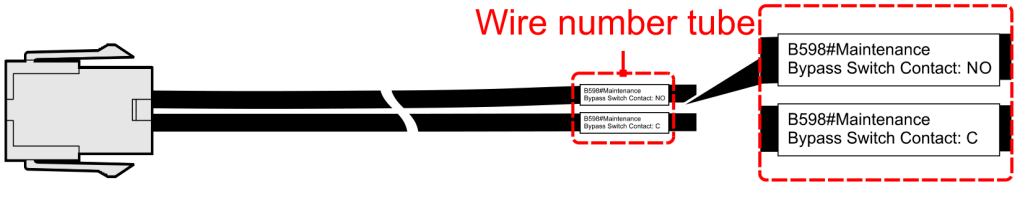

FIGURE 4-68 Maintenance bypass detection wire: connector and markers for the switch auxiliary contact (NO, C)

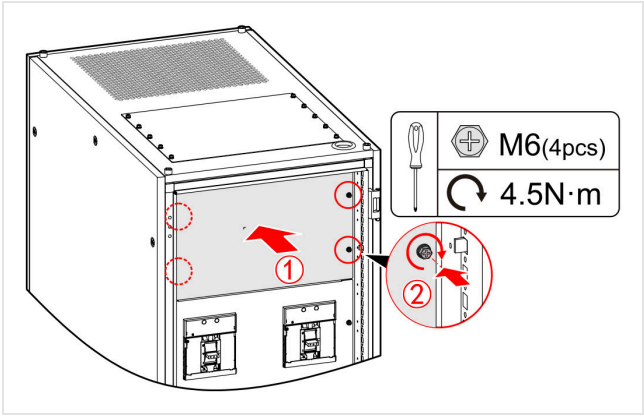

FIGURE 4-69 Refit the upper cover plate

4.8 Installation inspection

TABLE 4-10 Installation checklist

No.	Check	Result
1	The colors of the AC conductors comply with NEC and local codes.	☐ Yes ☐ No
2	No UPS connection is loose.	☐ Yes ☐ No
3	All conductors are firmly connected.	☐ Yes ☐ No
4	The cabinet is well grounded.	☐ Yes ☐ No
5	The polarity and sequence of the battery cables are correct.	☐ Yes ☐ No
6	The cable labels are correct.	☐ Yes ☐ No
7	The cables are neat and tied as specified.	☐ Yes ☐ No
8	Installation and wiring leave room for future changes, expansion and maintenance.	☐ Yes ☐ No
9	No foreign objects in the cabinet: behind the modules, on top of the cabinet, at the terminals and switches.	☐ Yes ☐ No
10	The cabinet stands firm and stable.	☐ Yes ☐ No

CHAPTER 5

05 Operation

Starting and stopping a single UPS, a parallel system and a BSC system, the battery cold start and the emergency power off (EPO).

⚠ WARNING

Only trained personnel operate the switches. The start-up password and the settings marked “AEC service” are reserved to AEC service — call +1 786 553 2100.

5.1 Single UPS

5.1.1 Checks before power-on

TABLE 5-1 Checks before power-on — single UPS

No.	Check	Result
1	The utility, bypass and output switches of the UPS and the external battery switch are OFF (Figure 4-36).	☐ Normal ☐ Abnormal
2	Load type, state and size: the load is not inductive — no motors, fans or air conditioners fed directly; the load is switched off; the total load does not exceed the UPS rating, or the overload protection will trip.	☐ Normal ☐ Abnormal
3	No short circuit between line conductors, or between a line conductor and ground, at the UPS input. No short circuit at the UPS output.	☐ Normal ☐ Abnormal
4	Measure the AC voltage at the utility input terminals with a multimeter: 336 to 552 V line to line. Otherwise the UPS can only start from the battery.	☐ Normal ☐ Abnormal
5	Measure the frequency at the utility input terminals: 40 to 70 Hz. Otherwise the UPS can only start from the battery.	☐ Normal ☐ Abnormal
6	Measure the DC voltage at the battery input terminals: above 11.5 V × the number of 12 V blocks (for example above 460 V for 40 blocks). Check the polarity.	☐ Normal ☐ Abnormal
7	The auxiliary contact of the battery switch is wired to an input dry contact of the system monitoring card, and that input is set in **Setting manage › Dry contact › Input** (Section 6.5.7).	☐ Normal ☐ Abnormal

5.1.2 Start the UPS

1. Set the ready switches of the bypass module and of every power module to **locked** (red) (Figure 2-9, item 5).
2. Close the **bypass switch**, the **utility (input) switch** and the **external battery switch**, in this order (Figure 5-1). You see: the touchscreen starts and the UPS feeds its output terminals through the bypass. The output switch stays OFF.
3. Enter the start-up password. On the main page touch the **Current fault** icon and check that there is no fault (Figure 6-2, item 5). If there is one, stop and call AEC service.
4. Wait until the RUN indicators of all power modules flash slowly green.
5. Start the inverter: hold the **ON** key pair on the operation panel for 3 s (Figure 2-5, item 7) — or touch the **Inverter ON/OFF** icon, then **Single ON** (Figure 5-3). You see: the DC/AC indicator turns green; after about 10 s the bypass indicator goes off and the main page shows **Inverter output** (Figure 6-6).
6. Close the **output switch** (Figure 5-2). At commissioning, check on **Output info** and with a meter that the output voltage between L1, L2 and L3 is within ±2 V and the frequency within ±0.1 Hz of the set values.

7 Switch on the loads, the largest first, then the smaller ones.

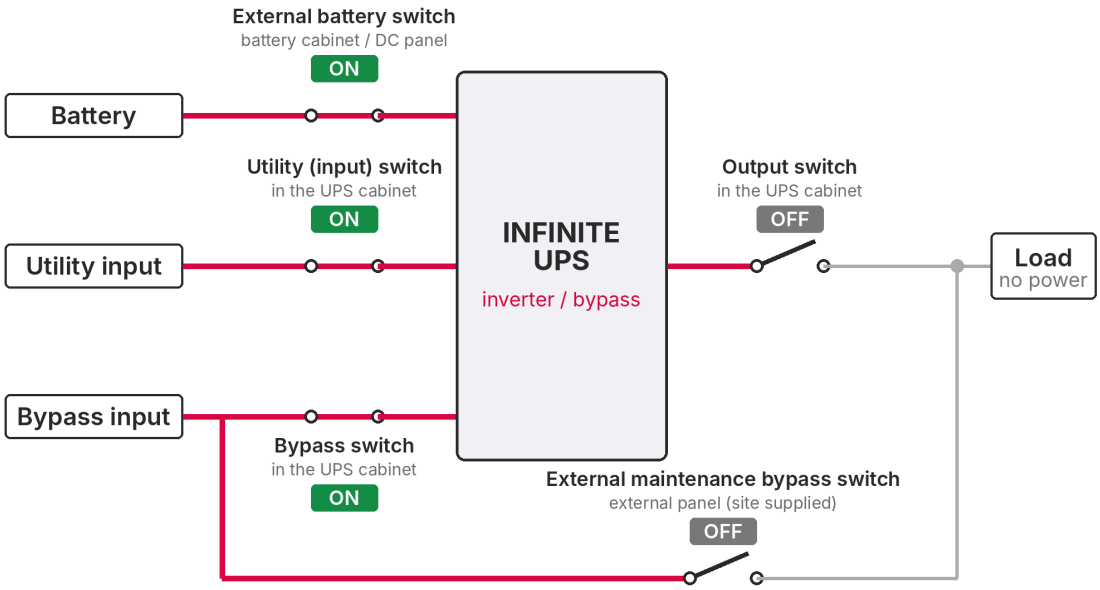

FIGURE 5-1 Start, step 2: bypass, utility and battery switches ON, output switch OFF

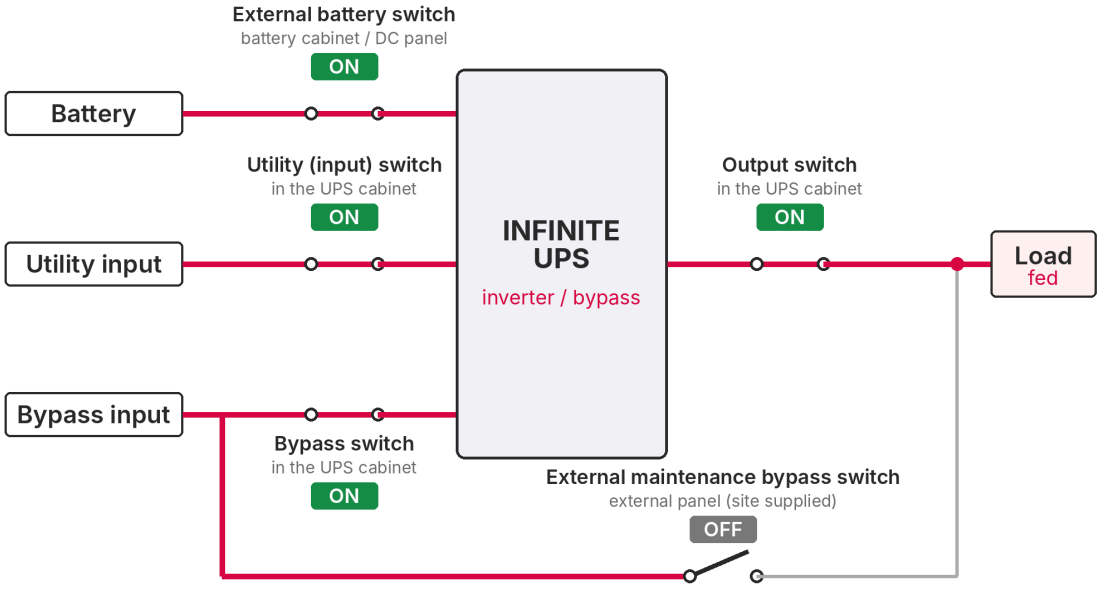

FIGURE 5-2 Start, step 6: output switch ON — normal operation

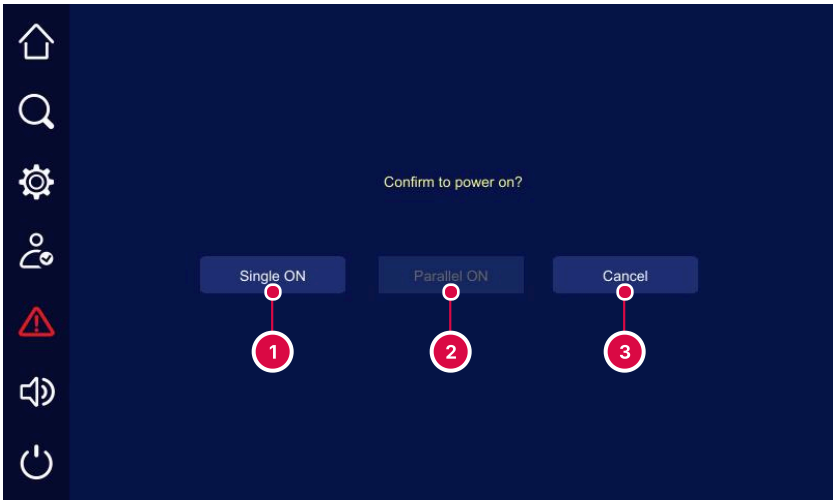

1. Single ON — single UPS
2. Parallel ON — parallel system (grey on a single UPS)
3. Cancel

FIGURE 5-3 Inverter startup page: Single ON (single UPS) or Parallel ON (parallel system)

5.1.3 Battery cold start (no utility)

1. Set the ready switches of the bypass module and of every power module to **locked**.
2. Close **only** the external battery switch (Figure 5-4).
3. Hold the **battery cold-start button** (Figure 2-6, item 7) for more than 3 s. You see: the touchscreen starts. The main page shows **OFF** (no bypass).
4. Continue with Section 5.1.2 from step 3. The UPS then runs on battery (**Battery inverter output**); close the output switch and switch on the loads.

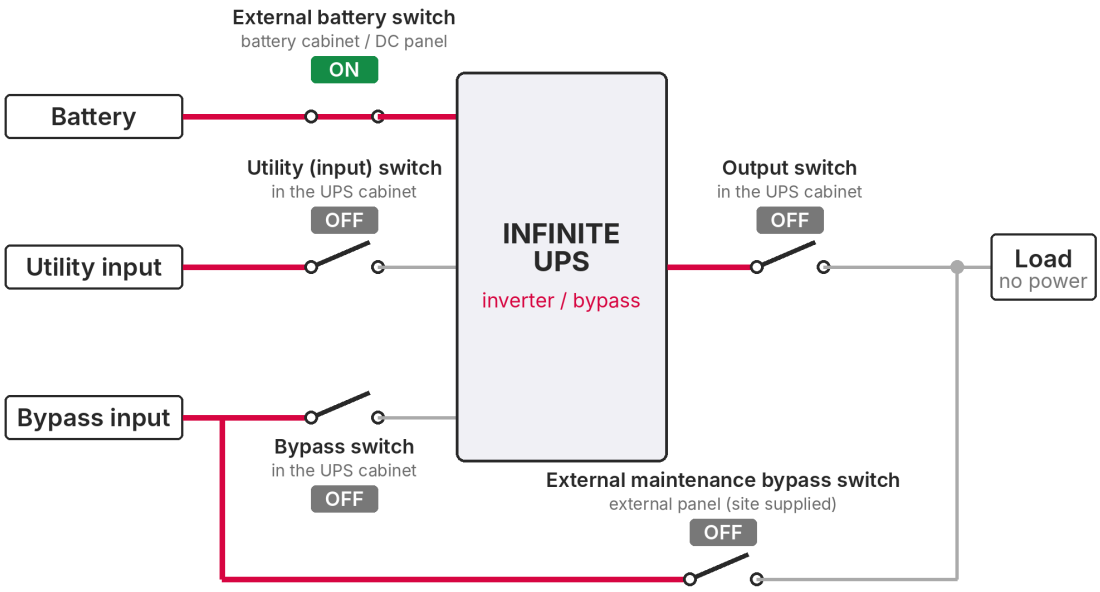

FIGURE 5-4 Cold start: only the external battery switch ON

NOTICE

On battery the runtime is limited. Watch the remaining time on **Battery info** (Section 6.3).

5.1.4 Shut down the UPS

CAUTION

With a normal bypass, the load stays on the bypass when the inverter stops. With an abnormal bypass, the output goes off. Switch the loads off first.

1. Switch off the loads.
2. Stop the inverter: hold the **OFF** key pair for 3 s — or touch the **Inverter ON/OFF** icon, then **Single OFF** (or **Parallel OFF**) (Figure 5-5). You see: the DC/AC indicator goes off and the bypass indicator turns green: bypass output.
3. To power the UPS down completely, open the **external battery switch**, the **utility switch**, the **bypass switch** and the **output switch**, in this order (Figure 4-36). You see: the touchscreen and all indicators go off.

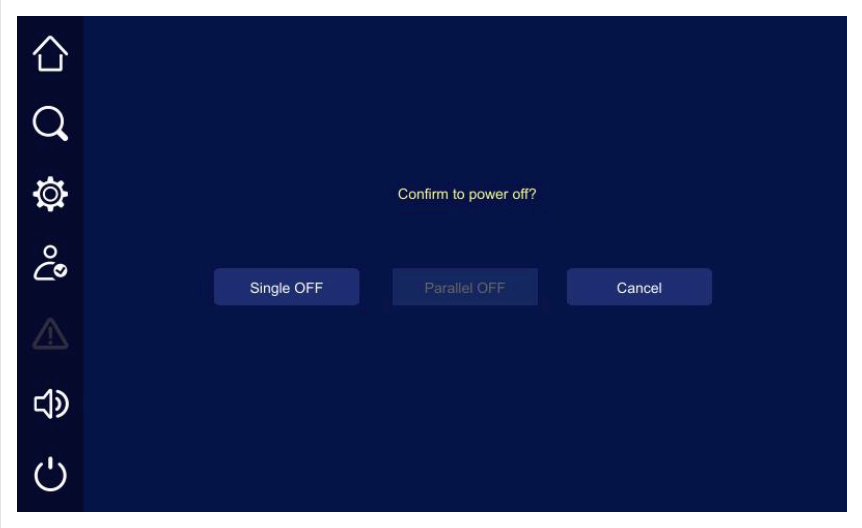

FIGURE 5-5 Inverter shutdown page: Single OFF or Parallel OFF

DANGER

Dangerous voltage stays inside after shutdown. Wait 10–15 minutes and check with a meter before you open covers (Section 1.5).

5.1.5 Emergency power off (EPO)

CAUTION

Use EPO only in an emergency: the output goes off at once and the load loses power.

Trigger the EPO in one of two ways:

- turn the **EPO key switch** (EPO1, Figure 2-6, item 6) from EPO OFF to EPO ON, or
- open the **EPO2** loop (NC–COM) of the system monitoring card with the remote EPO button (Table 2-5).

You see: the touchscreen shows “EPO protection” and the buzzer sounds continuously. The UPS has no output.

5.1.6 Clear the EPO state

1. Return EPO1 and EPO2 to normal: key to EPO OFF; EPO2 loop closed.
2. Open the external battery switch, the utility switch, the bypass switch and the output switch, one by one (Figure 4-36).
3. Wait until the touchscreen and the indicators are off.
4. Start the UPS again (Section 5.1.2).

5.2 Parallel system

5.2.1 Checks before power-on

TABLE 5-2 Checks before power-on — parallel system

No.	Check	Result
1	The utility, bypass and output switches of every UPS and all external battery switches are OFF.	☐ Normal ☐ Abnormal
2	Load type, state and size: no inductive loads fed directly; the load is switched off (the external load output switch is OFF); the load does not exceed the rating of the system.	☐ Normal ☐ Abnormal
3	No short circuit between line conductors, or between a line conductor and ground, at the input of each UPS. No short circuit at the output of each UPS.	☐ Normal ☐ Abnormal
4	Utility input voltage of each UPS 336 to 552 V line to line. Otherwise each UPS can only start from the battery.	☐ Normal ☐ Abnormal
5	Utility input frequency of each UPS 40 to 70 Hz.	☐ Normal ☐ Abnormal
6	Battery voltage at the external battery switch of each UPS above 11.5 V × the number of blocks, correct polarity. With several battery strings, measure at each string switch, then at the main switch between the strings and the UPS.	☐ Normal ☐ Abnormal
7	The auxiliary contact of the battery breaker of each UPS is wired to an input dry contact of its system monitoring card and set in **Setting manage › Dry contact › Input**.	☐ Normal ☐ Abnormal

5.2.2 Start the parallel system

> ⚠ ***CAUTION***
>
> Keep the output switch of every UPS **open** until step 10. Closing them earlier can cause circulating currents between units with different output voltages and damage the equipment.

1. Check that the parallel / BSC kit and the parallel cables are installed (Section 4.6.4).
2. Set the ready switches of the bypass module and of all power modules of every UPS to **locked**.
3. Close the **utility switch** and the **bypass switch** of each UPS, one UPS at a time. Each touchscreen starts. Enter the start-up password on each touchscreen.
4. On each UPS check **Setting manage › Cabinet setting › Mode manage** (Figure 5-6): **Parallel mode** = Parallel, and a different **Parallel address** on every UPS (1, 2, 3 ...). Each number is used once. AEC service sets these values.
5. Close the **external battery switch** of each UPS (several battery strings: the switch of each string first, then the main switch to the UPS). Within 2 minutes the “Battery circuit abnormal” alarm disappears on every touchscreen.
6. On each UPS touch **Current fault** and check that there is no fault. If there is one, stop and call AEC service.

7. With all UPS in bypass output and no alarm, start the inverters of all UPS (Section 5.1.2, step 5). All UPS go to inverter output.
8. Measure each UPS: on **Output info** and with a meter, the output voltage between L1, L2 and L3 is within ±2 V and the frequency within ±0.1 Hz of the set values. Write down the L1-L2, L2-L3 and L3-L1 voltages of every UPS.
9. Compare the UPS: the difference between any two UPS must be below 5 V on every line-to-line voltage. A UPS outside this limit must not join the system: it needs a single-unit retest — call AEC service.
10. Stop the inverters of all UPS (Section 5.1.4, step 2): all go to bypass output.
11. Check the bypass phase sequence. With the external load output switch open, close the output switch of the UPS with parallel address 1 only. Set the multimeter to AC volts. On the UPS with address 2, measure across its open output switch, line side to load side, on L1, then L2, then L3. Every phase must read below 5 V. Repeat on each other UPS without touching the switches. A phase above 5 V means a wrong phase sequence: power the system down and check the bypass input and output wiring of that UPS.
12. With no alarm on any UPS, close the output switches of all UPS, one by one.
13. Start the inverters of all UPS, then stop them again: all units go back to bypass.
14. Close the external load output switch: the system feeds the load through the bypass.
15. With all UPS in bypass and no alarm, start the inverters of all UPS: the system runs in parallel inverter mode.

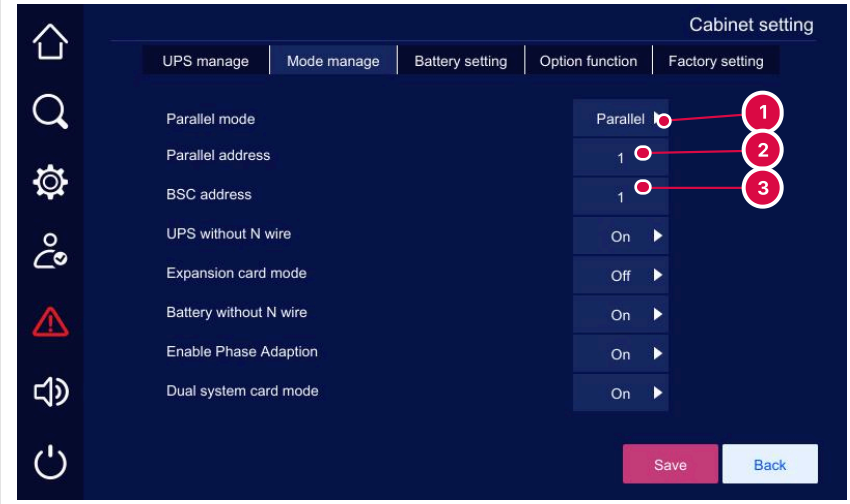

1. Parallel mode: Single, Parallel or BSC
2. Parallel address: different on every UPS (1, 2, 3 ...)
3. BSC address: bus number in a BSC system

FIGURE 5-6 Cabinet setting › Mode manage on a parallel UPS: Parallel mode = Parallel, Parallel address

5.2.3 Shut down the parallel system

> ⚠ ***CAUTION***
>
> With a normal bypass the load stays on the bypass when the inverters stop; with an abnormal bypass the output goes off. Switch the loads off first, and make sure they can stand a power cut.

1. Switch off all loads and let the system run with no load for a while to cool down.

2. Stop the inverters of all UPS (Section 5.1.4, step 2): every UPS goes to bypass. To keep the load on bypass without a break, stop here.
3. To power down completely, open on each UPS the external battery switch, the utility switch, the bypass switch, then the external load output switch and the output switch, in this order. Wait until the touchscreens and indicators are off.

i NOTE To take a UPS out of parallel mode: stop the inverters (step 2) so that the system runs on bypass, then disconnect the parallel cables.

5.2.4 EPO in a parallel system

⚠ CAUTION

Use EPO only in an emergency. How to trigger it: Section 5.1.5.

i NOTE **EPO linkage** (**Setting manage › Smart mode › Other modes**, Table 6-19) decides what an EPO does in a parallel system. On: an EPO on any UPS shuts down the whole system and all outputs go off. Off: only the output of the UPS whose EPO was triggered goes off. AEC service sets this function.

To clear the EPO state:

1. Return EPO1 and EPO2 of every system monitoring card to normal.
2. On each UPS open the external battery switch, the utility switch, the bypass switch and the output switch, until all touchscreens and indicators are off.
3. Start the parallel system again (Section 5.2.2).

5.3 BSC system

A BSC (dual-bus) system is operated like a parallel system (Section 5.2); only the BSC settings differ.

i NOTE On each UPS check **Setting manage › Cabinet setting › Mode manage** (Figure 5-7): **Parallel mode** = BSC, and **BSC address** = the bus of that UPS: 1 for the UPS on bus 1, 2 for bus 2, and so on. The bus of each UPS must match its setting. AEC service sets these values.

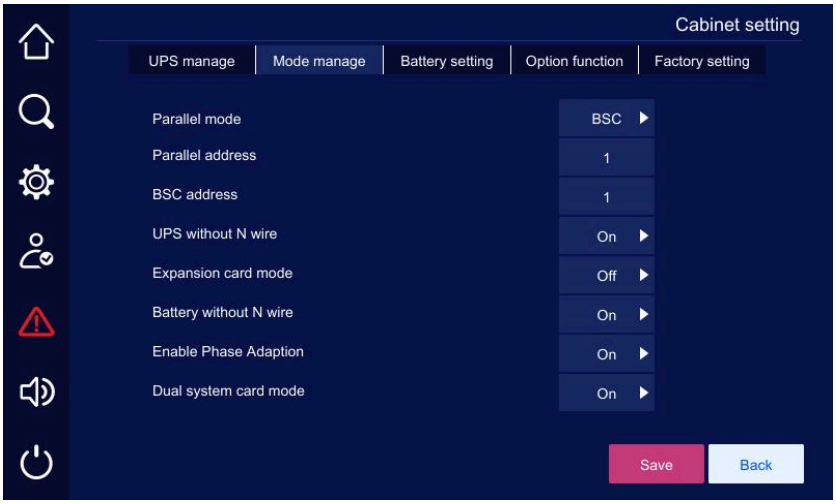

FIGURE 5-7 Mode manage on a BSC system: Parallel mode = BSC, BSC address = bus number

06

CHAPTER 6

The touchscreen

The pages of the 7-inch color touchscreen: the menu tree, the main page and its icons, the operating states, the measurements, the records and every setting.

i NOTE The values in the pictures of this chapter are examples. Your touchscreen shows the real values of your UPS.

⚠ *WARNING*

The touchscreen holds parameters that control the UPS. Only authorized professionals change them. If a parameter is not clear, read this manual or ask AEC service; do not change it on a guess. Most settings are view-only for the user and are set by AEC service.

6.1 Menu tree

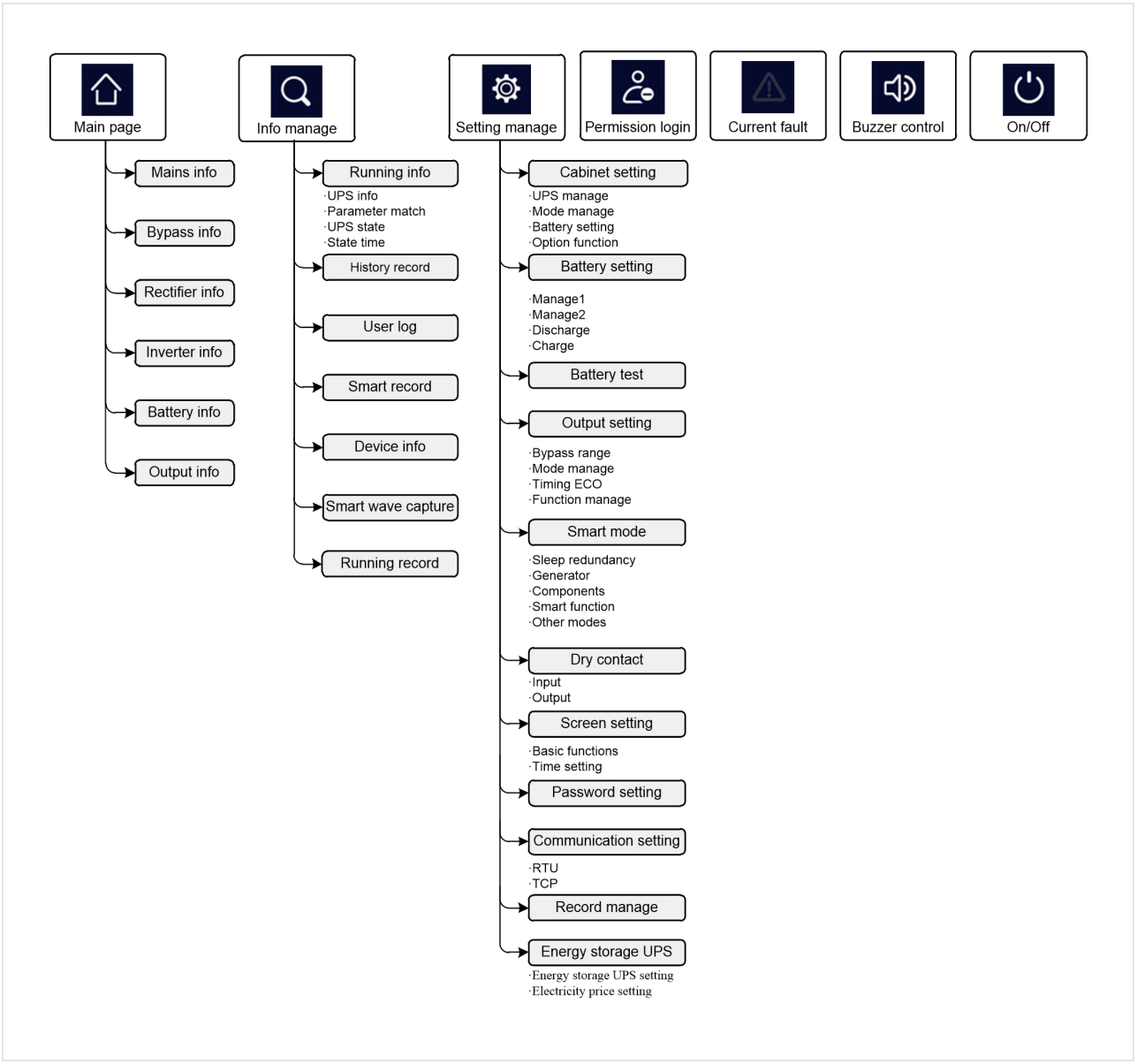

FIGURE 6-1 Touchscreen menu tree

6.2 Main page

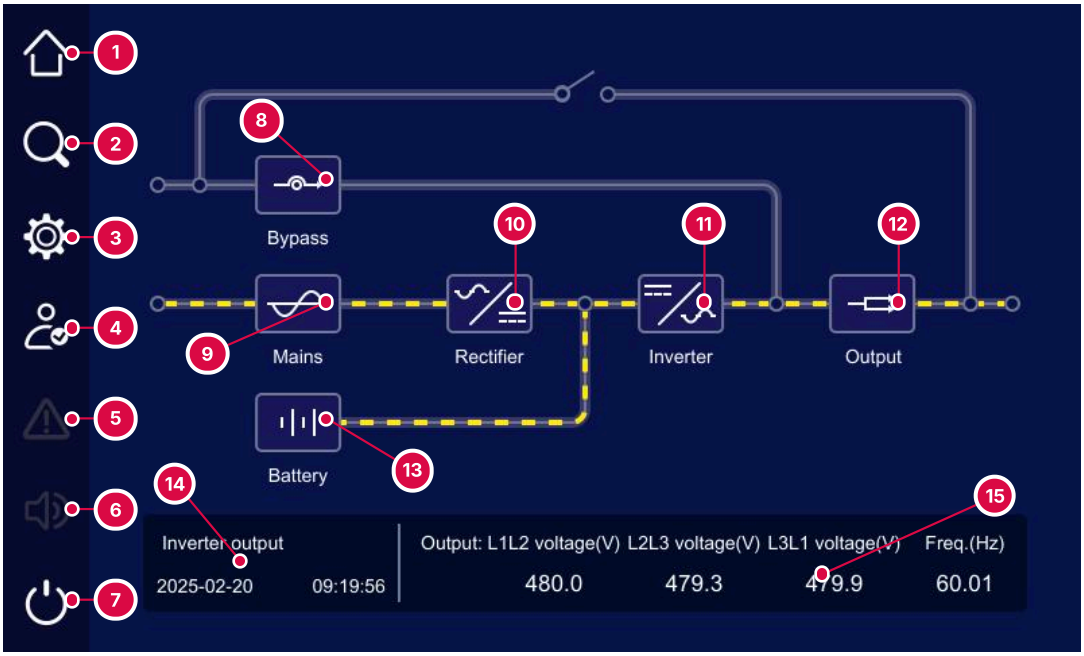

1. Main page
2. Info manage (Section 6.4)
3. Setting manage (Section 6.5)
4. Login
5. Current fault: red when a fault is present
6. Buzzer on / off (Section 6.2.2)
7. Inverter ON / OFF (Section 6.6)
8. Bypass: tap for the bypass readings
9. Utility (shown as “Mains”): tap for the utility readings
10. Rectifier: readings of each module
11. Inverter: readings of each module
12. Output: output readings
13. Battery: battery readings
14. State bar: UPS state, date and time
15. Output line voltages and frequency

FIGURE 6-2 Main page — menu bar (left), power flow (center), state bar (bottom)

The yellow dashed line shows the path of the power: here utility → rectifier → inverter → output, with the battery on charge. When an input or the output is abnormal, its icon flashes red; tap it to read its values. Before you open the settings, log in with the **Login** icon (item 4).

6.2.1 Operating states

The state bar shows one of these states: fault protection, OFF, bypass output, battery inverter output, utility inverter output (shown as “Mains inverter output”), grid-tied self-load, ECO output, WECO output, frequency converter output, maintenance bypass output.

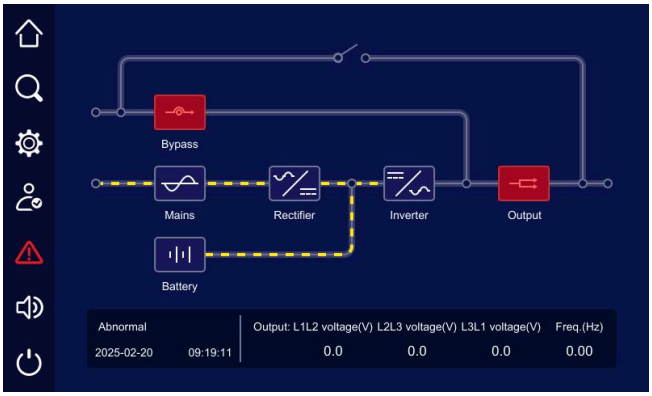

FIGURE 6-3 Fault protection: no output; the fault icon is red

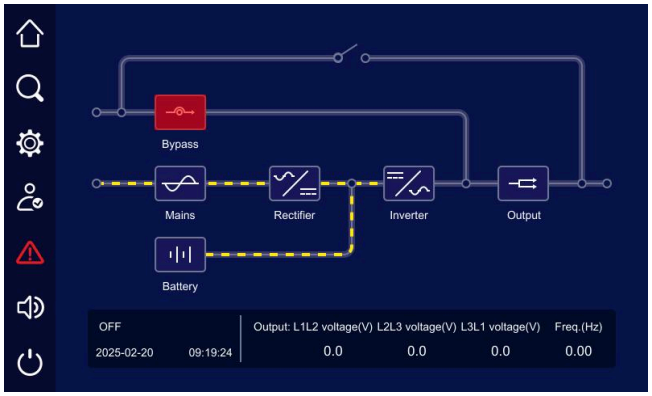

FIGURE 6-4 OFF: inverter off and no bypass — no output

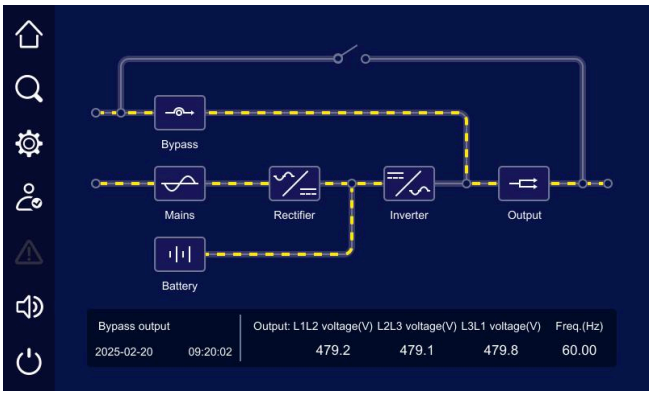

FIGURE 6-5 Bypass output: the load is on the bypass, not protected

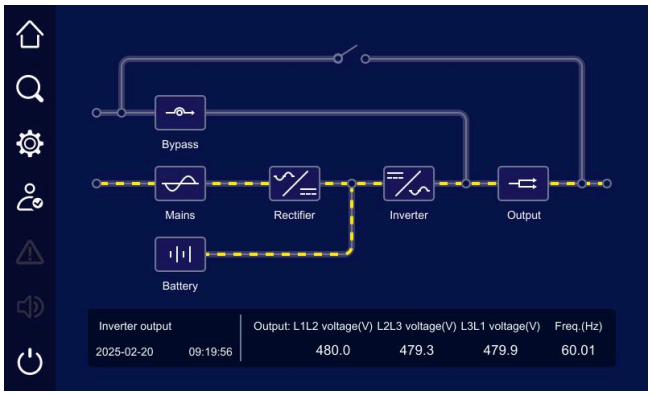

FIGURE 6-6 Mains inverter output: normal operation

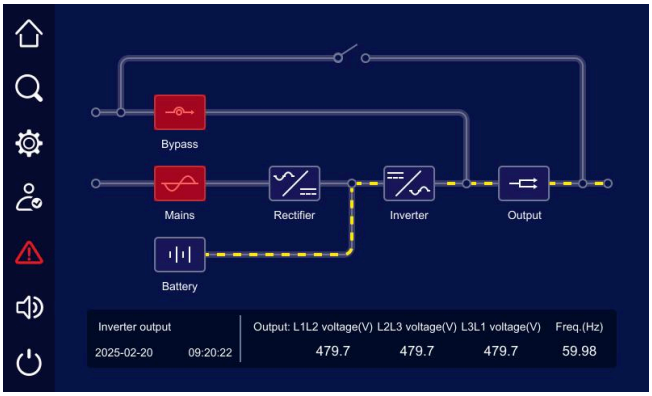

FIGURE 6-7 Battery inverter output: utility failed, the battery feeds the load

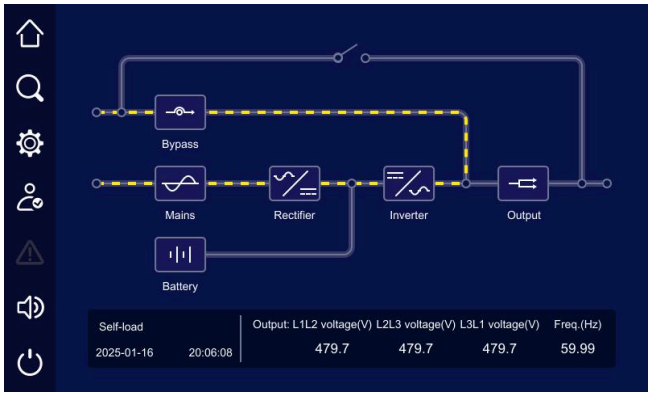

FIGURE 6-8 Grid-tied self-load: factory burn-in mode only

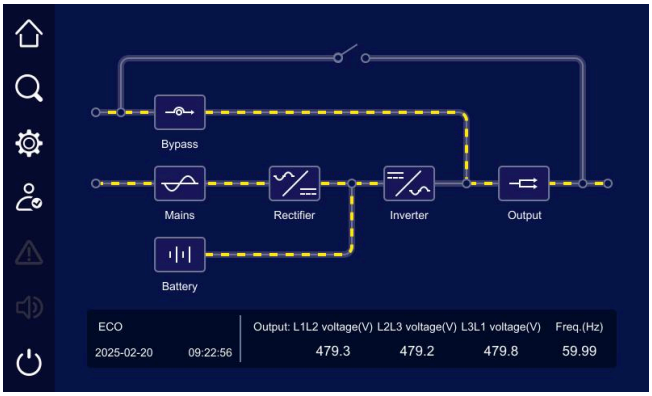

FIGURE 6-9 ECO output: load on the bypass, inverter ready

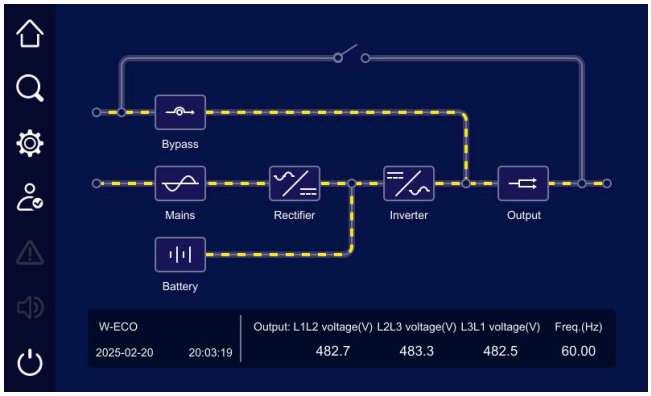

FIGURE 6-10 WECO output: load on the bypass, modules compensate harmonics

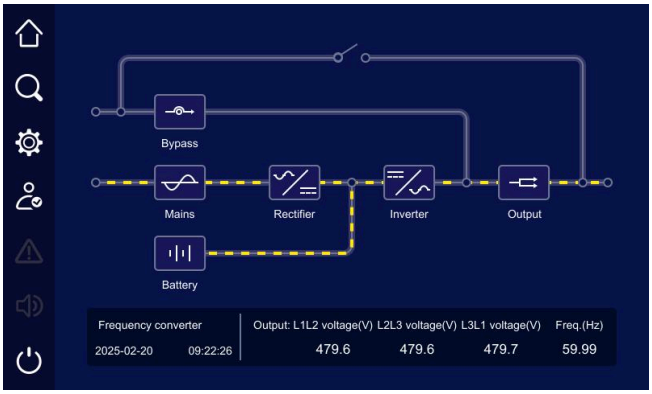

FIGURE 6-11 Frequency converter output: no bypass

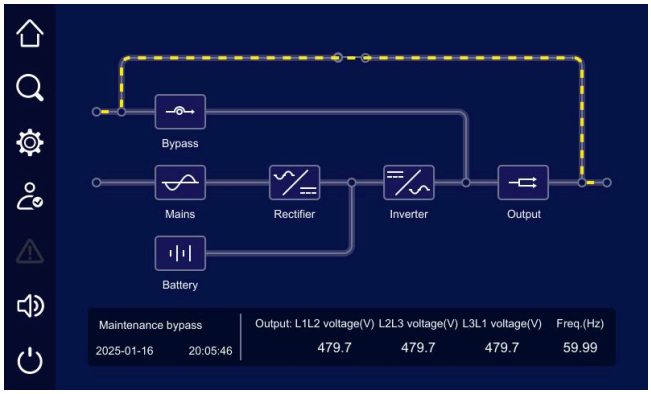

FIGURE 6-12 Maintenance bypass output: the external maintenance bypass feeds the load

When a module or the system is abnormal, the **Current fault** icon turns red. Tap it to see the faults present now, with date and time (Figure 6-13). The alarms are explained in Section 2.11.



FIGURE 6-13 Current fault list

6.2.2 Buzzer

When a module or the system is abnormal, the buzzer sounds. Tap the **Buzzer** icon to silence it or turn it back on. A silenced buzzer sounds again if a new fault occurs.

> **i NOTE** A continuous beep cannot be silenced from the icon: it stops only when the cause of the fault is removed. The faults that give a continuous beep are listed in Section 2.11.

6.3 Measurements

> **i NOTE** Log in before you query the system or change settings: tap **Login**, enter the account and password, then go on.

Tap a block of the power flow on the main page to open its page.

TABLE 6-1 Measurement pages

Page	What it shows
Mains info	Utility phase voltage, line voltage, current and frequency. On a 3-wire supply the phase (L–N) voltages show "--".
Bypass info	Bypass phase voltage, line voltage, current and frequency.
Battery info	Battery voltage, discharge current, charge current, remaining capacity, remaining time, temperature and state (floating charge, equalized charge, discharge, sleep ...).
Rectifier info	The input side of each power module; **Module-n** picks the module.
Inverter info	The output side of each power module: voltage, current, active and apparent power, load rate, frequency. The modules should share the load evenly.
Output info	Output phase and line voltage, current, active, reactive and apparent power, load rate, power factor and frequency.

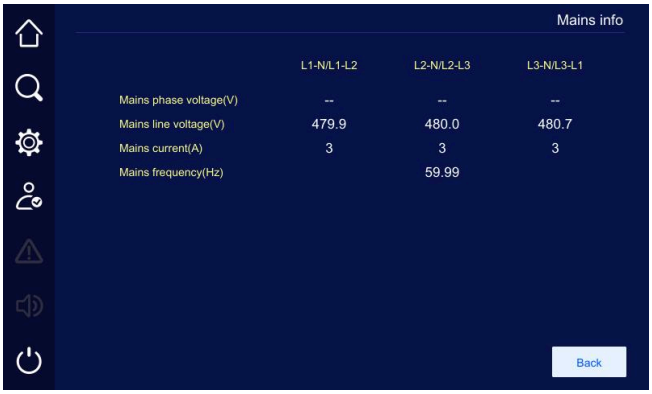

FIGURE 6-14 Mains info

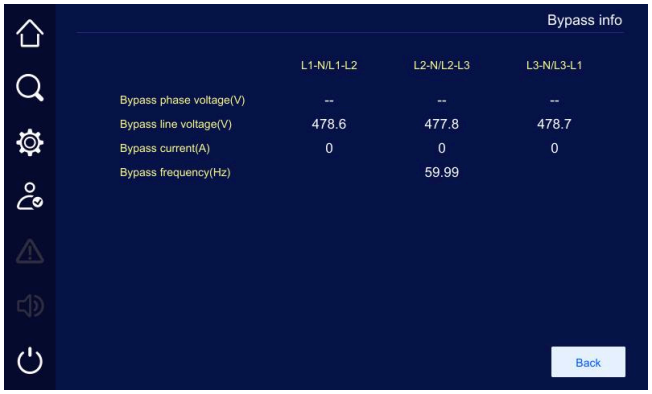

FIGURE 6-15 Bypass info

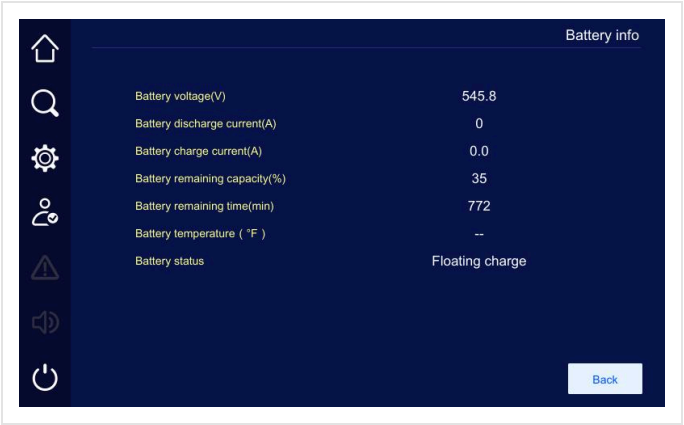

FIGURE 6-16 Battery info

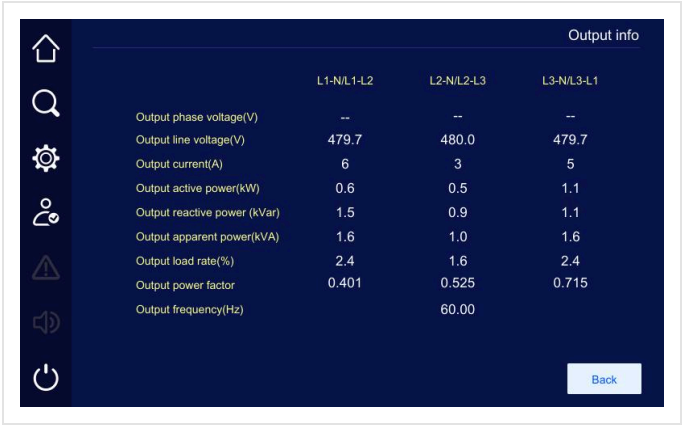

FIGURE 6-17 Output info

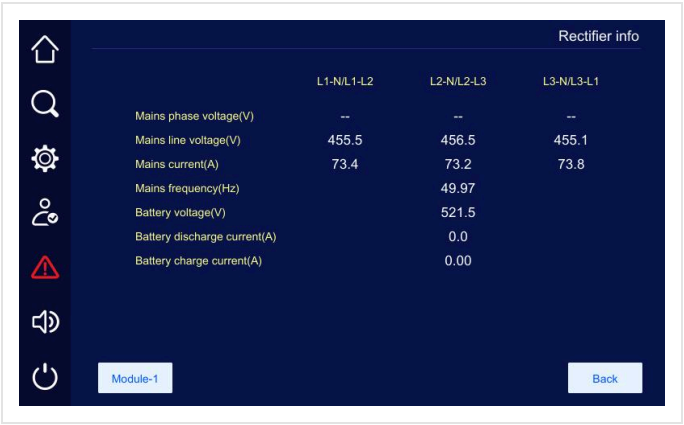

FIGURE 6-18 Rectifier info (per module)

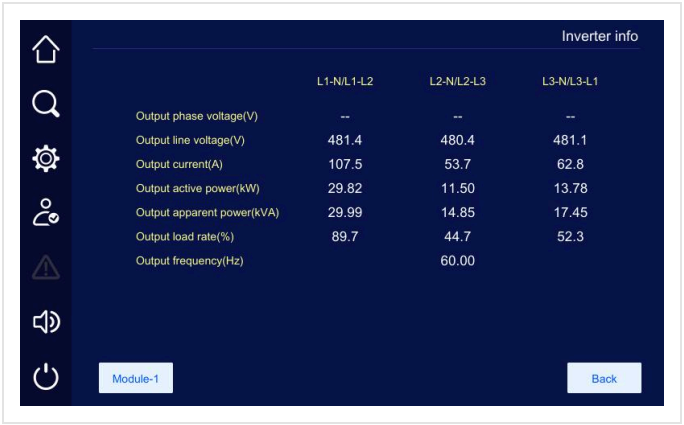

FIGURE 6-19 Inverter info (per module)

6.4 Info manage

Tap the **Info manage** icon. The page holds running info, history record, user log, smart record, device info, smart wave capture and running record.

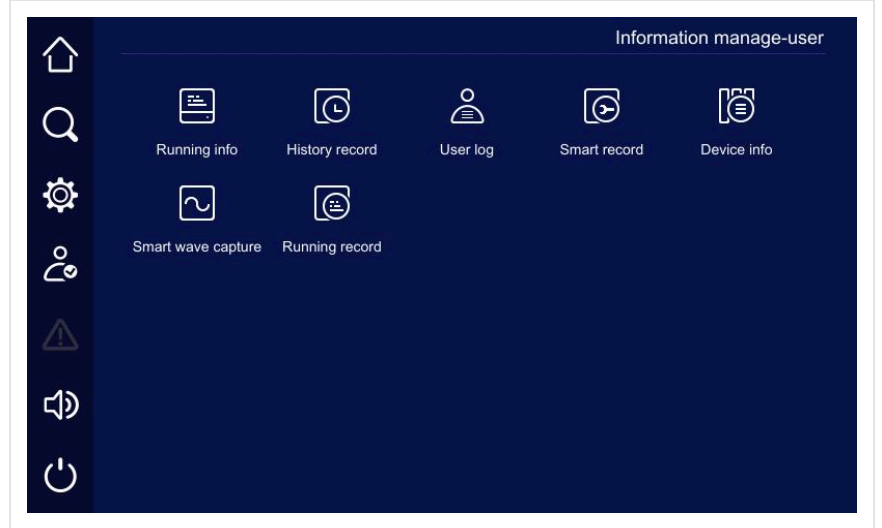

FIGURE 6-20 Info manage page

CAUTION

The UPS keeps up to 10,000 records. Beyond 10,000 the oldest record is overwritten. Records are listed newest first.

TABLE 6-2 Info manage pages

Page	What it shows
Running info	Sampling of the system cards: UPS info, parameter match, UPS status, state time; **System card 1 / 2** switches card.
History record	Faults and alarms of the system and the modules, with date and time; “recover” lines show when an event ended.
User log	Parameter changes and operations (battery tests and results, time changes ...).
Smart record	Repairs and replacements by service personnel (for example a power module replaced, with the new serial number).
Device info	Product name, model, serial number (S/N), protocol version; hardware and software versions of the touchscreen, system cards, expansion card and each power module.
Smart wave capture	Waveforms saved at each fault. Export them (Record manage) and send them with the history to AEC service.
Running record	Input and output voltages and currents over time, at the recording period set in Smart function.

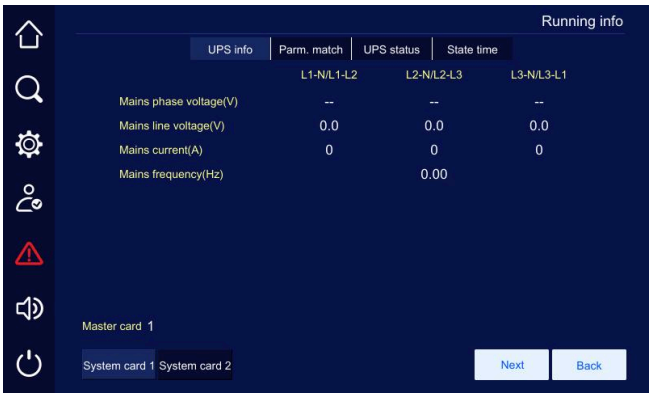

FIGURE 6-21 Running info

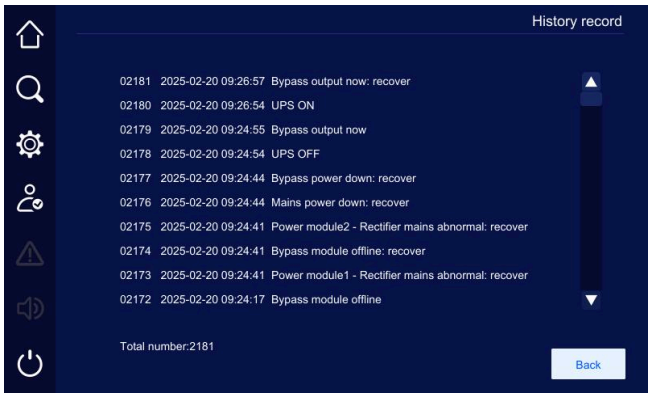

FIGURE 6-22 History record



FIGURE 6-23 User log

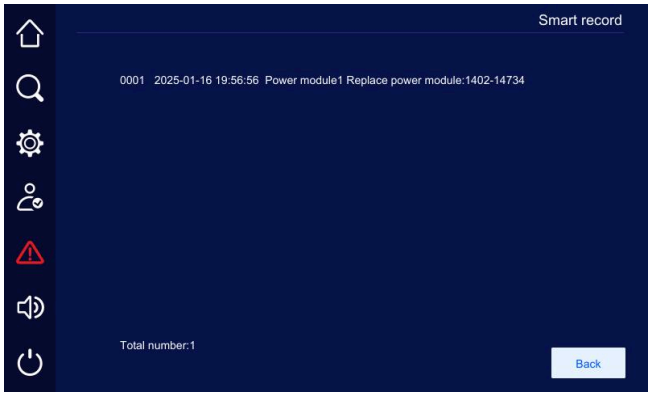

FIGURE 6-24 Smart record

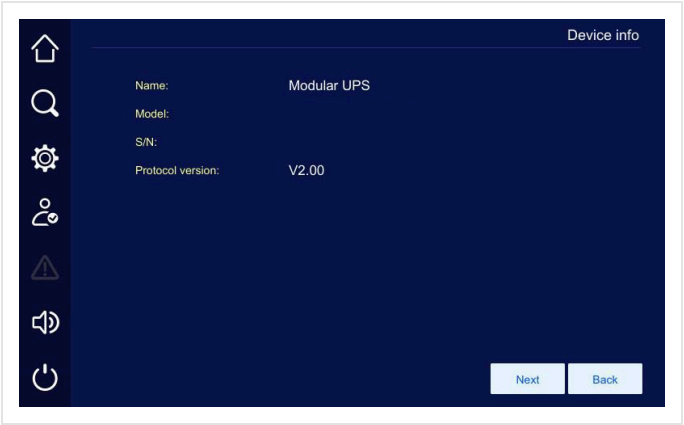

FIGURE 6-25 Device info, page 1: name, model, S/N, protocol version

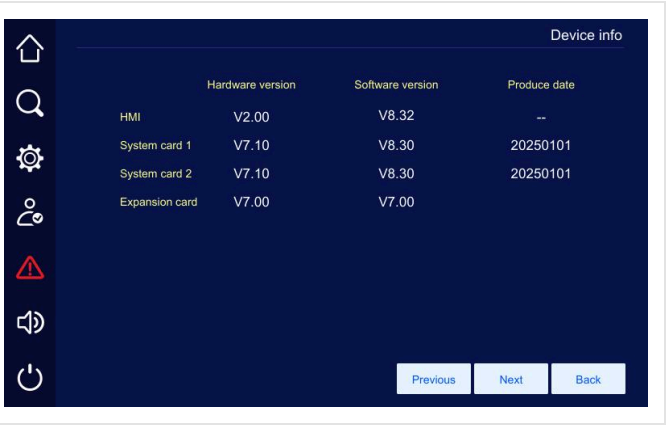

FIGURE 6-26 Device info, page 2: touchscreen, system cards, expansion card

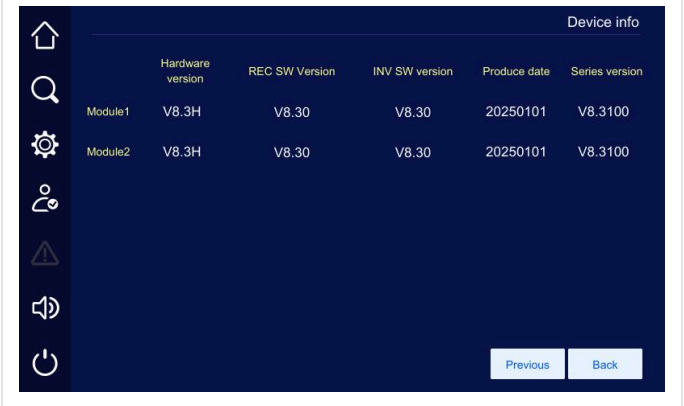

FIGURE 6-27 Device info, page 3: power modules — all must show the same versions

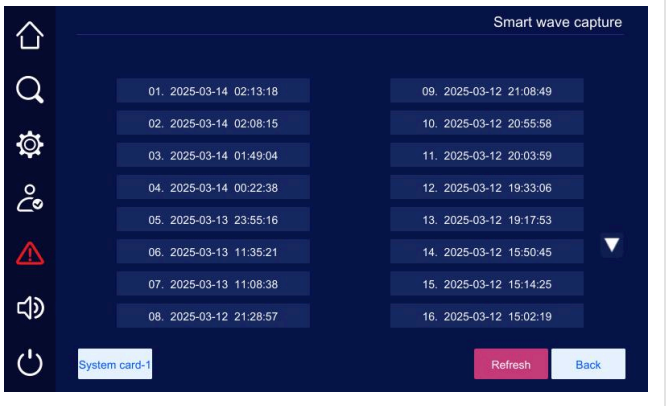

FIGURE 6-28 Smart wave capture list



FIGURE 6-29 Running record

✓ TIP Before you call AEC, note the serial number from **Device info** and the last entries of **History record**, or take photos of both.

6.5 Setting manage

Tap the **Setting manage** icon and log in. The page holds cabinet setting, battery setting, battery test, output setting, smart mode, dry contact, screen setting, password setting, communication setting, record manage and energy storage UPS.

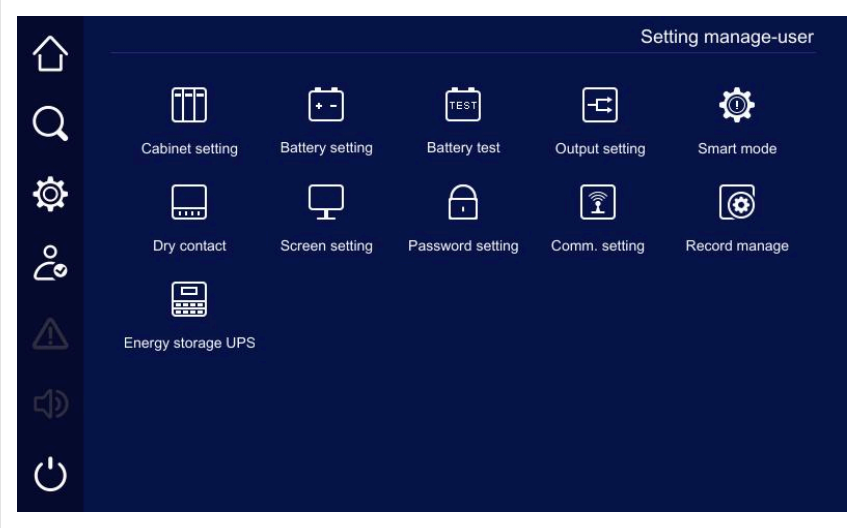

FIGURE 6-30 Setting manage page

> **i NOTE** A grey item cannot be set at your access level. The tables below say which items the user can set; all others are view-only and set by AEC service.

6.5.1 Cabinet setting

All cabinet settings are view-only for the user.

UPS manage

TABLE 6-3 Cabinet setting › UPS manage (view only)

No.	Item	Description
1	UPS voltage	Rated output voltage (480 V)
2	UPS frequency	Rated output frequency (60 Hz)
3	Output PF	Output power factor (0.8 to 1.0)
4	Output voltage fine-tuning	Fine adjustment of the output voltage, −5 to +5 V

Mode manage

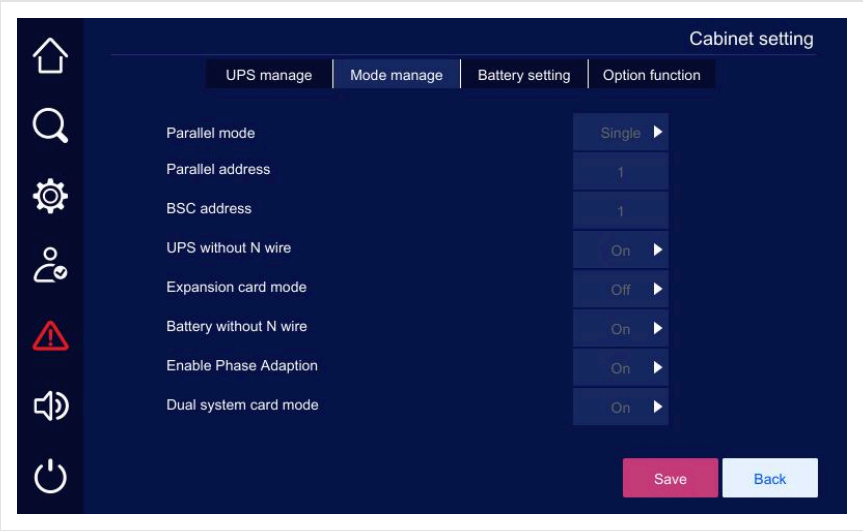

Figure 6-31Cabinet setting › Mode manage

TABLE 6-4 Cabinet setting › Mode manage (view only)

No.	Item	Description
1	Parallel mode	Single, Parallel or BSC.
2	Parallel address	Address of this cabinet in a parallel system.
3	BSC address	Bus of this cabinet in a BSC system.
4	UPS without N wire	On when the utility input has no neutral — the case for INFINITE (3-wire).
5	Expansion card mode	Off, or the card fitted in slot 1 (BMS or dry contact expansion card).
6	Battery without N wire	On when the battery has no neutral (midpoint) connection — the case for INFINITE.
7	Enable phase adaptation	On: the output works even with a reversed utility phase sequence. The bypass does not work with a reversed phase sequence.
8	Dual system card mode	On when the cabinet has two system control cards; detects their redundancy.

Battery setting

TABLE 6-5 Cabinet setting › Battery setting (view only)

No.	Item	Description
1	Battery type	Must match the battery connected (Section 6.5.2).
2	Common battery setting	On when several cabinets of a parallel system share one battery.
3	Battery capacity	Capacity of the battery (Ah); must match the battery.
4	Cell number	Number of cells (total); must match the battery.
5	BMS communication function	On when the expansion card is the BMS card (AEC L6 lithium).
6	Prohibit charge alarm function	On: when charging is prohibited, the fault list shows the alarm.

6.5.2 Battery types

The battery type decides how the battery is connected and set up. AEC service makes these settings at commissioning.

AEC L6 lithium battery cabinets (with BMS).

1. Connect the positive and negative terminals of the L6 cabinet to the battery + and – bus bars of the UPS (Figure 4-52, item 3).
2. Fit the BMS expansion card in slot 1 (Section 4.6.3).
3. Connect an RJ45 cable from the BMS port of the card to the RJ45 BMS port of the L6 cabinet.
4. In **Cabinet setting › Mode manage**, set **Expansion card mode** to BMS and save (Figure 6-32).
5. In **Cabinet setting › Battery setting**, set **Battery type** to the Li-ion (BMS) entry and **BMS communication function** to On (Figure 6-33). The communication link is then made.

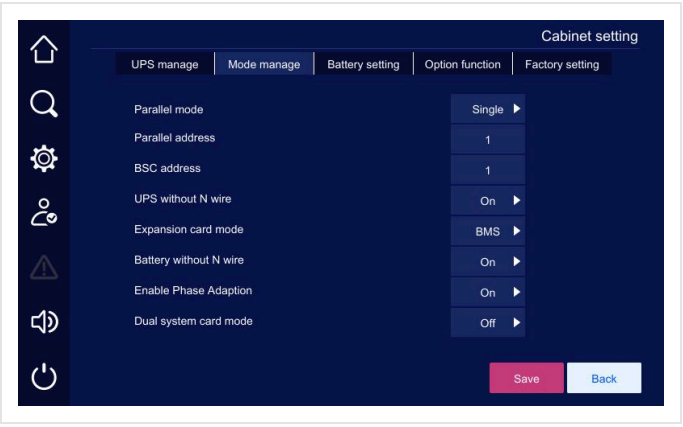

FIGURE 6-32 Mode manage: Expansion card mode = BMS

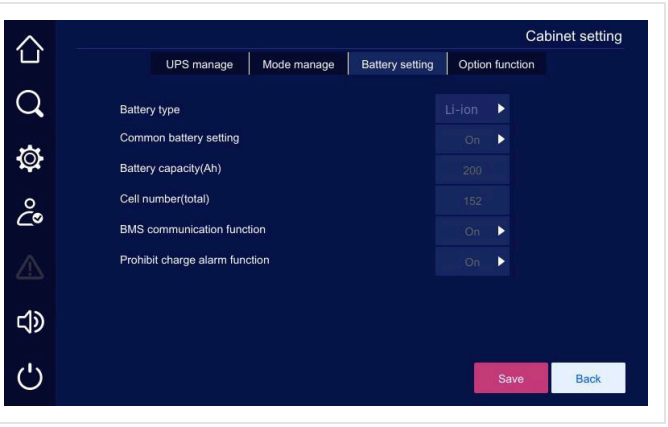

FIGURE 6-33 Battery setting: Li-ion with BMS communication On

Lead-acid batteries and lithium iron phosphate batteries without BMS. Connect the battery + and – to the battery bus bars. In **Cabinet setting › Battery setting** select the lead-acid or lithium iron type; leave **BMS communication function** Off. Set the other values for the battery as installed (Figure 6-34).

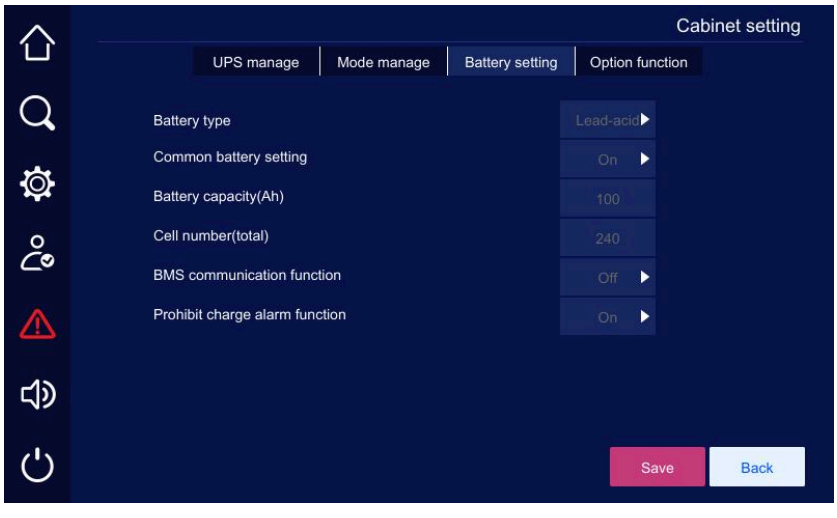

FIGURE 6-34 Battery setting: lead-acid, BMS communication Off

Option function

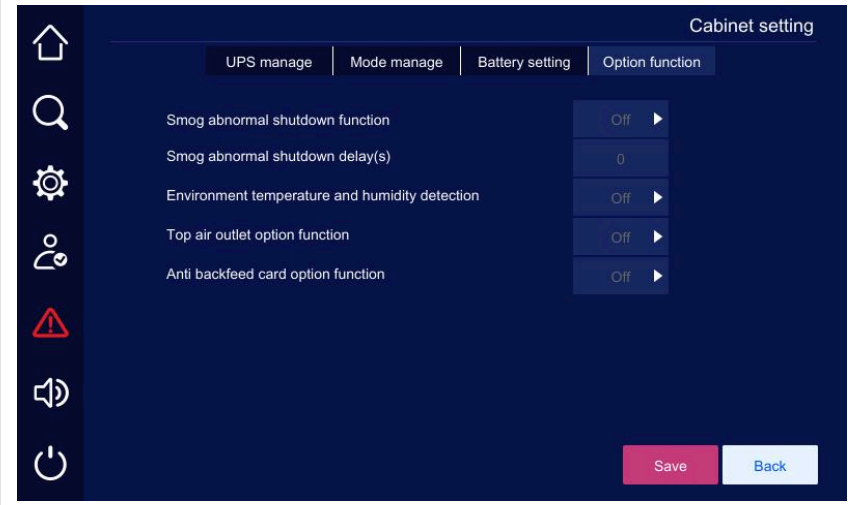

Figure 6-35Cabinet setting › Option function

TABLE 6-6 Cabinet setting › Option function (view only)

No.	Item	Description
1	Smoke abnormal shutdown function	On: when the smoke detector option reports smoke, the UPS shuts down.
2	Smoke abnormal shutdown delay	Delay before the shutdown after smoke is detected.
3	Environmental temperature and humidity detection	On: with the environment sensor option, the room temperature and humidity are monitored.
4	Top air outlet option function	No top air outlet option.
5	Anti-backfeed card option function	No anti-backfeed card option.

6.5.3 Battery setting

Manage 1 — the user can set these values.

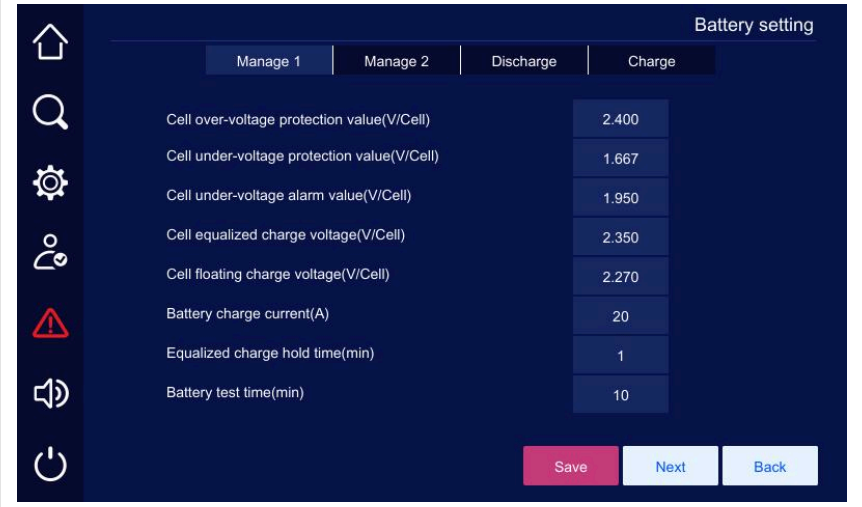

Figure 6-36Battery setting › Manage 1

TABLE 6-7 Battery setting › Manage 1

No.	Item	Description	Range
1	Cell over-voltage protection value	Highest cell voltage; above it the battery protection acts.	2.300 to 2.450 V/cell
2	Cell under-voltage protection value	Lowest cell voltage; below it the battery protection acts.	1.833 to 2.300 V/cell
3	Cell under-voltage alarm value	The battery is nearly exhausted: an alarm warns the user before the protection acts.	2.000 to 2.300 V/cell
4	Cell equalized charge voltage	Charge voltage in equalized charge.	2.300 to 2.400 V/cell (default 2.350)
5	Cell floating charge voltage	Charge voltage in floating charge.	2.167 to 2.300 V/cell, default 2.270 (Table A-6)
6	Battery charge current	Maximum charge current, never above the charger capacity.	5 to 750 A, default 20 A
7	Equalized charge hold time	Longest time in equalized charge.	1 to 720 min, default 30 min
8	Battery test time	Duration of the standard battery test.	1 to 240 min, default 10 min

Next opens the battery cycle test page (Section 7.6.3, Figure 7-8).

Manage 2 — view only.

TABLE 6-8 Battery setting › Manage 2 (view only)

No.	Item	Description
1	Float to sleep function	On: after the set time in floating charge, the battery goes to sleep.
2	Float to sleep time	Time in floating charge before sleep.
3	Sleep wake-up voltage	In sleep, the battery wakes up if its voltage falls below this value.
4	Sleep wake-up time	In sleep, the battery wakes up after this time.
5	Battery temperature detection function	On: with the temperature sensor (Section 2.10.3) the battery temperature is measured.
6	Battery over-temperature alarm value	Above it, an over-temperature alarm is raised.
7	Battery low-temperature alarm value	Below it, a low-temperature alarm is raised.
8	SOH	State of health of the battery.

Discharge — view only.

TABLE 6-9 Battery setting › Discharge (view only)

No.	Item	Description
1	Auto-start when power on	On: if the UPS was in inverter mode when it shut down, it restarts and returns to the inverter when power comes back.
2	Battery level II under-voltage protection	The system shuts down when the battery falls below the second under-voltage point.
3	Cell level II under-voltage protection value	The second under-voltage point.

No.	Item	Description
4	Battery discharge timeout protection function	On: the discharge stops when it lasts longer than the set time.
5	Battery discharge protection time	The time limit for item 4.
6	Battery backup pre-alarm function	On: a warning appears when the remaining runtime is shorter than the set time (“Backup time insufficient”).
7	Battery backup pre-alarm time	The time threshold for item 6.
8	Battery discharge compensation function	Adjusts the under-voltage protection point to the discharge rate.

Charge — only **Forced charge** can be set.

TABLE 6-10 Battery setting › Charge

No.	Item	Description
1	Charge current-limiting coefficient	The charge current does not exceed this coefficient × the battery capacity (Ah): 0.05 C to 0.5 C, default 0.20 C.
2	Temperature compensation coefficient	Corrects the charge voltage for the battery temperature.
3	Timed equalized charge	On: the battery goes from floating to equalized charge at the set interval.
4	Timed equalized charge interval	The interval for item 3.
5	Forced equalized charge	Forces equalized charge from floating charge or sleep.
6	**Forced charge** (user)	Forces equalized charge for up to 10 minutes. On or Off, default Off.
7	Forced charge termination capacity factor	In floating charge, if the energy discharged is below this factor × the capacity (Ah), the battery returns to floating charge after charging resumes.

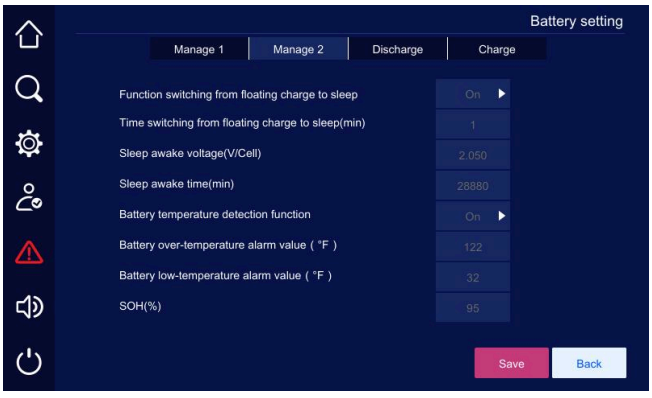

FIGURE 6-37 Battery setting › Manage 2

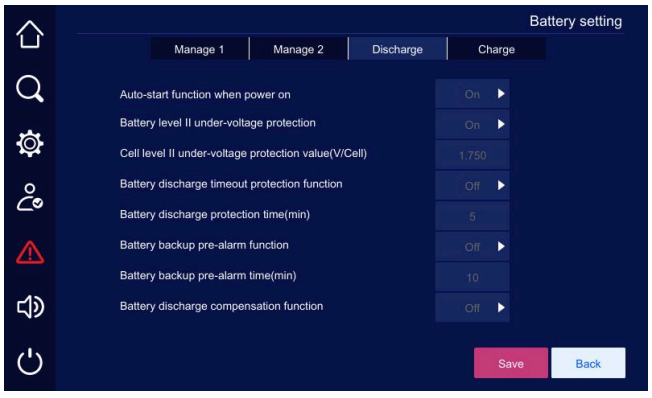

FIGURE 6-38 Battery setting › Discharge

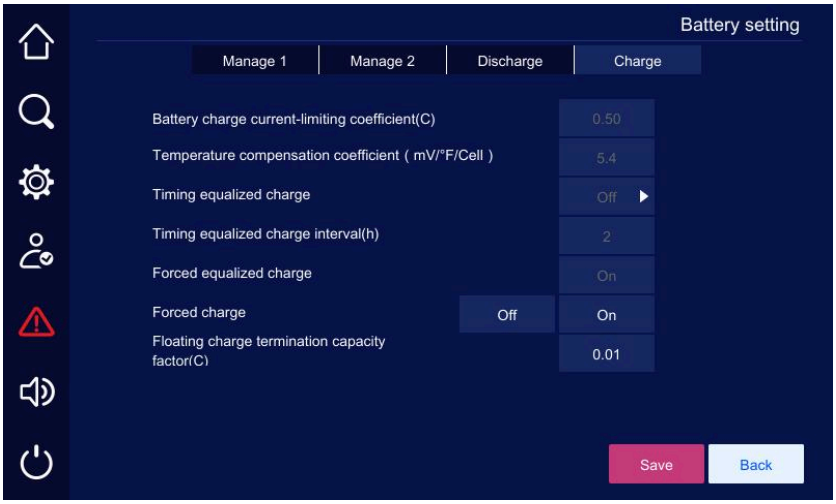

FIGURE 6-39 Battery setting › Charge

6.5.4 Battery test

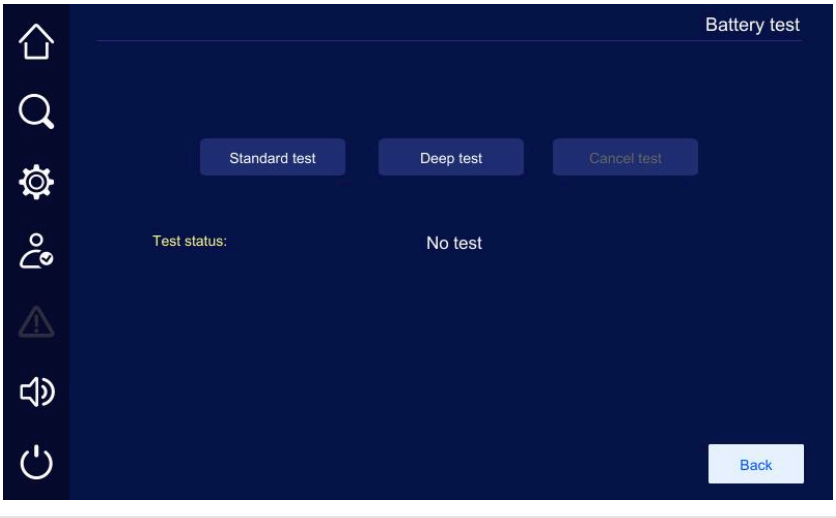

FIGURE 6-40 Battery test page

TABLE 6-11 Battery test

No.	Item	Description
1	Standard test	Shallow discharge for the Battery test time, with the utility present. Checks a battery that has not worked for a long time.
2	Deep test	Discharge to the under-voltage alarm point: a fuller picture of the battery's performance and health.
3	Cancel test	Stops a standard or deep test.

How to run the tests and when they stop by themselves: Section 7.6.

6.5.5 Output setting

Bypass range — the user can set these values.

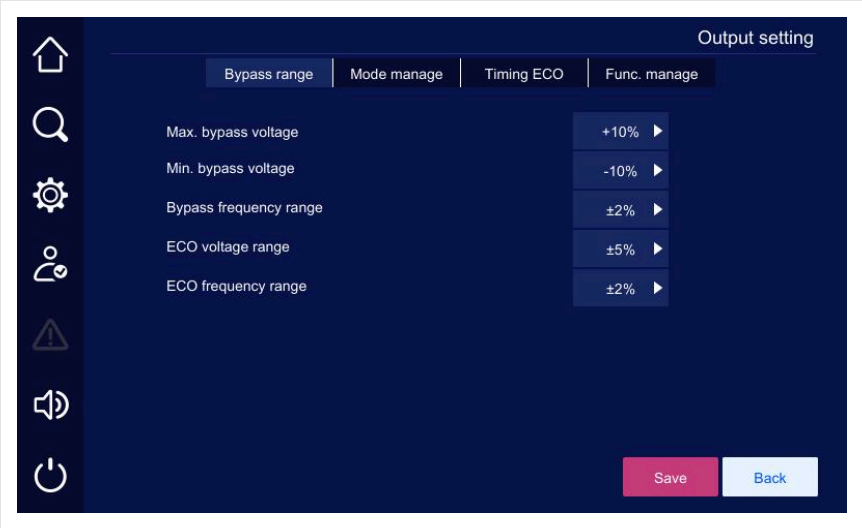

Figure 6-41Output setting › Bypass range

TABLE 6-12 Output setting › Bypass range

No.	Item	Description	Range
1	Max. bypass voltage	Above rated voltage + this value: “Bypass overvoltage”, the bypass is not available.	+10, +15, +20 or +25 %, default +15 %
2	Min. bypass voltage	Below rated voltage – this value: “Bypass under-voltage”, the bypass is not available.	−10, −15, −20 or −30 %, default −20 %
3	Bypass frequency range	Outside rated frequency ± this value: “Bypass over-frequency / under-frequency”, the bypass is not available.	±2, ±4, ±6, ±8, ±10 or ±20 %, default ±10 %
4	ECO voltage range	In ECO mode, outside this window: “ECO overvoltage / under-voltage”, the UPS goes to the inverter.	±5, ±10 or ±15 %, default ±15 %
5	ECO frequency range	In ECO mode, outside this window: “ECO over-frequency / under-frequency”, the UPS goes to the inverter.	±2 or ±4 %, default ±2 %

Mode manage — view only.

TABLE 6-13 Output setting › Mode manage (view only)

No.	Item	Description
1	Standard ECO mode	On: ECO mode — the load on the bypass, the inverter always ready.
2	W-ECO mode	On: WECO mode — the load on the bypass, the inverter compensates harmonics.
3	Frequency converter mode	On: the UPS outputs the set frequency (no bypass).
4	Frequency converter mode battery alarm enabled	Suppresses the battery alarms in frequency converter mode.
5	Frequency converter output frequency	The output frequency in frequency converter mode.
6	Self-load mode	Feeds the output back to the utility for low-loss burn-in (factory use).

No.	Item	Description
7	Self-load time	Running time in self-load mode.
8	Load capacity in self-load mode	Load level in self-load mode.

Timed ECO — view only.

TABLE 6-14 Output setting › Timed ECO (view only)

No.	Item	Description
1	ECO timing mode	On: ECO is switched on automatically in the set period.
2	ECO on / off	Start and end time of timed ECO (hours, minutes, seconds).
3	ECO timing repeat period	The days of the week on which timed ECO repeats.

Function manage — view only.

TABLE 6-15 Output setting › Function manage (view only)

No.	Item	Description
1	Inverter and bypass out of sync alarm function	On: an alarm is raised when the inverter is not in sync with the bypass.
2	Max. time bypass to inverter out of sync	Longest transfer time from bypass to inverter when not in sync.
3	Max. time inverter to bypass out of sync	Longest transfer time from inverter to bypass when not in sync.
4	Output frequency tracking rate	How fast the inverter follows the bypass frequency within the tracking range.
5	Output frequency tracking range	Range within which the inverter tracks the bypass frequency and phase.
6	Bypass output allowed when over-temperature	On: the bypass still feeds the load after an over-temperature is detected.
7	Bypass normal short-circuit protection time	Short-circuit detection time with a normal bypass.
8	Bypass abnormal short-circuit protection time	Short-circuit detection time with an abnormal bypass.

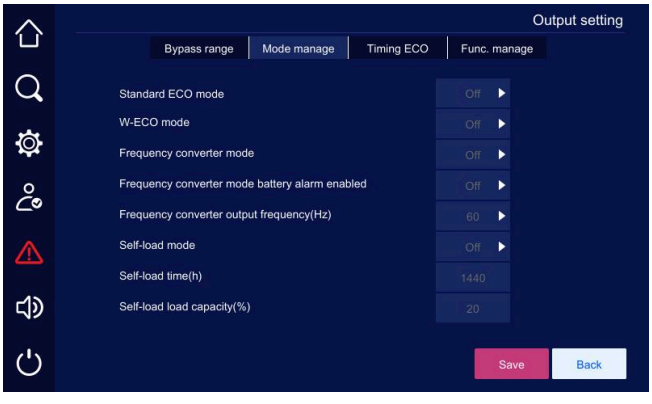

FIGURE 6-42 Output setting › Mode manage

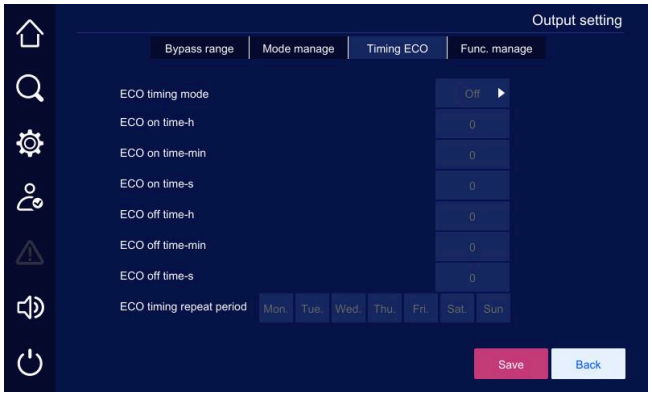

FIGURE 6-43 Output setting › Timed ECO

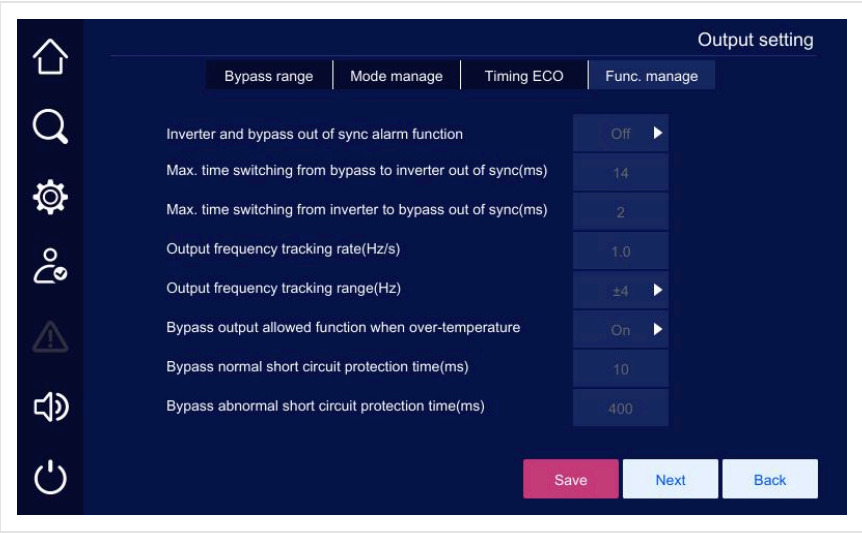

FIGURE 6-44 Output setting › Function manage

6.5.6 Smart mode

Sleep redundancy. In a cabinet with a redundant module, the redundancy mode tells the UPS how many modules are basic and how many redundant. AEC service sets it at commissioning. Example, 100 kVA cabinet (one 100 kW module standard) with one redundant module:

1. Select **Redun.** in the redundancy sleep setting.
2. Set **Basic module number inside cabinet** to 1 and **Redundancy module number inside cabinet** to 1. Save.

For a 200 kVA cabinet set the basic module number to 2; the rest is the same. **Sleep safety load** default: 200 kVA.

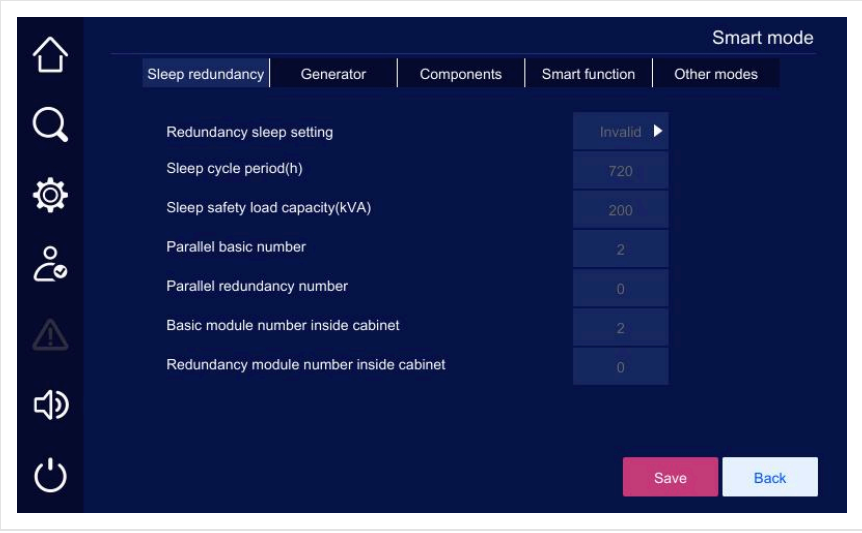

FIGURE 6-45 Smart mode › Sleep redundancy

TABLE 6-16 Smart mode › Generator (view only)

No.	Item	Description
1	Generator start mode	Automatic: the generator starts automatically. Manual: started with “Start generator”.
2	Generator charge output function	Whether the battery is charged in generator mode.

No.	Item	Description
3	Generator charge power derating	The charge power is reduced by the set ratio in generator mode.
4	Generator rated power	Rating of the generator. If the load exceeds it, the battery supplies the difference.
5	Start generator	Starts the generator manually.

TABLE 6-17 Smart mode › Components — only **UPS forced dedusting** can be set

No.	Item	Description
1	Fan mode	Automatic: fan speed from load and temperature. Manual: fan speed as set. Dust is blown out periodically at the set interval.
2	Timed self-dedusting period	Interval of the automatic dust removal.
3	Bus capacitor service life alarm	On: an alarm when the DC bus capacitors reach the end of their life.
4	Fan service life alarm	On: an alarm when the fans reach the end of their life.
5	**UPS forced dedusting** (user)	The fans run at full speed to blow the dust out of the modules. On or Off.

TABLE 6-18 Smart mode › Smart function (view only)

No.	Item	Description
1	First power-on guide function	At the first power-on a guide screen helps set the basic parameters.
2	Module first power-on self-check	After the first power-on, the modules can run a self-test.
3	Sleep load rate	Load rate below which modules can go to sleep.
4	Awake load rate	Load rate above which sleeping modules wake up.
5	Running record recording period	Interval of the running record.
6	Enable safe running time statistics	On: counts the running time in utility inverter and battery inverter mode.

TABLE 6-19 Smart mode › Other modes (view only)

No.	Item	Description
1	EPO linkage mode	On: an EPO on one UPS of a parallel system also triggers the EPO of the linked cabinets (Section 5.2.4).
2	Module start delay	Each module starts after delay × module address.
3	Cabinet start delay	Each parallel cabinet starts after delay × cabinet address.
4	Cabinet temperature detection function	On: the cabinet temperature is monitored.
5	Cabinet over-temperature alarm value	Above it, an over-temperature alarm is raised.
6	Force switch master and spare system card	Swaps the primary and backup system control cards.
7	Local parameters synchronized to the system	Copies this UPS's parameters to the other UPS of the parallel system.
8	Master and spare card parameter sync	Copies the parameters of the primary card to the backup card.

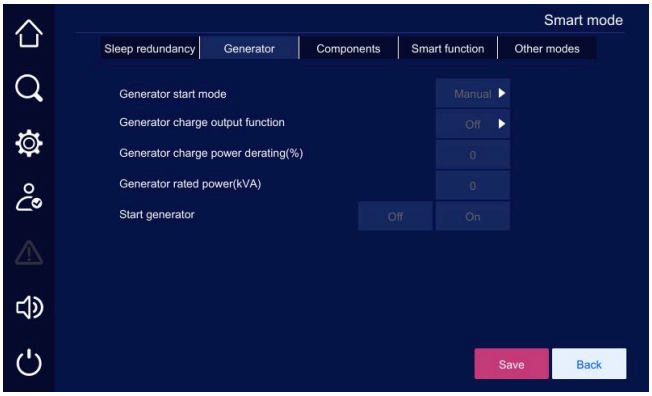

FIGURE 6-46 Smart mode › Generator

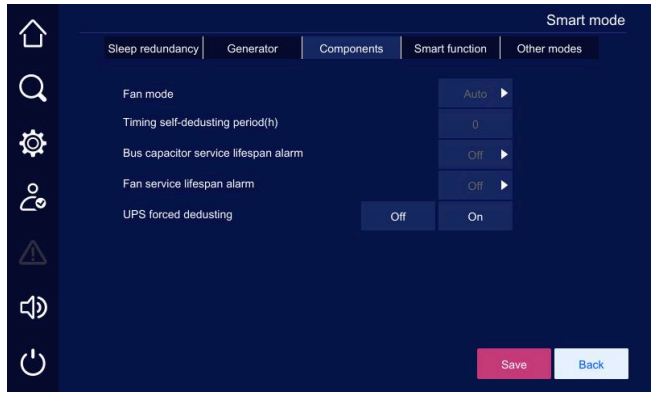

FIGURE 6-47 Smart mode › Components

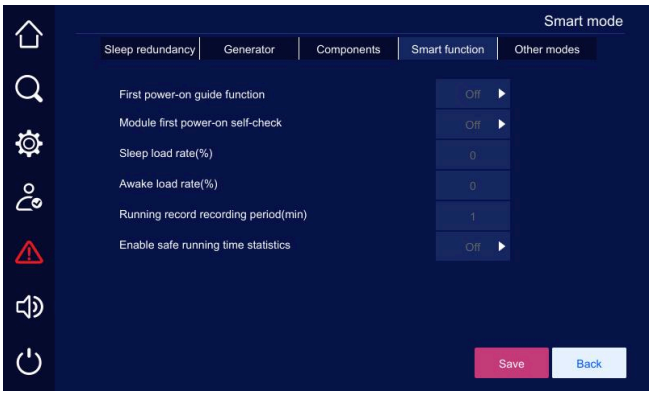

FIGURE 6-48 Smart mode › Smart function

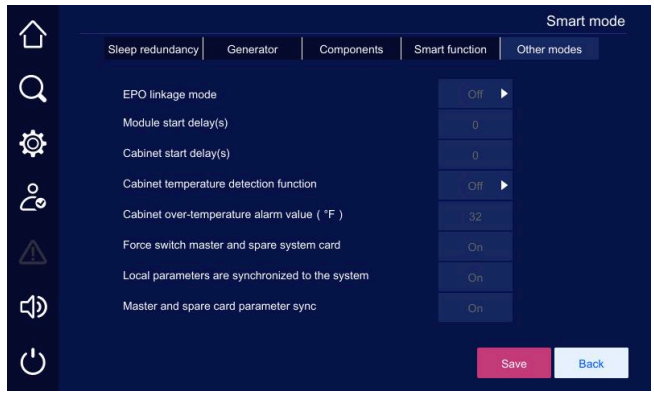

FIGURE 6-49 Smart mode › Other modes

6.5.7 Dry contact

The **Dry contact** page shows the definition of each input (IN.1 to IN.9) and output (OUT.1 to OUT.6). The definitions are listed in Table 2-6 and Table 2-7. To change one, call AEC service.

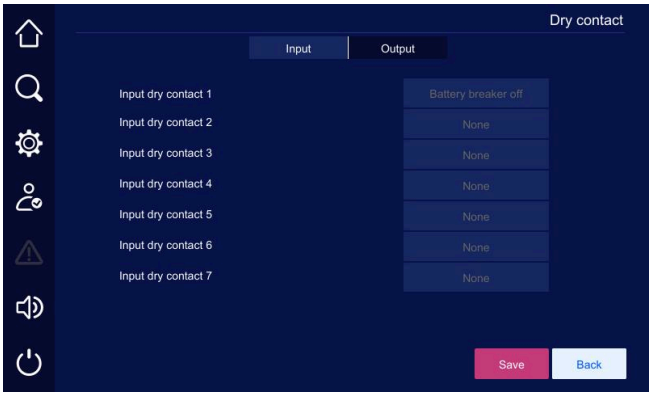

FIGURE 6-50 Dry contact › Input

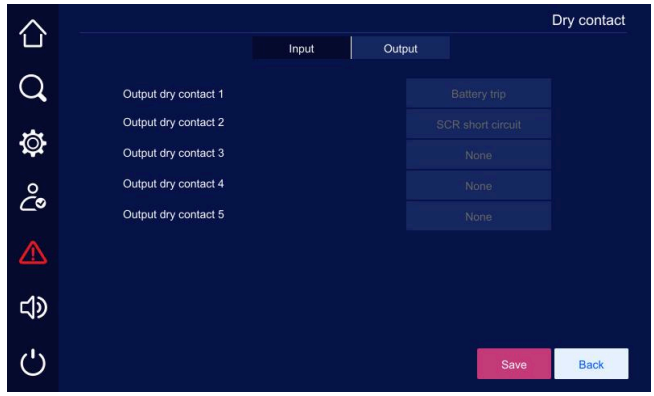

FIGURE 6-51 Dry contact › Output

6.5.8 Communication setting

RTU — the user can set these values.

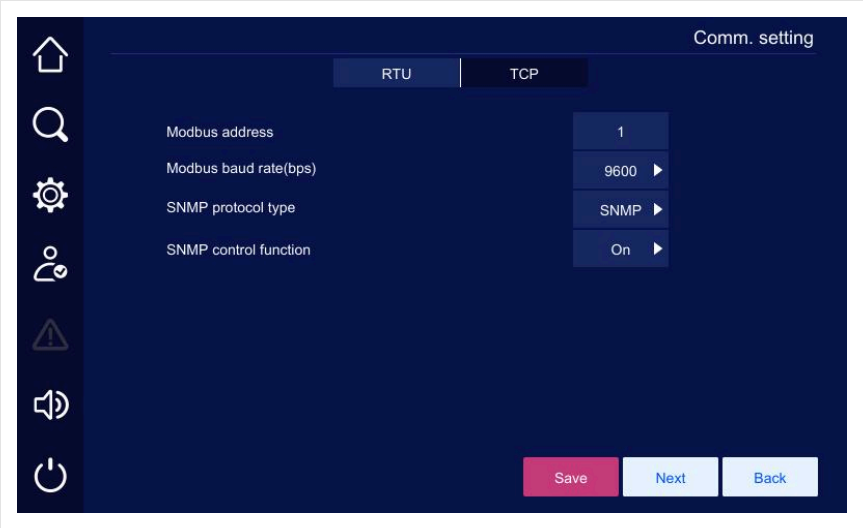

Figure 6-52Comm. setting › RTU

TABLE 6-20 Comm. setting › RTU

No.	Item	Description	Range
1	Modbus address	Address on the serial link.	1 to 247, default 1
2	Modbus baud rate	Must match the upper computer.	2400, 4800, 9600 or 19200, default 9600
3	SNMP protocol type	Protocol between the SNMP card and the UPS. With the AEC SNMP-L card set **Modbus** (Chapter 8).	SNMP or Modbus, default SNMP
4	SNMP control function	On: the SNMP card can communicate with and control the UPS.	On or Off

Smart integrated display — the user can set these values (**Next** on the RTU page). Wiring: Section 2.7.1.

TABLE 6-21 Comm. setting › Smart integrated display

No.	Item	Description	Range
1	Smart integrated display function	On: the touchscreens of parallel UPS communicate; the host shows the others.	On or Off, default Off
2	Parallel monitor type	This UPS is the host or a slave.	Host or slave
3	Parallel monitor address	Address of this UPS in the integrated display.	1 to 8
4	Parallel monitor baud rate	Baud rate of the integrated display link.	2400, 4800, 9600 or 19200, default 9600
5	Parallel monitor quantity	Number of cabinets in the integrated display.	2 to 8, default 2

TCP — the network settings of the UPS (Modbus TCP).

TABLE 6-22 Comm. setting › TCP

No.	Item	Description
1	IP address	IP address of this UPS
2	Subnet mask	Subnet mask of this UPS
3	Gateway	Gateway of this UPS
4	MAC	MAC address of this UPS (view only)

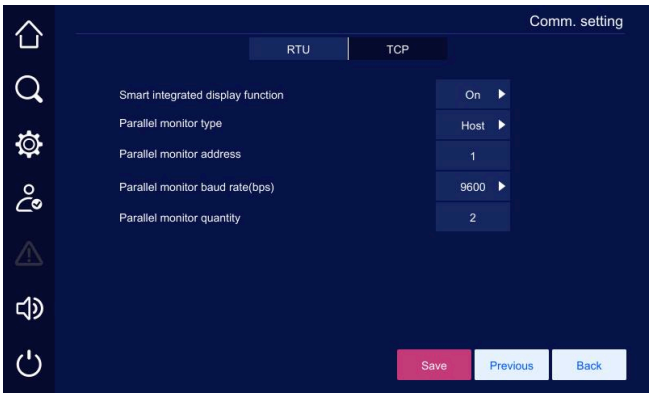

FIGURE 6-53 Comm. setting › Smart integrated display

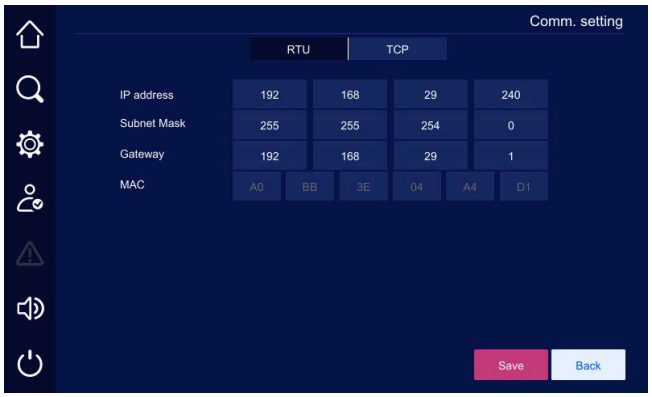

FIGURE 6-54 Comm. setting › TCP

6.5.9 Screen setting

TABLE 6-23 Screen setting › Basic functions

No.	Item	Description	Range
1	Backlight	The screen turns off after this time.	1 to 999 min
2	Language	Screen language.	English (Chinese also available)
3	Atmosphere light	On: with the screen off, the V-shaped light bar shows the status color.	On or Off
4	Brightness	Screen brightness.	– / +

TABLE 6-24 Screen setting › Time setting

No.	Item	Description	Range
1	Time zone	Local time zone.	UTC−12 to UTC+12
2	NTP time synchronization	Automatic time from an NTP server.	On or Off
3	Date	Date.	—
4	Time	Time.	—

i NOTE US Eastern time is UTC−5 (UTC−4 in summer), Central UTC−6, Mountain UTC−7, Pacific UTC−8. Set the correct time: the records use it.

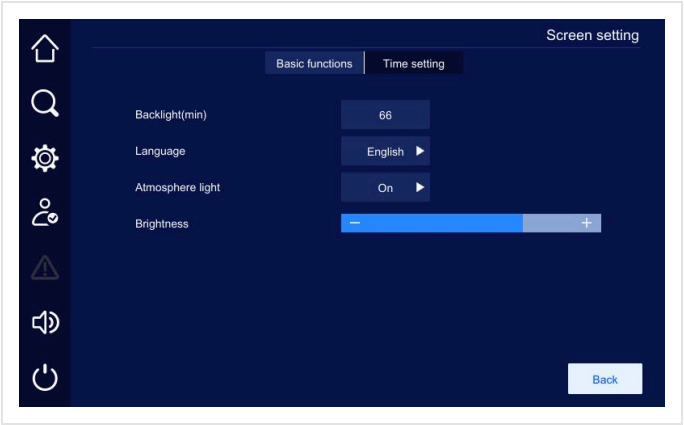

FIGURE 6-55 Screen setting › Basic functions

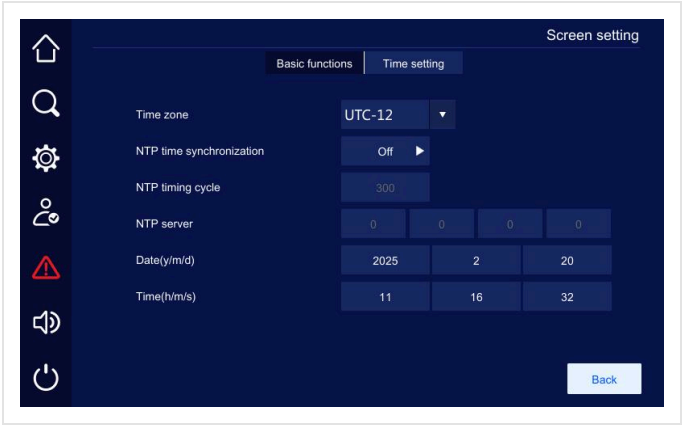

FIGURE 6-56 Screen setting › Time setting

6.5.10 Password setting

Enter the old password, the new password and the new password again, then **Save**.

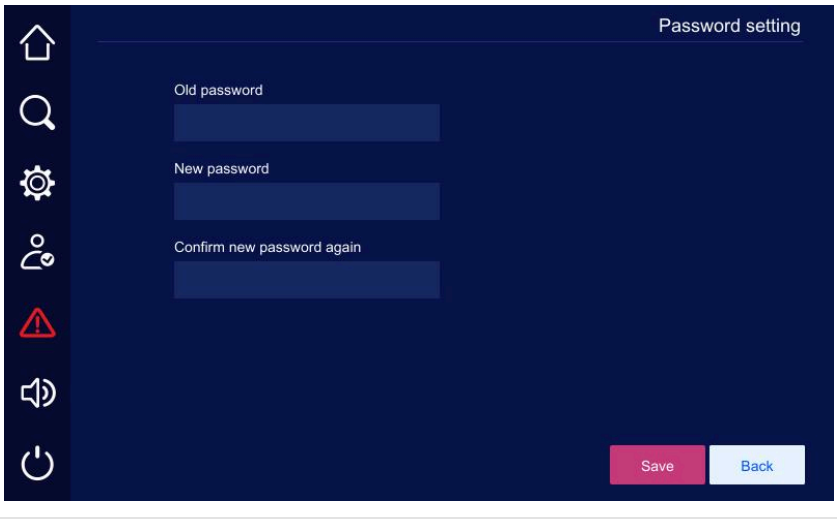

FIGURE 6-57 Password setting

> **i NOTE** The user password is given by AEC at commissioning; change it and keep it in the installation record (Appendix G). Service-level access is reserved to AEC service — call +1 786 553 2100.

6.5.11 Record manage

Export records (arrow icon) or clear them (bin icon: history record and user log only). The bar shows the progress.

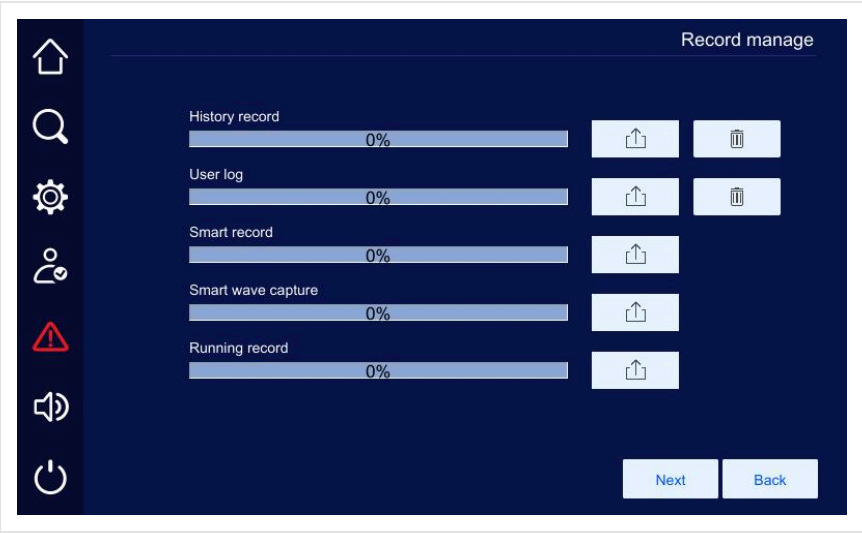

FIGURE 6-58 Record manage

6.5.12 Energy storage UPS

The energy storage UPS mode discharges the battery at set times of day (time-of-use operation), to lower the cost of electricity. It needs a battery sized for daily cycling, normally AEC L6 lithium; ask AEC before you use it.

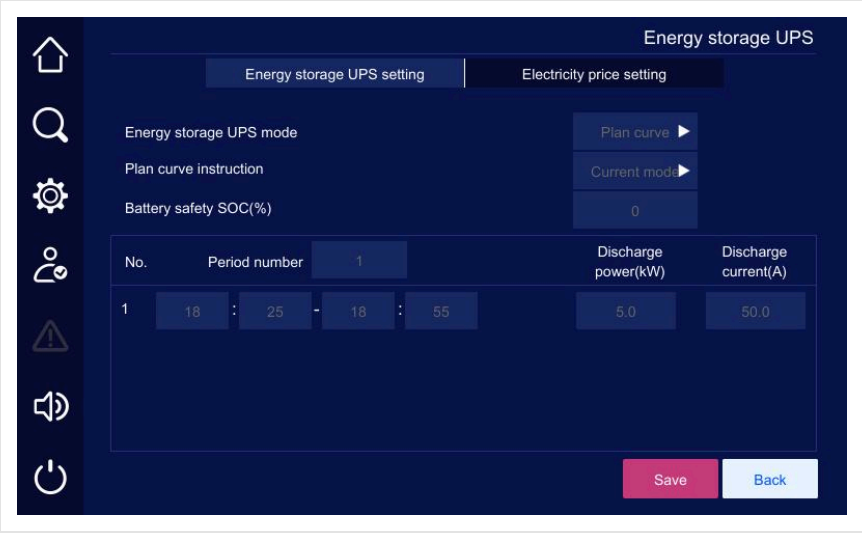

FIGURE 6-59 Energy storage UPS: mode, plan curve instruction, battery safety SOC and the discharge periods (start, end, power or current)

TABLE 6-25 Energy storage UPS

No.	Item	Description	Range
1	Energy storage UPS mode	Enables discharge at set times (time of use), to offset electricity prices.	Off, Plan curve or EMS scheduling
2	Plan curve instruction	In plan-curve mode, the UPS discharges at constant power or constant current.	Power mode or Current mode
3	Battery safety SOC	Discharge stops when the battery state of charge falls below this value, keeping a reserve for outages.	1 to 99 %

No.	Item	Description	Range
4	Period number	Number of discharge periods; each has a start time, an end time and a discharge power (kW) or current (A).	0 to 8

On the **Electricity price setting** tab, set the price of each period: the UPS then calculates the savings of the energy storage mode.

> ⚠ ***CAUTION***
>
> Set the battery safety SOC high enough to keep the runtime your load needs in an outage. Energy storage discharges add battery cycles.

6.6 Inverter ON / OFF

Tap the **Inverter ON/OFF** icon. With the inverter off, the inverter startup page opens: **Single ON** on a single UPS, **Parallel ON** on a parallel system (Figure 5-3). With the inverter on, the shutdown page opens: **Single OFF** or **Parallel OFF** (Figure 5-5).

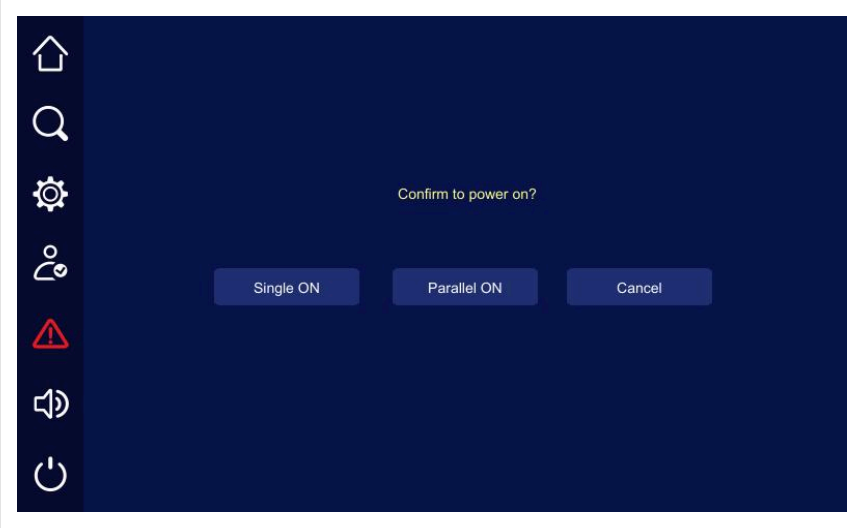

FIGURE 6-60 Inverter startup page on a parallel system — Parallel ON active

CHAPTER 7

07 Maintenance and troubleshooting

The maintenance bypass, replacing modules, cards and the touchscreen, the maintenance checklists for the UPS, lead-acid and lithium batteries, the battery tests, the schedule, fault finding and emergency measures.

7.1 Maintenance bypass

Use the external maintenance bypass to service the UPS without cutting the load.

⚠ CAUTION

Only qualified personnel may do the following. AEC is not responsible for problems caused by unauthorized personnel.

7.1.1 From inverter to maintenance bypass

⚠ CAUTION

With a normal bypass, the system goes to bypass output when the inverter stops. With an abnormal bypass, the output goes off. Before you stop the inverter, make sure the load is off or can stand a power cut at any time.

1. Stop the inverter: hold the **OFF** key pair on the operation panel for 3 s (Figure 2-5, item 8) — or touch the **Inverter ON/OFF** icon, then **Single OFF** (**Parallel OFF** on a parallel system) (Figure 5-5). You see: the DC/AC indicator goes off and the bypass indicator turns green: the system is in bypass output.
2. Check again that the inverter is off. Close the **external maintenance bypass switch** (Figure 7-1). You see: the touchscreen shows “Maintenance bypass open”.
3. Open the **external battery switch**, the **utility switch**, the **bypass switch** and the **output switch** of the UPS, one by one (Figure 7-2).
4. Wait until the touchscreen and the indicators are off. After 10–15 minutes you can work on the UPS — check with a meter first.

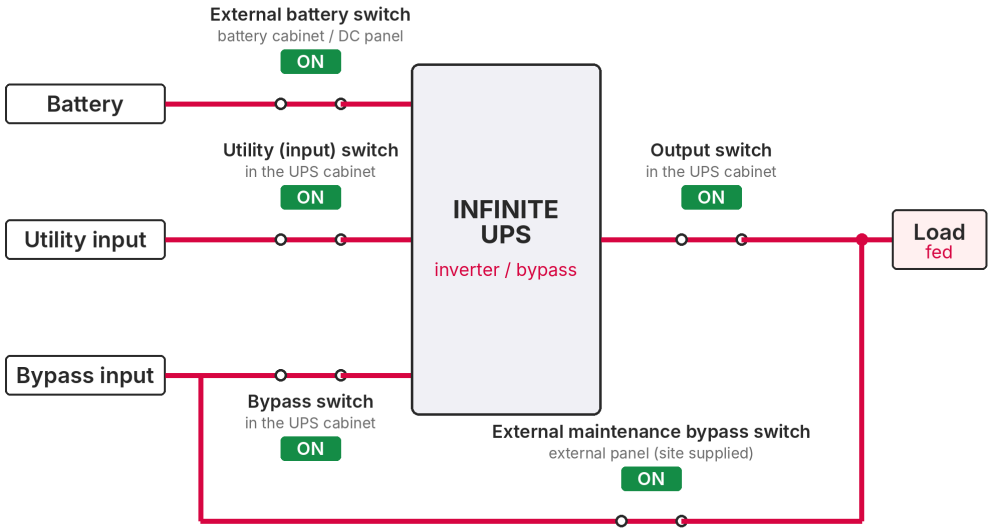

FIGURE 7-1 Step 2: maintenance bypass switch ON, all other switches still ON

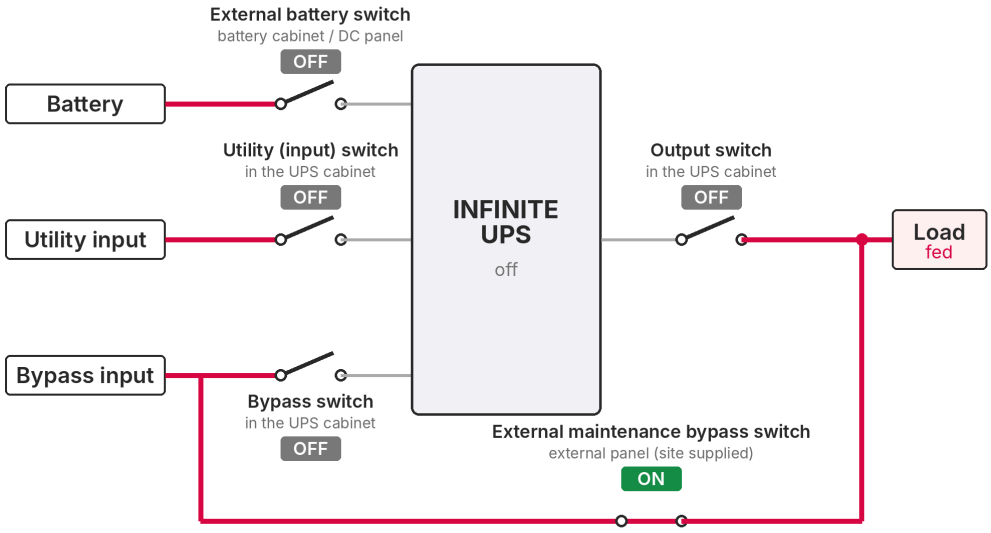

FIGURE 7-2 Step 3: only the maintenance bypass switch ON — the UPS is isolated, the load is on the maintenance bypass

⚠ DANGER

- On maintenance bypass, **never close the output switch** of the UPS.
- On maintenance bypass, the maintenance bypass is a separate live source: the load side of the output switch and the output conductors are live. Contact can be fatal.

7.1.2 From maintenance bypass back to inverter

⚠ CAUTION

Before you return the load to the inverter, check that the bypass input of the system is normal.

1. Close the **bypass switch**, then the **utility switch**.

2. Set the ready switch of the bypass module to **locked**. Check that the touchscreen does not show "Not allow to connect battery", then close the **external battery switch**.
3. Close the **output switch** (Figure 7-1). The output icon on the main page shows that the output is fed.
4. When the bypass indicator on the operation panel is green, open the **external maintenance bypass switch** (Figure 2-25). You see: the "Maintenance bypass on" message disappears and the buzzer stops.
5. Set the ready switches of all power modules to **locked**.
6. Wait until the RUN indicators of all power modules flash slowly green, then start the inverter: hold the **ON** key pair for 3 s — or touch **Inverter ON/OFF**, then **Single ON** (**Parallel ON** on a parallel system). You see: the DC/AC indicator turns green; about 10 s later the bypass indicator goes off and the system is in inverter output.

7.2 Replacing a power module or the bypass module

i NOTE The bypass module is replaced the same way as a power module. The steps show a power module.

⚠ *CAUTION*

- Move a module with three people, or with a suitable lift truck. A power module weighs 119 lb (54 kg).
- Keep foreign objects out of the connectors of the module and the cabinet.
- The module plugs into the cabinet by its rear connectors. Push it in slowly and evenly; never force it, or the connectors can bend and make poor contact.
- Once the module is in, do not pull it out and push it in again quickly.
- Lock the wheels of the lift truck and keep its platform clear.
- Use the lift truck only for short moves on firm, flat floors — never on slopes or uneven floors.

Remove the module.

1. Open the front door with the key.
2. Set the ready switch of the module to **unlocked** (green) (Figure 2-9, item 5).
3. Remove the screws that hold the module to the cabinet (M6, 4 pieces).
4. Raise the lift truck to the module. Pull the module out slowly by its handles. When the red line on its side appears, press the positioning lock on the left side and pull the module out smoothly onto the lift truck (Figure 7-3).

Fit the new module.

1. Unpack the module and set its ready switch to **unlocked**.
2. Lift the module on the lift truck to the slot and push it in slowly. When it meets the cabinet connector, push it gently home.
3. Fit the fixing screws (M6, 4 pieces, 40 lb-in / 4.5 N·m).
4. Set the ready switch to **locked** (red) (Figure 7-4).
5. Close the front door.

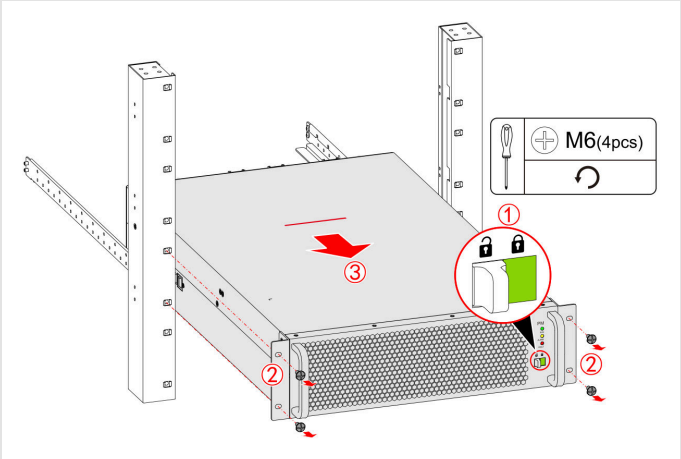

FIGURE 7-3 Remove: ready switch unlocked (1), screws out (2), pull out, press the positioning lock (3)

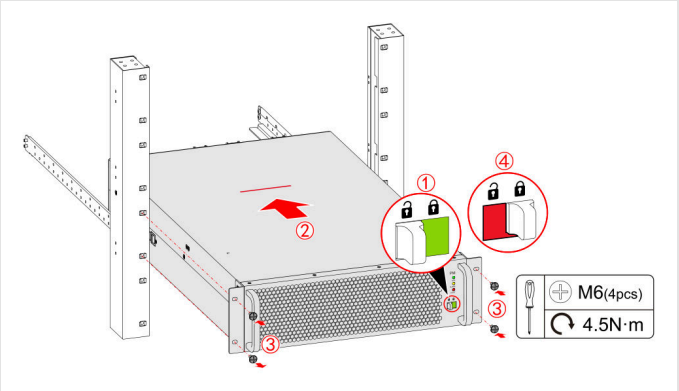

FIGURE 7-4 Fit: push in, screws (M6 × 4, 40 lb-in / 4.5 N·m), ready switch locked

7.3 Replacing the system monitoring card

1. Loosen the two M3 screws of the monitoring card and pull the card out (Figure 7-5).
2. Slide the new card into its slot in the system control box and tighten the screws (8 lb-in / 0.9 N·m) (Figure 7-6).
3. Reconnect the communication cables.

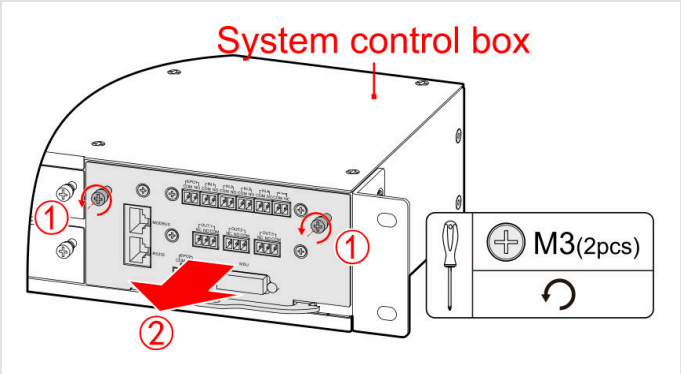

FIGURE 7-5 Remove the monitoring card (M3 × 2)

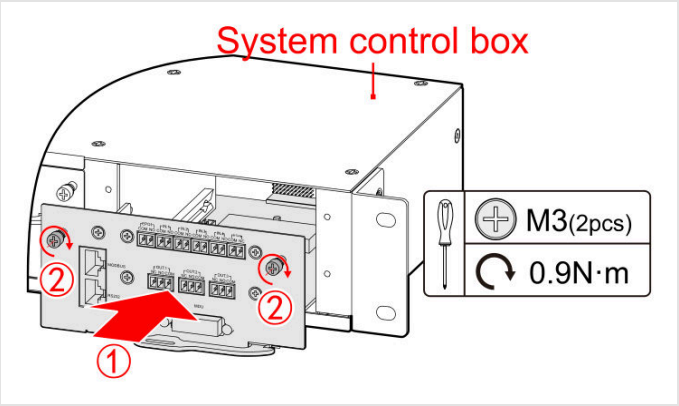

FIGURE 7-6 Fit the new card (8 lb-in / 0.9 N·m)

7.4 Replacing the touchscreen

1. Open the front door and disconnect the cable between the touchscreen and the system control box.
2. Remove the four M4 screws that hold the touchscreen.
3. Free the hooks by moving the screen up and down.
4. Push the touchscreen gently outward to remove it (Figure 7-7).
5. Fit the new touchscreen in the reverse order and reconnect the cable.

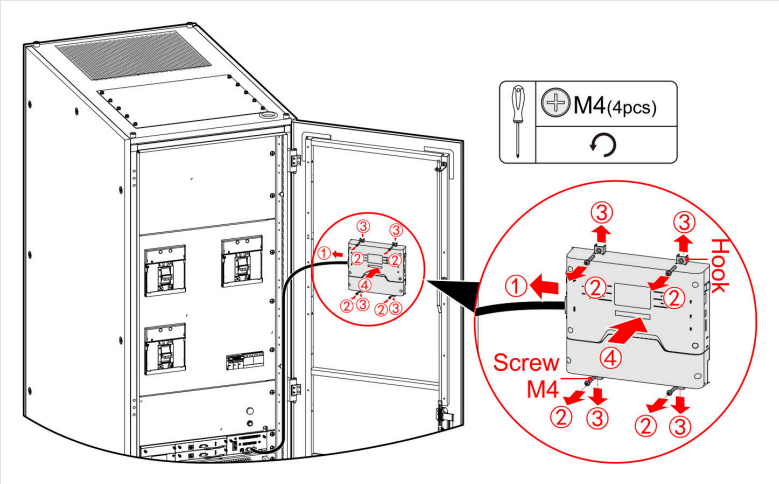

FIGURE 7-7 Touchscreen on the inside of the door: cable (1), M4 screws (2), hooks (3)

7.5 Maintenance checklists

7.5.1 UPS

TABLE 7-1 UPS — environment

Item	Requirement	Method · remedy	Interval
Equipment room	Fire door closed; air conditioning runs without interruption. The room is closed: the UPS is not in a stream of outside air. No dust or flammable material.	Visual · correct to the requirement	Monthly
Rodent protection	Rodent barriers and traps in place.	Visual · correct	Monthly
Clearances	Distances to surrounding objects as in Table 4-2.	Visual, tape measure · correct	Monthly
Position	No air-conditioning outlet or refrigerant pipe above the UPS; no other water leak risk.	Visual · correct	Monthly
Room temperature	Measured: _____ °F. Range 32 to 104 °F (0 to 40 °C).	Thermo-hygrometer · check the air conditioning	Monthly
Room humidity	Measured: _____ % RH. Range 0 to 95 % RH, non-condensing.	Thermo-hygrometer · check the air conditioning	Monthly

TABLE 7-2 UPS — components

Item	Requirement	Method · remedy	Interval
Installation	Equipment installed correctly and neatly; screws tight.	Visual · correct	Monthly
Appearance	A white paper wiped on the surface does not turn black. No rust, no deformation.	Visual · correct; clean or replace the air filter when you remove dust	Quarterly
Cable holes	The cable holes are sealed with the supplied plates, rodent-proof.	Visual · correct	Quarterly
Air outlet	The air outlet is not blocked.	Visual · correct	Quarterly
Metal debris	No copper chips or other foreign objects in the cabinet.	Visual · correct	Quarterly

Item	Requirement	Method · remedy	Interval
Ground conductor	Firmly connected to the ground bar of the room; screws tight.	Visual · tighten the screws	Yearly
Ampacity	The breakers and cables suit the load; the cable ampacity is above the breaker rating.	Visual · with the UPS off, replace breakers or cables	Yearly
Power cables	Cables and insulation intact; terminal screws tight, torque marks not moved; no blackening or burn marks at the connections.	Visual · with the UPS off, replace the cables or tighten the screws	Yearly
Signal cables	Cables and insulation intact; terminals tight.	Visual · replace the cables	Yearly

TABLE 7-3 UPS — running state

Item	Requirement	Method · remedy	Interval
Supply	Input voltage 480 V line to line; output voltage 480 V line to line; input frequency 40 to 70 Hz.	Touchscreen readings · input abnormal: check the utility or the input wiring; output abnormal: read the alarms and act on them	Monthly
Operating state	All diagrams on the touchscreen normal; all readings within range; no fault or alarm in the records.	Touchscreen · read the alarms and act on them	Monthly
Settings	Output voltage and frequency, number of battery cells, battery capacity, etc. as commissioned.	Touchscreen · correct the settings	Quarterly
State record	Load of each phase and output power factor recorded.	Touchscreen · balance the three phases	Quarterly

7.5.2 Lead-acid battery

TABLE 7-4 Lead-acid battery — environment

Item	Requirement	Method · remedy	Interval
Equipment room	Fire door closed; air conditioning runs without interruption. No dust or flammable material.	Visual · correct	Monthly
Rodent protection	Rodent barriers and traps in place.	Visual · correct	Monthly
Position	No air-conditioning outlet or refrigerant pipe above the battery; no other water leak risk.	Visual · correct	Monthly
Room temperature	Measured: _____ °F. Range 68 to 86 °F (20 to 30 °C).	Thermo-hygrometer · check the air conditioning	Monthly
Room humidity	Measured: _____ % RH. Range 30 to 80 % RH, non-condensing.	Thermo-hygrometer · check the air conditioning	Monthly

TABLE 7-5 Lead-acid battery — components

Item	Requirement	Method · remedy	Interval
Installation	Installed correctly and neatly; screws tight.	Visual · correct	Monthly
Rack or cabinet	No dust, rust or deformation.	Visual · correct	Monthly
Batteries	Clean; terminals intact; no damage, deformation, swelling or cracks; no acid or electrolyte leak (a leak gives a pungent smell).	Visual · call AEC service	Monthly

Item	Requirement	Method · remedy	Interval
Metal debris	No copper chips or other conductive objects.	Visual · correct	Monthly
Rack ground	Ground conductor firmly connected to the ground bar; screws tight.	Visual · tighten the screws	Yearly
Battery cables	Cables and insulation intact; screws tight, torque marks not moved; no black marks or signs of arcing.	Visual · with the UPS off, replace the cables or tighten the screws	Quarterly
Connections	With the UPS off, every connection from + to – is sound. Check the torque of every battery screw with an insulated torque wrench against the battery maker's value, then mark the screws.	Visual and torque check with the UPS off · correct	Yearly

TABLE 7-6 Lead-acid battery — running state

Item	Requirement	Method · remedy	Interval
Operating state	The touchscreen shows all batteries normal, readings within range, no battery fault or alarm.	Touchscreen · read the alarms and act on them	Monthly
Battery management settings	Settings and charge/discharge conditions meet the battery maker's requirements. Battery temperature below room temperature + 36 °F (+ 20 °C).	Touchscreen · correct the settings or the battery temperature	Quarterly
String voltage	Equalized charge: 2.35 ± 0.02 V/cell × 6 × number of 12 V blocks (for example 564 V for 40 blocks). Floating charge: the set float voltage (default 2.27 ± 0.02 V/cell) × 6 × number of blocks (for example 545 V for 40 blocks).	Touchscreen and multimeter at the string · correct the charge voltages; if the touchscreen and the meter differ by more than 1 %, call AEC service	Quarterly
Standard test (recommended)	No fault or alarm during the standard test (Section 7.6).	Run the test, read the alarms · act on them	Quarterly
Deep test (recommended)	No fault or alarm during the deep test.	Run the test, read the alarms · act on them	Yearly

7.5.3 Lithium battery

For AEC L6 lithium battery cabinets, follow also the L6 cabinet manual: its BMS monitors every module.

TABLE 7-7 Lithium battery — environment

Item	Requirement	Method · remedy	Interval
Equipment room	Fire door closed; air conditioning runs without interruption. No dust or flammable material.	Visual · correct	Monthly
Rodent protection	Rodent barriers and traps in place.	Visual · correct	Monthly
Position	No air-conditioning outlet or refrigerant pipe above the battery; no other water leak risk.	Visual · correct	Monthly
Room temperature	Measured: _____ °F. Range 68 to 86 °F (20 to 30 °C).	Thermo-hygrometer · check the air conditioning	Monthly
Room humidity	Measured: _____ % RH. Range 30 to 80 % RH, non-condensing.	Thermo-hygrometer · check the air conditioning	Monthly

TABLE 7-8 Lithium battery — components

Item	Requirement	Method · remedy	Interval
Installation	Installed correctly and neatly; screws tight.	Visual · correct	Monthly
Rack or cabinet	No dust, rust or deformation.	Visual · correct	Monthly
Batteries	Clean; terminals intact; no damage, deformation, swelling or cracks.	Visual · call AEC service	Monthly
Metal debris	No copper chips or other conductive objects.	Visual · correct	Monthly
Rack ground	Ground conductor firmly connected to the ground bar; screws tight.	Visual · tighten the screws	Yearly
Battery cables	Cables and insulation intact; screws tight, torque marks not moved; no black marks or signs of arcing.	Visual · with the UPS off, replace the cables or tighten the screws	Quarterly
Connections	With the UPS off, every connection from + to – is sound. Check the torque of every battery screw with an insulated torque wrench against the maker's value, then mark the screws for later checks.	Visual and torque check with the UPS off · correct	Yearly

TABLE 7-9 Lithium battery — running state

Item	Requirement	Method · remedy	Interval
Operating state	The touchscreen shows all batteries normal, readings within range, no battery fault or alarm.	Touchscreen · read the alarms and act on them	Monthly
Battery management settings	Settings and charge/discharge conditions meet the battery maker's requirements. Battery temperature below room temperature + 36 °F (+ 20 °C).	Touchscreen · correct the settings or the battery temperature	Quarterly
String voltage	Equalized charge voltage = 3.50 ± 0.02 V/cell × number of cells.	Touchscreen and multimeter at the string · correct the equalized charge voltage; if the touchscreen and the meter differ by more than 1 %, call AEC service	Quarterly
Standard test (recommended)	No fault or alarm during the standard test.	Run the test, read the alarms · act on them	Quarterly
Deep test (recommended)	No fault or alarm during the deep test.	Run the test, read the alarms · act on them	Yearly

7.6 Battery tests

7.6.1 Standard test

A shallow discharge, with the utility present. A battery that has not worked for a long time may not deliver; the standard test checks its health without an outage.

Before the test, make sure that:

- the utility input of the UPS is normal;
- the battery is connected correctly;
- the battery is in floating charge (**Battery info**);
- the load is at least 5 % of the rating.

1. On the touchscreen open **Setting manage › Battery setting › Manage 1** and set **Battery test time** to 10 min (Figure 6-36, item 8).
2. Open **Setting manage › Battery test** and tap **Standard test** (Figure 6-40).
3. Read the result in **Info manage › User log** when the test ends.

> **i NOTE** The standard test stops by itself when the battery voltage falls below the battery voltage alarm point, the utility voltage falls below 0.9 × rated voltage, there is no output or the output is overloaded, or an abnormal alarm appears.

7.6.2 Deep test

A deep discharge, down to the low-voltage alarm point. It gives a fuller picture of the battery's performance and health.

Before the test, check the same conditions as for the standard test. Then open **Setting manage › Battery test** and tap **Deep test**.

> **i NOTE** The deep test stops by itself under the same conditions as the standard test. After a deep test, let the battery recharge fully before you rely on its full runtime.

7.6.3 Battery cycle test

Periodic automatic tests: a standard or deep test at a set interval, with nobody on site.

1. Open **Setting manage › Battery setting › Manage 1 › Next** (Figure 7-8).
2. Set **Battery periodic test** to On.
3. Set **Management model**: standard or deep test.
4. Set **Management cycle**: 30 to 360 days. Save.

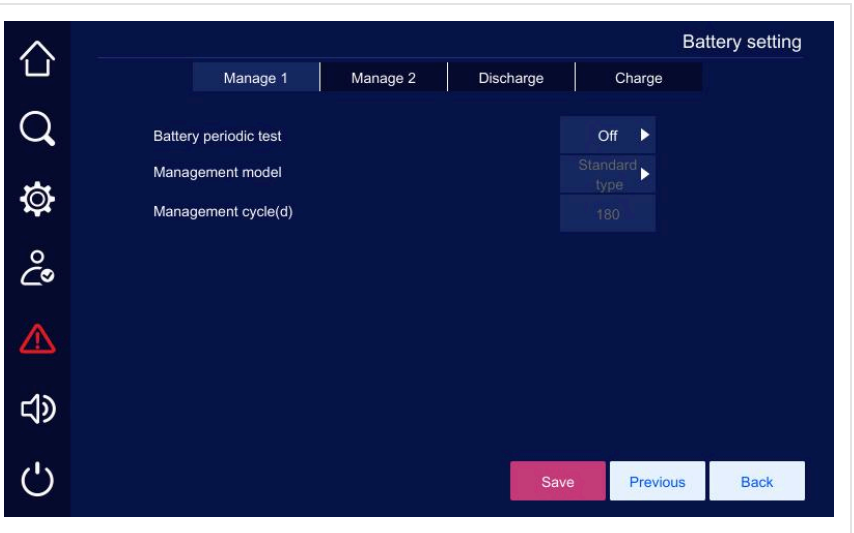

FIGURE 7-8 Battery cycle test: periodic test on/off, test type, interval in days

> **i NOTE**
> - After you set the cycle test, the UPS asks whether to run a test now: that moment starts the countdown.
> - Each scheduled test runs only if the conditions of Section 7.6.1 are met, and stops by itself on the same exit conditions.

7.7 Maintenance schedule

TABLE 7-10 Maintenance schedule at a glance

Interval	Task
Weekly	Look at the touchscreen: inverter output, no alarm, load within the rating.
Monthly	Environment and running-state checks of Section 7.5: vents clear, fans running, room 32–104 °F (0–40 °C), battery room 68–86 °F (20–30 °C).
Quarterly	Component checks; battery cables; settings; standard battery test.
Yearly	Deep battery test; torque check of power and battery connections with the UPS off; AEC service inspection of the power connections, fans, capacitors and firmware.
After any alarm	Read **Current fault** and **History record**, look the alarm up in Section 2.11, and call AEC service if it persists.

TABLE 7-11 Typical service life at 77 °F (25 °C)

Part	Typical life	Action
Cooling fans	5–7 years	Replaced at the end of the period or when the fan service-life alarm reports them.
DC bus electrolytic capacitors	7–10 years	Replaced by AEC service (bus capacitor service-life alarm).
AC filter capacitors	5–7 years	Replaced by AEC service.
VRLA batteries (5-year design life)	3–5 years	Replace as a full string.
AEC L6 lithium cabinets	See the L6 cabinet manual	Monitored by their BMS; serviced by AEC.

Life is shorter at higher temperature, in dusty rooms and under continuous heavy load. The figures are typical for online UPS; AEC service plans the replacements during preventive maintenance.

7.8 Troubleshooting

⚠ CAUTION

- When the UPS has a fault, the touchscreen shows the alarm. Clear emergency alarms before you power the UPS on again, or further faults and damage can follow.
- Never clear alarms by pulling out and reinserting modules.
- Make sure a module is faulty before you remove it. A module once removed as faulty must not be reinserted.

TABLE 7-12 Common faults

No.	Symptom	Possible cause and remedy
1	The utility is normal but the UPS runs on battery; the buzzer beeps intermittently.	Poor contact in the utility circuit to the UPS (terminals, sockets): poor AC input. Check the input connections.
2	Closing the utility switch blows a fuse or trips the upstream breaker.	Input or output wiring wrong, for example a line conductor swapped with ground. Check the wiring.
3	The UPS gives 480 V AC after start-up but stays in bypass.	The load exceeds the UPS rating: reduce it or use a larger UPS. A brief transfer to bypass caused by a load inrush that recovers by itself is normal.

No.	Symptom	Possible cause and remedy
4	The output is normal after start-up but stops as soon as the load is switched on.	Severe overload or a short circuit in the output: reduce the load or find the short circuit (output sockets, damaged equipment). If the loads were not started largest first, restart the UPS and, once it runs steadily, start the largest loads first.
5	The UPS runs normally, then shuts down after a while.	On battery, the battery reached its under-voltage protection: normal. The UPS restarts and charges when the utility returns. If the utility stays off for long, open the battery switch to protect the battery, then restart the UPS and recharge fully when the utility returns.
6	After a long run the buzzer beeps continuously and the touchscreen shows battery under-voltage.	A low utility voltage kept the UPS on battery until the under-voltage protection. Check the utility.
7	The output is normal with the utility, but there is no output without it.	Battery faulty or badly damaged; charger fault (the battery is not charged); poor battery connections; the battery switch is open; after a severe overload the UPS was not restarted and stays in bypass.
8	The buzzer beeps continuously and the UPS goes to bypass.	Read the fault on the touchscreen (Section 2.11).
9	The utility is present but the buzzer beeps intermittently.	The utility voltage or frequency is outside the UPS range.
10	With the utility the UPS works; after a utility failure the UPS still works but the load stops.	Poor grounding of the installation.
11	The FAULT indicator of a power module is on.	The power module is faulty: replace it (Section 7.2).

⚠ *WARNING*

If the battery stays at under-voltage for long, its life is shortened. Recharge it fully as soon as possible.

7.8.1 Emergency measures

System fault. Stop the inverter. If needed, switch off the load and open the input and output switches of the UPS to prevent further damage. Call AEC service.

Power module fault. A failed power module isolates itself from the system. The system normally keeps running, with less redundancy. Set the ready switch of the faulty module to **unlocked**, remove it (Section 7.2) and call AEC service for repair.

⚠ *CAUTION*

After removal, high voltage stays inside the module and on the pins of its rear connectors. Wait 10–15 minutes and measure before opening its cover for repair.

CHAPTER 8

08 Network monitoring — the SNMP-L card

The AEC SNMP-L network card: what it does, its ports, how to set it up with INFINITE, and the AEC monitoring software.

8.1 The card

The AEC SNMP-L card puts INFINITE on your network. It reads the UPS over its internal serial port and publishes the data through:

- its own web interface, in any browser;
- SNMP V1, V2c and V3 with the standard RFC 1628 UPS MIB and traps, for any network management system;
- e-mail alarms;
- the AEC programs for multi-UPS monitoring and safe shutdown.

It fits slot 2 of the system control box, behind the front door (Figure 2-11). The cards are hot-swappable. Installation: Section 4.6.2.

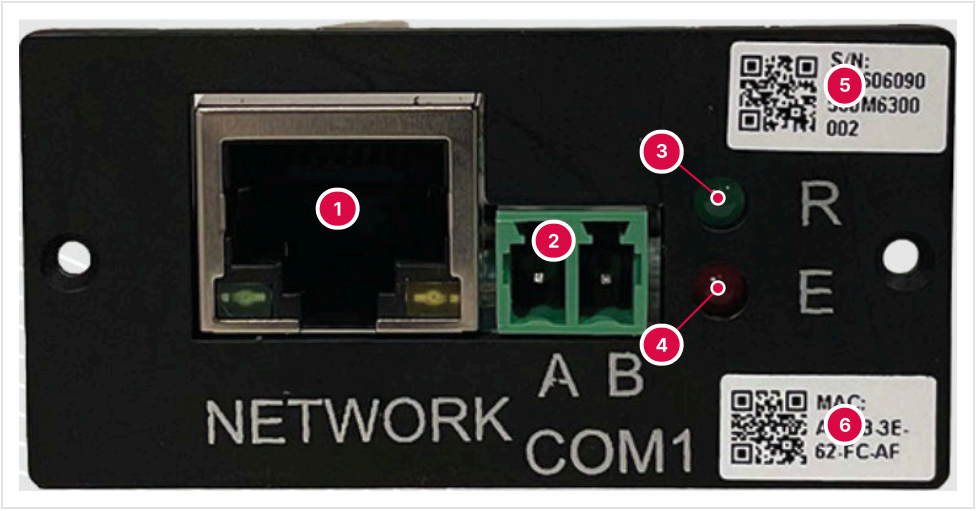

1. NETWORK port, RJ45, 10/100 Mbit/s Ethernet
2. COM1 terminal (A, B)
3. R — run indicator, green
4. E — alarm indicator, red
5. Serial number label
6. MAC address label

FIGURE 8-1 SNMP-L card plate

TABLE 8-1 SNMP-L indicators

R (green) · E (red)	Meaning
R on, E on	The card is starting.
R flashing	The card is running.
R steady on or off (not flashing)	The card has stopped and holds its last state: call AEC service.
E off	No alarm.

R (green) · E (red)	Meaning
E flashing	Alarm present.

8.2 Setting up the card

1. Fit the card in slot 2 (Section 4.6.2) and connect it to your network with an RJ45 cable (Cat 5e or better).
2. On the INFINITE touchscreen open **Setting manage › Comm. setting › RTU** (Figure 6-52): set **SNMP protocol type** to **Modbus** and **SNMP control function** to On. Save.
3. On a Windows PC in the same network, install and run the AEC card-finder program (AEC app › Support › Downloads › SNMP › SNMP-L) and press **Search**: the card appears at its factory address 192.168.0.100.
4. Select the card › **Network** › **Use Following Static IP**: give it a free address of your network, its netmask and gateway (ask your IT department). The card does not work at the factory address.
5. Open the card's web interface (**Launch Web**, or type the new address in a browser) and log in as **admin** with the password given by AEC technical service. Change it at once (**Management › User management**) and write it in the installation record.
6. **Setting › Serial port setting:** baud rate **9600** on COM1 and COM2.
7. **Management › Device management › UPS › Edit:** select the communication protocol **WRWF-1201-06_3I3O** — the exact label of the INFINITE entry in the list — and enter the UPS data from its rating label.
8. The home page shows the UPS values: the card reads the UPS. Then set the e-mail alarms (**Management › Alarm management**).

> ⚠ ***CAUTION***
>
> The PC and the card must be in the same network segment while you set the address.

TABLE 8-2 SNMP-L factory defaults

Item	Value
IP address	192.168.0.100, mask 255.255.255.0 — change it at set-up
Web interface user / password	admin; the password is given by AEC technical service — change it at the first login
Baud rate for INFINITE	9600 (COM1 and COM2)
Protocol entry for INFINITE	WRWF-1201-06_3I3O
INFINITE touchscreen	SNMP protocol type = Modbus; SNMP control function = On
SNMP ports	161 (get/set), 162 (traps)

8.3 AEC monitoring software

TABLE 8-3 AEC programs for the SNMP-L card (license-free)

Program	What it does
AEC card finder	Finds the SNMP-L cards on the network, sets their IP address and opens their web interface.
Card web interface	Built into the card: monitoring, control, alarms, e-mail and SNMP settings, in any browser.
AEC multi-UPS monitor	Watches one or many UPS (up to 1,000) from a Windows PC: live data, events, e-mail and audible alerts, a site map.

Program	What it does
AEC shutdown program	Runs on a PC or server fed by the UPS and shuts it down safely before the battery runs out.

All programs are in the AEC app (**Support › Downloads › SNMP › SNMP-L**).

✓ TIP Step-by-step instructions, every page of the web interface, SNMP and the programs: **AEC SNMP-L Network Card User Manual** (AEC-UM-SNMP-L-US), in the AEC app.

8.4 Other ways to monitor

- **Modbus RTU:** the MODBUS port of the system monitoring card (Table 2-5), address and baud rate in Table 6-20.
- **Modbus TCP:** the network settings of Table 6-22.
- **Dry contacts:** the input and output dry contacts of the system monitoring card and of the dry contact expansion card (Section 2.7.2).

CHAPTER 9

09 Removal and disposal

Taking the UPS out of service, storing it, and disposing of it.

9.1 Removing the UPS

CAUTION

After shutting the UPS down, wait 10–15 minutes. Check with a multimeter and a clamp ammeter that there is no voltage and no current, and wear protective equipment before you work on the UPS.

1. Shut the UPS down completely (Section 5.1.4) and switch off the AC and DC supplies upstream (utility, bypass and battery breakers). Lock them out.
2. Disconnect all connections in the reverse order of Section 4.7.5: communication cables, battery, output, bypass, utility, and the ground last.
3. If the UPS will be used again, store it as required in Section 1.9.

9.2 Disposal

The owner is responsible for disposing of the UPS correctly.

WARNING

Dispose of the UPS according to local regulations, to avoid damage to property and injury.

CAUTION

Some parts of the UPS can harm the environment. Dispose of it as electrical and electronic waste, following the regulations of the installation site. Recycle lead-acid batteries; return lithium batteries to AEC or a licensed recycler.

APPENDIX A

A Specifications

The technical data of the INFINITE cabinets and of their modules. Specifications may change without notice.

A.1 UPS specifications

TABLE A-1 Physical data

Item	80 kVA	100 kVA	135 kVA	160 kVA	200 kVA
Power modules, standard + redundant	1 + 1	1 + 1	2 + 1	2 + 1	2 + 1
Weight, cabinet without power modules	288 lb (131 kg)	288 lb (131 kg)	308 lb (140 kg)	308 lb (140 kg)	308 lb (140 kg)
Weight with standard modules (ordering codes)	—	452 lb (205 kg)	—	—	591 lb (268 kg)

TABLE A-2 Physical data common to all models

Item	Value
Cable entry	Top
Single power source	Supported (single power source kit)
Size, W × D × H, with eye bolts and casters	23.62 × 39.37 × 81.42 in (600 × 1,000 × 2,068 mm); tolerance ±0.08 in (±2 mm), height ±0.12 in (±3 mm)
Operating temperature	32 to 104 °F (0 to 40 °C)
Storage temperature	−13 to 131 °F (−25 to 55 °C)
Relative humidity, operation	0 to 95 %, non-condensing
Altitude	Up to 6,562 ft (2,000 m)

TABLE A-3 System data

Item	Value
Efficiency, rated utility voltage, resistive load	30 % load ≥ 96.8 % · 50 % load ≥ 97.0 % · 100 % load ≥ 96.4 %
Efficiency, battery discharge, resistive load	30 % load ≥ 96.1 % · 50 % load ≥ 96.7 % · 100 % load ≥ 95.8 %
Efficiency, ECO mode	Up to 99 %
External isolation transformer	An external 1 : 0.5 output isolation transformer can be connected.
Backfeed protection	Bypass: in inverter mode, on a shorted bypass SCR the UPS trips the bypass breaker through a dry contact (OUT.2) and its shunt trip, so that the output cannot feed back into the bypass. Utility: the main relay opens when the utility fails.
Distribution system	3 wires + PE
Communication	RS232; SNMP (SNMP-L card; BACnet support stated by the factory data — confirm with AEC); Modbus RTU and Modbus TCP/IP; BMS communication; dry contacts

Item	Value
Electromagnetic compatibility	FCC Part 15, Class A
Cooling	Forced air, front intake, top exhaust
Noise, utility inverter mode	100 kVA: < 60 dB at half load, < 65 dB at full load · 200 kVA: < 65 dB at half load, < 68.5 dB at full load
Noise, bypass mode	100 kVA: < 60 dB at 30 % load, < 62 dB at half load, < 65 dB at full load · 200 kVA: < 62 dB at 30 % load, < 65 dB at half load, < 68.5 dB at full load
Enclosure	IP20
Pollution degree	2

TABLE A-4 Utility input

Item	Value
System	3 wires + PE (no neutral)
Rated voltage	480 V AC line to line
Voltage range	336 to 552 V AC
Rated frequency	60 Hz
Frequency range	39.8 to 70.2 Hz (±0.1 Hz)
Input power factor, non-linear load	30 % load ≥ 0.98 · 50 % load ≥ 0.99 · 100 % load ≥ 0.99
Input current distortion (THDi), non-linear load	30 % load < 8 % · 50 % load < 5 % · 100 % load < 3 %
Maximum input current	112 / 137 / 193 / 224 / 274 A for 80 / 100 / 135 / 160 / 200 kVA (Table 4-4)

TABLE A-5 Bypass input

Item	Value
System	3 wires + PE
Voltage	Rated 480 V AC. Upper limit +10 or +15 % (default +15 %), hysteresis 17.3 V. Lower limit −10, −15, −20 or −30 % (default −20 %), hysteresis 17.3 V. (The touchscreen also offers +20 and +25 %, Table 6-12.)
Synchronization range	Rated 60 Hz, ±2, ±4, ±6, ±8, ±10 or ±20 % (default ±10 %); outside the limits bypass output is not allowed; accuracy ±0.1 Hz
Rated current	96 / 120 / 162 / 193 / 241 A for 80 / 100 / 135 / 160 / 200 kVA

TABLE A-6 Battery

Battery	Item	Value
Types		Lead-acid; lithium-ion (AEC L6 cabinets with BMS, or lithium iron phosphate without BMS)
Lead-acid	Rated voltage	480 V DC
	Voltage range	360 to 600 V DC
	Number of 12 V blocks	30 to 50. With 40 blocks or more the UPS power is not derated; with fewer it is derated.

Battery	Item	Value
	Cell equalized charge voltage	2.300 to 2.470 V/cell, default 2.350 V/cell
	Cell floating charge voltage	2.167 to 2.300 V/cell, default 2.270 V/cell
Lithium	Rated voltage	512 V DC
	Voltage range	384 to 640 V DC
	Number of cells	80 (as stated in the source data; see the note)
	Cell equalized charge voltage	3.40 to 3.55 V/cell, default 3.50 V/cell
Charging	Charge current-limiting coefficient	0.05 C to 0.5 C, default 0.20 C
	Charge current	Minimum 5 A. Maximum (UPS rating ÷ module rating) × 100 A. Default 20 A (0.1 C), never above the charger capacity.
	Shared battery for parallel cabinets	Supported
	Battery cold start	Supported

i NOTE 512 V nominal corresponds to 160 lithium iron phosphate cells of 3.2 V. AEC sets the cell number for the L6 cabinets at commissioning; confirm the value for your system with AEC.

TABLE A-7 Output

Item	Value
System	3 wires + PE
Voltage	480 V AC; fine adjustment −5 to +5 V in 1 V steps, default 0 V; maximum output voltage after adjustment 485 V
Frequency	60 Hz (default)
Voltage regulation	≤ 1 %
Phase displacement	Balanced resistive load ≤ 1° · unbalanced resistive load ≤ 2°
Voltage distortion (THDv)	Resistive full load ≤ 1 % · non-linear full load (PF ≥ 0.9) ≤ 3 %
Transfer time, inverter ↔ bypass	In sync: 1 ms (default). Out of sync: 1 to 15 ms, default 2 ms. On inrush, short circuit or other faults: ≤ 20 ms.
Transfer time, utility ↔ battery	0 ms
Inverter overload, PF ≥ 0.95	≤ 105 % continuous · 105–110 % 60 min · 110–125 % 10 min · 125–150 % 1 min · > 150 % immediate (300 ms)
Inverter overload, non-linear (RCD) load	PF < 0.85: above 105 % immediate (300 ms) · 0.85 ≤ PF < 0.9: above 110 % immediate · 0.9 ≤ PF < 0.95: above 115 % immediate. Two overloads must be more than 30 s apart; otherwise the allowed time is reduced linearly.
Bypass overload	≤ 135 % continuous · 136–150 % ≥ 5 min · 151–200 % ≥ 1 s · 200–300 % ≥ 100 ms · > 300 % immediate. Two overloads must be more than 30 s apart. Below 480 V line to line the overload is judged on current.
Current sharing between modules	≤ 3 %
Output DC component	−100 to +100 mV
Dynamic voltage transient	≤ ±5 % (rms and peak)

Item	Value
Transient recovery	≤ 20 ms to within ±2 % (rms and peak)
Output power factor	Settable 0.8 to 1.0 (default 1.0)
Load unbalance	≤ 1 %
Inrush withstand	Tungsten-lamp inrush (single phase): non-linear full load within 45 % of one phase without transfer to bypass
Rated current	96 / 120 / 162 / 193 / 241 A for 80 / 100 / 135 / 160 / 200 kVA

TABLE A-8 Parallel operation

Item	Value
Maximum UPS in parallel	8
Current imbalance in parallel	≤ 3 %
Parallel ECO linkage	Supported

TABLE A-9 Protections

Protection	
Input overvoltage and under-voltage	Yes
Output short circuit	Yes
Output overvoltage and under-voltage	Yes
Output overload	Yes
Over-temperature	Yes
Battery low voltage	Yes

TABLE A-10 Standards

Item	Standard
Product, safety and test standard	UL 1778 (2024), listed (file number pending)
EMC	FCC Part 15, Class A

A.2 Module specifications

TABLE A-11 Power module

Item	Value
Rating	100 kW (100 kVA at PF 1), one per 80 / 100 kVA cabinet, two per 135 / 160 / 200 kVA cabinet, plus one redundant
Size, W × D × H	17.32 × 29.53 × 5.12 in (440 × 750 × 130 mm), ±0.04 in (±1 mm), without mounting ears, handles, connectors and ribs
Package	23.50 × 34.96 × 9.02 in (596 × 887 × 229 mm)
Weight	Net 119.05 lb (54 kg) · gross 125.66 lb (57 kg)

TABLE A-12 Bypass module

Item	Value
Rating	100 kVA (80 and 100 kVA cabinets) · 200 kVA (135, 160, 200 kVA cabinets)
Size, W × D × H	17.32 × 22.64 × 5.12 in (440 × 575 × 130 mm), ±0.04 in (±1 mm)
Package	26.73 × 34.92 × 9.80 in (679 × 887 × 249 mm)
Weight	Net 34.17 lb (15.5 kg) · gross 44.75 lb (20.3 kg)

TABLE A-13 System control box

Item	Value
Size, W × D × H	17.32 × 6.89 × 2.95 in (440 × 175 × 75 mm)
Weight	11 lb (5 kg)

APPENDIX B

B Warranty

The warranty terms of AEC UPS USA for INFINITE. The sales contract prevails.

TABLE B-1 Warranty

Item	Coverage
INFINITE UPS	3 years
AEC L6 lithium battery cabinets	5 years, batteries included

Conditions

- During the warranty period AEC repairs or replaces a faulty product free of charge. Keep the purchase invoice: AEC may ask for it.
- The rating plate and the serial number must be legible.
- Parts replaced under warranty become the property of AEC.
- Allow AEC a reasonable time to repair the product.

Not covered

- Products out of the warranty period.
- Damage in transport, or caused by incorrect installation, modification or use.
- Use in an environment not allowed by this manual, or outside the applicable codes and standards.
- Installation, maintenance, modification or disassembly by anyone not authorized by AEC.
- Damage caused by non-standard or third-party parts or software.
- Damage caused by natural events (flood, lightning, earthquake, fire, etc.).

Outside these conditions AEC offers paid repair service. The product and this manual are improved continuously; if they differ, the product prevails — call AEC with any question.

Software

- The hardware and software data of the product may not be used, in whole or in part, for commercial purposes.
- Decompiling, decrypting or altering the software is prohibited.

C

APPENDIX C

Acronyms and abbreviations

The terms used in this manual.

TABLE C-1 Acronyms

Term	Meaning
AC / DC	Alternating current / direct current
AWG / kcmil	American Wire Gauge / thousand circular mils (conductor sizes)
BMS	Battery management system
BSC	Bus synchronization controller (dual-bus systems)
CAN	Controller area network (internal communication bus)
DSP	Digital signal processor
ECO / WECO	Economy (energy-saving) mode / ECO mode with harmonic compensation
EPO	Emergency power off
HMI	Human-machine interface (the touchscreen)
LED	Light-emitting diode
NEC	National Electrical Code (NFPA 70)
OSHPD	California Office of Statewide Health Planning and Development (seismic approval)
PE	Protective earth (equipment ground)
PFC	Power-factor correction
RS-232 / RS-485	Serial communication standards (TIA-232 / TIA-485)
SCR	Silicon-controlled rectifier (thyristor of the static bypass)
SNMP	Simple Network Management Protocol
SOC / SOH	State of charge / state of health of the battery
SPD	Surge protective device
STS	Static transfer switch
THDi / THDv	Total harmonic distortion of current / of voltage
UPS	Uninterruptible power supply

APPENDIX D

D Ordering codes

INFINITE configurations as sold by AEC UPS USA.

TABLE D-1 INFINITE ordering codes

Code	Configuration
INF-FRAME-100	100 kVA frame (80 and 100 kVA cabinets), no power module: top entry, input, output and bypass switches, bypass module and system control box
INF-FRAME-200	200 kVA frame (135, 160 and 200 kVA cabinets), no power module
INF-100	100 kVA: frame + 1 power module · 452 lb (205 kg)
INF-100+1	100 kVA N+1: frame + 2 power modules · 571 lb (259 kg)
INF-200	200 kVA: frame + 2 power modules · 591 lb (268 kg)
INF-200+1	200 kVA N+1: frame + 3 power modules · 710 lb (322 kg)
INF-400 · INF-600 · INF-800 · INF-1000 · INF-1200	400 to 1,200 kVA: 2 to 6 INF-200 cabinets in parallel
INF-… + L6-CAB-…	Any of the above with AEC L6 lithium battery cabinets (10 × 50 Ah or 20 × 50 Ah)
INFINITE-PWR-100	Power module, 100 kVA / 100 kW, hot-swappable, 119 lb (54 kg)

The 80 kVA cabinet is the 100 kVA frame with one module, and the 135 and 160 kVA cabinets are the 200 kVA frame with two modules, rated as ordered. The options of Table 2-9 are ordered by name from AEC.

E

APPENDIX E

Drawings

AEC engineering drawings “North America 480 V UPS, 80–200 kVA”, version 001: schematic, appearance (standard and seismic), installation, cooling and wiring. Dimensions in mm.

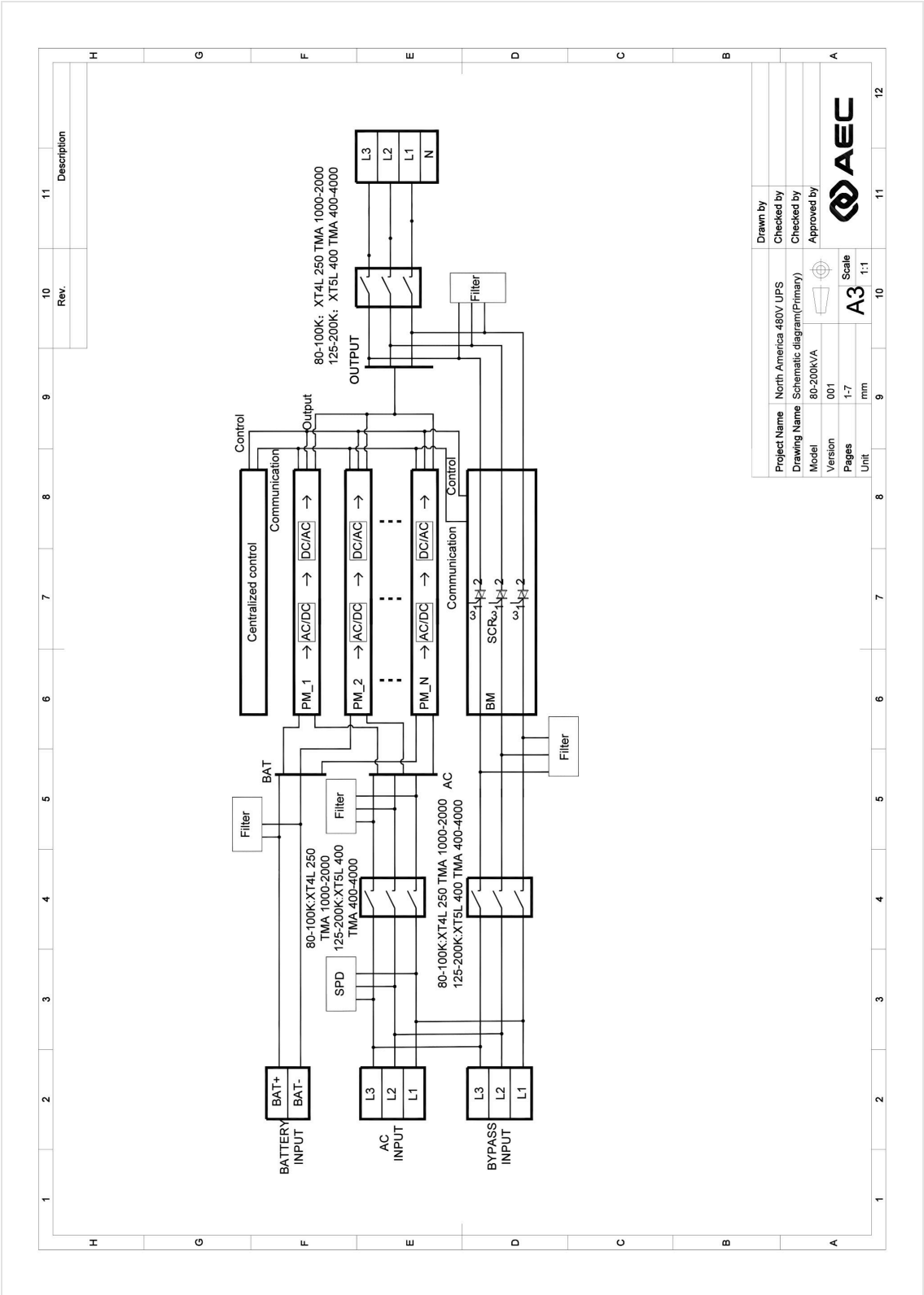

FIGURE E-1 Schematic (single-line) diagram: battery, AC (utility) and bypass inputs, internal breakers (80–100 kVA XT4L 250, 135–200 kVA XT5L 400), power modules PM_1 to PM_N, bypass module, output

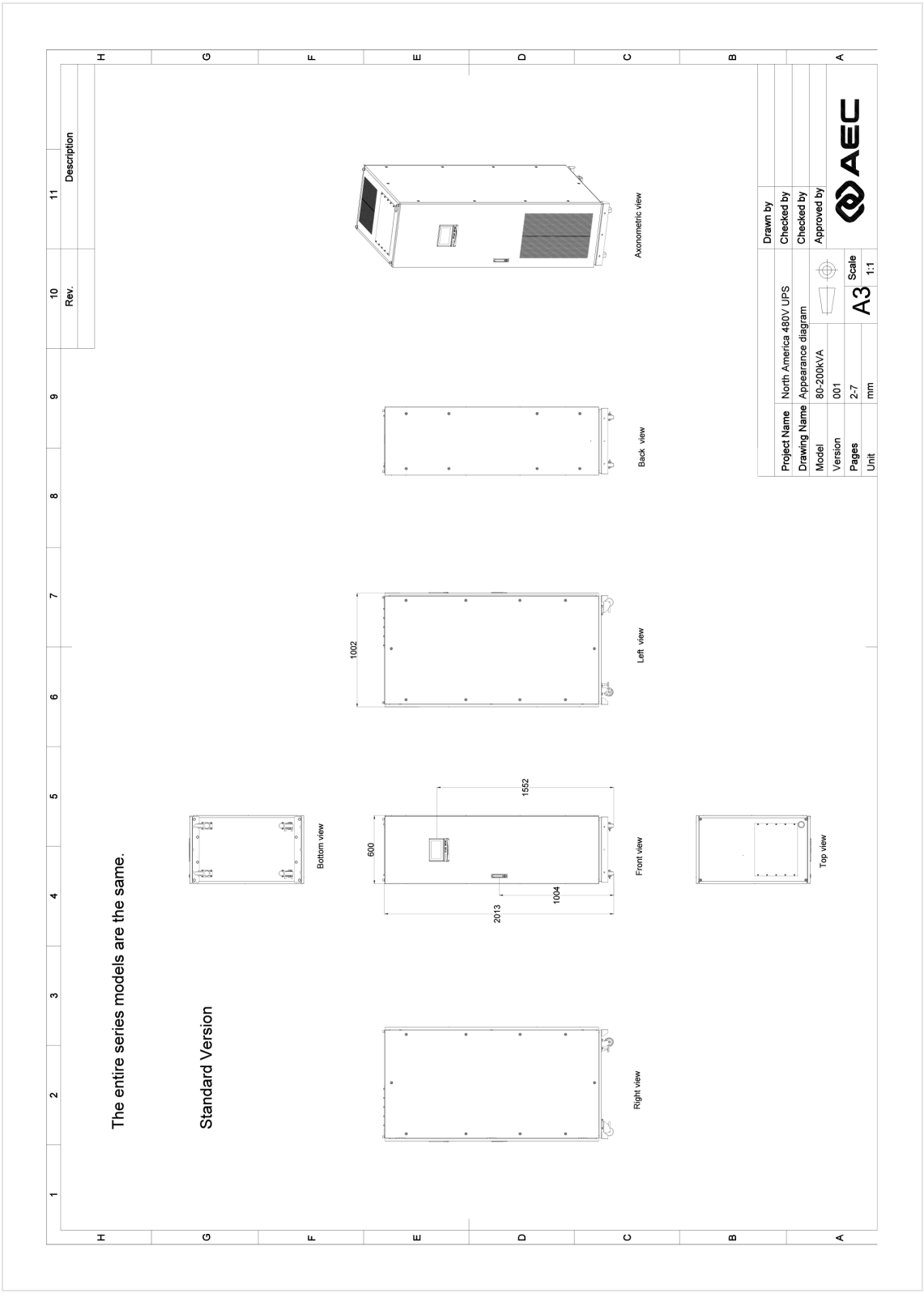

FIGURE E-2 Appearance, standard version: right, front, left, back, top and bottom views; 600 × 1,002 × 2,013 mm (23.6 × 39.4 × 79.3 in), display center 1,552 mm (61.1 in), door handle 1,004 mm (39.5 in)

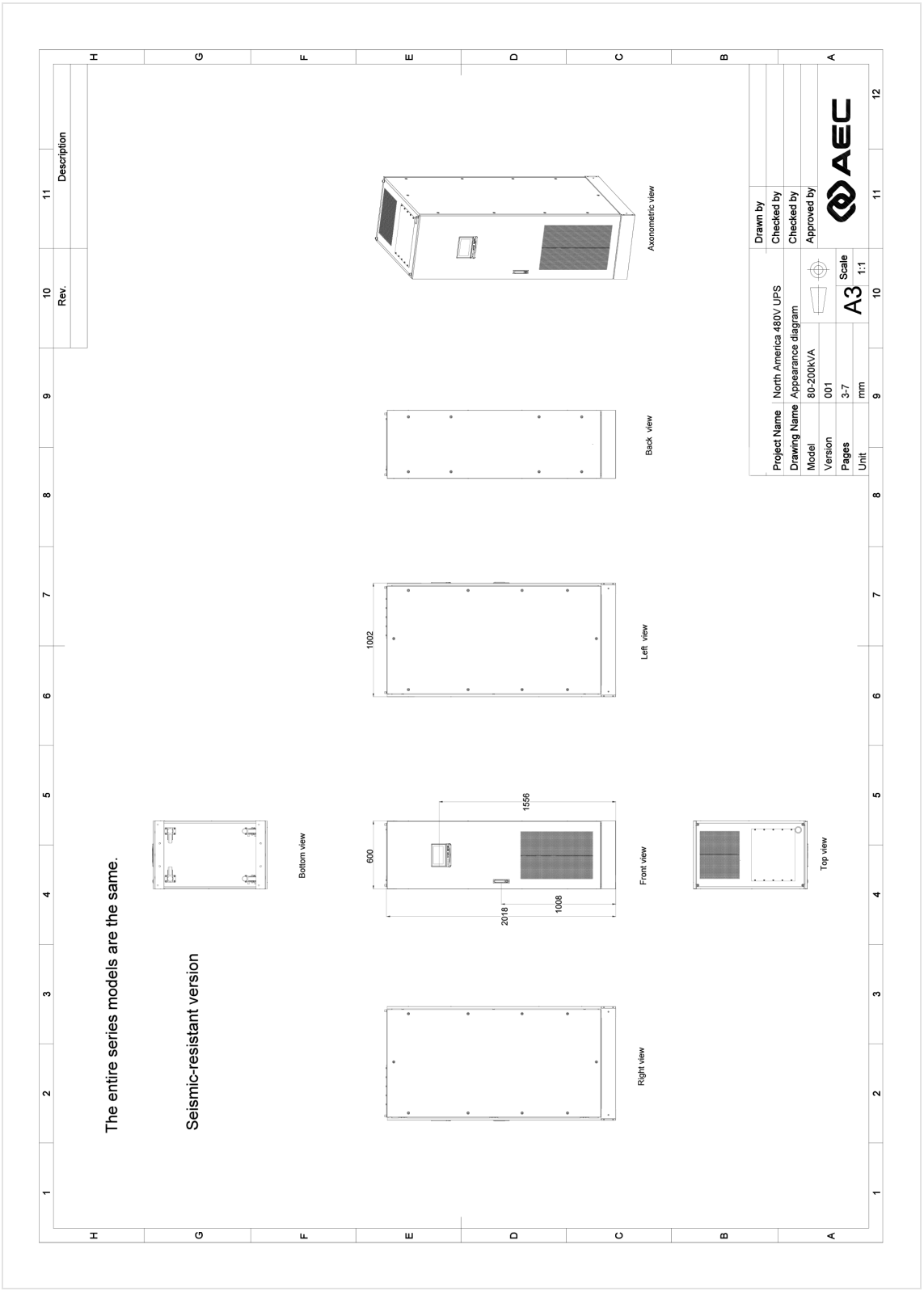

FIGURE E-3 Appearance, seismic version (with the seismic kit)

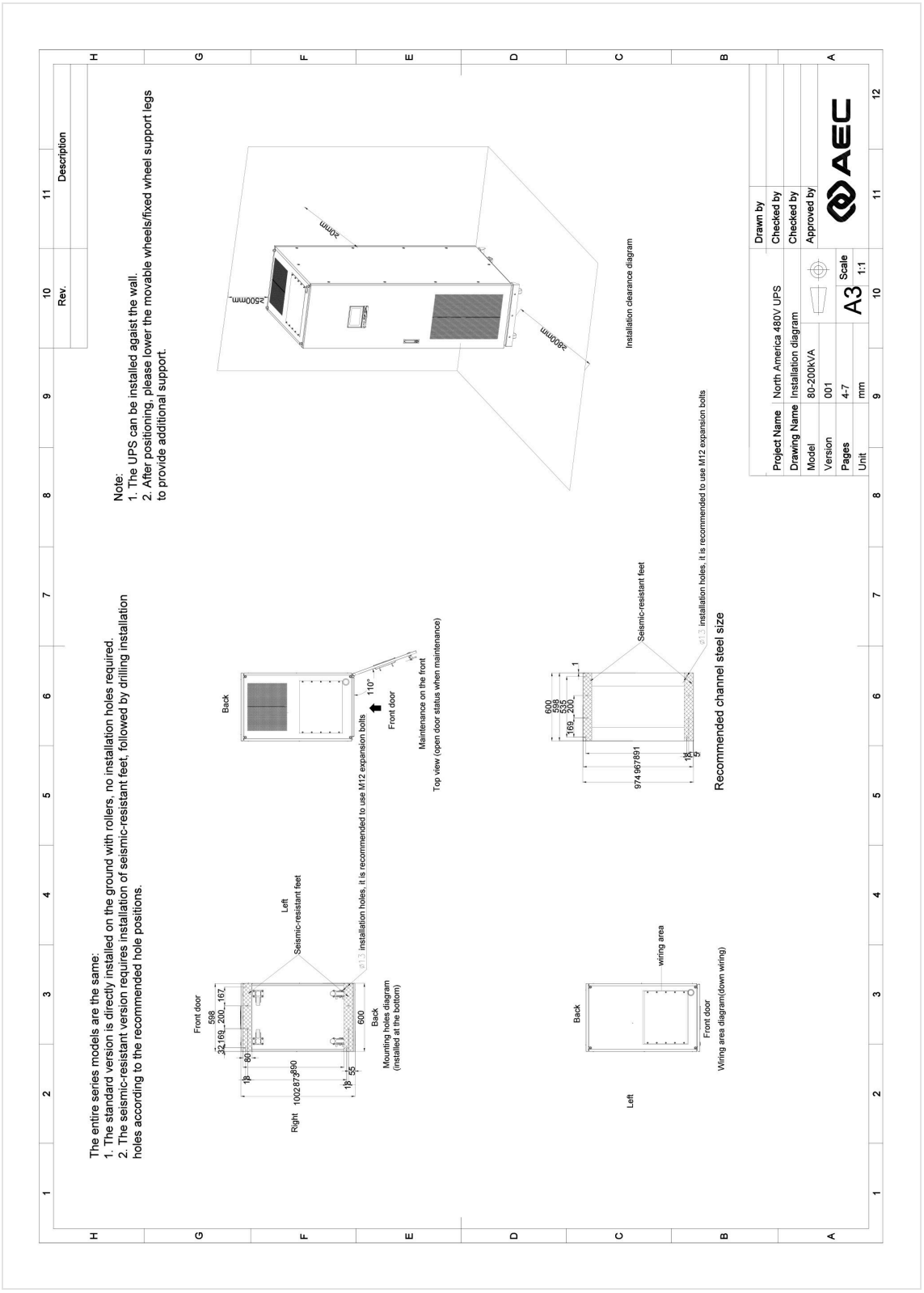

FIGURE E-4 Installation: anchor holes of the seismic version, maintenance from the front (door opens 110°), wiring area, recommended channel steel; clearances ≥ 500 mm (19.7 in) above, ≥ 800 mm (31.5 in) in front

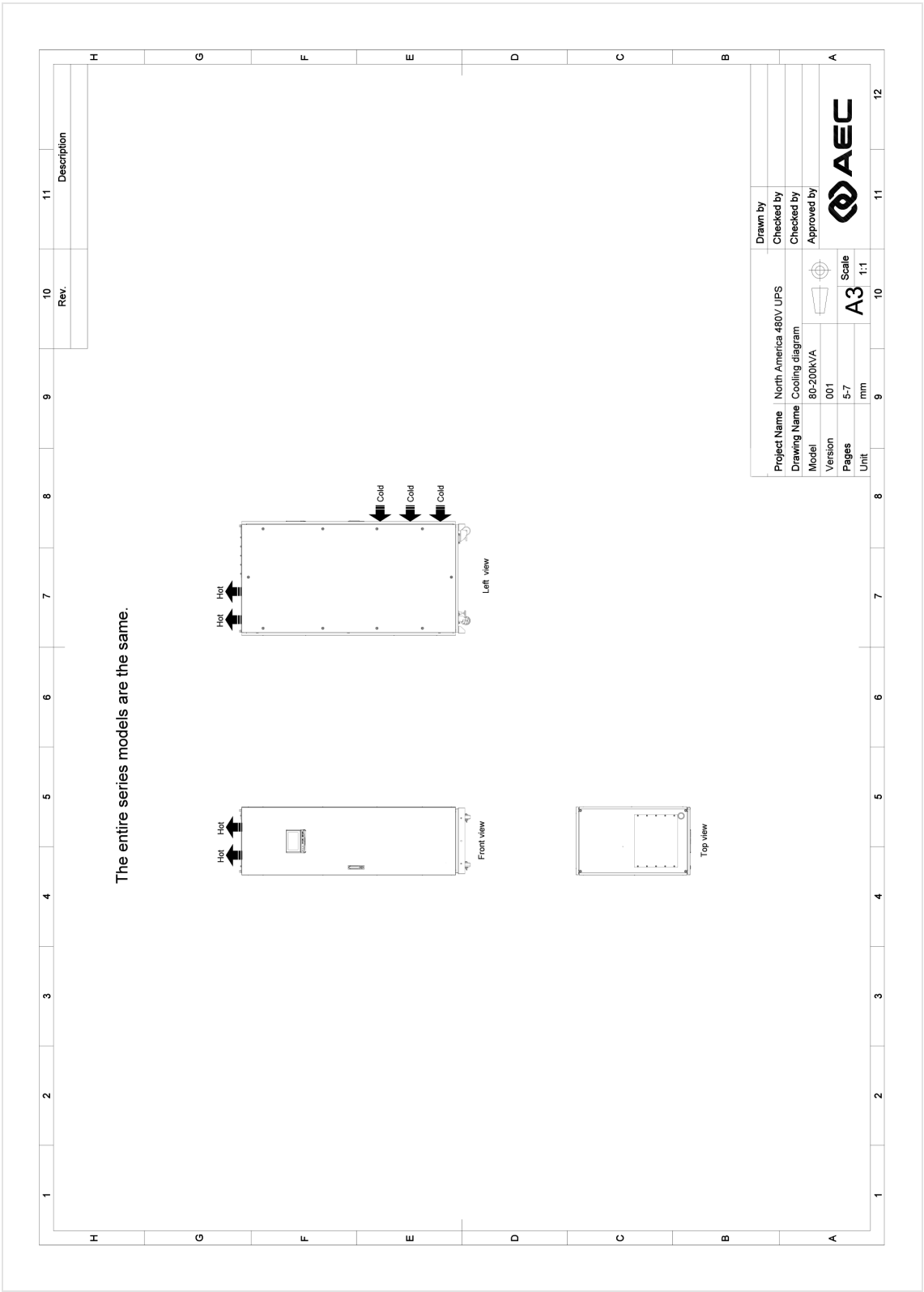

FIGURE E-5 Cooling: air in at the front, out at the top



FIGURE E-6 Wiring diagram 1: structure layout of the 135–200 kVA and 80–100 kVA cabinets, terminal positions with dimensions

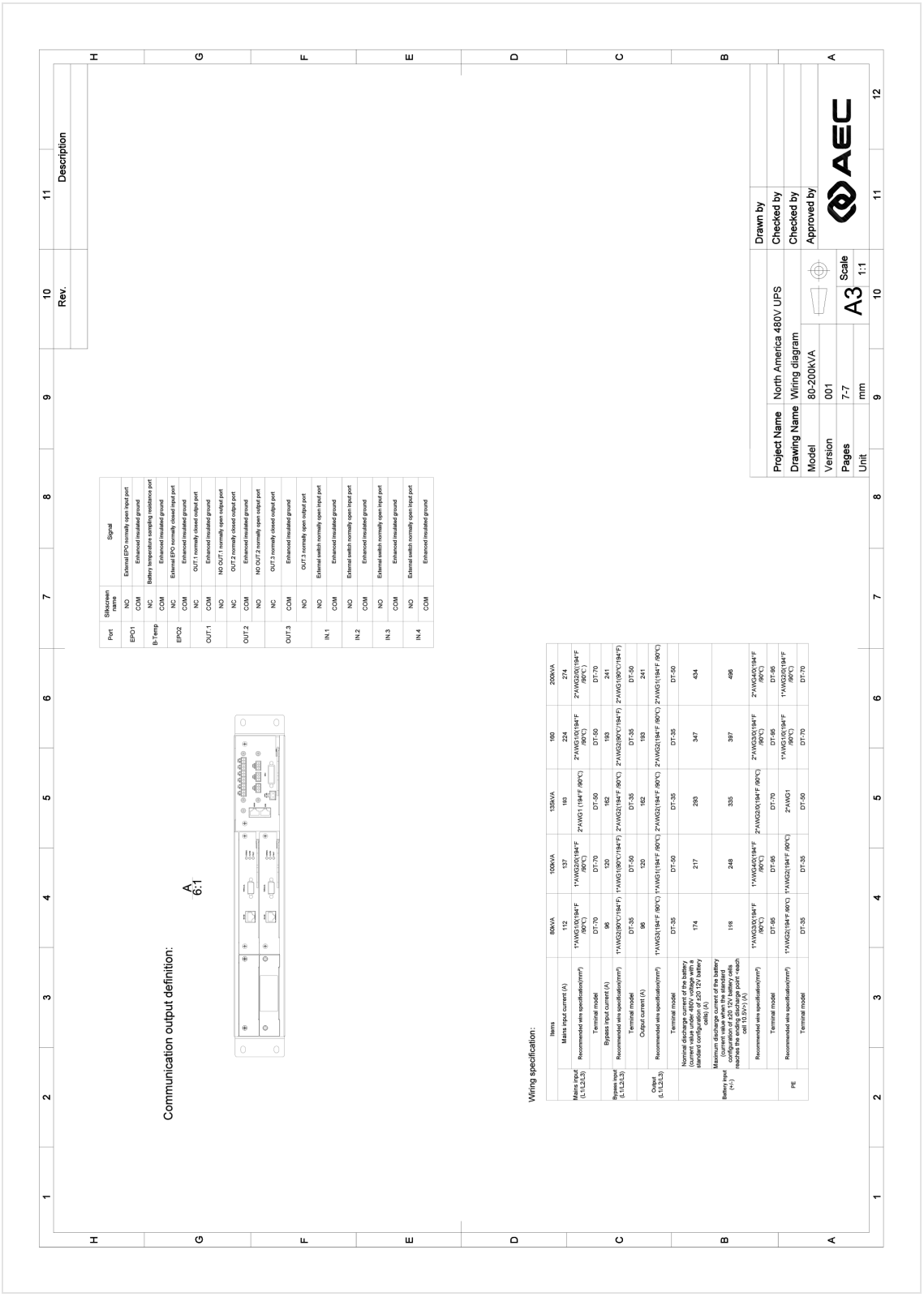

Port	Silkscreen letters	Signal
EPO1	NO	External EPO normally open input port
	COM	Enhanced insulated ground
B-Temp	NC	Battery temperature sampling resistance port
	COM	Enhanced insulated ground
EPO2	NC	External EPO normally closed input port
	COM	Enhanced insulated ground
OUT 1	NC	OUT 1 normally closed output port
	COM	Enhanced insulated ground
	NO	NO OUT 1 normally open output port
OUT 2	NC	OUT 2 normally closed output port
	COM	Enhanced insulated ground
	NO	NO OUT 2 normally open output port
OUT 3	NC	OUT 3 normally closed output port
	COM	Enhanced insulated ground
	NO	OUT 3 normally open output port
IN 1	NO	External switch normally open input port
	COM	Enhanced insulated ground
IN 2	NO	External switch normally open input port
	COM	Enhanced insulated ground
IN 3	NO	External switch normally open input port
	COM	Enhanced insulated ground
IN 4	NO	External switch normally open input port
	COM	Enhanced insulated ground

	Items	80kVA	100kVA	135kVA	160	200kVA
Mains input (L1/L2/L3)	Mains input current (A)	112	137	193	224	274
	Recommended wire specification(mm²)	1*AWG1/0(194°F /90°C)	1*AWG2/0(194°F /90°C)	2*AWG1 (194°F /90°C)	2*AWG1/0(194°F /90°C)	2*AWG2/0(194°F /90°C)
	Terminal model	DT-70	DT-70	DT-50	DT-50	DT-70
Bypass input (L1/L2/L3)	Bypass input current (A)	96	120	162	193	241
	Recommended wire specification(mm²)	1*AWG2(90°C/194°F)	1*AWG1(90°C/194°F)	2*AWG2(194°F /90°C)	2*AWG2(90°C/194°F)	2*AWG1(90°C/194°F)
	Terminal model	DT-35	DT-50	DT-35	DT-35	DT-50
Output (L1/L2/L3)	Output current (A)	96	120	162	193	241
	Recommended wire specification(mm²)	1*AWG3(194°F /90°C)	1*AWG1(194°F /90°C)	2*AWG2(194°F /90°C)	2*AWG2(194°F /90°C)	2*AWG1(194°F /90°C)
	Terminal model	DT-35	DT-50	DT-35	DT-35	DT-50
Battery input (+/-)	Nominal discharge current of the battery (current value under 480V voltage with a standard configuration of ≥20 12V battery cells) (A)	174	217	293	347	434
	Maximum discharge current of the battery (current value when the standard configuration of 20 12V battery cells reaches the ending discharge point <each cell 10.5V>) (A)	176	248	335	397	496
PE	Recommended wire specification(mm²)	1*AWG2(90°C/194°F /90°C)	1*AWG3(194°F /90°C)	2*AWG2(90°C/194°F /90°C)	2*AWG3(90°C/194°F /90°C)	2*AWG4(90°C/194°F /90°C)
	Terminal model	DT-95	DT-95	DT-70	DT-95	DT-95
	Recommended wire specification(mm²)	1*AWG2(194°F /90°C)	1*AWG2(194°F /90°C)	2*AWG1	1*AWG1/0(194°F /90°C)	1*AWG2/0(194°F /90°C)
	Terminal model	DT-35	DT-35	DT-50	DT-70	DT-70

FIGURE E-7 Wiring diagram 2: communication terminals of the system monitoring card and the wiring specification (factory values, see Table 4-4)

F

APPENDIX F

Frequently asked questions

Short answers to the questions AEC support hears most.

TABLE F-1 Frequently asked questions

Question	Answer
Should the UPS stay switched on?	Yes. Leave it on all the time: it protects the load and keeps the battery charged.
Is the output a pure sine wave?	Yes: the UPS is online double conversion, on utility and on battery.
What does N+1 mean?	One power module more than the load needs: if one fails, the others carry the load with no break (Section 3.1).
Can I add a power module later?	Yes: the modules are hot-swappable. Order it from AEC; AEC service updates the redundancy settings (Section 6.5.6).
What happens when the battery runs out?	The UPS switches its output off at the end of discharge, and restarts and recharges when the utility returns.
Can the UPS run from a generator?	Yes — see Section 3.3.
What is ECO mode?	The load runs on the bypass while the utility is good: higher efficiency, but no protection from disturbances. Use online mode for critical loads.
Does the UPS need a neutral?	No. INFINITE is a 3-wire + PE UPS. Loads that need 277 V or 120 V need a transformer after the UPS.
How do I monitor it on the network?	With the SNMP-L card — see Chapter 8.
How do I service it without dropping the load?	Use the external maintenance bypass — see Section 7.1.

G

APPENDIX G

Installation record

Fill this record in at installation and keep it with the UPS: it is the first thing AEC support asks for.

TABLE G-1 Installation record

Item	Value
Model and ordering code	
Serial number (rating label, Device info)	
Number of power modules (standard + redundant)	
Installation date	
Installed / commissioned by	
Site and room	
Utility, bypass and output breakers and conductors	
Battery type, blocks or cells, capacity (Ah), number of strings	
Battery breaker and conductors	
Parallel / BSC system: number of UPS, address of this UPS	
Output settings (voltage, frequency, mode)	
Dry contact assignments	
SNMP-L card IP address and admin password location	
Load at start-up (kW, %)	
Battery test result and date	

Service and support

AEC technical support is available 24 hours a day, 7 days a week. For help with installation, start-up, alarms, settings, spare parts, warranty claims and service visits, contact us by WhatsApp, phone or e-mail.

TECHNICAL SUPPORT · 24/7	**+1 786 553 2100**	WhatsApp and phone — always available
SERVICE E-MAIL	**service.us@aecups.com**	Technical questions, service requests, warranty claims
SALES	**sales@aecups.com**	
ADDRESS	**AEC UPS USA LLC**	4872 SW 72nd Ave, Miami, FL 33155
WEB	**aecups.com**	

When you contact us, have ready: the model and ordering code, the serial number (on the rating label and in Info manage › Device info), the alarm shown (Current fault), the load and the battery set-up — a photo of the touchscreen and of the label speeds things up on WhatsApp.