AEC
Technology Behind Power

USER MANUAL

IST3-J

1–3 kVA

Online UPS, single-phase, rack / tower



English

Read this manual before installing and using the UPS.
Keep it for future reference.

AEC-UM-IST3J-1-3-EN
Rev. 01 · 10/2026

OVERVIEW

Contents

About this manual 3

1 Safety Description 4
1.1 Safety Instructions 4
1.2 Operating Safety 7
1.3 Operation Environment Requirements 8

2 Overview 9
2.1 Product Intro 9
2.2 Appearance 10
2.3 Working Principles 17
2.4 Optional Component 21

3 Installation 22
3.1 Installation Notes 22
3.2 Installation Preparation 23
3.3 Transporting, Unpacking and Checking 24
3.4 Installation Procedures 25
3.5 Electrical Connection 31
3.6 Check the Installation 32

4 Operation Guide 33
4.1 Checking Before Startup 33
4.2 Startup Operation 33
4.3 Shutdown Operation 33

5 Maintenance and Troubleshooting 34
5.1 Maintenance Guide 34
5.2 Daily Battery Maintenance 34
5.3 Battery Replacement 35
5.4 Troubleshooting 41

6 Package, Transportation, Storage 43
6.1 Package 43
6.2 Transportation 43
6.3 Storage 43

A Technical Specifications 44
Dimensions and weights 45

B Acronyms and Abbreviations 46

BEFORE YOU START

About this manual

This manual describes the AEC IST3-J 1–3 kVA UPS: online UPS, single-phase, rack / tower. It covers the features, controls, installation, operation, maintenance, transport and storage. Read it before you start, and keep it with the UPS for future reference.



Rack, 2U Tower

0 ms transfer time, battery to mains mode	**230 V** output voltage
0.9 output power factor (1.0 optional below 30 °C)	**2U** 19-inch rack or tower, RS232 + USB

MODELS COVERED

- IST3-J 1000 VA, 2000 VA and 3000 VA, 2U rack / tower
- Optional battery box, 2U, for each model

WHO THIS MANUAL IS FOR

Installers, electricians, IT and facility staff who install, operate and maintain the UPS. Electrical installation and any work inside the UPS must be done by qualified personnel, in line with IEC 60364 and the local wiring rules.

Product standard: IEC 62040

Safety messages

Safety messages in this manual follow ISO 3864 / ANSI Z535. The signal word tells how serious the hazard is.

DANGER	A hazardous situation which, if not avoided, **will** result in death or serious injury.
WARNING	A hazardous situation which, if not avoided, **could** result in death or serious injury.
CAUTION	A hazardous situation which, if not avoided, could result in minor or moderate injury, or in damage to the equipment.
NOTE	Additional information that stresses or completes the text.
TIP	A hint that helps you solve a problem or save time.

Numbers in red circles on a picture are explained in the table or list that follows it. References in red, such as Figure 2-1 or Table 3-1, are links in the PDF. Figures are for reference only: the actual product may differ in detail.

Up and running

The short version: each step points to the full instructions. Read the safety chapter first.

1. **Read the safety instructions.** See Section 1.1, Safety Instructions.
2. **Unpack and check the delivery.** See Section 3.3, Transporting, Unpacking and Checking.
3. **Choose the place and prepare the cables and breakers.** See Section 3.2, Installation Preparation.
4. **Install and connect the UPS.** See Section 3.5, Electrical Connection.
5. **Start the UPS.** See Section 4.1, Checking Before Startup.
6. **Check the display and the settings.** See Section 2.3.2, UPS Parameters Setting (LCD).
7. **Look after the UPS.** See Section 5.1, Maintenance Guide.

CHAPTER 1

01 Safety Description

This chapter describes the safety instructions. Before performing any work on the device, read this manual carefully, follow the operation and installation instructions and observe all danger, warning and safety information, to avoid injury and damage to the device caused by incorrect operation.

IN THIS CHAPTER

1.1 Safety Instructions
1.2 Operating Safety
1.3 Operation Environment Requirements

AT A GLANCE **The safety rules of this chapter**



High voltage inside, also after the UPS is switched off: wait before opening it.



Installation, opening and service by qualified personnel only.



Batteries: never short-circuit them, keep them from fire, use only the specified type.



Electrostatic-sensitive boards: wear an earthed wrist strap.



Earth the UPS before connecting anything else.



No liquids or foreign objects inside the UPS.



In case of fire use a dry-powder extinguisher, never water or liquid.



Keep the air inlets and outlets free; respect the clearances.

1.1 Safety Instructions

This section describes the safety instructions for operation and maintenance. For details, refer to the safety instructions in the relevant chapters.

CAUTION

Before operating the device, read the safety instructions and operating instructions in this section carefully to avoid accidents.

The safety notices in this manual, such as "Danger", "Warning", "Caution", etc. do not cover all safety instructions. They only supplement the safety instructions for operation.

NOTE

Any damage to the device caused by violating the general safety requirements or the safety standards for design, production and use is not covered by the warranty.

1.1.1 UPS Safety

CAUTION

The input and output voltages of the device are hazardous. Touching them can be fatal. Before installing or operating the device, read this manual carefully and observe all warning labels on the device. Only authorized professionals are allowed to disassemble the device.

DANGER

Device damage or device failure may cause electric shock or fire!

- Before operating the device, check visually that it shows no damage or other potential danger.
- Check that the external devices and circuit connections are safe.

DANGER

During a thunderstorm, do not carry out any high-voltage or AC power work, or work on towers or masts. A thunderstorm generates a strong electromagnetic field: to protect the device from lightning, make sure the installation has adequate lightning protection and earthing in place.

WARNING

Do not connect unbalanced, half-wave rectified or inductive loads to the UPS output, such as air conditioners, blowers, motor starters, electric drills, motors or fluorescent lamps.

WARNING

Do not swap the earth and neutral conductors or the live and neutral conductors: this can cause a short circuit.

The device must be properly earthed, and the voltage between the neutral and earth conductors must be less than 5 V.

WARNING

Do not put fingers or tools into rotating fans: risk of injury or damage to the device.

WARNING

In case of fire, use a dry-powder extinguisher. Do not use liquid extinguishers: risk of electric shock.

CAUTION

Keep the air inlets, air outlets and the area in front of the fans free of objects, to ensure good ventilation.

CAUTION

Do not allow liquids or other objects to enter the device.

CAUTION

This is a Class A UPS product. In a residential environment it may cause radio interference, in which case the user may be required to take additional measures.

1.1.2 Battery Safety

⚠ CAUTION

Use only the specified batteries. Other batteries can damage the UPS.

Different brands and types of battery require different charging voltages. Before using a battery, make sure that the charging voltage of the UPS is suitable for it. If in doubt, consult AEC.

⚠ WARNING

Work on batteries must follow the battery instructions, especially for battery wiring. Incorrect work can damage the battery and even cause injury.

- Never short-circuit the battery positive (+) and negative (–) terminals. Tighten all battery connections securely. Never touch two battery terminals or bare wiring terminals at the same time: this can damage the battery or cause injury.
- Prevent electrolyte from leaking out of the batteries: leaking electrolyte corrodes metal parts and circuit boards, causing damage to the device and short circuits on the boards.
- Keep batteries away from fire and from any electrical equipment that can produce sparks, to avoid injury or damage.

1.1.3 ESD Protection

⚠ CAUTION

To prevent static electricity from damaging sensitive components on the circuit boards, wear an anti-static wrist strap with its other end properly connected to earth before touching them.

1.1.4 Grounding Requirements

⚠ WARNING

High leakage current! Connect the protective earth before making any other electrical connection. The earth terminal must be connected to earth.

- When installing the device, connect the earth first. When removing the device, disconnect the earth conductor last.
- Do not damage the earth conductor.
- The device must be permanently connected to the protective earth. Before operating the device, check the electrical connections to make sure that it is reliably earthed.

1.1.5 Measurement When Power On

⚠ CAUTION

Hazardous voltage is present inside the device. Touching it accidentally can cause electric shock. When taking measurements with the power on, wear protective equipment such as insulated gloves.

The measuring instruments must meet the following requirements:

- Their range and operating conditions meet the site requirements.
- They are connected correctly and according to standard practice, to avoid arcing.

1.2 Operating Safety

High temperatures and high voltages are present inside the UPS. During installation, operation and maintenance, comply with the relevant safety regulations and operating procedures to avoid injury or damage to the device. The safety instructions in this manual only supplement the local safety regulations.

⚠ CAUTION

Operation and wiring of the UPS must be carried out by qualified persons, to ensure that the electrical connections meet the relevant standards.

Before installation, operation or maintenance, installers must be properly trained, know all the safety instructions and know the correct operating methods.

⚠ DANGER

Do not connect or disconnect power cables until the power switch is off. Before wiring, make sure that the cables and cable labels match the actual installation.

⚠ WARNING

Touching high-voltage parts or lines, directly or through damp objects, can be fatal.

- Only authorized professionals are allowed to open the UPS. The input and output voltages of the UPS are hazardous. Touching them can be fatal.
- Before maintenance, disconnect the AC power and the battery to isolate all power inputs, and check the output terminals with a voltmeter to make sure that the power is disconnected and the UPS is safe.
- Even when all external power sources are disconnected, residual charge remains inside the UPS, and the output terminals may still carry a dangerous voltage. After disconnecting all power sources, wait at least 10 min for the internal capacitors to discharge before opening the UPS.
- The battery is not isolated from the AC input, so a hazardous voltage may be present between the battery terminals and earth. Treat the battery as live and keep it insulated during installation and use.
- Do not wear conductive objects such as watches, bracelets or rings while working.
- Installers must be qualified for high-voltage and AC power work. Maintenance and repair of the power system may only be carried out by qualified persons.
- High leakage current! Connect the protective earth before making any other electrical connection. The earth terminal must be connected to earth.

⚠ WARNING

Do not drill holes in the device. Drilling can damage internal components, and metal debris entering the device can short-circuit the circuit boards.

ⓘ NOTE

Any change to the system configuration, structure or components will affect UPS performance. Consult AEC before making any change.

1.3 Operation Environment Requirements

The operating environment affects the service life and reliability of the device. Do not use the device in the following places:

- Where the operating temperature or relative humidity is outside the technical specifications (operating temperature −5 °C to 50 °C, relative humidity 0–95 %).
- Where the device is exposed to direct sunlight or rain.
- Where there is vibration or impact.
- Where there is dust, corrosive material, salt or flammable gas.
- In closed or poorly ventilated places.

02

CHAPTER 2

Overview

This chapter describes the models, features, structure and working principles.

IN THIS CHAPTER

2.1 Product Intro
2.2 Appearance
2.3 Working Principles
2.4 Optional Component

THE UPS AT A GLANCE



Rack mounting: display and keys



Rear: sockets, battery and communication ports



Tower position, on its stands

2.1 Product Intro

The (1K-3K) UPS are fully high-frequency, true online, double-conversion intelligent UPS. They provide ideal power protection for file servers, enterprise servers, central servers, microcomputers, concentrators, telecom systems, data centres and other equipment that requires high-quality power. They are widely used in key business sectors such as postal services, finance, networks, stock exchanges and railways.

The (1K-3K) UPS have a single-phase AC input and a single-phase AC output.

2.1.1 Features

INTELLIGENT RS232 AND USB COMMUNICATION

With the standard RS232 or USB port and the UPS power management software, the computer can remotely monitor the UPS operating status and electrical data and switch the UPS on and off. An external SNMP network adapter (connected to the RS232 port) is also supported, so that the UPS can be managed over the network.

HIGH INPUT POWER FACTOR

Advanced active PFC technology reduces the load on the power grid, for environmentally friendly operation.

HIGH COST PERFORMANCE

Advanced power conversion and high-frequency PWM technologies provide high efficiency, small size and light weight, improve operating reliability and reduce cost.

PERFECT PROTECTION

Protection functions include output over-voltage, battery under-voltage, input over-voltage and triple over-current protection. They overcome typical weaknesses of high-frequency UPS, such as poor adaptability to the grid and low surge withstand capability.

LOW MAINS INPUT VOLTAGE

Thanks to independent rapid-detection technology, the battery does not discharge even when the mains input voltage falls to the lower limit of 120 V. In mains mode all output power is therefore taken from the grid, so that the battery stays fully charged, the number of discharges is reduced and the battery life is extended.

2.2 Appearance

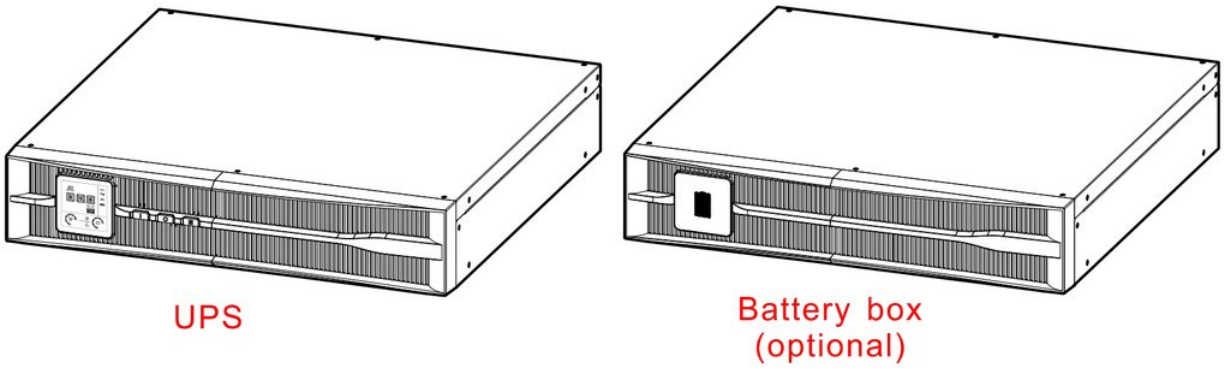

FIGURE 2-1 Appearance of 1000VA UPS

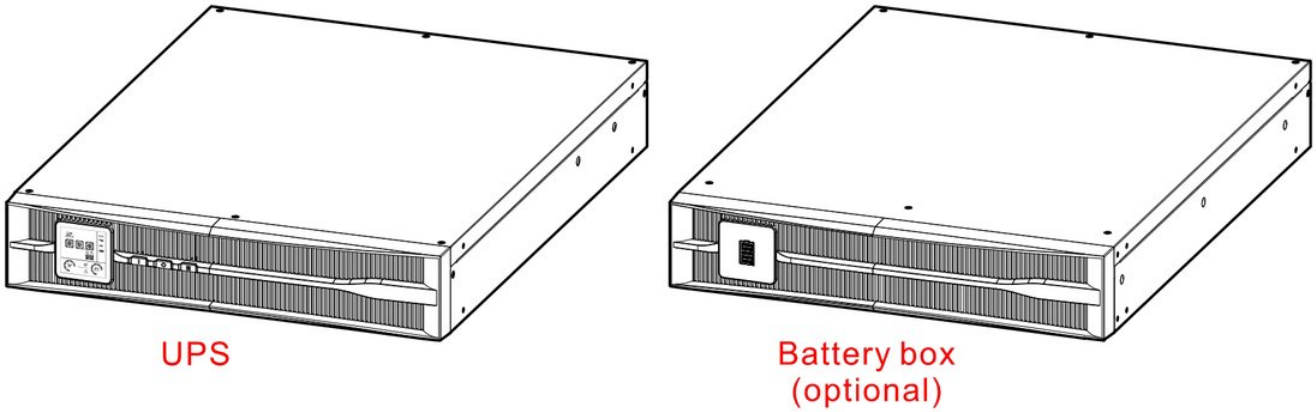

FIGURE 2-2 Appearance of 2000VA UPS / 3000VA UPS

2.2.1 Operation Panel

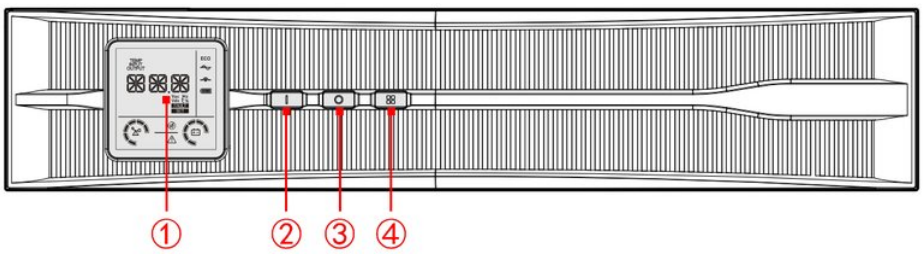

FIGURE 2-3 Operation panel of (1K-3K) UPS

TABLE 2-1 Operation panel description

No. Icon Name	II
- LCD	Displays the working status and settings of the UPS.

No.	Icon	Name	Illustration
		ON button	• When the UPS is off, press and hold the | button for 1 s to switch on the UPS. • When the UPS is on and in mains mode, press and hold the | button for 3 s to run a battery test. • When the UPS is on and in battery mode, press and hold the | button for 3 s to silence the buzzer (mains failure alarm). Press and hold the | button for 3 s again to cancel silence. When the UPS is on, in battery mode and with the battery low-voltage alarm active, press and hold the | button for 3 s to silence the buzzer. Press and hold the | button for 3 s again to cancel silence.
		OFF button	When the UPS is on, press and hold the ○ button for 1 s to switch off the UPS.
		SELECT button	• Press the **SELECT** button to scroll through the displayed information: output voltage, output frequency, input voltage, input frequency, battery voltage, internal temperature, load percentage, fault information, etc. • Press and hold the **SELECT** button for 5 s to enter the set page. Then press the **SELECT** button to scroll through the settings: ECO/INV mode, TWR/RCK mode (TWR: tower mounting; RCK: rack mounting; default RCK), charging current 1A/2A/3A/4A/5A/6A/7A/8A (default 1A) and inverter output voltage 208V/220V/230V/240V (default 230V), and press the **SELECT** button to confirm the setting.

LCD PANEL

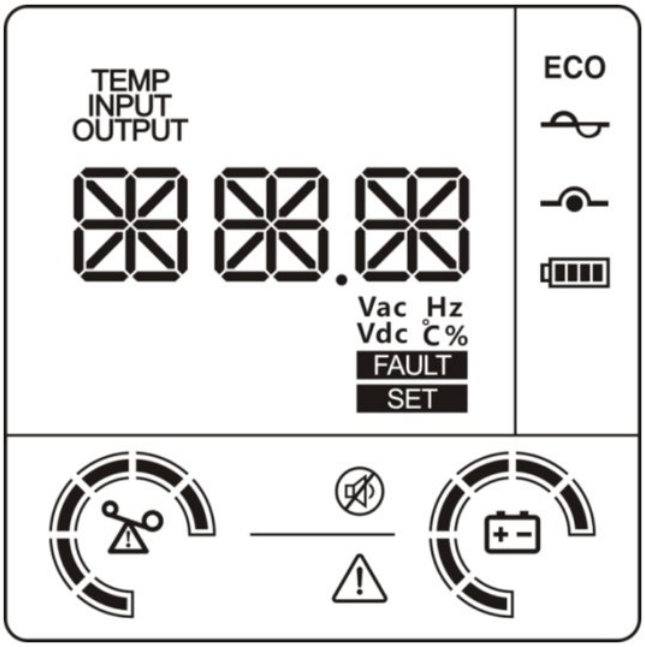

FIGURE 2-4 LCD panel (rack-mounting display)

TABLE 2-2 LCD panel description

No.	Icon	Illustration
1	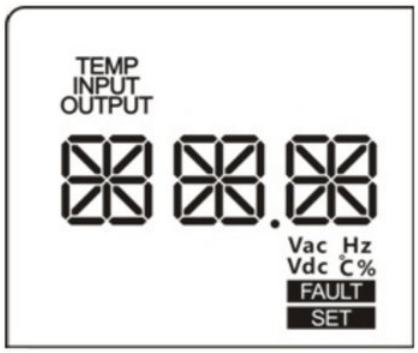	It shows input voltage, input frequency, output voltage, output frequency, load percent, temperature, fault code, parameters or working mode, etc.
2		UPS works in the mains mode
3		UPS works in the bypass mode
4		UPS works in the battery mode
5	ECO	UPS works in the ECO mode
6		Buzzer silenced
7		UPS failure

Display and keys: quick guide

The keys are marked with symbols: I (ON), O (OFF) and the four squares (SELECT). A key that must be held shows the time on its badge.

QUICK GUIDE **Switch the UPS on and off** Section 4.2 / 4.3

1



UPS off: it switches on

→

2



UPS on: it switches off

QUICK GUIDE **Read the measurements**

1



Each press: the next value on the LCD (output V and Hz, input V and Hz, battery V, temperature, load %, faults)

QUICK GUIDE **Battery test and buzzer**

1 — I ON — 3 s
Mains mode: starts a battery test

→

2 — I ON — 3 s
Battery mode or low battery: silences the buzzer

→

3 — I ON — 3 s
Again: the buzzer sounds again

QUICK GUIDE **Change a setting** Section 2.3.2

1 — SELECT — 5 s
Opens the set page

→

2 — SELECT
Scroll: ECO / INV, TWR / RCK, charging current 1–8 A, output 208–240 V

→

3 — I ON — > 1 s
Saves the setting and closes the page

Not confirmed within 20 s: the set page closes without saving. Defaults: RCK, 1 A, 230 V.

2.2.2 Rear Panel View

OUTPUT SOCKETS: 8 × IEC C13 (1000 VA), 8 × IEC C13 + 1 × IEC C19 (2000 / 3000 VA)

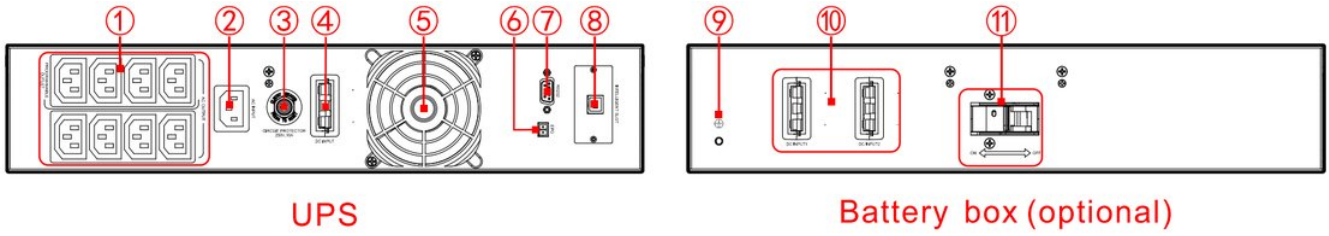

FIGURE 2-5 Rear panel of 1000VA UPS

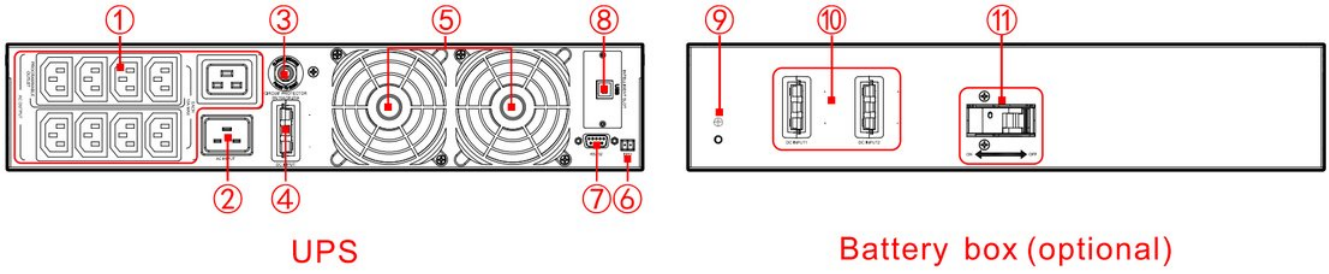

FIGURE 2-6 Rear panel of 2000VA UPS / 3000VA UPS

TABLE 2-3 Rear panel description

No.	Illustration
	Output outlet • General outlets: connect to critical loads. • Programmable outlets (optional): connect to non-critical loads.
	Input socket
	Over-current protector
	External battery port
	Cooling fan
	EPO connector
	RS232 communication port
	Intelligent slot • Standard: USB. • Optional: RS485+dry contact, protocol transfer card, SNMP card, and cover.
	Battery grounding port
	Battery input Battery breaker

2.2.3 Intelligent Slot

RS485 AND DRY CONTACT (OPTIONAL)

The pin layout and pin definition of the RS485 and dry-contact card are shown in Figure 2-7 and Figure 2-8.

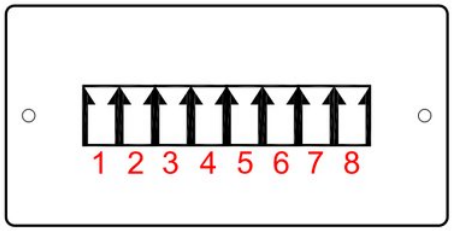

FIGURE 2-7 RS485 and dry contact

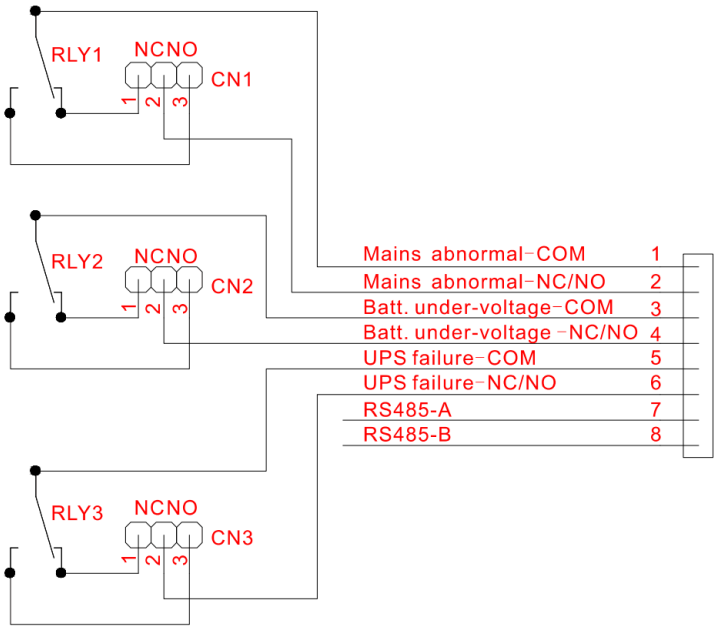

FIGURE 2-8 Pin definition of RS485 and dry contact

Dry-contact details:

1. Jumpers CN1, CN2 and CN3 set each dry-contact output to normally closed (NC) or normally open (NO). Default: NC (jumper on pins 1–2). To set an output to NO, move its jumper to pins 2–3.
2. Dry-contact signal limits: voltage less than 60 V DC or 42 V AC RMS; current less than 1.25 A.

PROTOCOL TRANSFER CARD (OPTIONAL)

The pin definition of the protocol transfer card is shown in Figure 2-9 and Table 2-4.

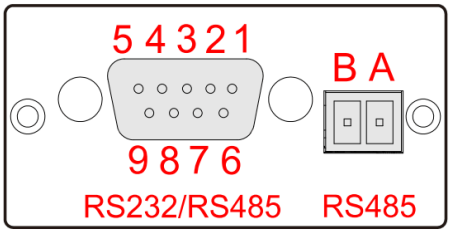

FIGURE 2-9 Protocol transfer card

TABLE 2-4 Pin definition of the protocol transfer card

Pin	Definition	Pin	Definition
9	RS232_RX	3	RS232_TX
8	/	2	RS232_RX
7	GND	1	RS485A1
6	RS232_TX	A	RS485_A2
5	GND	B	RS485_B2
4	RS485B1	/	/

> **NOTE**
> 1. The DB9 port can be used either as RS232 or as RS485, as required. Do not use RS232 and RS485 on the DB9 port at the same time. 2. The RS485 port is reserved for lithium battery communication.

SNMP CARD (OPTIONAL)

The SNMP card is installed in the UPS for remote management, as shown in Figure 2-10.

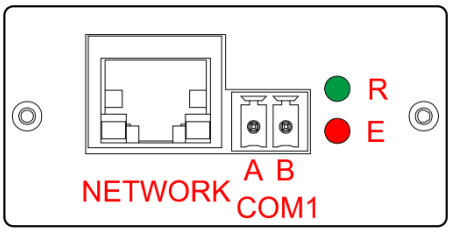

FIGURE 2-10 SNMP card

TABLE 2-5 SNMP card description

Name	Remark
NETWORK port	The NETWORK port is an RJ45 socket. The pin definition of the NETWORK port is shown in Figure 2-11.
COM1 port	Connects to the temperature/humidity sensor (RS485)
Indicator	Shows the working status

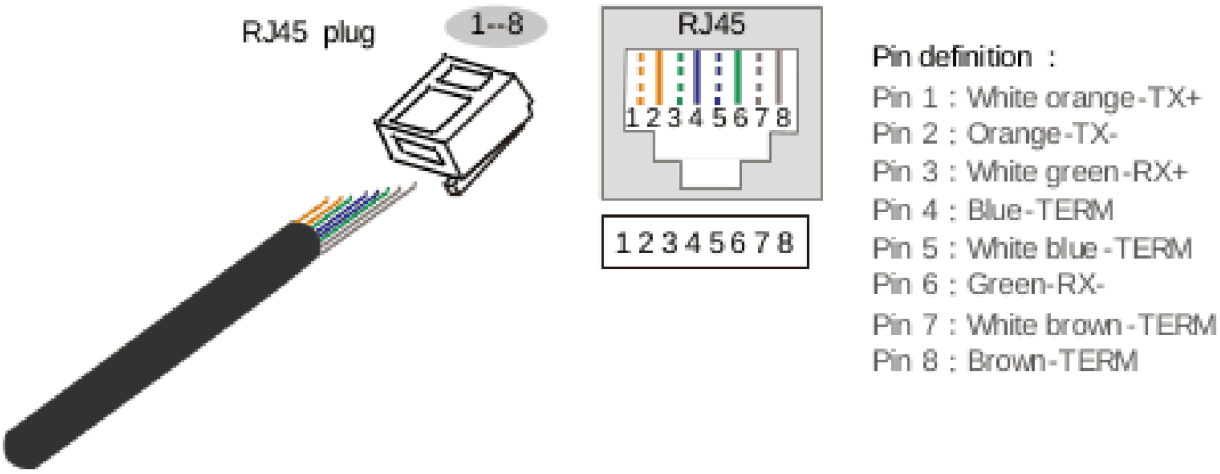

FIGURE 2-11 The pin definition of the NETWORK port

TABLE 2-6 SNMP card indicators

Green indicator (R)	Red indicator (E)	Status description
ON	ON	Start
Flicker	*	Running.
OFF/ON	*	Crashed (last state held)
*	OFF	No alarm
*	Flicker	Alarm

> **NOTE**
> * = any indicator state.

2.2.4 EPO Connector

The EPO contact is normally closed. Opening the two EPO terminals switches off the UPS output. To restore the output, close the EPO terminals again, switch the UPS off, and then restart it.

2.2.5 RS232 Communication

The pin assignment between the UPS RS232 port and the PC RS232 port is shown in Table 2-7.

TABLE 2-7 Pin assignment between the UPS RS232 port and the PC RS232 port

RS232 port of UPS	RS232 port of PC
9 (3)	2 (receiving end)
6 (2)	3 (transmitting end)
7 (5)	5 (grounding end)

2.3 Working Principles

HOW IT WORKS **Operating modes at a glance**

Normal (online) mode

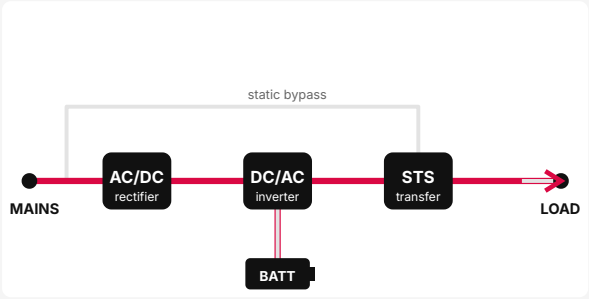

Mains present: the rectifier and the inverter supply the load with regulated power; the battery is kept charged.

Battery mode

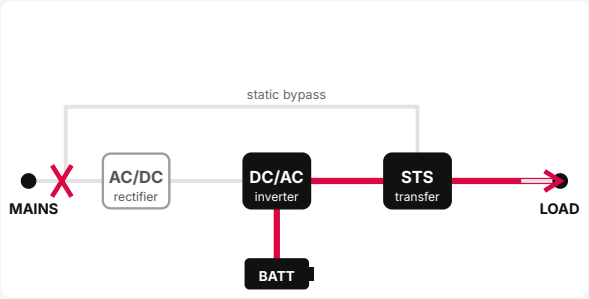

Mains outside its limits or missing: the battery feeds the inverter, with no break for the load.

Bypass mode

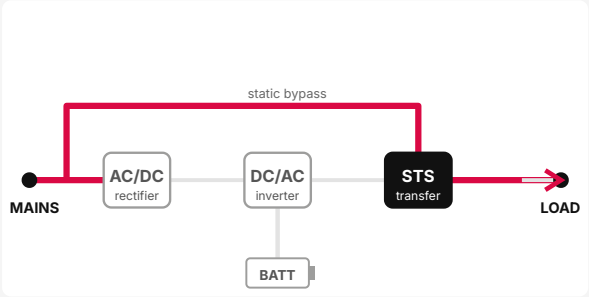

Overload, fault or inverter off: the load is supplied from the mains through the static bypass.

ECO mode

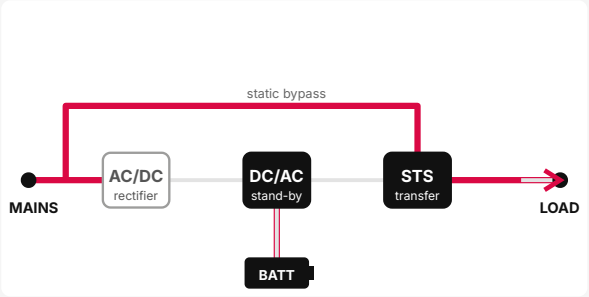

Mains inside the ECO window: the load runs on the bypass for the highest efficiency; the inverter takes over if the mains goes out of range.

power flow working idle

When mains power is present, the PFC stage converts the input of the (1K-3K) UPS into a stable ±360 V DC voltage, which feeds the DC/AC inverter (stable 230 V AC output) and charges the battery at the same time. When the mains fails, the DC/DC converter boosts the battery voltage to ±360 V DC for the inverter.

The working principle of the (1K-3K) UPS is shown in Figure 2-12. The DC/AC inverter uses a half-bridge topology and the DC/DC boost uses a push-pull or boost circuit. PFC is the active power factor correction circuit.

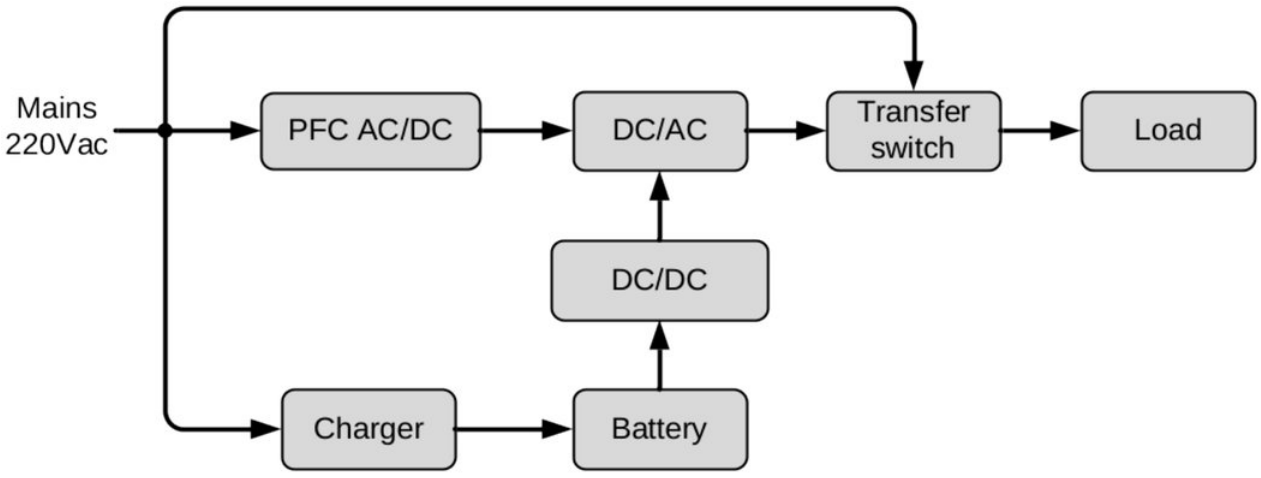

FIGURE 2-12 Working principle

2.3.1 Fault Status

UPS faults include: EPO protection, DC bus voltage fault, IGBT over-temperature fault, fan fault (including blocked fan, damaged fan, etc.), output fault (including output overload protection, output short-circuit, etc.), battery fault (including battery over-voltage protection, battery under-voltage protection, etc.) The corresponding fault displays on the LCD (rack-mounting display) are shown in Figure 2-13 to Figure 2-18.

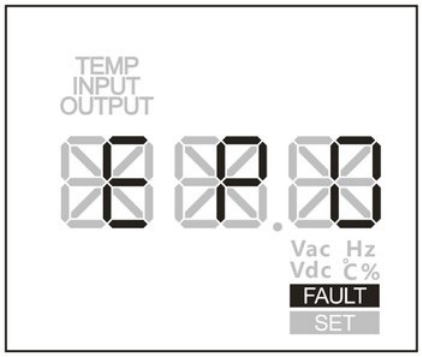

FIGURE 2-13 EPO protection

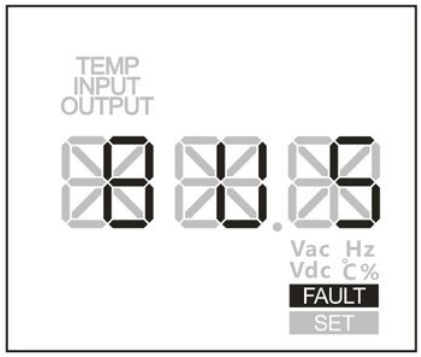

FIGURE 2-14 DC bus voltage fault

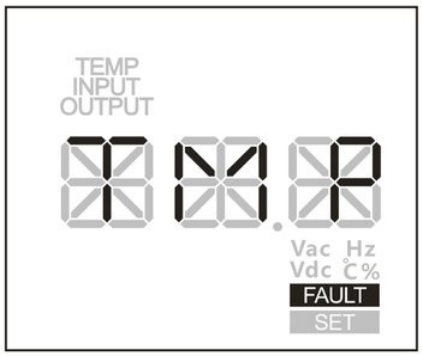

FIGURE 2-15 IGBT over-temperature fault

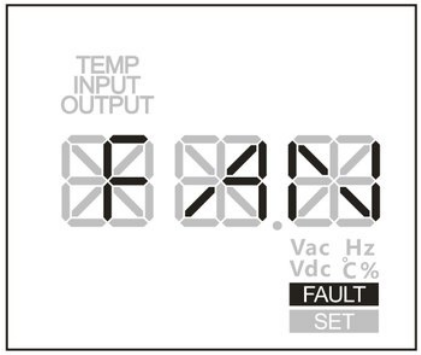

FIGURE 2-16 Fan fault

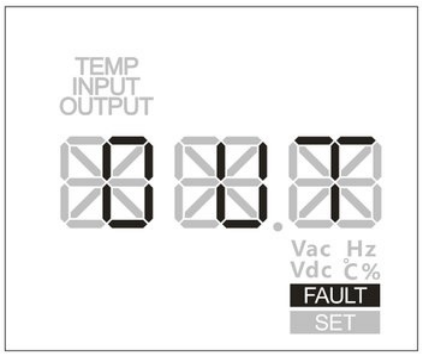

FIGURE 2-17 Output fault

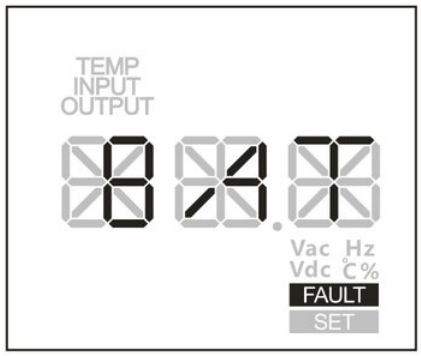

FIGURE 2-18 Battery fault

2.3.2 UPS Parameters Setting (LCD)

Press and hold the ⠿ button for 5 s to enter the set page. Then press the ⠿ button to scroll through the settings: ECO/INV mode, TWR/RCK mode (TWR: tower mounting; RCK: rack mounting; default RCK), charging current 1A/2A/3A/4A/5A/6A/7A/8A (default 1A) and inverter output voltage 208V/220V/230V/240V (default 230V), and press the ❙ button to confirm the setting.

ECO MODE

"ECO" set page: In the set page, the three characters "ECO" flash. To confirm the selection, press and hold the | button for more than 1 s; the setting is saved and the set page closes. If the selection is not confirmed, the set page closes automatically after 20 s. In ECO mode, the LCD display is shown in Figure 2-19.

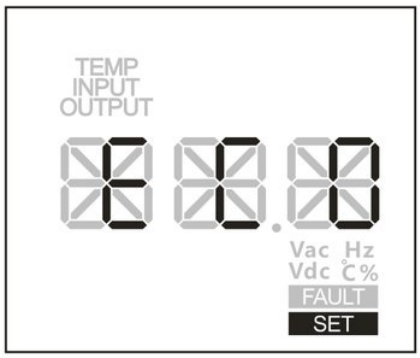

FIGURE 2-19 ECO mode

INV MODE

"INV" set page: In the set page, the three characters "INV" flash. To confirm the selection, press and hold the | button for more than 1 s; the setting is saved and the set page closes. If the selection is not confirmed, the set page closes automatically after 20 s. In INV mode, the LCD display is shown in Figure 2-20.

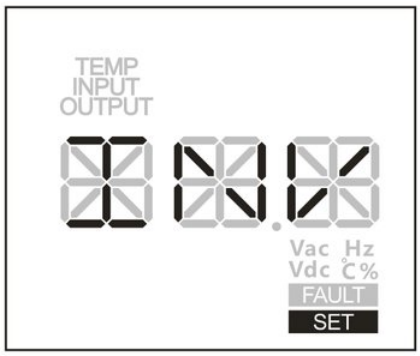

FIGURE 2-20 INV mode

RCK MODE

The default setting is RCK mode. To change from TWR to RCK mode: in the set page, the three characters "RCK" flash. To confirm the selection, press and hold the | button for more than 1 s; the setting is saved and the set page closes. In RCK mode, the LCD display is shown in Figure 2-21.

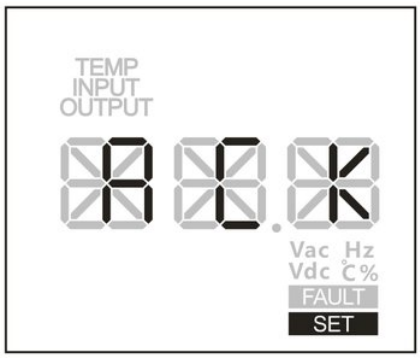

FIGURE 2-21 RCK mode

TWR MODE

To change from RCK to TWR mode: in the set page, the three characters "TWR" flash. To confirm the selection, press and hold the ❙ button for more than 1 s; the setting is saved and the set page closes. In TWR mode, the LCD display is shown in Figure 2-22.

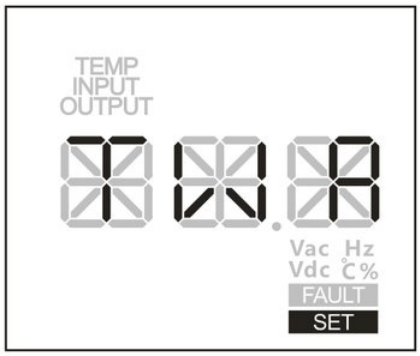

FIGURE 2-22 TWR mode

CHARGING CURRENT (OPTIONAL)

If the UPS is equipped with a charging module, the charging current can be set to 1A/2A/3A/4A/5A/6A/7A/8A (default 1A). To change it, select a charging current of 0.1 C to 0.2 C (recommended), where C is the capacity (Ah) of the installed battery. To confirm the selection, press and hold the ❙ button for more than 1 s; the setting is saved and the set page closes. The LCD display is shown in Figure 2-23.

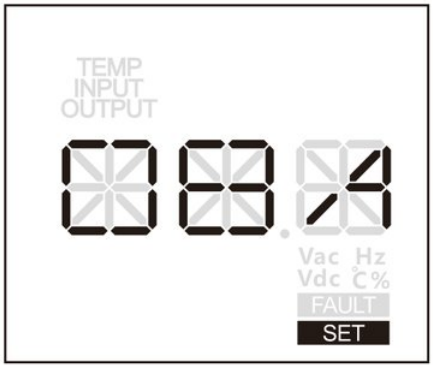

FIGURE 2-23 Charging current

INVERTER OUTPUT VOLTAGE

The inverter output voltage can be set to 208V/220V/230V/240V (the default setting is 230V). To change it, select the required inverter output voltage. To confirm the selection, press and hold the ❙ button for more than 1 s; the setting is saved and the set page closes. The LCD display is shown in Figure 2-24.

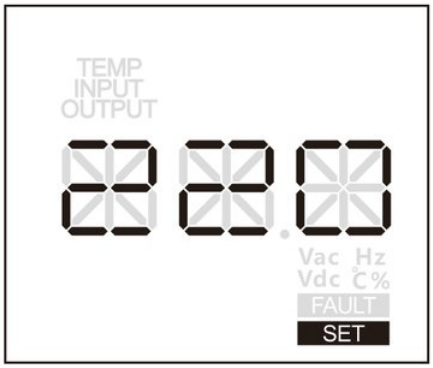

FIGURE 2-24 Inverter output voltage

2.3.3 UPS Parameters Setting (PC)

PROGRAMMABLE OUTLETS BACKUP TIME LIMITS SETTING

From the PC, set the backup time limit of the programmable outlets (for non-critical devices) in battery mode and in overload, from 0 to 999 min (default: 999).

CONVERTER MODE SETTING

Enable or disable converter mode (default: disabled). When converter mode is enabled, set the output frequency to 50 Hz or 60 Hz.

2.4 Optional Component

The (1K-3K) UPS can optionally be equipped with a battery box, programmable outlets and a charging module.

2.4.1 Battery Box

- Battery box for 1000VA UPS: 2 strings of 3 × 12 V 7 Ah batteries
- Battery box for 2000VA UPS: 2 strings of 4 × 12 V 9 Ah batteries
- Battery box for 3000VA UPS: 2 strings of 6 × 12 V 9 Ah batteries

2.4.2 Programmable Outlets

There are two kinds of output: programmable outlets and general outlets. Connect non-critical devices to the programmable outlets and critical devices to the general outlets. During a power failure, the backup time of the critical devices can be extended by setting a shorter backup time for the non-critical devices.

2.4.3 Charging Module (7A)

The (1K-3K) UPS can be equipped with a 7 A charging module that increases its charging capacity, so that batteries of different capacities can be charged quickly and battery life is extended.

03

CHAPTER 3

Installation

This chapter describes the installation: installation notes, preparation, unpacking and checking, installation procedures, electrical connection and installation check.

IN THIS CHAPTER

3.1 Installation Notes
3.2 Installation Preparation
3.3 Transporting, Unpacking and Checking
3.4 Installation Procedures
3.5 Electrical Connection
3.6 Check the Installation

ROADMAP **From delivery to operation**

1. **Read the safety instructions** — Section 1.1
2. **Unpack and check the delivery** — Section 3.3
3. **Choose the place and prepare the cables and breakers** — Section 3.2
4. **Install and connect** — Section 3.5
5. **Start** — Section 4.1
6. **Check the display and the settings** — Section 2.3.2
7. **Look after** — Section 5.1

3.1 Installation Notes

The (1K-3K) UPS is compact and can be placed directly on a flat surface without any fixing. Leave a clearance of at least 300–500 mm around the UPS and 500 mm above it for operation, maintenance and heat dissipation. Keep the UPS well ventilated. Battery life is longest at a room temperature of 20 °C, so air conditioning is recommended where possible. The installation notes are shown in Figure 3-1.

- Place the UPS on a flat floor (not on a sloping or uneven floor).
- Do not put objects on top of or around the UPS: they can block the air vents. Do not sit on the UPS.
- Do not place the UPS in direct sunlight, in the rain or in damp places.
- Do not place the UPS where there is corrosive gas.
- Do not place the UPS near fire or near electrical equipment that can produce sparks, to avoid injury or damage.

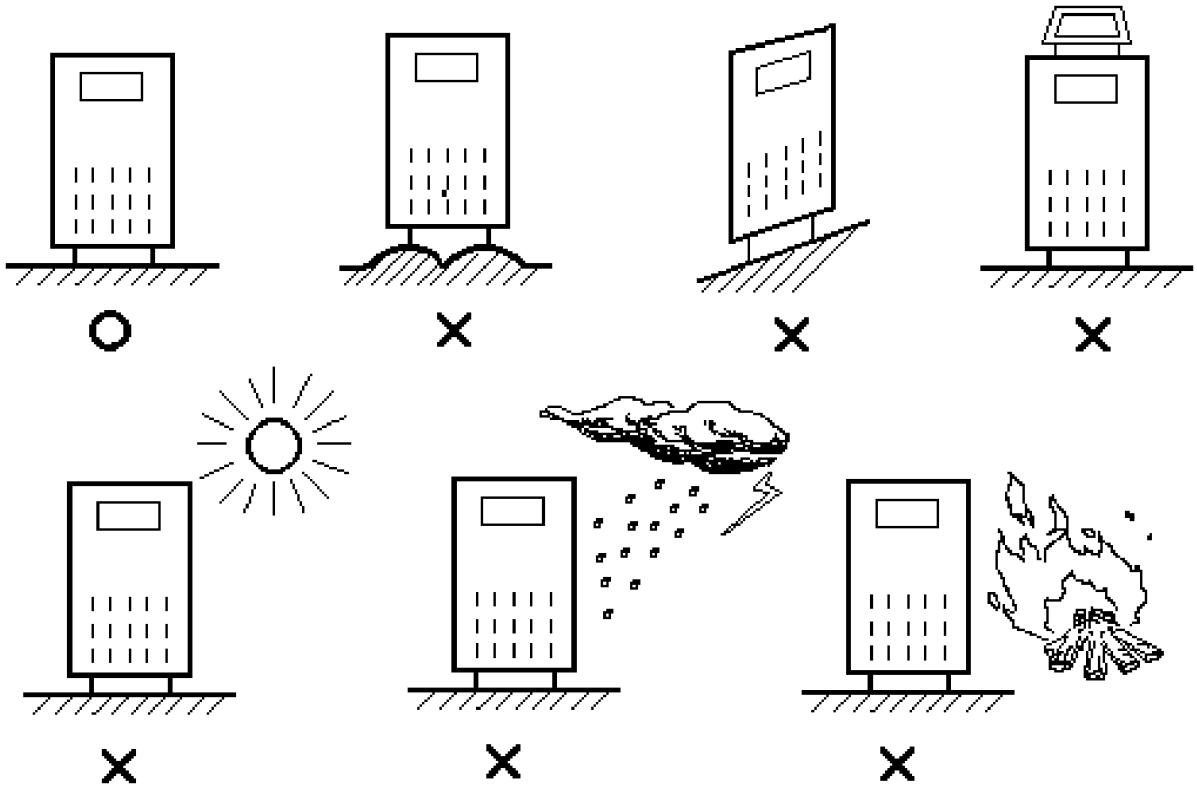

FIGURE 3-1 Installation notes

3.2 Installation Preparation

3.2.1 Installation Place and Environment Requirements

> **⚠ CAUTION**
>
> Before installing the UPS, make sure that the installation place and environment meet the basic conditions for safe and normal operation. If they do not, make the necessary changes. Install the UPS only when all the basic conditions are met.

INSTALLATION PLACE REQUIREMENTS

- The installation place must have fire-fighting equipment.
- The mains supply of the UPS must have the specified breaker or a suitable socket.
- Do not keep flammable or explosive materials in the installation place.
- Prepare the earthing before installing the UPS. The neutral-to-earth voltage of the mains must be less than 5 V.
- Building work at the installation place must be finished and the floor must be hardened. The installation place must be clean and dust-free.

INSTALLATION ENVIRONMENT REQUIREMENTS

- Operating temperature: −5 °C to +50 °C.
- Relative humidity: 0 % to 95 % RH, with no condensation.
- Cooling: air cooling.
- Operating altitude: as required by IEC 62040-3.
- Mounting: free of vibration, tilt not more than 5°.
- Pollution degree: II.

Install the UPS in a dust-free, well-ventilated place with suitable temperature and humidity. The recommended ambient temperature is 20–25 °C and the recommended humidity is about 50 %.

⚠ CAUTION

Do not install the UPS where there is conductive metal dust. The UPS is suitable only for non-tropical climates.

3.2.2 Input Breaker Selection

Install a breaker or a distribution box, rated for the UPS power, in the UPS input line to isolate it from the mains. To allow for the charging power and the inrush current at switch-on, the rated current of the breaker should be 1.5 to 2 times the maximum input current of the UPS. Do not use a breaker with residual-current (RCD) protection, because the UPS leakage current can cause nuisance tripping. The distribution box should be built by a qualified company. For the input breaker, see Table 3-1.

TABLE 3-1 Recommended input breakers for the (1K-3K) UPS

Model	1000VA UPS		2000VA UPS		3000VA UPS	
	Max. current	Recommended breaker	Max. current	Recommended breaker	Max. current	Recommended breaker
AC input(A)	6	10	12	20	18	32

3.2.3 Selection of the Cross-sectional Area of Wire

For the recommended cross-sections of the AC input, AC output and battery cables of the (1K-3K) UPS, see Table 3-2.

TABLE 3-2 Recommended cable cross-sections

Item ⌄	Model ›	1000VA UPS	2000VA UPS	3000VA UPS
AC input (Neutral/live)	Rated current (A)	4.8	9.2	13.6
	Cross-sectional area of wire (mm^2)	0.75	1.5	2.5
AC output (Neutral/live)	Rated current (A)	4.5	9.1	13.6
	Cross-sectional area of wire (mm^2)	0.75	1.5	2.5
DC input	Rated current (A) Cross-sectional area of wire (mm^2)	29.1 6	42.6 6	42.6 6
Ground	Cross-sectional area of wire (mm^2)	0.75	1.5	2.5

NOTE

The cables supplied are of good quality, meet safety requirements and are certified to international and UL standards. If you use your own cables, follow the cross-sections in Table 3-2, which apply to lengths up to about 5 m. Longer cables need larger cross-sections.

3.3 Transporting, Unpacking and Checking

3.3.1 Transporting

⚠ CAUTION

If the device weighs more than 18 kg, it should be carried by at least 2 people wearing protective equipment such as safety shoes and gloves.

3.3.2 Unpacking and Checking

Unpack the UPS and check the following:

- Inspect the UPS for shipping damage. If any is found, report it to the carrier immediately.
- Check against the delivery list that all accessories are present and correct. If there is any discrepancy, contact your AEC dealer immediately.

3.4 Installation Procedures

> **NOTE**
> The installation of the UPS and of the optional battery box is similar for the 1000VA, 2000VA and 3000VA UPS; the 1000VA UPS is used as an example below.

3.4.1 Rack-mounting

UPS INSTALLATION

PROCEDURE

1. Install the right plastic panel.

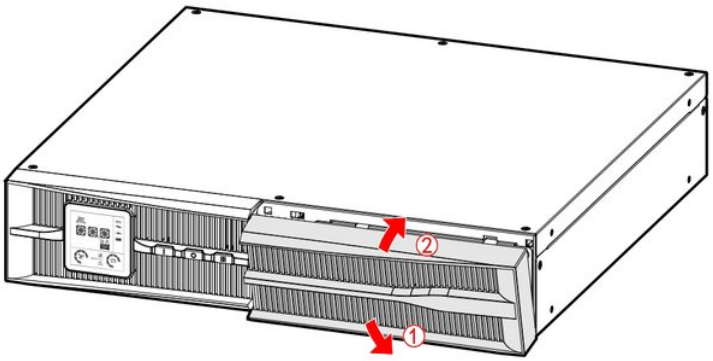

2. Fit the two mounting brackets to the UPS.

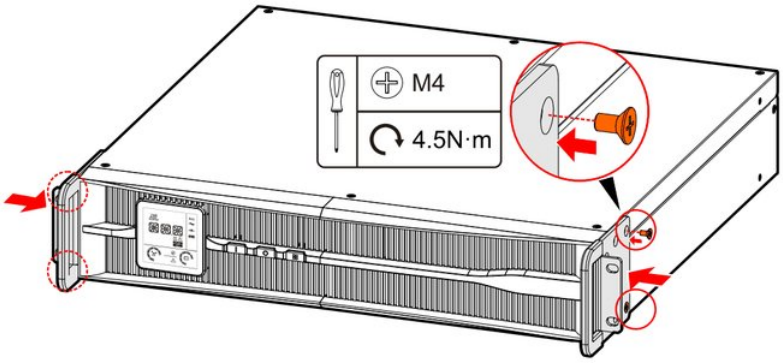

3. Push the UPS into the rack.

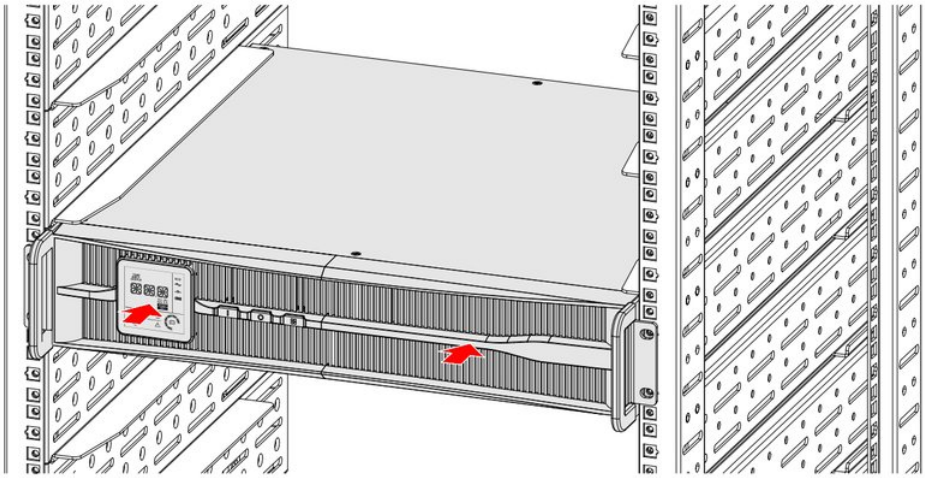

4 Fix the UPS to the rack.

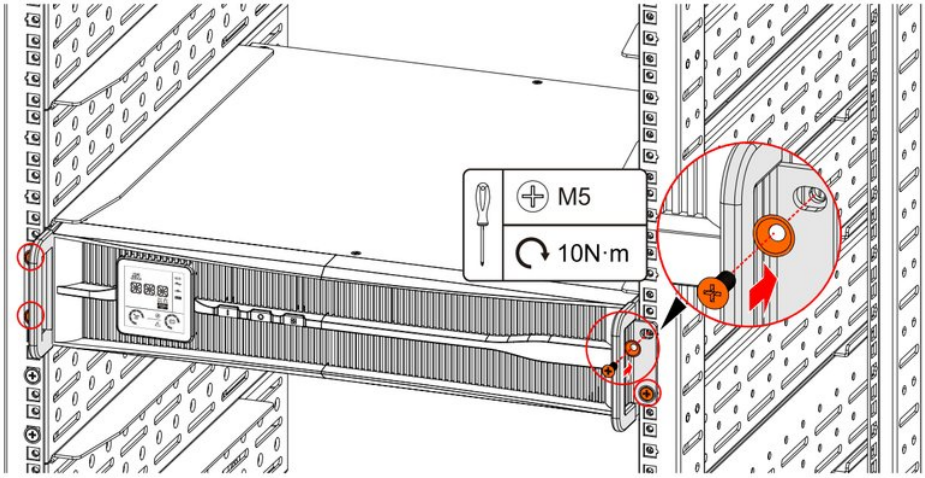

BATTERY BOX (OPTIONAL) INSTALLATION

> **NOTE**
> The procedure is the same for every battery box; one battery box is used as an example in this section.

PROCEDURE

1 Install the left and right plastic panels.

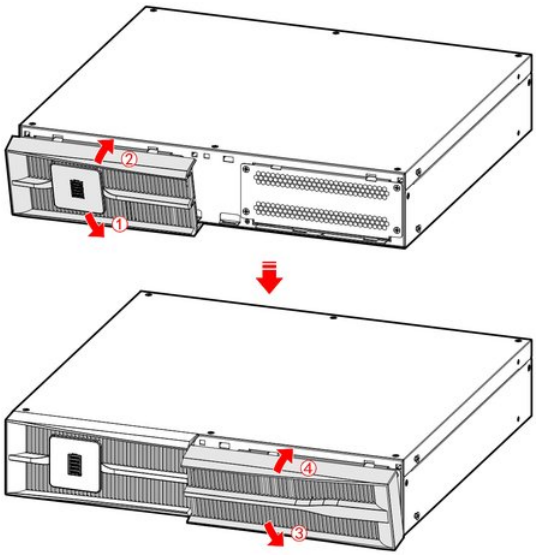

2 Fit the two mounting brackets to the battery box.

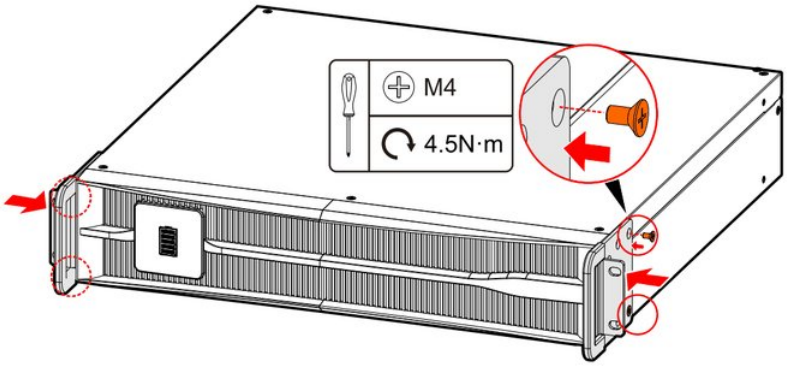

3 Fix the battery box (optional) to the rack.

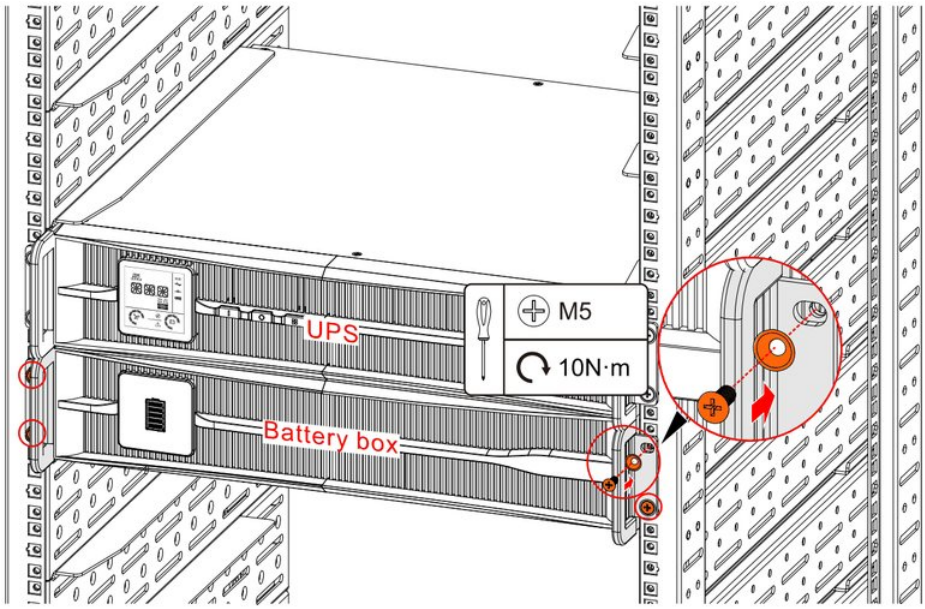

3.4.2 Tower-mounting

UPS INSTALLATION

PROCEDURE

1 Stand the UPS upright, with the battery side at the top.

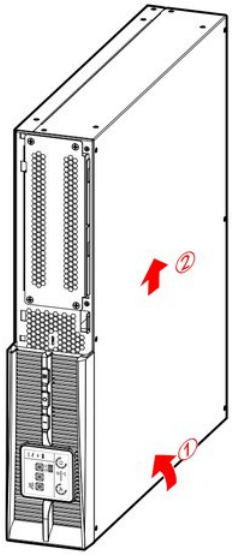

2 Assemble the support bases.

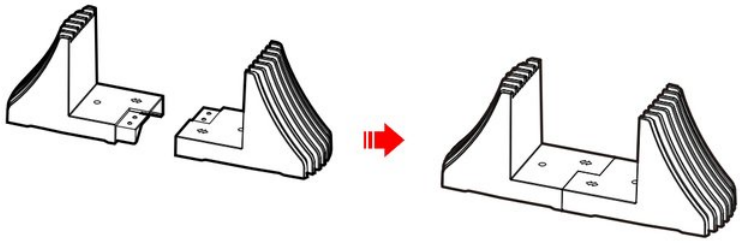

3 Fix the support bases to the UPS.

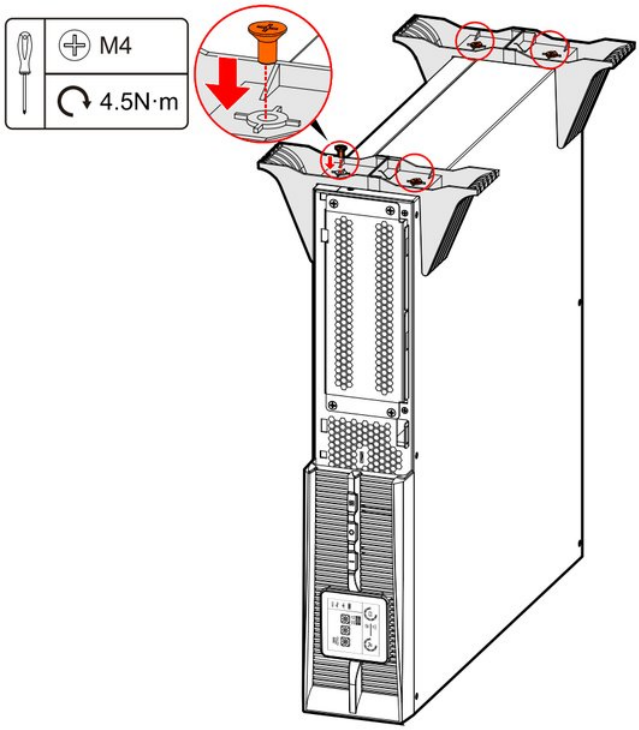

4 Place the UPS on the support bases, and then install the plastic panel.

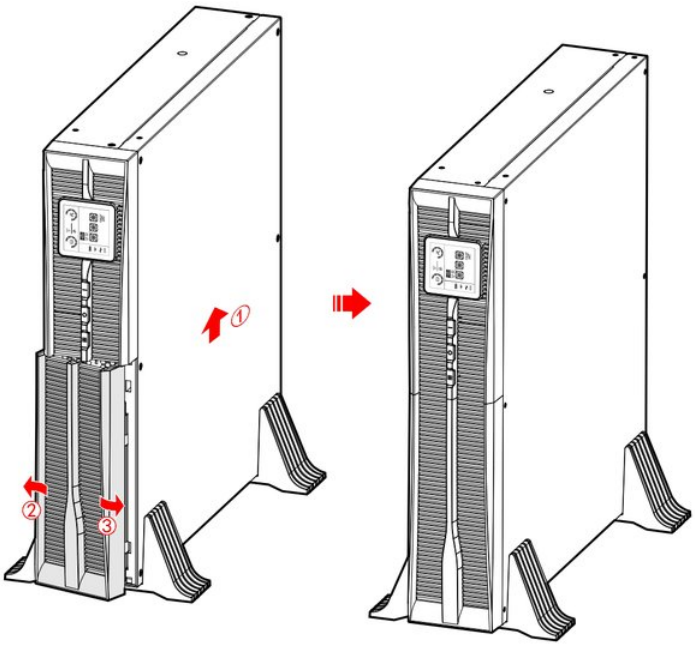

5 Set the display to tower mounting (TWR); for details, see 2.3.2 UPS Parameters Setting (LCD).

BATTERY BOX (OPTIONAL) INSTALLATION

> **NOTE**
> The procedure is the same for every battery box; one battery box is used as an example in this section.

PROCEDURE

1 Install the left and right plastic panels.

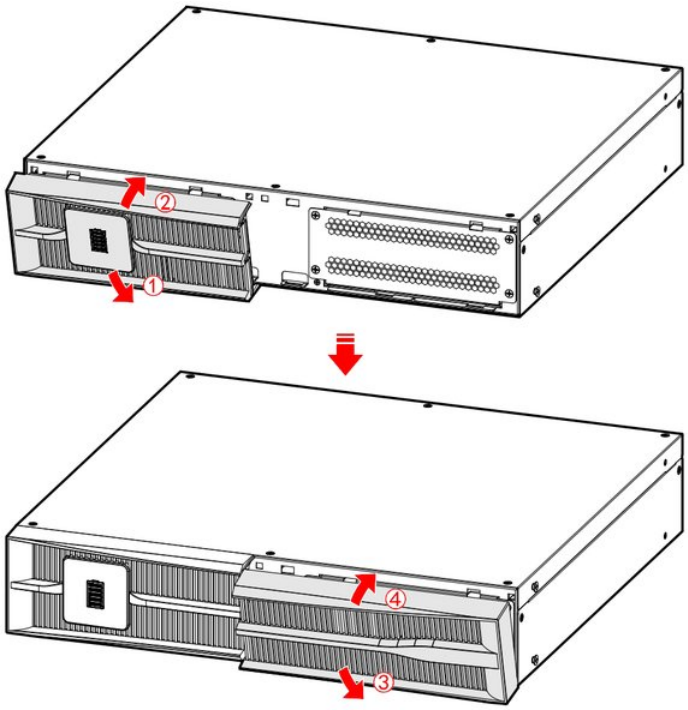

2 Take out the support bases and two 1U joint bases and assemble them.

> **NOTE**
> For each additional battery box, add two 1U joint bases; they are assembled in the same way.

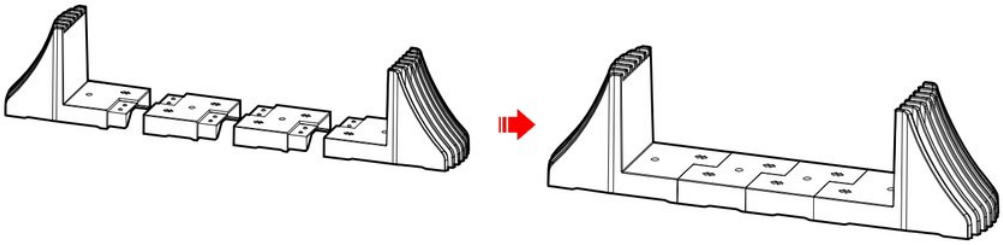

3 Place the UPS and the battery box on the assembled support bases.

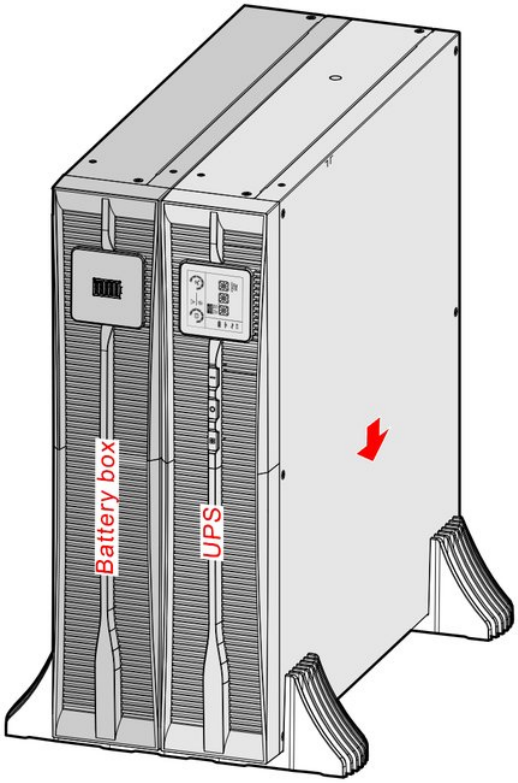

3.4.3 Intelligent Slot Replacement

PROCEDURE

1. Remove the standard intelligent slot card.

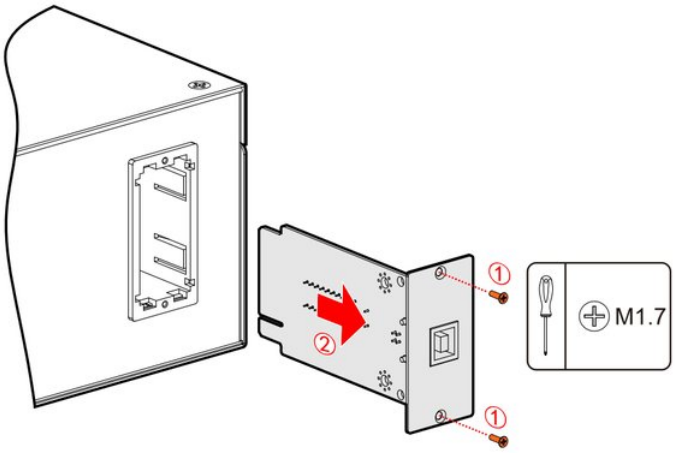

2. Install the optional intelligent slot card and fix it.

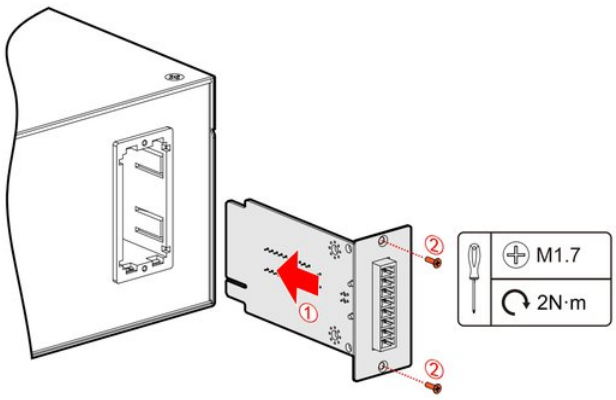

3 Connect the communication cable.

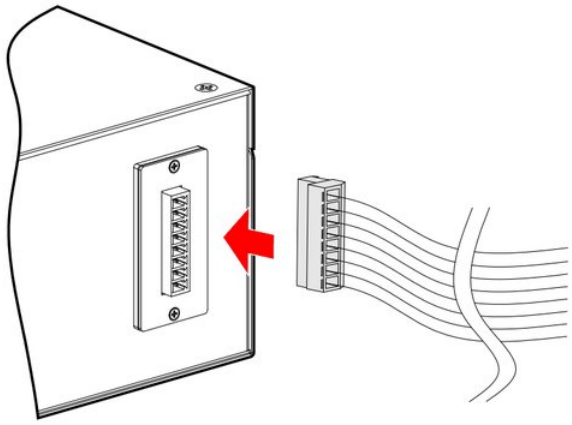

3.5 Electrical Connection

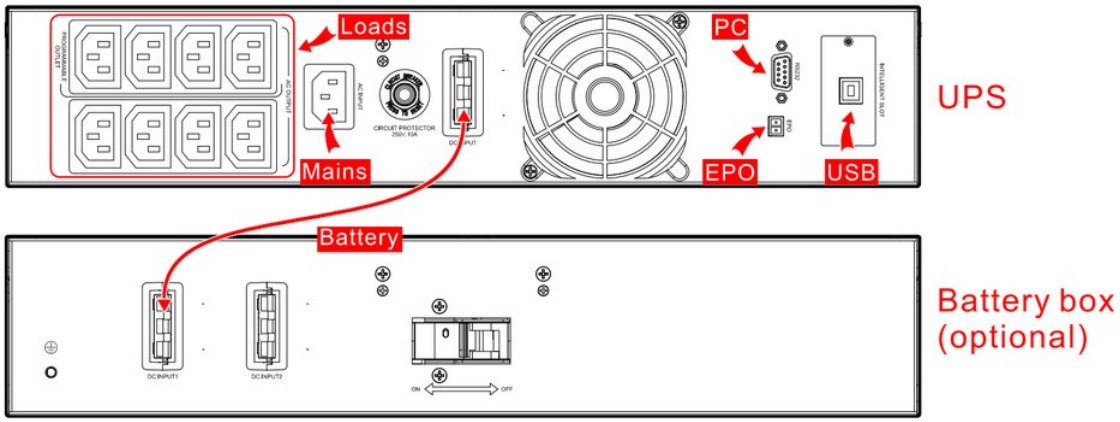

FIGURE 3-2 Wiring diagram of 1000VA UPS

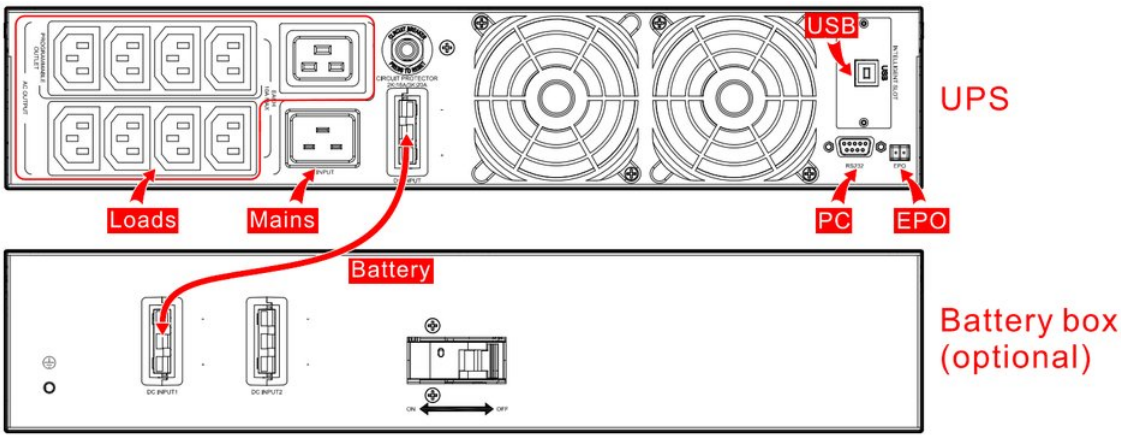

FIGURE 3-3 Wiring diagram of 2000VA UPS/3000VA UPS

⚠ CAUTION

The mains socket must be installed near the UPS and be easily accessible.

Do not load any 10 A output socket with more than 5 A.

3.6 Check the Installation

TABLE 3-3 Installation checking

No.	Check items	Result
1	Check that the AC input cable is firmly connected.	Yes☐No☐
2	Check the AC output cable: the conductor colours comply with the specification, the cross-section is suitable, the live (L), neutral (N) and protective earth (PE) conductors are connected correctly, and the cable is firmly connected.	Yes☐No☐
3	Check that the UPS earth conductor is reliably connected to the earth bar of the equipment room.	Yes☐No☐
4	Check that the neutral-to-earth voltage is less than 5 Vac.	Yes☐No☐
5	For long-backup models, check that the battery cable between the UPS and the battery box is connected correctly and securely.	Yes☐No☐
6	If remote monitoring is installed, check that the RS232 port is connected correctly.	Yes☐No☐
7	Check that the wiring is neat and the cables are tied in accordance with good practice.	Yes☐No☐
8	Check that the installation and wiring allow for future modification, expansion and maintenance.	Yes☐No☐

CHAPTER 4

04 Operation Guide

This chapter describes the checks before startup, and the startup and shutdown procedures.

IN THIS CHAPTER

4.1 Checking Before Startup
4.2 Startup Operation
4.3 Shutdown Operation

4.1 Checking Before Startup

Before using the UPS, check the following to make sure that it works normally.

- The input and output are installed correctly.
- The input is connected to a supply matching the rated input.
- There is no short circuit on the output, and the load does not exceed the UPS capacity.
- The computers and other loads are switched off.
- The battery voltage is normal.
- Do not connect inductive loads to the UPS output; supply them directly from the mains.

4.2 Startup Operation

PROCEDURE

1. Plug the UPS into the mains socket.
2. Press the | button on the panel for 1 s to start the UPS.
3. After about 10 s, when the UPS is running steadily, switch on the loads (PCs, etc.).

⚠ CAUTION

Switch on the loads in order from the highest power to the lowest ("high power device→small power device"), to avoid tripping the overload protection when a high-power device starts.

4.3 Shutdown Operation

PROCEDURE

1. Switch off the loads and leave the UPS running without load for about 10 minutes to cool down.
2. Press the ○ button on the panel for 1 s to shut down the UPS.
3. Unplug the UPS from the mains socket.

CHAPTER 5

05 Maintenance and Troubleshooting

This chapter describes maintenance, routine battery maintenance, battery replacement and troubleshooting.

IN THIS CHAPTER

5.1 Maintenance Guide
5.2 Daily Battery Maintenance
5.3 Battery Replacement
5.4 Troubleshooting

5.1 Maintenance Guide

Proper maintenance keeps the device in the best condition and extends its service life.

5.1.1 Safety Precautions

To ensure personal safety and protect the device, observe the following precautions.

- Remember that a dangerous voltage may be present inside the UPS even when it is not operating. Before maintenance, check the voltage with a multimeter and make sure that the UPS is completely shut down and safe.
- The operator must be familiar with the UPS and this manual.
- Before working on the UPS, remove conductive objects such as rings and watches.
- Observe the safety regulations strictly. If in doubt, consult qualified personnel.
- Before maintenance, use a voltmeter to check that the power is off and the UPS is safe.

5.1.2 Preventive Maintenance

To keep the UPS efficient and reliable, carry out the following maintenance tasks regularly.

- Keep the operating environment free of dust and chemical pollutants.
- Every six months, check that the input and output terminals are firmly connected.
- Check that the fans work properly and the air vents are not blocked. Replace any fan that has stopped working without delay.
- Check that the battery voltage is normal.
- Check that the UPS works normally.

5.2 Daily Battery Maintenance

- Battery charging requirements.
  - Before using the battery for the first time, switch on the UPS and charge the battery for ten hours. The UPS can be used during charging. If a mains failure occurs during this first charge, the backup time may be shorter than rated.
  - Normally, discharge and recharge the battery once every four to six months: discharge it to 1/3 of its capacity, then recharge it. Charge for at least ten hours.
  - In hot climates, discharge and recharge the battery once every two months. Charge for at least ten hours.
  - If the batteries are not used for a long time, discharge and recharge them once every three months. Charge for at least ten hours.
- Clean the battery cases with a damp cloth. Do not use oil or solvents such as petrol or thinners.

- To avoid explosion, keep batteries away from sources of fire and devices that can produce sparks.
- When the battery pack is connected to the UPS, check the charger regularly so that the battery is neither overcharged nor undercharged. Avoid deep discharge. After a discharge, recharge the battery fully, starting within 24 hours. Do not discharge a partly charged battery again: this reduces its capacity and can damage it.
- Press the ⏻ button to shut down the UPS, so that the battery does not discharge for a long time after a mains failure. If the UPS is out of use for a long time, discharge and recharge the battery periodically to avoid damage from self-discharge.
- The 1K model has no battery discharge time limit.
- The 2K/3K models have a battery discharge time limit:
  - Load < 75 %: no discharge time limit.
  - 75 % ≤ load < 100 %: T (min) = 18000 / (2 × L − 100) / 60, where L is the load in % (e.g. L = 75 gives T = 6 min; L = 100 gives T = 3 min).

> **NOTE**
> The battery discharge time is determined by both the battery capacity and the time limit function, with battery capacity having the highest priority.

5.3 Battery Replacement

5.3.1 Battery Replacement Safety

- Do not put batteries into fire: risk of explosion.
- Do not open or dismantle batteries: the electrolyte is harmful to skin and eyes.
- Dispose of used batteries through an authorized collection point in accordance with local regulations.
- Battery replacement should be carried out by qualified personnel.
- A new battery must be of the same capacity, model and manufacturer as the one replaced.
- Before touching the battery, check that there is no dangerous voltage between the battery terminals and earth. Never touch the two battery connectors or bare wiring terminals at the same time.

5.3.2 Battery Pack of UPS Replacement

> **NOTE**
> Battery pack replacement is similar for the 1000VA, 2000VA and 3000VA UPS; the 1000VA UPS is used as an example below. The battery pack is hot-pluggable.

PROCEDURE

1. Remove the right plastic panel.

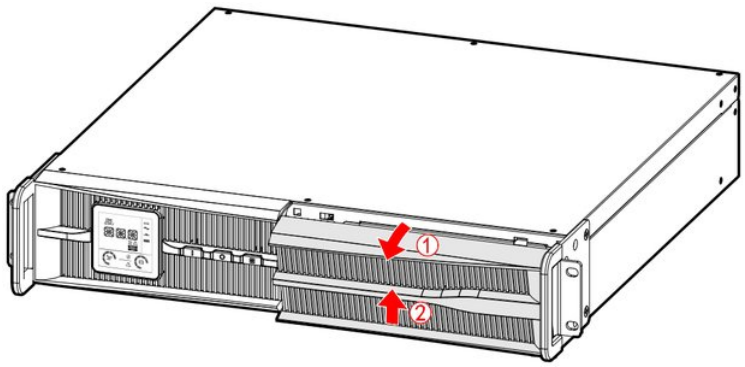

2. Remove the battery plate.

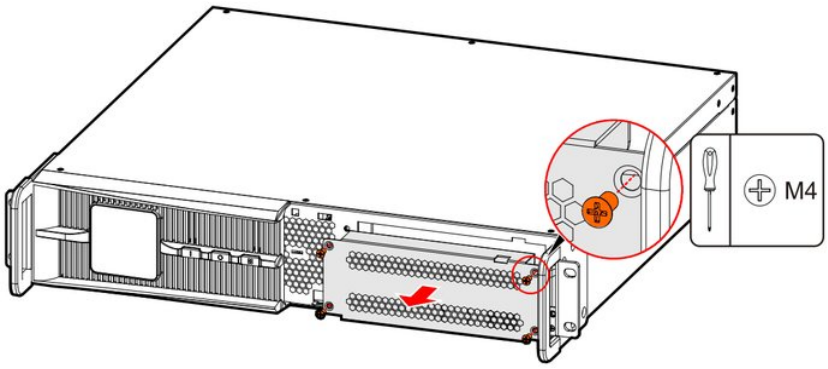

3 Unplug the battery cable.

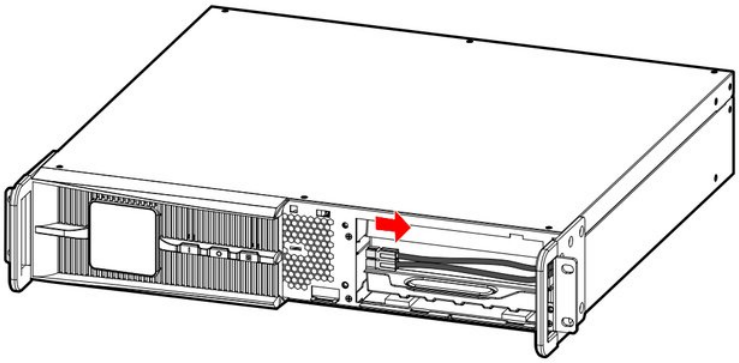

4 Pull out the battery pack.

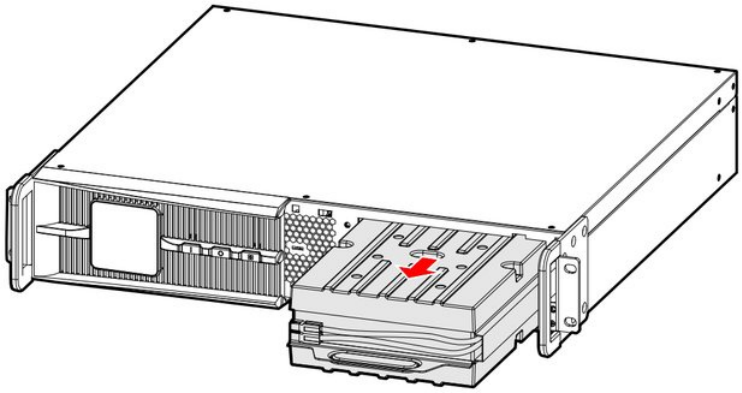

5 Push the new battery pack into the UPS.

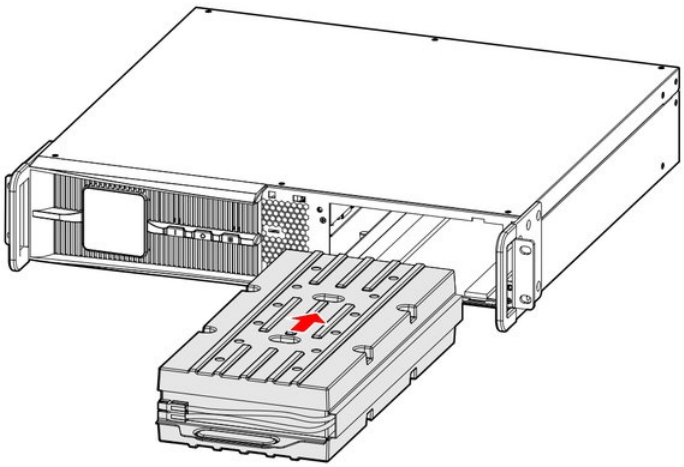

6 Plug in the battery cable.

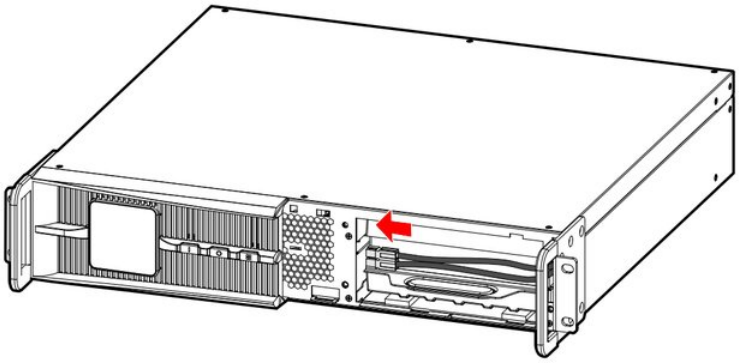

7 Install the battery plate.

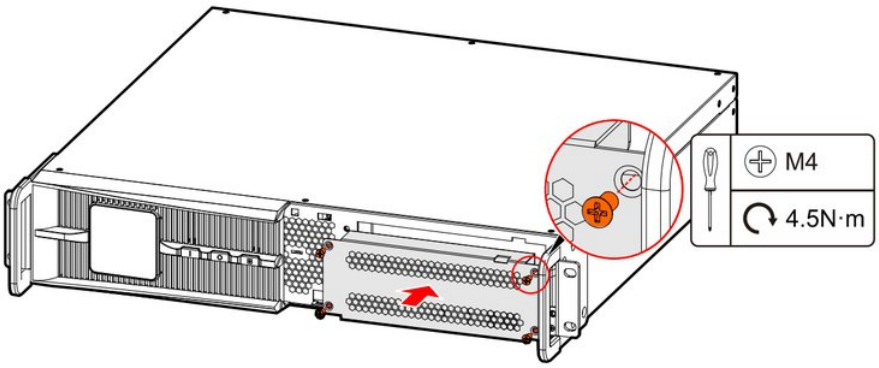

8 Install the right plastic panel.

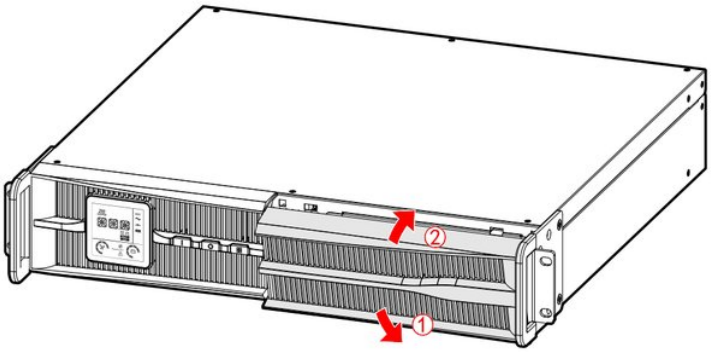

9 Finish battery pack installation.

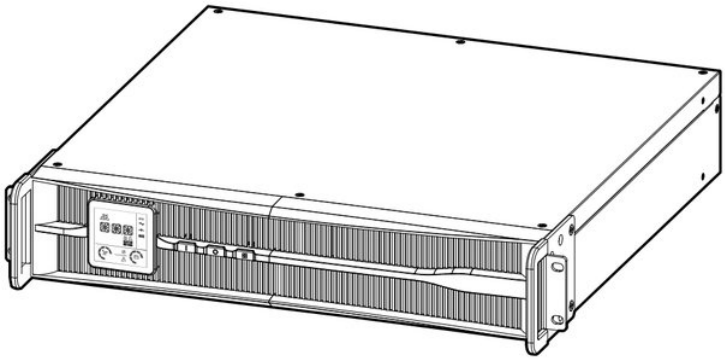

5.3.3 Battery Pack of Battery Box Replacement

> **NOTE**
>
> Battery pack replacement in the battery box is similar for the 1000VA, 2000VA and 3000VA UPS; the battery box of the 1000VA UPS is used as an example below. The battery pack is hot-pluggable.

PROCEDURE

1. Remove the left and right plastic panels.

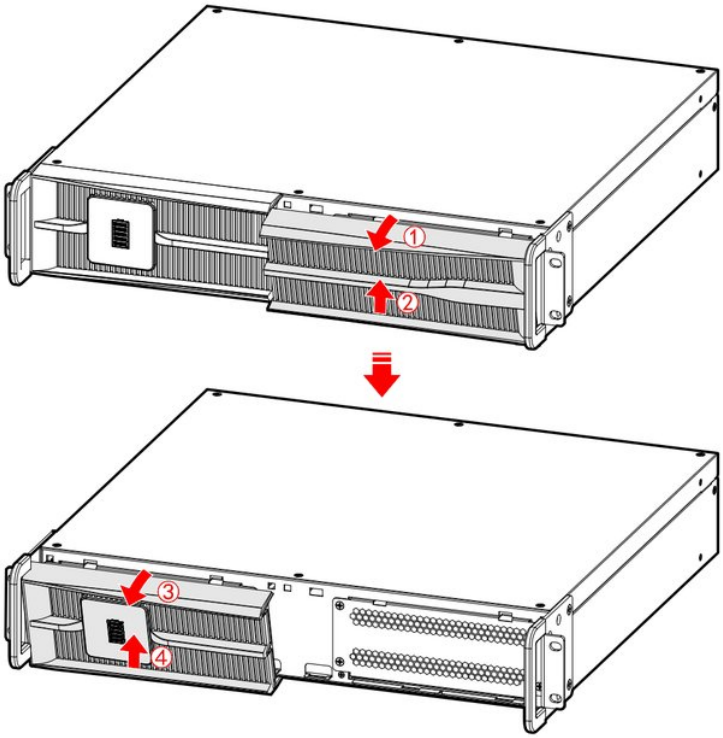

2. Remove the battery plate.

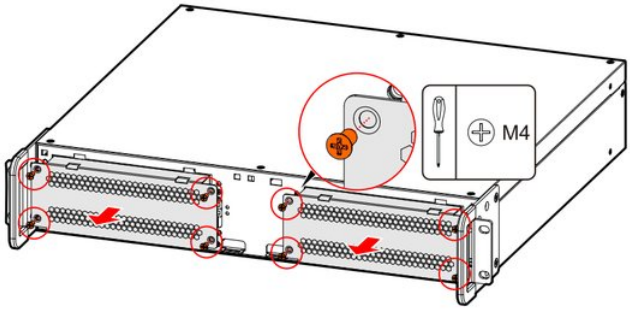

Battery box for 1000VA UPS

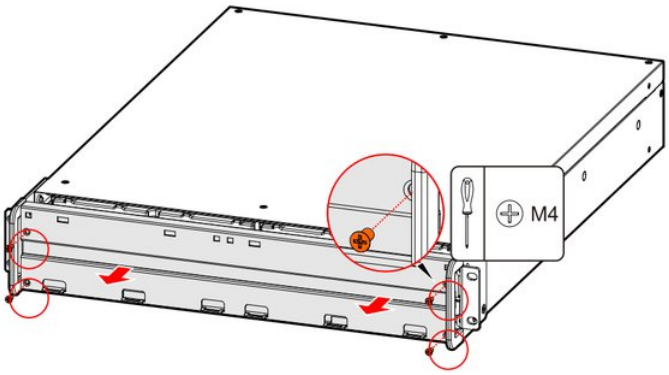

Battery box for 2000VA UPS/3000VA UPS

3. Unplug the battery cable.

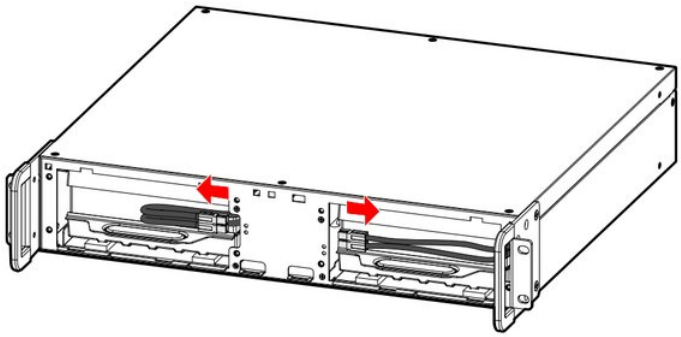

4 Pull out the left and right battery packs.

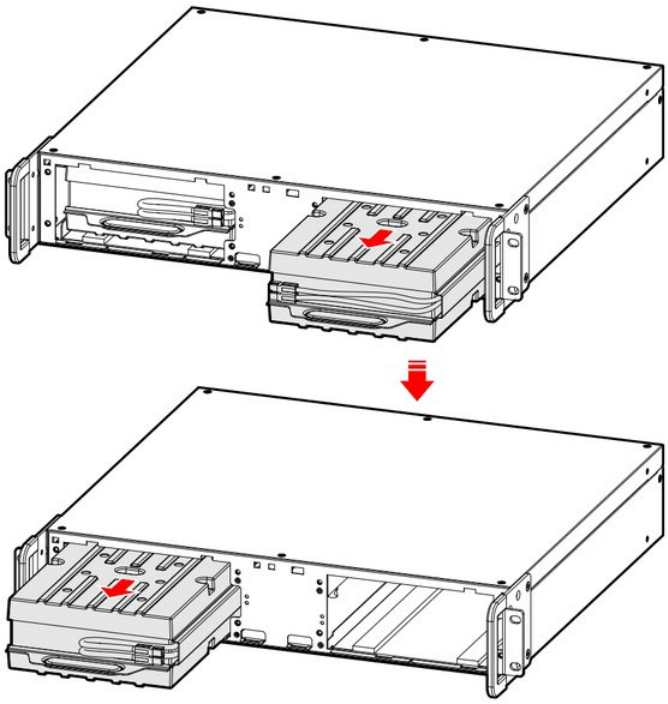

5 Push the new left and right battery packs into the battery box.

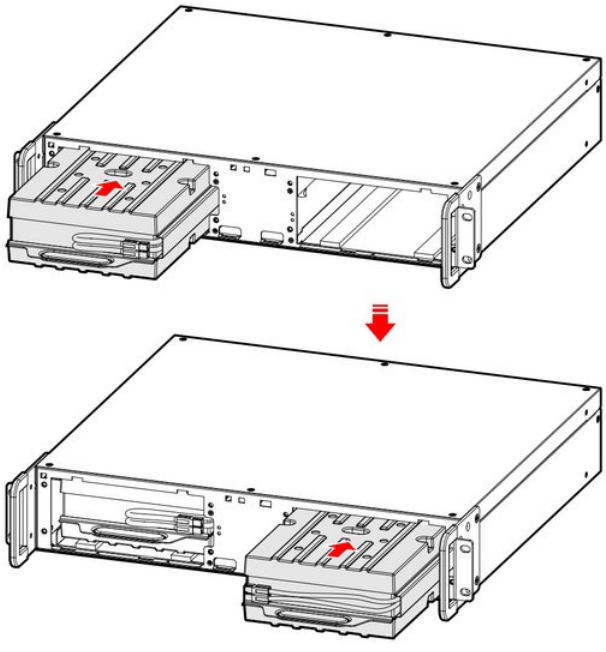

6 Plug in the battery cable.

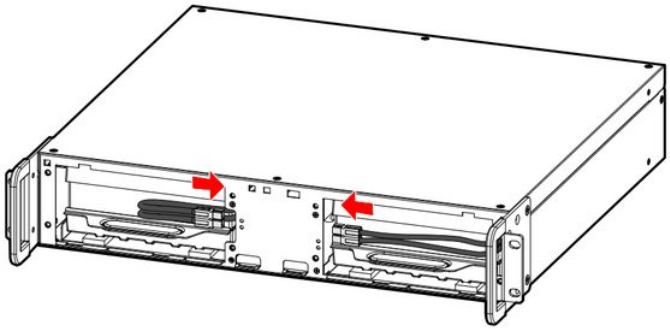

7 Install the battery plate.

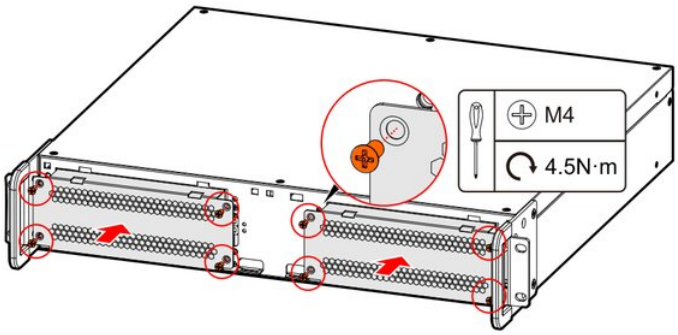

Battery box for 1000VA UPS

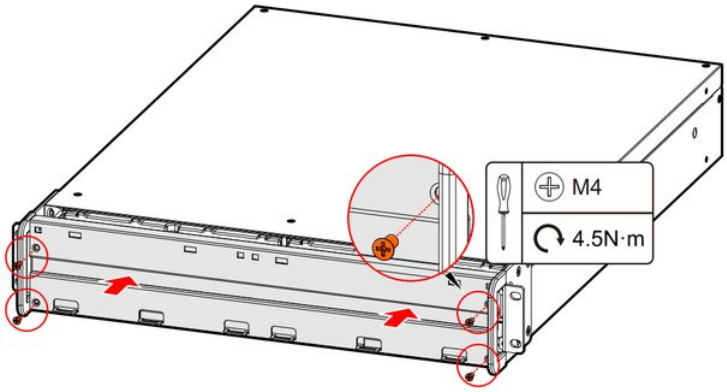

Battery box for 2000VA UPS/3000VA UPS

8 Install the left and right plastic panels.

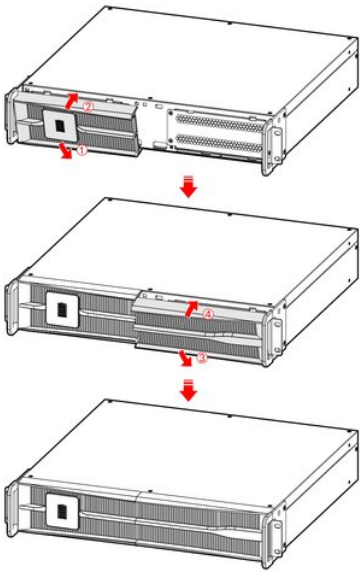

5.4 Troubleshooting

If the UPS does not work normally after startup, see Table 5-1 for possible causes. Also check whether the fault is caused by the environment (temperature or humidity outside the requirements) or by an overload.

Table 5-1 covers only simple diagnosis. If the cause is not clear or the problem is not solved, contact your AEC dealer or AEC technical support.

TABLE 5-1 Troubleshooting

No.	Phenomenon	Possible reasons
1	Mains power is present. The UPS starts and outputs 230V AC, but it runs in battery mode and the buzzer beeps intermittently.	Loose contact in the mains socket or wiring: the input supply is unstable.
2	After installation, switching on the breaker or pressing the " " button blows the fuse or trips the breaker.	The input wiring is wrong, e.g. neutral and earth or live and earth swapped; the same applies to the output.
3	The UPS starts and outputs 230V AC, but it runs in bypass mode (icon permanently on).	(1) The load exceeds the rated output capacity of the UPS. Reduce the load or choose a UPS with a larger output capacity. (2) A load inrush at startup can transfer the UPS to bypass temporarily; it recovers automatically. This is normal.
4	After startup the output is normal, but the UPS stops its output as soon as the load is switched on.	(1) Severe overload or output short circuit: reduce the load or find the cause of the short circuit. Common causes are a short-circuited power strip on the output or a damaged load with a short-circuited input. (2) The startup sequence "high power device → small power device" was not followed: restart the UPS and, when it runs steadily, switch on the loads again in that order.
5	After startup the UPS works normally, but after a while it shuts down automatically.	In battery mode it is normal for the UPS to switch off automatically when the battery is exhausted (battery low-voltage protection). When mains power returns, the UPS restarts automatically and charges the battery. Warning: Leaving the battery at low voltage for a long time shortens its service life. If the mains does not return for a long time after battery low-voltage protection, switch off the battery breaker to protect the battery, and restart the UPS to charge the battery when mains power returns.
7	Long beep, the fault icon is on, inverter failure and the UPS transfers to bypass mode.	(1) Overload or output short circuit: the UPS switches off automatically. (2) Driver or power transistor failure. (3) Main control board failure. (4) UPS over-temperature protection
8	After startup the UPS works normally, but when the mains fails there is no output.	(1) Battery failure. (2) Battery charger failure: the battery is not being charged. (3) The battery is not connected to the UPS or is badly damaged.
9	The input is normal, but the buzzer beeps intermittently.	The mains voltage or frequency is outside the UPS input range.
10	With a computer load everything works normally, but the computer stops when the mains fails.	Poor earthing: the neutral-to-earth voltage is too high.
11	The LCD is blank.	Loose wiring to the display board, or display board fault.

If the UPS has a fault, press the button to view the fault message on the LCD and find the cause quickly.

The fault symbols and buzzer signals are explained in Table 5-2.

TABLE 5-2 Fault symbols and buzzer signals

Fault symbol		Buzzer status	Meaning
Fault info. page (page up or page down by **SELECT** button)	EPO	Long beep	Emergency power off (EPO, if fitted) has been activated; bypass output and inverter output are both off.
	BUS	Long beep	DC bus voltage fault; the inverter output is off.
	TMP	Long beep	Over-temperature protection; the inverter output is off. Check whether the cooling fan is damaged or the air vents are blocked.
	OUT	Long beep	Output fault: check whether the output is short-circuited or the load is too high.
	BAT	Long beep	Battery fault: battery voltage too low or too high (protection).
	FAN	Rapid beep (Alarm once about every 0.2s)	Fan fault alarm; the inverter output will shut down for protection. Check whether the cooling fan is damaged.
Load energy bars all flash		Rapid beep (Alarm once about every 0.2s)	Output overload alarm: the output will shut down; reduce the load.
Battery energy bars all flash		Slow beep (Alarm once about every 2.0s)	Battery voltage too high: check the battery and the charger.
Battery energy bars are all off and the frame flashes		Rapid beep (Alarm once about every 0.2s)	Battery almost empty: save your data and shut down the connected equipment.

CHAPTER 6

06 Package, Transportation, Storage

This chapter describes packaging, transportation and storage.

IN THIS CHAPTER

6.1 Package
6.2 Transportation
6.3 Storage

6.1 Package

The product is packed in a carton. When packing, observe the orientation requirements. One side of the carton carries the warning symbols (keep dry, handle with care, this way up, stacking limit, etc.); the other side carries the model label, etc.

6.2 Transportation

Handle the UPS with care during transport and avoid severe impacts. Always keep it in the orientation shown on the carton, to avoid damage.

6.3 Storage

Store the UPS in a dry warehouse, out of sunlight and rain, in the orientation shown on the carton. Storage temperature: −25 °C to +55 °C (without batteries). For UPS units with internal batteries, and for spare batteries, the recommended storage temperature is 0–40 °C at 20–80 % RH. The store must be free of toxic gases, flammable or explosive materials and corrosive chemicals, and free of strong vibration, impact and strong magnetic fields. Under these conditions the storage period is six months. For longer storage, charge the batteries every three months.

APPENDIX A

A Technical Specifications

Index ⌄	Model ›		1000VA UPS	2000VA UPS	3000VA UPS
Input features	Voltage range (V)		176–295 Vac: up to full load (above 75 %); 154–176 Vac: up to 75 % load; 120–154 Vac: up to 50 % load.		
	Frequency range (Hz)		40/70±10%(40/70 self-adaption)		
	Input method		Single phase three wire		
	Battery voltage (V)		36	48	72
	Power capacity (VA/W)		1000/900	2000/1800	3000/2700
	Voltage(V)		208/220/230/240 ±1 % (settable)		
	Frequency(Hz)		50/60 ±0.2 % (battery mode)		
	Wave		Sine-wave		
	Voltage distortion		THD <2 % (linear load)		
	Power factor		0.9 (1.0 optional at ambient temperatures below 30 °C)		
	Transfer time between battery mode and mains mode (ms)		0		
	Overload ability	Low overload for 10min	1050VA/ 945W<Load≤1100VA/ 990W	2100VA/ 1890W<Load≤2200VA/ 1980W	3150VA/ 2835W<Load≤3300VA/ 2970W
		Medium overload for 1min	1100VA/ 990W<Load≤1300VA/	2200VA/ 1980W<Load≤2600VA/	3300VA/ 2970W<Load≤3900VA/
			1170W	2340W	3510W
		High overload for 1s	1300VA/ 1170W<Load≤1500VA/ 1350W	2600VA/ 2340W<Load≤3000VA/ 2700W	3900VA/ 3510W<Load≤4500VA/ 4050W
		Highest overload for 200ms	1500VA/1350W<Load	3000VA/2700W<Load	4500VA/4050W<Load
	Output receptacles		8*IEC320 C13	8*IEC320 C13+1*IEC320 C19	
	Backup time		3 min		
	Charge recovery time		<10 h		
	Communication interface		Standard: RS232 and USB ports, supporting the UPS power management software Optional: RS485+dry contact, protocol transfer card, SNMP card		
	Display		LCD showing the UPS operating status.		
	Alarm function		Battery low voltage, mains failure, UPS fault, output overload		
	Protection function		Battery under-voltage protection, overload protection, short-circuit protection, over-temperature protection, input over-voltage protection		
	Noise (dB)		<50		
	Working temperature (°C)		−5 to 50 (no derating from −5 to 40; output power derated from 40 to 50)		
	Relative humidity		0–95 %, non-condensing		
	IP grade		IP20		
	Altitude		2000 m (derate the rated power above 2000 m)		
	AC distribution system		TN distribution system		

- Specifications are subject to change without prior notice.

Index ⌄	Model ›	1000VA UPS	2000VA UPS	3000VA UPS
	Dimensions (mm) (W*D*H)	438*423*86	438*572*86	
	Weight (kg)	14	20	26
Battery box (optional)	Battery type	2 strings of 3 × 12 V 7 Ah	2 strings of 4 × 12 V 9 Ah	2 strings of 6 × 12 V 9 Ah
	Dimensions (mm) (W*D*H)	438*420*87 (2U)	438*570*87 (2U)	
	Weight (kg)	20	29	40

Dimensions and weights

Overall dimensions in millimetres (W × D × H) and net weights, from the technical data of this manual. Leave the clearances given in the installation chapter around the UPS.

IST3-J 1000 VA

UPS and optional battery box (2U)



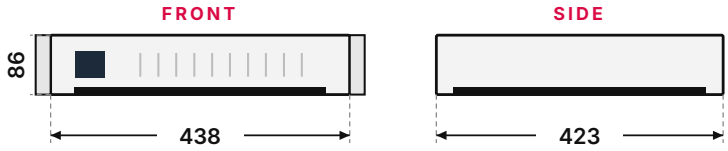

W × D × H	438 × 423 × 86 mm
UPS	14 kg
Battery box	20 kg

IST3-J 2000 VA / 3000 VA

UPS and optional battery box (2U)



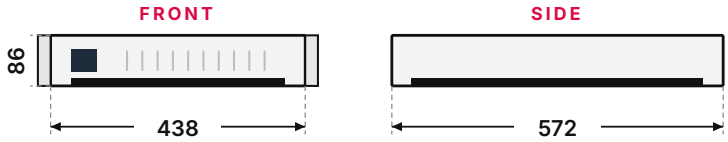

W × D × H	438 × 572 × 86 mm
2000 VA UPS	20 kg
3000 VA UPS	26 kg
2000 VA battery box	29 kg
3000 VA battery box	40 kg

APPENDIX B

B Acronyms and Abbreviations

Acronym	Meaning
AC	Alternating Current
DC	Direct Current
ECO	Economy mode
EPO	Emergency Power Off
IEC	International Electrotechnical
IGBT	Insulated-Gate Bipolar Transistor
LCD	Liquid Crystal Display
NC	Normally Closed (contact)
PE	Protective Earth
PFC	Power Factor Correction
PWM	Pulse-Width Modulation
RCD	Residual-Current Device
RMS	Root Mean Square
RS232	Recommended Standard 232
RS485	Recommended Standard 485
SNMP	Simple Network Management Protocol
THD	Total Harmonic Distortion
UPS	Uninterruptible Power Supply
USB	Universal Serial Bus

More on the AEC partner portal

PARTNER PORTAL

portal.emea.aecups.com

- 3D models of every UPS
- Diagrams and drawings
- Video tutorials
- Manuals and catalogues, always up to date

WHATSAPP SUPPORT

+39 393 080 5211

Technical support 24/7. Scan the code to write to AEC service.

AEC International Srl
Via Nerviano 55 · 20045 Lainate (MI) · Italy

Sales +39 02 9415 8991 · info@aecups.com
Service +39 393 080 5211 · service@aecups.com