AEC
Technology Behind Power

USER MANUAL

IST3-J

6–10 kVA

Online UPS, single-phase, rack-mounting series (the manual also covers the 1–3 kVA rack models)



English

Read this manual before installing and using the UPS.
Keep it for future reference.

AEC-UM-IST3J-6-10-EN
Rev. 01 · 10/2026

OVERVIEW

Contents

About this manual 3

1 Safety Description 4

1.1 Safety Announcements 4
1.2 Operation and Maintenance Requirements 6
1.3 Working Environment Requirements 6

2 Overview 7

2.1 Product Intro 7
2.2 Appearance and Structure 8
2.3 Communication 12
2.4 Working Principles 13

3 Installation 15

3.1 Unpacking and Checking 15
3.2 Cable and Breaker Selection 15
3.3 Install UPS 16
3.4 Electrical Connection 17

4 Operation and Maintenance 20

4.1 Check Before Startup 20
4.2 Startup Operation 20
4.3 Shutdown Operation 20
4.4 Periodic Preventative Maintenance 20
4.5 Battery Maintenance 21
4.6 Troubleshooting 21

A Technical Specifications 23

A.1 1kVA, 2kVA, 3kVA 23
A.2 6kVA, 10kVA 24
Dimensions and weights 25

B Acronyms and Abbreviations 26

BEFORE YOU START

About this manual

This manual describes the AEC IST3-J 6–10 kVA UPS: online UPS, single-phase, rack-mounting series (the manual also covers the 1–3 kVA rack models). It covers the features, controls, installation, operation, maintenance, transport and storage. Read it before you start, and keep it with the UPS for future reference.



6 – 10 kVA rack, 2U



Tower

0 ms transfer time	**230 V** output voltage ±2 %, settable 208/220/230/240 V
0.9 output power factor	**2U** 19-inch rack mounting

MODELS COVERED

- IST3-J 6 kVA and 10 kVA, 2U rack
- IST3-J 1 kVA, 2 kVA and 3 kVA rack (earlier generation), standard and long-backup models, with battery box

WHO THIS MANUAL IS FOR

Installers, electricians, IT and facility staff who install, operate and maintain the UPS. Electrical installation and any work inside the UPS must be done by qualified personnel, in line with IEC 60364 and the local wiring rules.

Product standard: IEC 62040

Safety messages

Safety messages in this manual follow ISO 3864 / ANSI Z535. The signal word tells how serious the hazard is.

DANGER	A hazardous situation which, if not avoided, **will** result in death or serious injury.
WARNING	A hazardous situation which, if not avoided, **could** result in death or serious injury.
CAUTION	A hazardous situation which, if not avoided, could result in minor or moderate injury, or in damage to the equipment.
NOTE	Additional information that stresses or completes the text.
TIP	A hint that helps you solve a problem or save time.

Numbers in red circles on a picture are explained in the table or list that follows it. References in red, such as Figure 2-1 or Table 3-1, are links in the PDF. Figures are for reference only: the actual product may differ in detail.

Up and running

The short version: each step points to the full instructions. Read the safety chapter first.

1. **Read the safety instructions.** See Section 1.1, Safety Announcements.
2. **Unpack and check the delivery.** See Section 3.1, Unpacking and Checking.
3. **Choose the place and prepare the cables and breakers.** See Section 3.2, Cable and Breaker Selection.
4. **Install and connect the UPS.** See Section 3.4, Electrical Connection.
5. **Start the UPS.** See Section 4.2, Startup Operation.
6. **Look after the UPS.** See Section 4.4, Periodic Preventative Maintenance.

01

CHAPTER 1

Safety Description

This chapter describes the safety instructions. Before performing any work on the UPS, read this manual carefully, follow the operating and installation instructions and observe all danger, warning and safety information, to avoid personal injury and equipment damage caused by improper operation.

IN THIS CHAPTER

1.1 Safety Announcements
1.2 Operation and Maintenance Requirements
1.3 Working Environment Requirements

AT A GLANCE **The safety rules of this chapter**



High voltage inside, also after the UPS is switched off: wait before opening it.



Installation, opening and service by qualified personnel only.



Batteries: never short-circuit them, keep them from fire, use only the specified type.



Earth the UPS before connecting anything else.



No liquids or foreign objects inside the UPS.



In case of fire use a dry-powder extinguisher, never water or liquid.



Keep the air inlets and outlets free; respect the clearances.

1.1 Safety Announcements

This section describes the safety instructions for operation and maintenance. For details, see the safety information in the relevant chapters.

CAUTION

Before using the UPS, read the safety and operating instructions in this section carefully to avoid accidents.

The Danger, Warning and Caution notices in this manual do not cover every safety precaution; they supplement the general safety instructions.

NOTE

Damage caused by not following the general safety requirements or the applicable safety standards for design, production and use is not covered by the warranty.

1.1.1 Use Announcements

DANGER

High temperatures and high voltages are present inside the UPS. When using the UPS, strictly comply with all warnings and operating instructions on the UPS and in this manual.

CAUTION

Do not let liquids or foreign objects enter the UPS.

CAUTION

This UPS is a class A product. In a residential environment it may cause radio interference, and the user may need to take additional measures.

WARNING

Do not connect unbalanced loads, half-wave rectified loads or inductive loads to the UPS output, such as air conditioners, fans/blowers, motor starters, electric drills, motors or fluorescent lamps.

WARNING

In case of fire, use a dry-powder extinguisher. A liquid extinguisher may cause electric shock.

CAUTION

The UPS must be connected to a protective earth (PE).

1.1.2 Battery Announcements

WARNING

Batteries must be replaced only by authorised, qualified personnel. During the work, remove watches, bracelets, bangles, rings and other conductive objects, wear insulating shoes and gloves, and use insulated tools.

- Do not place tools or other conductive objects on the batteries.
- Never short-circuit the positive and negative battery terminals and never reverse the polarity: this can cause fire or electric shock.
- Before connecting or disconnecting the battery terminals, disconnect the charging power first.
- Do not mix batteries of different types, models or manufacturers.
- Keep batteries away from fire and from any electrical equipment that may produce sparks, to avoid personal injury.
- Do not open or damage the batteries. The electrolyte contains strong acid, which is harmful to skin and eyes. In case of contact, rinse immediately with plenty of water and seek medical attention.
- Dispose of used batteries in accordance with local regulations.

1.2 Operation and Maintenance Requirements

⚠ CAUTION

Only authorised, qualified personnel may open the UPS enclosure. Opening it can cause electric shock, and any fault that results is not covered by the warranty.

- If the UPS needs to be moved, rewired or serviced, disconnect all electrical connections (AC power, battery power, etc.) to isolate all power inputs. After disconnecting all power sources, wait at least 10 minutes before working on the UPS. Until then, the output and internal parts may still carry a dangerous voltage.
- When removing a fan, do not put fingers or tools into the rotating fan, to avoid equipment damage or personal injury.

1.3 Working Environment Requirements

- Do not install the UPS where it would be exposed to direct sunlight, rain or moisture.
- Do not install the UPS where there is conductive (metal) dust, or near heat sources.
- Generally, the operating temperature of the UPS is -5 °C to +40 °C and the relative humidity is 0 % to 95 % RH, non-condensing (recommended: 20 °C to 25 °C and about 50 % RH).
- Install the UPS on a level, vibration-free surface, with an inclination of less than 5°. Keep the UPS well ventilated: the clearance between the rear or sides of the UPS and adjacent equipment or walls should be at least 300 mm to 500 mm. Poor ventilation raises the internal temperature, which shortens the life of the internal components and of the UPS.
- The recommended altitude is below 1000 m. Above 1000 m, derate the output power in accordance with IEC 62040-3.

CHAPTER 2

02 Overview

This chapter describes the models, features, structure and working principles of the UPS.

IN THIS CHAPTER

2.1 Product Intro
2.2 Appearance and Structure
2.3 Communication
2.4 Working Principles

THE UPS AT A GLANCE



Rack mounting: display and keys



Rear: terminals, breakers and communication ports



Tower position, on its stands

2.1 Product Intro

The rack-mounting UPS series (1 kVA–10 kVA) is a high-frequency, true online, double-conversion UPS with intelligent functions. It provides reliable power protection for file servers, enterprise servers, central servers, microcomputers, hubs, telecom systems, data centres and other equipment that requires high-quality power. It is widely used in key business sectors such as postal services, finance, networks, stock exchanges and railways.

This UPS series includes 5 power ratings: 1 kVA, 2 kVA, 3 kVA, 6 kVA and 10 kVA. The 1 kVA, 2 kVA and 3 kVA models are available as standard-backup and long-backup models. The 6 kVA and 10 kVA models are long-backup models only (external batteries), and the 10 kVA model is available in a single and a parallel version.

The product features are as follows.

INTELLIGENT RS232 COMMUNICATION

With the standard RS232 data port and the UPS power management software, the UPS can be monitored and controlled remotely from a computer: its operating status and electrical data can be read, and it can be switched on and off remotely. An SNMP network adapter is also supported, to connect the UPS to the network.

HIGH INPUT POWER FACTOR

Advanced active PFC technology reduces the burden on the power grid, making this a new-generation green power product.

HIGH COST PERFORMANCE

Several power conversion stages and high-frequency PWM technology give the UPS high efficiency, small size and light weight, improve operating reliability and reduce cost.

PERFECT PROTECTION

Protection against output over-voltage, battery under-voltage, input over-voltage, triple over-current, etc., overcoming poor adaptability to the power grid and weak surge resistance.

LOW MAINS INPUT VOLTAGE

Independent rapid-detection technology is used. Down to the lower limit of the input voltage range (120 V for the 1–3 kVA models, 80 V for the 6 kVA and 10 kVA models, see Appendix A), the battery does not discharge. In mains mode all output power is taken from the grid, so the battery stays fully charged, the number of discharge cycles is reduced and battery life is extended.

2.2 Appearance and Structure

2.2.1 Appearance

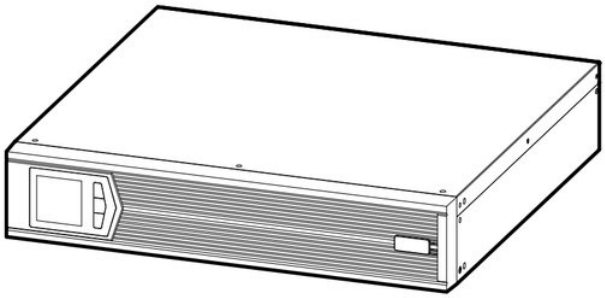

FIGURE 2-1 UPS appearance

For the 2 kVA and 3 kVA standard-backup models, a battery box is supplied with the UPS; for the 1 kVA, 2 kVA and 3 kVA long-backup models, battery boxes can be supplied as required. The battery box is shown in Figure 2-2.

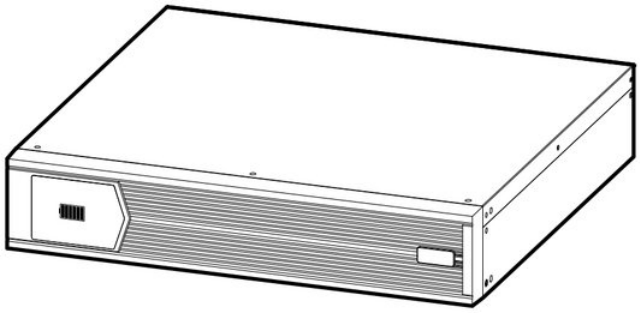

FIGURE 2-2 Battery box appearance of 1kVA, 2kVA, 3kVA UPS

For the 6 kVA and 10 kVA models, battery boxes can be supplied as required. The battery box is shown in Figure 2-3.

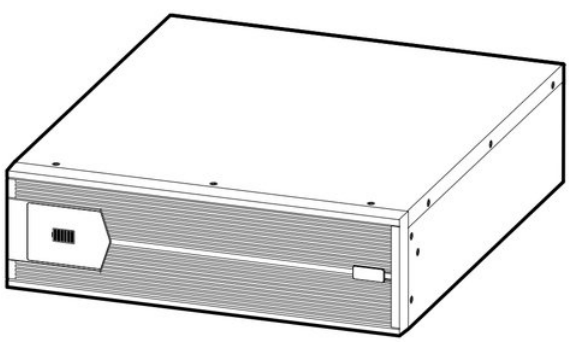

FIGURE 2-3 Battery box appearance of 6kVA, 10kVA UPS

> **NOTE**
> For long-backup models, the number of battery boxes depends on the required backup time. The battery box for each UPS model is given in Table 2-1.

TABLE 2-1 Relationship between UPS and battery box

UPS model	Battery box model
1kVA(long backup)	KRB0748
2kVA (standard backup)	KRB0748
2kVA(long backup)	KRB0772
3kVA (standard backup)	KRB0772
3kVA(long backup)	KRB0796
6kVA	KRB07192
10kVA	

2.2.2 Operation Panel

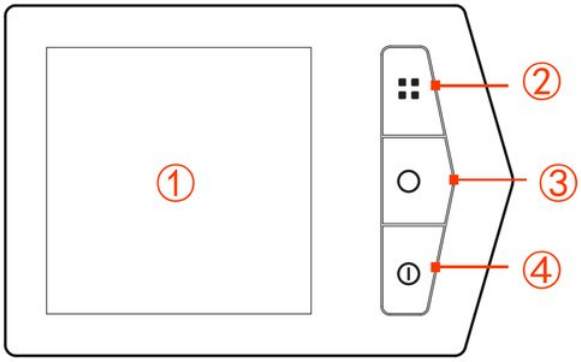

FIGURE 2-4 Operation panel

TABLE 2-2 Operation panel description

No.	Name	Illustration
	LCD	Shows the working status, battery capacity and fault alarms.
	" " button	• Briefly press the Function button: the LCD shows the output voltage, output frequency, input voltage, input frequency, battery voltage, UPS temperature, output load percentage, fault information, etc. in turn. • Press and hold the " " button for 5 s to enter the settings page. Briefly press " " to select a setting, and press and hold " " button to confirm the command.
	" " button	When the UPS is on, press and hold the button for 1 s to turn the UPS off.
	button	• When the UPS is off, press and hold the " " button for 1 s to start the UPS. • When the UPS is on in mains mode, press and hold the " " button for 3 s to start a battery test. • In battery mode, press and hold the " " button for 3 s to mute the buzzer (silences the mains-failure alarm).

LCD PANEL

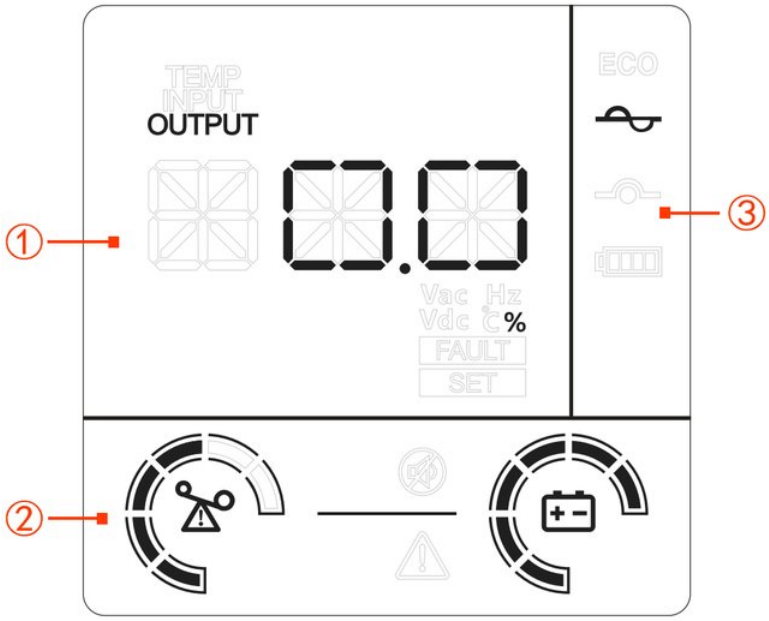

FIGURE 2-5 LCD panel

The LCD panel is described in Table 2-3.

TABLE 2-3 LCD panel description

NO.	Name	Illustration
	Running status display area	Shows the input, output, temperature, fault type and setting, etc. of the UPS.
	Output status display area	Shows the load capacity, battery capacity, fault indication and buzzer silence, etc.
	Work mode display area	Shows the UPS work status: mains inverter ( ), bypass power supply ( ), battery inverter ( ), ECO (ECO)

> **NOTE**
> For fault codes and the corresponding actions, see Table 4-2.

Display and keys: quick guide

The keys are marked with symbols: the power symbol (ON), O (OFF) and the four squares (function). A key that must be held shows the time on its badge.

QUICK GUIDE **Switch the UPS on and off** Section 4.2 / 4.3

1



UPS off: it starts

→

2



UPS on: it switches off

QUICK GUIDE **Read the measurements**

1

Function

Each press: the next value on the LCD (output V and Hz, input V and Hz, battery V, temperature, load %, faults)

QUICK GUIDE **Battery test and buzzer**

1

ON

3 s

Mains mode: starts a battery test

→

2

ON

3 s

Battery mode: mutes the mains-failure alarm

QUICK GUIDE **Change a setting**

1

Function

5 s

Opens the settings page

→

2

Function

Short press: choose a setting

→

3

ON

press and hold

Confirms the command

2.2.3 Rear Panel

1KVA

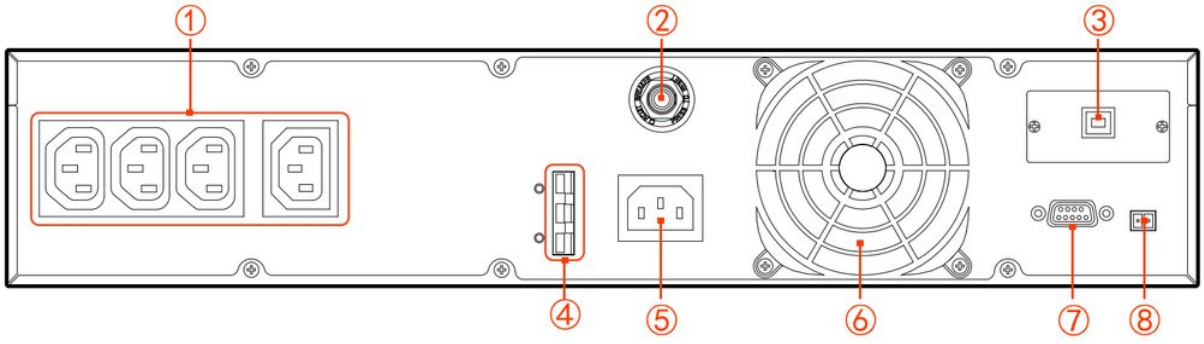

① Output socket ② Over-current protector ③ USB
④ Battery expansion port (Just for long backup model) ⑤ Mains input socket
⑥ Fan ⑦ RS232 port ⑧ EPO

FIGURE 2-6 Rear panel of 1kVA UPS

2KVA, 3KVA

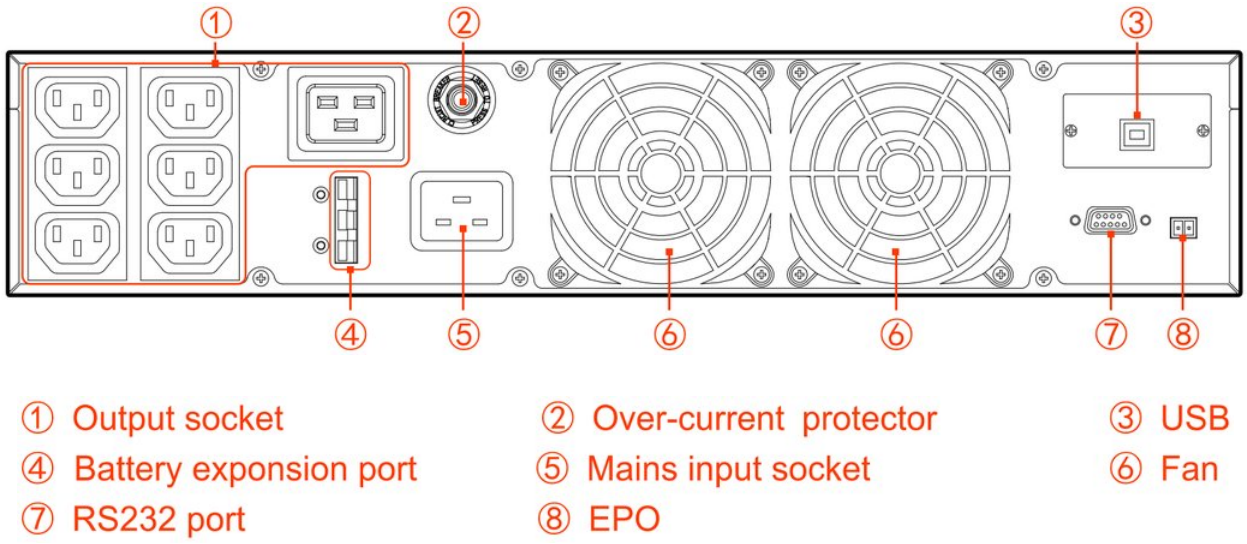

FIGURE 2-7 Rear panel of 2kVA, 3kVA UPS

6KVA, 10KVA

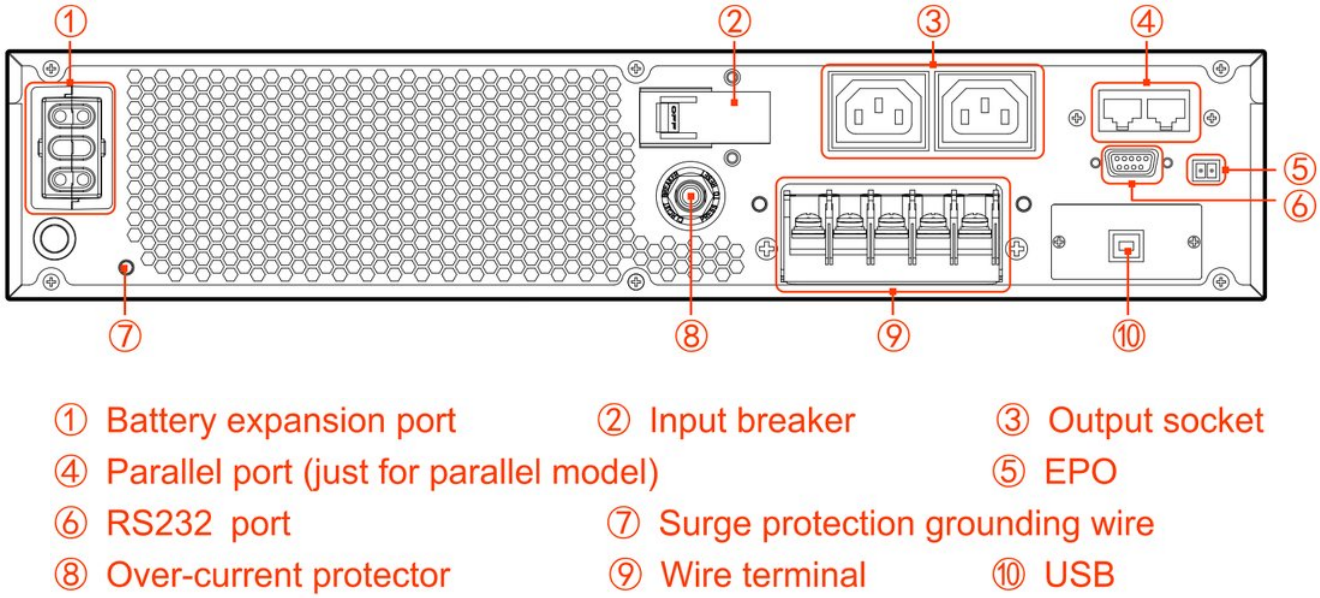

FIGURE 2-8 Rear panel of 6kVA, 10kVA UPS

2.3 Communication

The rack-mounting UPS series (1 kVA–10 kVA) uses an RS232 serial port to communicate with a PC. The pin assignment between the UPS and PC RS232 ports is given in Table 2-4.

TABLE 2-4 Pin assignment of the RS232 ports between UPS and PC

RS232 port of UPS	RS232 port of PC
9 (3)	2 (receiving end)
6 (2)	3 (transmitting end)

RS232 port of UPS	RS232 port of PC
7 (5)	5 (grounding end)

2.4 Working Principles

HOW IT WORKS **Operating modes at a glance**

Normal (online) mode

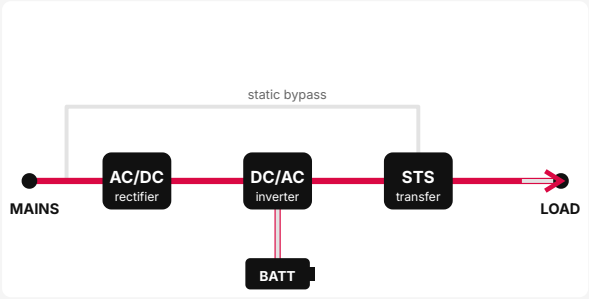

Mains present: the rectifier and the inverter supply the load with regulated power; the battery is kept charged.

Battery mode

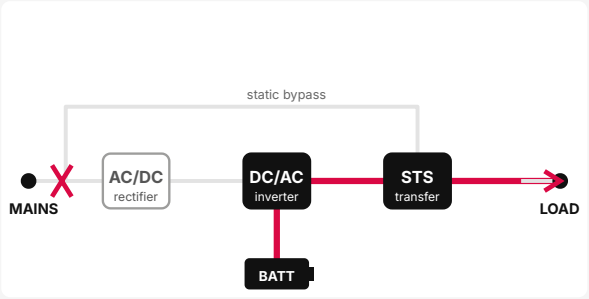

Mains outside its limits or missing: the battery feeds the inverter, with no break for the load.

Bypass mode

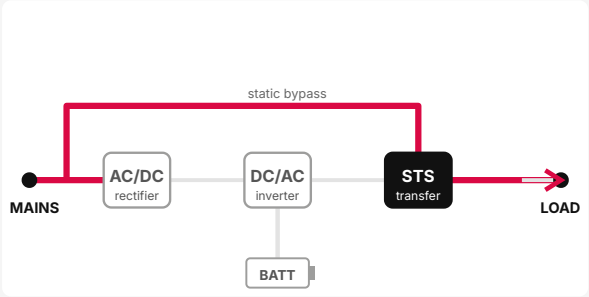

Overload, fault or inverter off: the load is supplied from the mains through the static bypass.

ECO mode

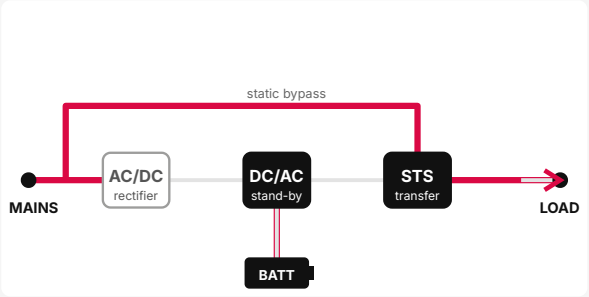

Mains inside the ECO window: the load runs on the bypass for the highest efficiency; the inverter takes over if the mains goes out of range.

power flow working idle

When the mains is normal, the PFC converts the UPS input into a stable ±360 V DC voltage, which supplies the DC/AC inverter to output a stable 230 V AC and charges the battery at the same time. When the mains is abnormal, the DC/DC converter boosts the battery voltage to ±360 V DC for the DC/AC inverter.

The working principles of the rack-mounting UPS series (1 kVA–10 kVA) are shown in Figure 2-9 and Figure 2-10. The DC/AC inverter uses a half-bridge structure and the DC/DC boost stage uses a quasi push-pull circuit or a boost circuit. PFC is the active power-factor correction circuit; CHARGER is a fully isolated charger.

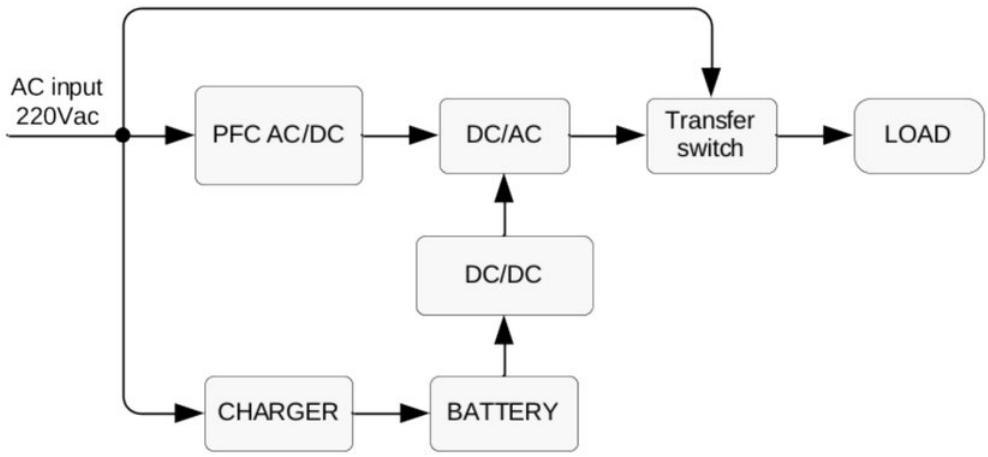

FIGURE 2-9 Working principle of 1kVA, 2kVA, 3kVA UPS

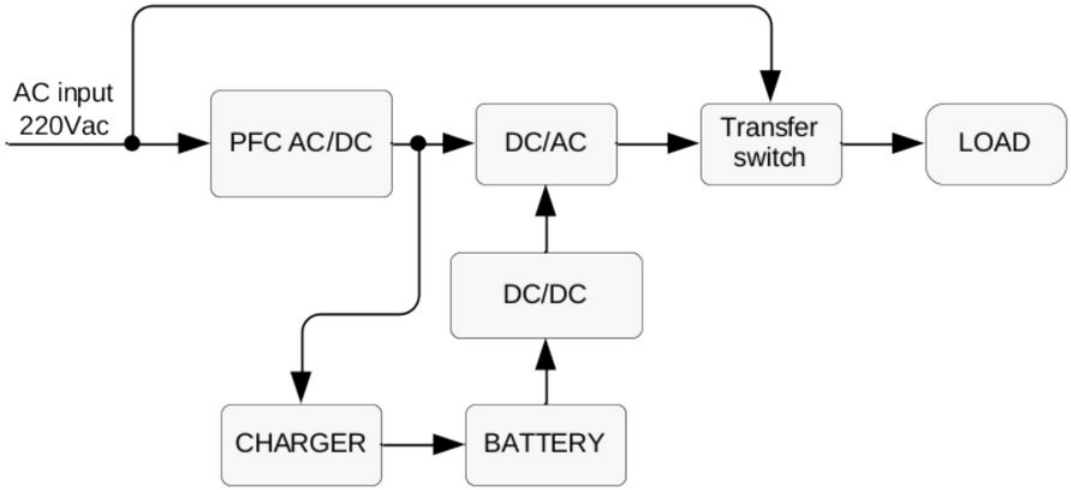

FIGURE 2-10 Working principle of 6kVA, 10kVA UPS

03

CHAPTER 3

Installation

This chapter describes the UPS installation, including unpacking and checking, installation preparation and electrical connection.

IN THIS CHAPTER

3.1 Unpacking and Checking
3.2 Cable and Breaker Selection
3.3 Install UPS
3.4 Electrical Connection

ROADMAP **From delivery to operation**

1. **Read the safety instructions** — Section 1.1
2. **Unpack and check the delivery** — Section 3.1
3. **Choose the place and prepare the cables and breakers** — Section 3.2
4. **Install and connect** — Section 3.4
5. **Start** — Section 4.2
6. **Look after** — Section 4.4

3.1 Unpacking and Checking

Unpack the UPS and check the following items:

- Inspect the UPS for shipping damage. If any damage is found, report it to the carrier immediately.
- Check the delivery list to make sure that all accessories are complete and correct. If there is any discrepancy, contact AEC International or your distributor immediately.

3.2 Cable and Breaker Selection

3.2.1 Cable Selection

For the AC input, AC output and battery cables of the UPS, select at least the cross-sectional area recommended in Table 3-1; if in doubt, choose the next larger size.

TABLE 3-1 Recommended cable cross-sectional areas

Cross-sectional area (mm²)		1	1.5	2.5	4	6	10	16	25
Current-carrying capacity (A)	Rubber-insulated cable (25 °C)	8	12	20	28	42	70	96	125
	PVC-insulated cable (25 °C)	6	9	15	20	30	50	64	100

3.2.2 Input Breaker Selection

Install an input circuit breaker rated for the UPS (a 2-pole breaker that disconnects both line and neutral, with backfeed protection, is recommended), or a distribution board, upstream of the UPS input to isolate it from the mains. Considering the charging power of the UPS and the inrush current at power-on, the rated current of the breaker should be 1.5 to 2 times the maximum input current of the UPS. Do not use a breaker with residual-current (earth-leakage) protection, as it may trip unintentionally. The distribution board should be built by a qualified company. For the input breaker selection, see Table 3-2.

TABLE 3-2 Recommended input breaker specification

	1kVA		2kVA		3kVA		6kVA		10kVA	
	Max. cur.	B	Max. cur.	Breaker	Max. cur.	Breaker	Max. cur.	Breaker	Max. cur.	Breaker
AC input (A)	6	10	12	20	18	32	36	50	60	100
DC input (for long backup model) (A)	37	50	37	50	42	50	39	50	65	100

3.3 Install UPS

NOTE

The UPS and the battery box are installed in the same way; this section uses the UPS as an example.

PROCEDURE

1. Fix the two rack-mounting brackets to the sides of the UPS with 4 countersunk screws, as shown in Figure 3-1.

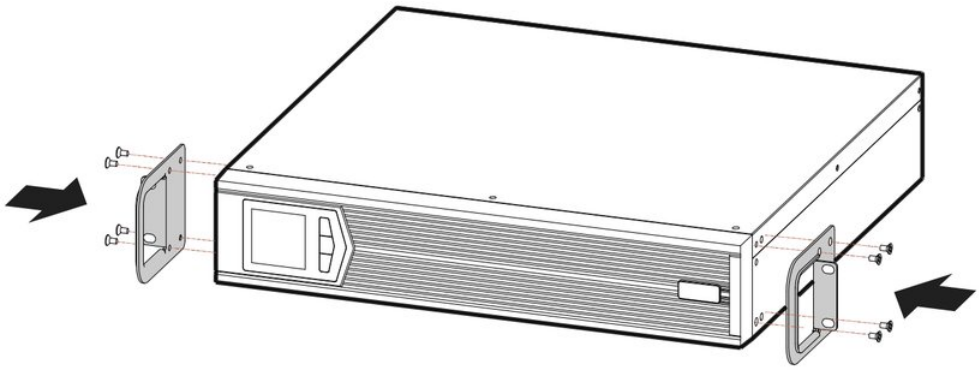

FIGURE 3-1 Installing the rack-mounting brackets

2. Push the UPS into the cabinet and fix it with screws, as shown in Figure 3-2.

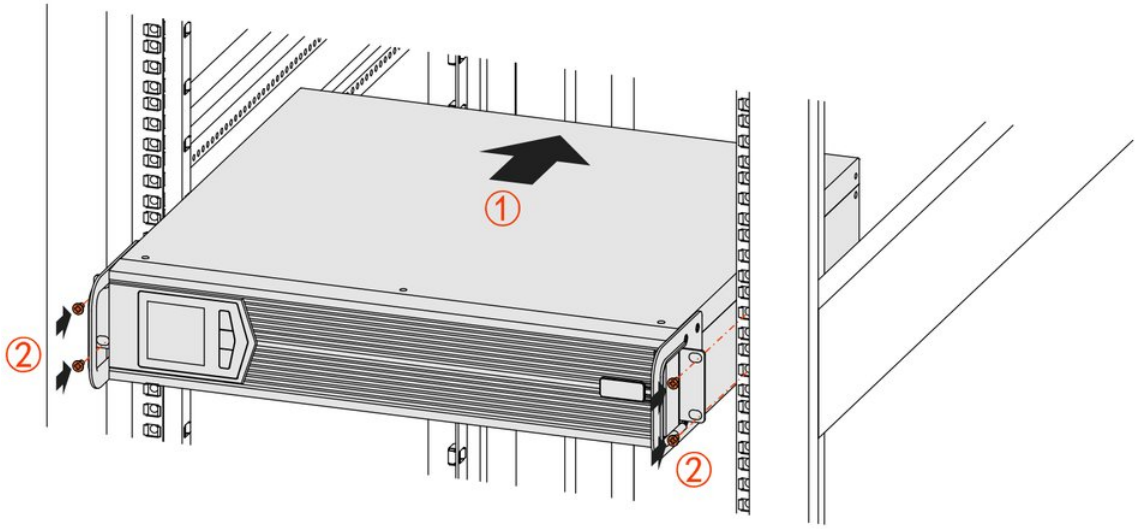

FIGURE 3-2 Fasten the UPS

CAUTION

The battery box is heavy: always install it in the rack below the UPS.

3.4 Electrical Connection

The UPS and the battery box are 19-inch rack units; the battery box connects to the UPS through the battery port.

WARNING

Make the electrical connections only after the UPS is fully installed and all breakers connected to it are open (OFF).

- On standard-backup models the backup time cannot be extended; on long-backup models it can be extended as required.
- The DC input voltage of the UPS must match the voltage of the battery box.
- Long-backup models must also be connected to the battery with the battery expansion cable: insert the battery plug of the battery box into the battery socket of the UPS.

The input and output connections of the UPS are shown in Figure 3-3 to Figure 3-6.

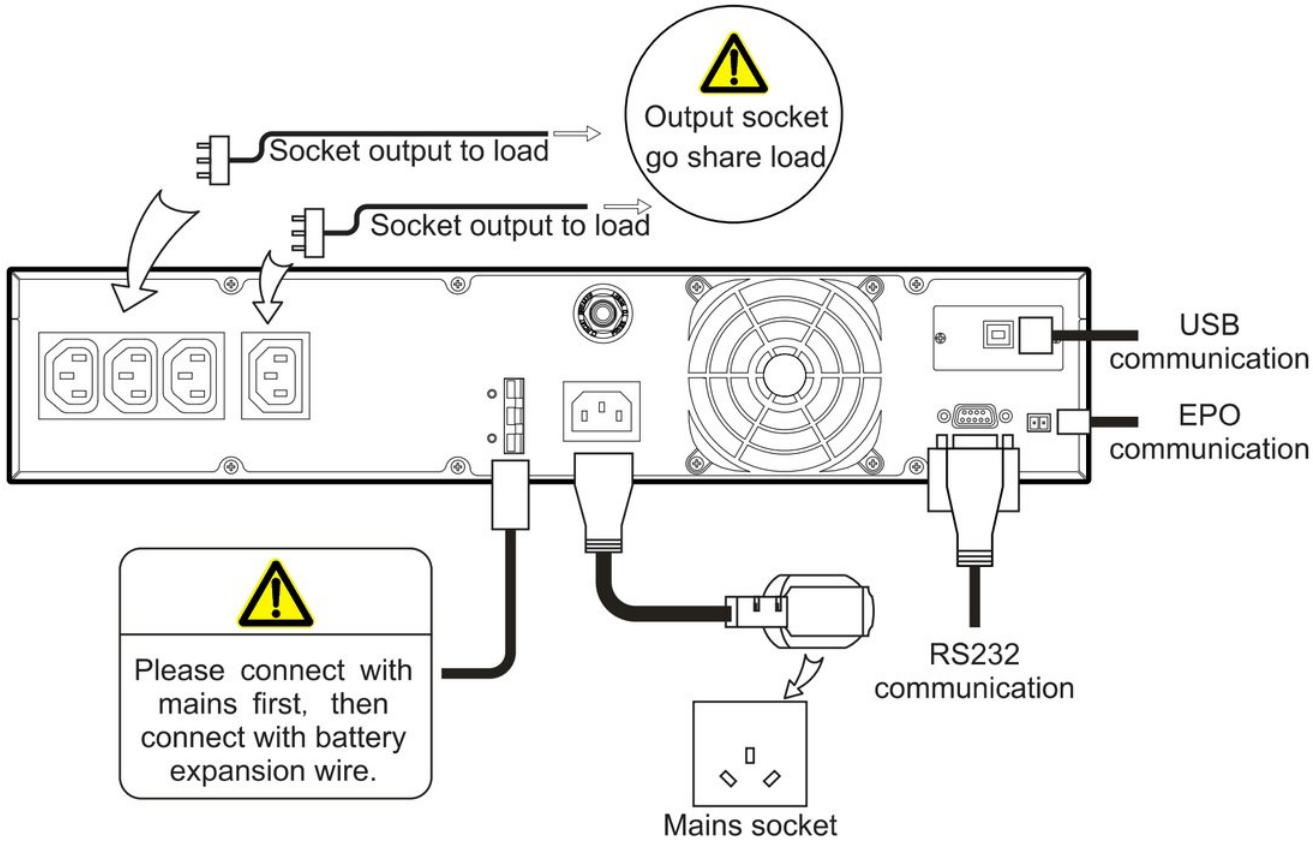

FIGURE 3-3 Wiring diagram of 1kVA

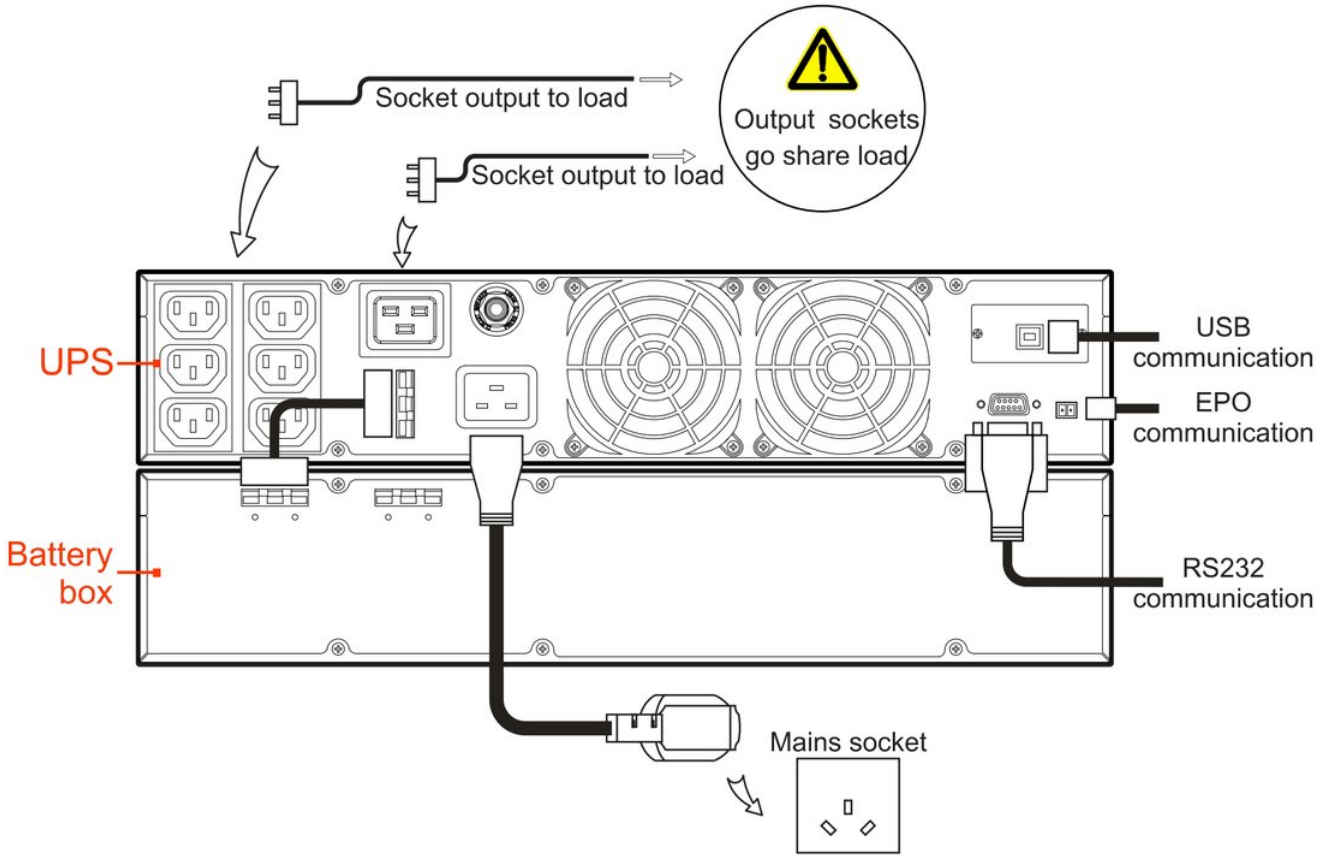

FIGURE 3-4 Wiring diagram of 2kVA /3kVA standard backup UPS

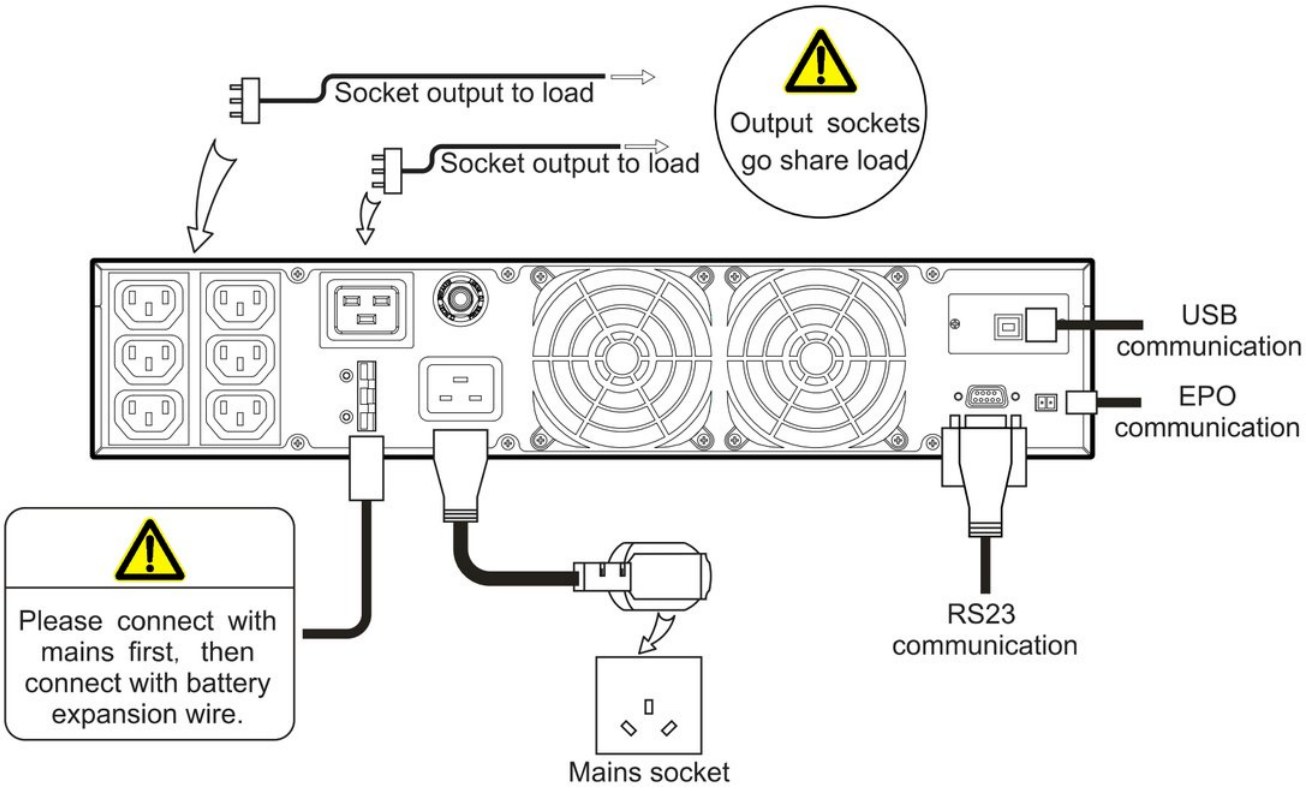

FIGURE 3-5 Wiring diagram of 2kVA /3kVA long backup UPS

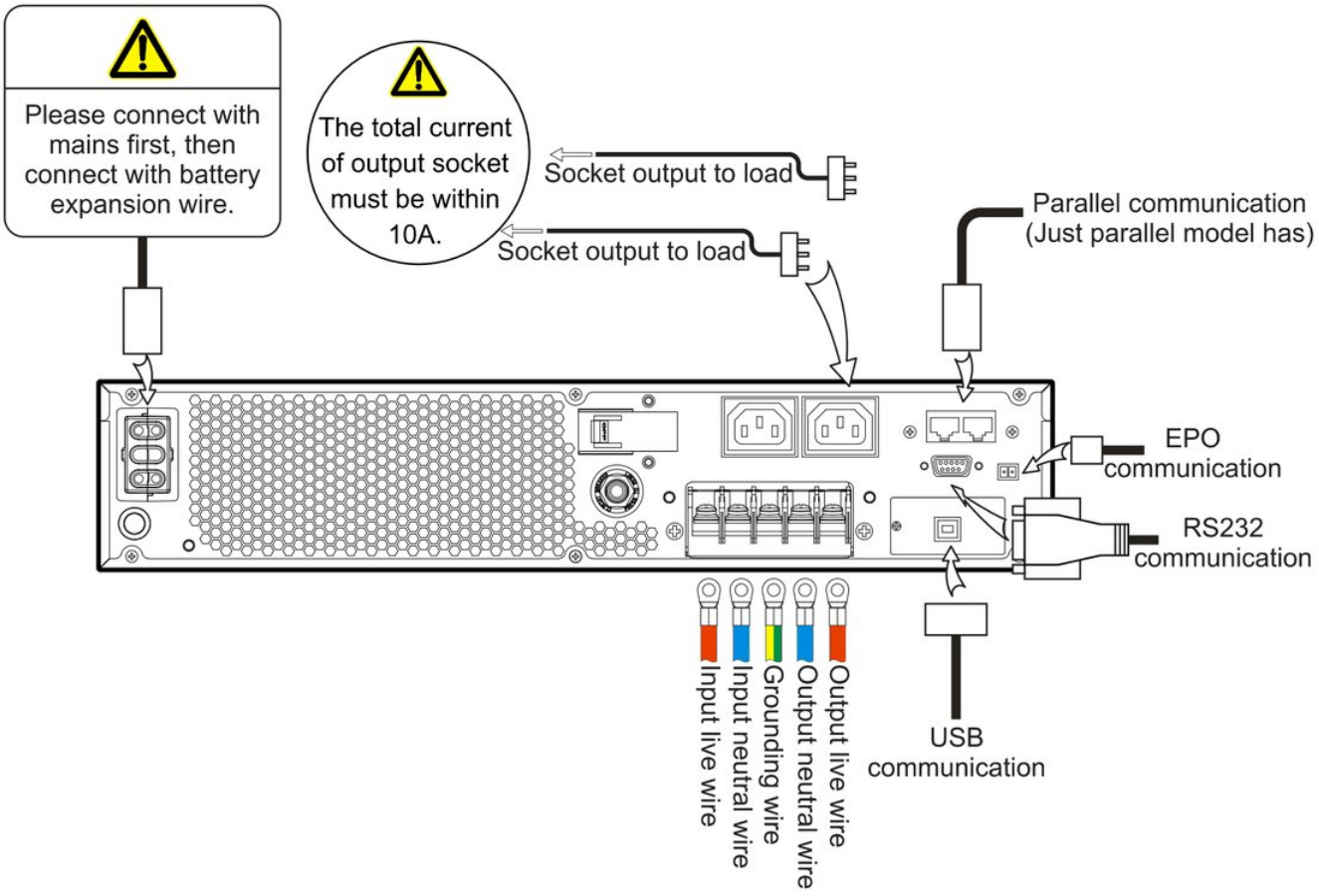

FIGURE 3-6 Wiring diagram of 6kVA, 10kVA

⚠ CAUTION

- The input disconnecting device (socket or breaker) must be installed near the UPS and be easily accessible.
- On long-backup models, connect the mains input first, then plug in the battery expansion cable.
- Generally, the load current of each output socket should not exceed 10 A.

CHAPTER 4

04 Operation and Maintenance

This chapter describes the operating procedures, daily maintenance and troubleshooting.

IN THIS CHAPTER

4.1 Check Before Startup
4.2 Startup Operation
4.3 Shutdown Operation
4.4 Periodic Preventative Maintenance
4.5 Battery Maintenance
4.6 Troubleshooting

4.1 Check Before Startup

- Check that the cable connections are tight and that the colours of the AC wires comply with the applicable standard.
- Check that the UPS is reliably earthed.
- Check that the voltage between neutral and earth is less than 5 V AC.
- If the UPS is equipped with a remote monitoring device, check that the RS232 port wiring is correct.
- On long-backup models, check that the wiring between the UPS and the battery box is correct and secure.
- Check that the wiring is neat and the cables are tidy and properly secured.
- Check that the installation and wiring allow for future modification, expansion and maintenance.
- Check that there is no short circuit at the UPS output and that the load does not exceed the rated capacity of the UPS.

4.2 Startup Operation

PROCEDURE

1. Plug the UPS into the mains socket or switch on the UPS mains input breaker.
2. Press the ⏻ button on the panel for 1 s to start the UPS.
3. About 10 s later, when the UPS is running steadily, switch on the loads (PCs, etc.).

⚠ CAUTION

Switch on the loads starting with the largest and ending with the smallest, to avoid triggering the overload protection.

4.3 Shutdown Operation

PROCEDURE

1. Switch off the loads and let the UPS run without load for about 10 minutes to cool down.
2. Press the ⏻ button on the panel for 1 s.
3. Unplug the UPS from the mains socket or switch off the mains input breaker.

4.4 Periodic Preventative Maintenance

To maintain the efficiency and reliability of the UPS, carry out the following maintenance regularly.

- Clean the UPS regularly with a dry cloth. Do not use liquid or spray cleaners. Shut down the UPS before cleaning.

- Check that the input and output wiring is tight and well connected.
- Check the cooling fans regularly. Keep the air outlets free of obstructions. Replace damaged fans promptly.
- Check the battery voltage and the working status of UPS regularly.

4.5 Battery Maintenance

Battery life depends on the ambient temperature and the number of discharge cycles. Prolonged use at high temperature or deep discharge shortens battery life.

- Charge the battery for 10 hours before first use. The UPS can be used while the batteries charge, but if a power failure occurs during this time, the backup time may be shorter than rated.
- Generally, discharge and recharge the battery once every 4 to 6 months: run the UPS on battery until the low-battery shutdown, then recharge fully. In hot climates, do this once every 2 months. Each charge of the standard battery should last more than 10 hours.
- If the UPS is not used for a long time, charge the battery for more than 10 hours every three months.
- Generally, battery life is 3 to 5 years. Replace batteries that show reduced backup time or fail the battery test. Batteries must be replaced only by authorised, qualified personnel.

4.6 Troubleshooting

Table 4-1 lists only some common faults. If in doubt, contact AEC International service or your distributor.

TABLE 4-1 Troubleshooting

Fault phenomenon	Possible reason
Mains is normal. After start-up the UPS output is normal, but the UPS works in battery mode and the buzzer beeps intermittently.	1. Check that the contactors and sockets in the input circuit are in good condition; 2. Check whether the mains input voltage or frequency shown on the LCD is outside the permitted range of the UPS; 3. Check whether the over-current protector on the rear panel has tripped. If so, press the over-current protector button to reset it.
After installation, switching on the mains blows the fuse or trips the breaker.	Short circuit at the UPS output.
After start-up, the LCD and the output are normal, but as soon as a load is connected, the output stops immediately.	1. The UPS is seriously overloaded or the output circuit is short-circuited. Reduce the load to a suitable level or find the cause of the short circuit. Usual causes: a short circuit in the output socket/power strip, or an internal short circuit caused by UPS damage. 2. The loads were not switched on from the largest to the smallest. Restart the UPS and, when it is running steadily, switch on the largest load first and then the smaller ones one by one.
The buzzer gives a long beep, the fault indicator is lit, and the UPS works in bypass mode (inverter failure).	1. The output is overloaded: the load exceeds the rated power of the UPS. Reduce the load or choose a UPS with a higher power rating. A short transfer to bypass caused by the inrush current of a starting load, followed by an automatic return to normal, is normal operation. 2. UPS over-temperature protection. Check whether the air inlets and outlets of the UPS are blocked or the operating temperature is outside the permitted range.
The UPS works normally, but at a power failure it does not transfer to battery mode, or it transfers to battery mode and soon shuts down on battery under-voltage.	1. Battery ageing: the battery capacity has decreased. Replace the battery. 2. Battery charger fault: the battery is not charged during normal operation. 3. The battery cable is not connected properly or the terminals make poor contact.
With a PC as the load, everything works normally on mains. At a power failure, the UPS runs normally on battery, but the computer stops.	Poor earthing: the neutral-to-earth voltage is too high.

NOTE

The information above helps the user diagnose some common UPS faults. If an internal fault is suspected, contact AEC International service.

TABLE 4-2 Fault symbols and buzzer status

Fault symbol		Buzzer status	Meaning
Fault info. page (page up or page down by **Function** button)	EPO	Long beep	Emergency power off (EPO) activated (if the EPO function is fitted): the bypass and inverter outputs are switched off.
	BUS	Long beep	Internal DC bus voltage fault: the inverter output is switched off.
	TMP	Long beep	UPS over-temperature protection: the inverter output is switched off. Check whether the cooling fan is damaged or the air vents are blocked.
	FAN	Rapid beep (once about every 0.5 s)	Fan fault alarm: the inverter output will shut down for protection. Check whether the cooling fan is
			damaged or blocked.
		Long beep	Fan fault protection: the inverter output is switched off.
	OUT	Long beep	Output fault: check whether the output is short-circuited or the load is too high.
	BAT	Long beep	Battery fault: battery voltage too low or too high (protection).
Load energy bars “25%~100%, overload” all flicker		Rapid beep (once about every 0.5 s)	Output overload alarm: the output will switch off shortly. Reduce the load.
Load energy bars “overload” lit		Long beep	Output overload protection: the output has been switched off.
Load energy bars “short circuit” lit		Long beep	Output short circuit: the output has been switched off.
Battery energy bar “25%~100%, over-voltage” all flicker		Slow beep (once about every 2.0 s)	Battery voltage too high. Check the battery and the charger for faults.
Battery energy bar “under-voltage” flickers		Rapid beep (once about every 0.5 s)	Battery almost exhausted. Save your data and shut down the connected loads.

APPENDIX A

A Technical Specifications

IN THIS CHAPTER

A.1 1kVA, 2kVA, 3kVA
A.2 6kVA, 10kVA

A.1 1kVA, 2kVA, 3kVA

Index ⌄ / Model ›			1kVA standard backup	1kVA long backup	2kVA standard backup	2kVA long backup	3kVA standard backup	3kVA long backup
Input	Voltage range (V)		From 176 V AC to 295 V AC, the UPS can carry more than 75 % load; from 154 V AC to 176 V AC, the UPS can carry less than 75 % load; from 120 V AC to 154 V AC, the UPS can carry less than 50 % load.					
	Frequency range (Hz)		50/60 ±10 % (50/60 Hz auto-sensing)					
	Input way		Single-phase three-wire					
	Battery voltage (V)		24	36	48	72	72	96
	Capacity (VA/W)		1000/900		2000/1800		3000/2700	
	Voltage (V)		230 ±2 % (default) (can be set to 208/220/230/240)					
	Frequency (Hz)		50/60 ±0.2 % (battery mode)					
	Wave form		Sine-wave					
	Voltage distortion		THD < 3 % (linear load)					
	Power factor		0.9 (at ambient temperatures below 30 °C, the power factor can be set to 1.0 by a serial-port command)					
	Transfer time (ms)		0					
		Low overload for 1 min	1000VA/ 900W<Load≤1300VA/ 1040W		2000VA/ 1800W<Load≤2600VA/ 2080W		3000VA/ 2700W<Load≤3900VA/ 3120W	
		Medium overload for 1 s	1300VA/ 1040W<Load≤1500VA/ 1200W		2600VA/ 2080W<Load≤3000VA/ 2400W		3900VA/ 3120W<Load≤4500VA/ 3600W	
		Heavy overload for 200 ms	Load>1500VA/1200W		Load>3000VA/2400W		Load>4500VA/3600W	
	Backup time		3 min at full load	Long backup time Any backup time can be configured as required	3 min at full load	Long backup time Any backup time can be configured as required	3 min at full load	Long backup time Any backup time can be configured as required
	Charge recovery time		For standard-backup models, the charge recovery time is less than 10 hours. For long-backup models, it depends on the capacity of the external battery pack.					
	Communication interface		RS232 port for the UPS power management software					
	Panel display		LCD showing the operating status of the UPS					
	Alarm function		Alarms for low battery voltage, mains failure, UPS fault and output overload.					
	Protection function		Protection against battery under-voltage, overload, short circuit, over-temperature and input over-voltage					

- Specifications are subject to change without prior notice.

Index ⌄	Model ›	1kVA standard backup	1kVA long backup	2kVA standard backup	2kVA long backup	3kVA standard backup	3kVA long backup
	Noise (dB)	<50				<55	
	Operating temperature (°C)	-5 ~ 40					
	Relative humidity	0 ~ 95 %, non-condensing					
	Size (W×D×H) (mm)	438×413×86					
	UPS weight (kg)	11	5.8	7.2	8	7.2	8
	Battery box weight (kg)	--	13	13	17.5	17.5	24

A.2 6kVA, 10kVA

Index ⌄	Model ›	6kVA	10kVA
	Voltage range (V)	From 176 V AC to 275 V AC, the UPS can carry 100 % (full) load; from 80 V AC to 176 V AC, the available output power decreases linearly with the input voltage.	
	Frequency range (Hz)	50/60 ±10 % (50/60 Hz auto-sensing)	
	Input way	Sine-wave	
	Battery voltage (V)	192 (default) (can be set to 12–20 × 12 V batteries via communication)	
	Capacity (VA/W)	6000/5400	10000/9000
	Voltage (V)	230 ±2 % (default) (can be set to 208/220/230/240)	
	Frequency (Hz)	50/60 ±0.2 % (battery mode)	
	Wave form	Sine-wave	
	Voltage distortion	THD < 1 % (linear load); THD < 4 % (non-linear load)	

Index ⌄	Model ›		6kVA	10kVA
	Power factor		0.9 (at room temperature a power factor of 1.0 is possible, with the UPS carrying the load normally)	
	Transfer time (ms)		0	
	Overload capacity	Low overload for 10 min	6900VA/6210W<Load≤7800VA/ 7020W	11500VA/10350W<Load≤13000VA/ 11700W
		Medium overload for 30 s	7800VA/7020W<Load≤9000VA/ 8100W	13000VA/11700W<Load≤15000VA/ 13500W
		Heavy overload for 500 ms	Load>9000VA/8100W	Load>15000VA/13500W
Mechanical part	Size (W×D×H) (mm)		438×500×86	
	Weight (kg)		10.6	12.2
Others	Backup time		For long-backup models, any backup time can be configured as required	For long-backup models, any backup time can be configured as required.
	Charge recovery time		Depends on the capacity of the external battery pack.	
	Communication interface		RS485 port	
	Panel display		LCD showing the operating status of the UPS.	
	Alarm function		Alarms for low battery voltage, mains failure, UPS fault and output overload.	
	Protection function		Protection against battery under-voltage, overload, short circuit, over-temperature and input over-voltage	
	Noise (dB)		<55	
	Operating temperature (°C)		-5 ~ 40	
	Relative humidity		0 ~ 95 %, non-condensing	

- Specifications are subject to change without prior notice.

Dimensions and weights

Overall dimensions in millimetres (W × D × H) and net weights, from the technical data of this manual. Leave the clearances given in the installation chapter around the UPS.

IST3-J 6 kVA / 10 kVA

rack, 2U



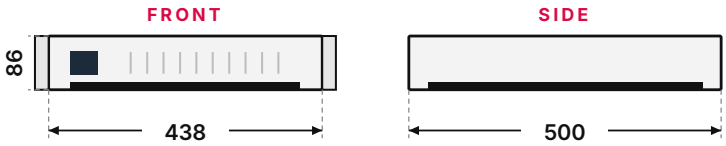

W × D × H	438 × 500 × 86 mm
6 kVA	10.6 kg
10 kVA	12.2 kg

IST3-J 1–3 kVA rack

UPS; battery box of the same size



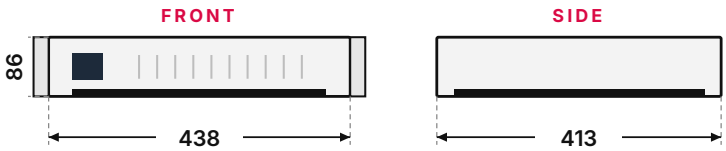

W × D × H	438 × 413 × 86 mm
1 kVA standard / long backup	11 / 5.8 kg
2 kVA standard / long backup	7.2 / 8 kg
3 kVA standard / long backup	7.2 / 8 kg
Battery box 1 / 2 / 3 kVA	13 / 17.5 / 24 kg

APPENDIX B

B Acronyms and Abbreviations

Acronym	Meaning
AC	Alternating Current
DC	Direct Current
ECO	Economy (high-efficiency) mode
EPO	Emergency Power Off
IEC	International Electrotechnical Commission
LCD	Liquid Crystal Display
PFC	Power Factor Correction
PWM	Pulse-Width Modulation
RS232	Recommended Standard 232
RS485	Recommended Standard 485
SNMP	Simple Network Management Protocol
THD	Total Harmonic Distortion
UPS	Uninterruptible Power System

More on the AEC partner portal

PARTNER PORTAL

portal.emea.aecups.com

- 3D models of every UPS
- Diagrams and drawings
- Video tutorials
- Manuals and catalogues, always up to date

WHATSAPP SUPPORT

+39 393 080 5211

Technical support 24/7. Scan the code to write to AEC service.

AEC International Srl
Via Nerviano 55 · 20045 Lainate (MI) · Italy

Sales +39 02 9415 8991 · info@aecups.com
Service +39 393 080 5211 · service@aecups.com