AEC
Technology Behind Power

USER MANUAL

IST6

200–500 kVA

Modular online double-conversion UPS, three-phase



English

Read this manual before installing and using the UPS.
Keep it for future reference.

AEC-UM-IST6-200-500-EN
Rev. 01 · 11/2026

OVERVIEW

Contents

About this manual 4

1 Safety Description 5

1.1 General Description 5
1.2 Personal Safety 6
1.3 Device Safety 7
1.4 Mechanical Safety 9
1.5 Electrical Safety 12
1.6 Operation Safety 13
1.7 Maintenance Safety 14
1.8 Transportation Requirements 14
1.9 Storage Requirements 14

2 Overview 16

2.1 Product Intro 16
2.2 Appearance 19
2.3 Structure Layout 21
2.4 Component Description 24
2.5 Working Principles and Modes 33
2.6 Optional Components 38
2.7 Alarm Protection Function 46

3 Installation 56

3.1 Installation Process 56
3.2 Unpacking and Checking 57
3.3 Installation Preparation 58
3.4 Transportation 64
3.5 UPS Installation 65
3.6 Optional Components Installation 69
3.7 Electrical Connection 81
3.8 Verifying the Installation 97

4 Operation Guide 98

4.1 Single UPS Operation 98
4.2 Parallel System Operation 101
4.3 BSC System Operation 105

5 Touch Screen Operation 106

5.1 Menu Hierarchy 106
5.2 Main Page 108
5.3 System Working State 110
5.4 Buzzer Control 115

5.5 Main page 116
5.6 Info Manage 119
5.7 Setting Manage 124
5.8 Inverter ON/OFF 131

6 Maintenance and Troubleshooting 133
6.1 Manual Maintenance Operation 133
6.2 Replace Power Module 135
6.3 Maintenance Guide 137
6.4 Battery Test 145
6.5 Troubleshooting 147

7 Removing and Discarding UPS 149
7.1 Removing UPS 149
7.2 Discarding UPS 149

A Technical Specifications 150
A.1 UPS Technical Specifications 150
A.2 Component Technical Specifications 153
Dimensions and weights 154

B Acronyms and Abbreviations 156

BEFORE YOU START

About this manual

This manual describes the AEC IST6 200–500 kVA UPS: modular online double-conversion UPS, three-phase. It covers the features, controls, installation, operation, maintenance, transport and storage. Read it before you start, and keep it with the UPS for future reference.



IST6-200 / IST6-300



IST6-400 / IST6-500

up to 97 % system efficiency	**≦ 1.5 %** input THDi at full load
50 kW hot-swappable power modules	**0 ms** mains ↔ battery transfer

MODELS COVERED

- IST6-200 and IST6-300: 600 mm cabinet, up to 4 and 6 power modules of 50 kW (IST6-PM50); bypass module IST6-BM300
- IST6-400 and IST6-500: 1200 mm cabinet, up to 8 and 10 power modules of 50 kW; bypass modules IST6-BM400 and IST6-BM500

WHO THIS MANUAL IS FOR

Installers, electricians, IT and facility staff who install, operate and maintain the UPS. Electrical installation and any work inside the UPS must be done by qualified personnel, in line with IEC 60364 and the local wiring rules.

NOTE

- The IST6-200 and IST6-300 are similar; the IST6-300 is shown as the example.
- The IST6-400 and IST6-500 are similar; the IST6-500 is shown as the example.

Product standard: IEC 62040

Safety messages

Safety messages in this manual follow ISO 3864 / ANSI Z535. The signal word tells how serious the hazard is.

DANGER	A hazardous situation which, if not avoided, **will** result in death or serious injury.
WARNING	A hazardous situation which, if not avoided, **could** result in death or serious injury.
CAUTION	A hazardous situation which, if not avoided, could result in minor or moderate injury, or in damage to the equipment.
NOTE	Additional information that stresses or completes the text.
TIP	A hint that helps you solve a problem or save time.

Numbers in red circles on a picture are explained in the table or list that follows it. References in red, such as Figure 2-1 or Table 3-1, are links in the PDF. Figures are for reference only: the actual product may differ in detail.

Up and running

The short version: each step points to the full instructions. Read the safety chapter first.

1. **Read the safety instructions.** See Section 1.2, Personal Safety.
2. **Unpack and check the delivery.** See Section 3.2, Unpacking and Checking.
3. **Choose the place and prepare the cables and breakers.** See Section 3.3, Installation Preparation.
4. **Install and connect the UPS.** See Section 3.7, Electrical Connection.
5. **Start the UPS.** See Section 4.1.2, Start UPS.
6. **Check the display and the settings.** See Section 5.7, Setting Manage.
7. **Look after the UPS.** See Section 6.1, Manual Maintenance Operation.

01 CHAPTER 1 Safety Description

IN THIS CHAPTER

1.1 General Description
1.2 Personal Safety
1.3 Device Safety
1.4 Mechanical Safety
1.5 Electrical Safety
1.6 Operation Safety
1.7 Maintenance Safety
1.8 Transportation Requirements
1.9 Storage Requirements

AT A GLANCE **The safety rules of this chapter**



High voltage inside, also after the UPS is switched off: wait before opening it.



Installation, opening and service by qualified personnel only.



Batteries: never short-circuit them, keep them from fire, use only the specified type.



Electrostatic-sensitive boards: wear an earthed wrist strap.



Earth the UPS before connecting anything else.



No liquids or foreign objects inside the UPS.



In case of fire use a dry-powder extinguisher, never water or liquid.



Keep the air inlets and outlets free; respect the clearances.

1.1 General Description

⚠ CAUTION

- Before operating, please read the safety announcements and operation instructions in this manual carefully to avoid accident.
- Comply with local laws and regulations when installing, operating and maintaining the device. The "Danger", "Warning," "Caution ", and "Notice" statements described in this manual do not cover all the safety announcements. They are just only the supplement of local laws and regulations.

AEC is not liable in any of the following circumstances:

- Device damage due to force majeure such as earthquakes, floods, volcanic eruptions, debris flows, lightning strikes, fires, wars, armed conflicts, typhoons, hurricanes, tornadoes, and extreme weather conditions.
- Operation beyond the conditions specified in this manual.
- Installation or use in environments that do not comply with international, national, or regional standards.
- Installation or use by unqualified personnel.
- Failure to follow the operation instructions and safety announcements on the product and in this manual.
- Unauthorized modifications to the product or software code or removal of the product.
- Damage caused during transportation by you.

- Storage conditions that do not meet the requirements specified in this manual.
- Failure to comply with local laws, regulations, or related standards due to the materials and tools prepared by you.
- Damage caused by negligence, intentional breach, gross negligence or improper operation, or damage not caused by AEC.

1.2 Personal Safety

DANGER

Do not install or remove a cable with power on. Transient contact between the core of the cable and the conductor will generate electric arcs or sparks, which may cause a fire or personal injury.

DANGER

Before operations, remove conductive objects such as watches, bracelets, bangles, rings, and necklaces to prevent electric shocks.

DANGER

During operations, use dedicated insulated tools to prevent electric shocks or short circuits. The insulation and voltage resistance must comply with local laws, regulations, standards, and specifications.

WARNING

During operations, wear personal protective equipment such as protective clothing, insulated shoes, safety helmets, and insulated gloves.

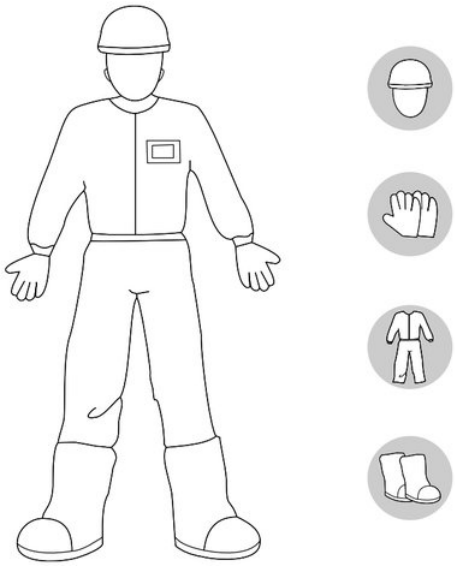

FIGURE 1-1 Personal protective equipment

- Only qualified professionals are allowed to install, operate and maintain device. Professionals must have a basic electricity knowledge, be familiar with the principles and construction of the device, have relevant experience in installation and operation, be trained in the safety of the system, and be able to recognize hazards and take the correct measures.
- Do not stop protective devices. Pay attention to the warnings, cautions, and related precautionary measures in this manual and on the device.

- Do not touch the power supply device directly or with conductors such as damp objects. Before touching any conductor surface or terminal, measure the voltage at the contact point to ensure that there is no risk of electric shock.
- Do not touch a running fan with your hands or tools. Otherwise, personal injury or device damage may occur.
- In the case of a fire, immediately leave the building or the device area and activate the fire alarm or call emergency services.

1.3 Device Safety

1.3.1 UPS Safety

> **NOTE**
> Category C3 UPS are used in all commercial, light industrial, and industrial areas that are not directly connected to the low-voltage power supply system that feeds residential buildings and may require installation restrictions or additional measures to prevent disturbances.

- For power supply systems that are critical to significant economic interests or public order, such as the national computing center, emergency command center, railway signal system and control center, civil aviation and air traffic control center, airport command center, financial clearing center, and transaction center, the TIER4 or TIER3 power architecture specified in TIA-942 must be used. That is, two power supplies must be used to supply power to loads.
- The UPS shall not be located in non-confined environments within 0~3.7 km away from the ocean or indoor or semi-indoor environments where the temperature and humidity are not controllable, such as shelters, civil houses, garages, corridors, and direct ventilation cabinets near the ocean; or houses with only roofs, railway station platforms, gymnasiums, and aquariums.
- It is recommended that the UPS be powered on as soon as possible after it is unpacked.
- The UPS can be used to serve resistive-capacitive loads, resistive loads, and micro- inductive loads. It is recommended that the UPS not be used for pure capacitive loads, pure inductive loads, or half-wave rectification loads, such as air conditioners, hair dryers, starters, drills, motors, fluorescent lamps. The UPS does not apply to regeneration loads.
- The upstream power distribution of the UPS must meet the requirements of protection against electric shock specified in IEC 60364-4-41.
- A circuit breaker equipped with a residual current device (RCD) is not recommended.
- If the root mean square (RMS) of a phase voltage of the mains exceeds 320 VAC, the UPS may be damaged.
- During maintaining UPS, set the output to maintenance bypass mode. To avoid power failure or load damage, ensure that the bypass input is within the specified power supply range.
- Manually performing the inverter power-off, or adjusting the UPS output voltage system or output frequency may affect the power supply to load.

1.3.2 Battery Safety

> **DANGER**
> Battery operation should only be performed by professionals who are familiar with batteries and must be done with care. Battery operation by non-professionals is prohibited.

> **WARNING**
> Battery operation must be done according to battery instructions, especially battery cabling.

- The battery must not be used when the battery packaging is damaged, the battery terminals are dirty, corroded, rusted or the battery case is cracked, deformed or leaking liquid.
- Batteries must be with the same brand, the same model and the same number.
- Do not expose the battery to high temperature, direct sunlight, high humidity, high corrosive environment or heating device around.
- Do not allow the battery to be subjected to mechanical vibration, drop, collision, hard object piercing and pressure impact, so as not to cause battery damage or fire.
- Do not disassemble, modify or damage the battery, so as not to cause battery leakage, release flammable gas, fire or explosion.
- Do not pull battery terminals when transporting or installing batteries. Otherwise, battery connections may be damaged.
- Lead-acid battery will release flammable gases during operation. The battery installation location should be well ventilated and fire prevention measures should be taken to avoid fire.
- Battery connection must be secure and reliable. Tighten the terminals according to the torque provided in the text, and check whether it is tightened regularly, otherwise it may cause poor connection at the terminal, which may lead to arc pulling or heat gathering at the terminals, and eventually lead to fire.
- After discharging the battery, the battery should be charged in time, otherwise the battery may be damaged due to overdischarge.
- Check whether the battery is grounded. If yes, remove the grounding. Touching any part of the grounded battery may result in electric shock.
- Check that the charging voltage of the UPS matches the battery. If unsure, consult AEC technical support.
- Do not connect the positive and negative poles of a battery or battery pack together, otherwise, it may cause battery short circuit. Do not touch any two terminals of the battery or the exposed end of the battery cables at the same time, otherwise, it may cause battery damage or personal injury. When installing and maintaining batteries, wrap the exposed cable terminals on the batteries with insulation tape.
- Prevent the lead-acid battery electrolyte from leaking.
  - Electrolyte is corrosive, which can corrode metal objects and boards, and causing board short circuit.
  - Electrolyte may cause skin irritation and chemical burns. If it accidentally comes into contact with the skin or eyes, flush with plenty of water immediately and go to the hospital for medical treatment.
  - If the electrolyte leaks, contact AEC technical support immediately. Professionals should wear goggles, rubber gloves, gas masks and protective clothing, and follow the battery manufacturer's instructions, or neutralise the electrolyte with sodium bicarbonate (NaHCO3) or sodium carbonate (Na2CO3).

> **NOTE**
>
> When the battery temperature exceeds 60°C, check whether the electrolyte leaks. If the electrolyte leaks, take proper measures promptly.

- At the end of the battery life, internal battery faults may occur, such as short circuit, electrolyte depletion or positive plate grid corrosion, etc. and continue to use may lead to thermal runaway, bulging or leakage of the battery, please replace the battery in time.
- When installing and debugging the battery, please equip with firefighting facilities, such as firefighting sand, carbon dioxide fire extinguishers, etc. in accordance with the requirements of the construction standards and specifications. When the battery is put into use, ensure that the battery room has a firefighting system that complies with local laws, regulations and specifications, has been constructed and debugged, and is in automatic control and manual control mode.
- Dispose of used batteries in accordance with local laws and regulations. Do not dispose of batteries as domestic waste.

1.4 Mechanical Safety

DANGER

When working at heights, wear a safety helmet and safety harness or waist belt and fasten it to a solid structure. Do not mount it on an insecure moveable object or a metal object with sharp edges. Make sure that the hooks will not slide off.

WARNING

Ensure that all necessary tools are ready and inspected by a professional organization. Do not use tools that have signs of scratches or fail to pass the inspection or whose inspection validity period has expired. Ensure that the tools are secure and not overloaded.

WARNING

Before installing device in a cabinet, ensure that the cabinet is securely fastened with a balanced gravity center. Otherwise, tipping or falling cabinets may cause bodily injury and device damage.

WARNING

When pulling device out of a cabinet, be aware of unstable or heavy objects in the cabinet to prevent injury.

WARNING

Do not drill holes into the device. Doing so may affect the sealing performance and electromagnetic containment of the device and damage components or cables inside. Metal shavings from drilling may short-circuit boards inside the device.

- Repaint any paint scratches caused during device transportation or installation in a timely manner. Device with scratches cannot be exposed for an extended period of time.
- Do not weld, cut or carry out similar work on the device without AEC's assessment.
- Do not install other components on top of the device without AEC's assessment.
- When performing operations over the top of the device, take measures to protect the device against damage.
- Use correct tools and operate them in the correct way.

MOVING HEAVY OBJECTS

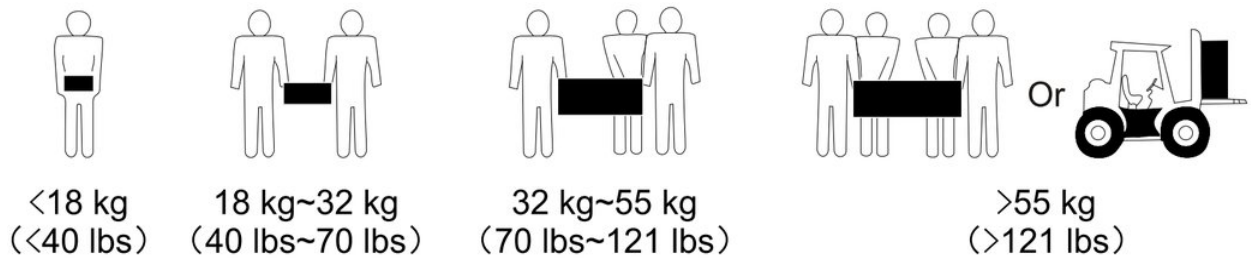

FIGURE 1-2 Moving heavy objects

- To move a device by hand, lift the device slowly and stably. Do not lift it suddenly or turn or twist your body.
- Move or lift the device by holding its handles or lower edges.

- Move a heavy object stably with balanced force at an even and low speed. Put down the object stably and slowly to prevent any collision or drop that may cause scratches on the surface of the device or damage to the components and cables.
- When moving a heavy object, be aware of the workbench, slope, staircase, and slippery places. When moving a heavy object through a door, ensure that the door is wide enough to move the object and avoid bumping or injury.
- When moving large device, if the freight elevator cannot be used, keep the device vertical (inclination angle α≤15°), prohibit horizontal, and contact professionals to get a reasonable moving method.

WORKING AT HEIGHTS

> **NOTE**
> Any work performed 2 m or more above the ground is considered work at height.

- Do not work at heights when steel pipes are wet or other risky situations exist. After the preceding conditions no longer exist, the safety owner and relevant technical personnel need to check the involved device. Operators can begin working only after safety is confirmed.
- Set a restricted area and prominent signs for working at heights to warn irrelevant personnel away.
- Set guard rails and warning signs at the edges and openings of the area involving working at heights to prevent falling.
- Do not pile up scaffolding, springboards, or other sundries on the ground under the area involving working at heights. Do not stay or pass under the area involving working at heights.
- Personnel involving working at heights are not allowed to throw objects from the height to the ground, or vice versa. Objects shall be transported by slings, hanging baskets, highline trolleys, or cranes.
- Do not perform operations on the upper and lower layers at the same time. If unavoidable, install a dedicated protective shelter between the upper and lower layers or take other protective measures. Do not pile up tools or materials on the upper layer.
- Personnel working at height must strictly comply with the safety regulations. AEC is not responsible for any accident caused by violating the safety regulations for work at height.
- Behave cautiously when working at heights. Do not rest at heights.

USING LADDERS

> **NOTE**
> Use wooden or insulated ladders when you need to perform live-line working at heights.

- Platform ladders with protective rails are preferred. Single ladders are not recommended.
- Before using a ladder, check that it is intact and confirm its load bearing capacity. Do not overload it.
- Ensure that the ladder is securely positioned and held firm.
- When climbing up the ladder, keep your body stable and your gravity center between the side rails, and do not overreach to the sides.
- When a step ladder is used, ensure that the pull ropes are secured.
- If a single ladder is used, the recommended angle for the ladder against the floor is 75 degrees. A square can be used to measure the angle.
- If a single ladder is used, ensure that the wider end of the ladder is at the bottom, and take protective measures to prevent the ladder from sliding.
- If a single ladder is used, do not climb higher than the fourth rung of the ladder from the top.
- If you use a single ladder to climb up to a platform, ensure that the ladder is at least 1m higher than the platform.

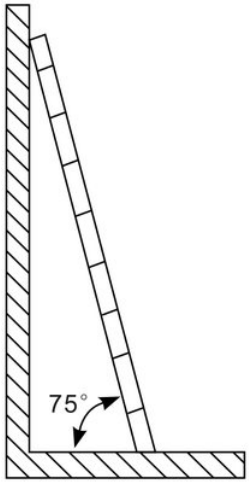

FIGURE 1-3 Single ladder requirements

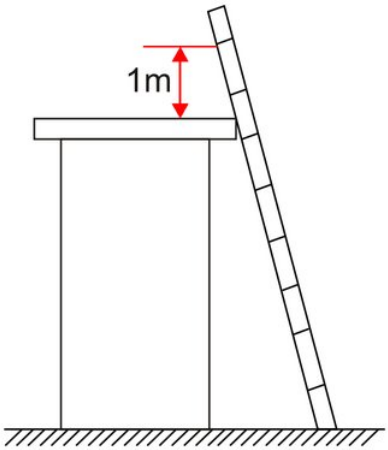

FIGURE 1-4 Single ladder requirements

HOISTING

Only trained and qualified personnel are allowed to perform hoisting operations.

- Install temporary warning signs or fences to isolate the hoisting area.
- Foundation where hoisting is performed meets the loadbearing requirements.
- Before hoisting objects, ensure that hoisting tools are firmly secured onto a fixed object or wall that meets the load-bearing requirements.
- During hoisting, do not stand or walk under the crane or the hoisted objects.
- During hoisting, do not drag steel ropes and hoisting tools or bump hoisted objects against hard objects.
- Angle between two hoisting ropes is no more than 90°.

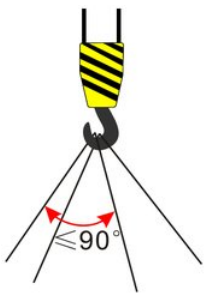

FIGURE 1-5 Hoisting requirements

1.5 Electrical Safety

DANGER

Before connecting cables, ensure that the device is intact. Otherwise, electric shocks or fires may occur.

WARNING

- Do not reversely connect the grounding wire and neutral wire, live wire and neutral wire, otherwise, it will cause short circuit.
- It should be well grounded and the voltage between grounding wire and neutral wire should be no more than 5V.

- Set warning signs or safety warning belts in the operation area to avoid personnel injury or device damage caused by irrelevant personnel.
- Follow the procedures described in this manual for installation, operation, and maintenance. Do not reconstruct or alter the device, add components, or change the installation sequence without permission.
- Before installing or removing power cables, turn off the switches of the device and its upstream and downstream switches.
- Incorrect electrical connections may cause device damage, which is not within the scope of the quality guarantee of the device.
- Even if all external powers are disconnected, there still exists residual charge on the capacitor inside the UPS, and there still exists high voltage on the output copper bar that may endanger personal safety. It is necessary to set the UPS aside for enough time (≥15 minutes) to release all charge before opening the UPS chassis.
- All electrical connections must comply with the local battery/region electrical connection standards.

NOTE

Any change to the UPS configuration, structure or components affects UPS performance. Consult AEC before making any change.

GROUNDING REQUIREMENTS

WARNING

The device must be grounded before connecting cables. The grounding terminal must be connected to earth.

- When installing device, it must be grounded first. When dismantling device, the grounding wire must be removed at last.
- Do not damage the earth conductor.
- Device must be connected to protection grounding permanently. Before operation, check the electrical connection to ensure the device is grounded reliably.

CABLING

- When selecting, installing, and routing cables, follow local safety regulations and rules.
- Select the flame spread cables.
- All cables are properly connected and insulated, and meet specifications.
- When routing cables, reserve at least 30 mm space between the cables and heat- generating components or areas. This prevents deterioration or damage to the cable insulation layer.
- Cables of the same type are bound together. When routing cables of different types, ensure that they are at least 30 mm away from each other.

- The surface layer of large bundles of wires should be straightened to eliminate crossover phenomenon. The wire bundle should be kept straight and the height of the cable tie of the horizontal wire bundle should be the same.
- When the bundled wires are turned, the cable ties should be tied on both sides of the corner.
- If a cable is connected to the cabinet from the top, bend the cable in a U shape outside the cabinet and then route it into the cabinet.
- When the temperature is low, violent impact or vibration may damage the plastic cable sheathing. To ensure safety, comply with the following requirements:
  - Cables can be laid or installed only when the temperature is higher than 0°C. Handle cables with caution, especially at a low temperature.
  - Cables stored at subzero temperatures must be stored at room temperature for at least 24 hours before they are laid out.

ESD

⚠ CAUTION

The static electricity generated by human bodies may damage the electrostatic sensitive components on boards, before contacting the electrostatic sensitive components (such as plug-in board, circuit board or IC chip, etc.), wear ESD gloves or a well-grounded ESD wrist strap.

- When holding a board, hold its edge without touching any components. Do not touch the components with bare hands.
- Pack boards with ESD packing materials before storing or transporting them.

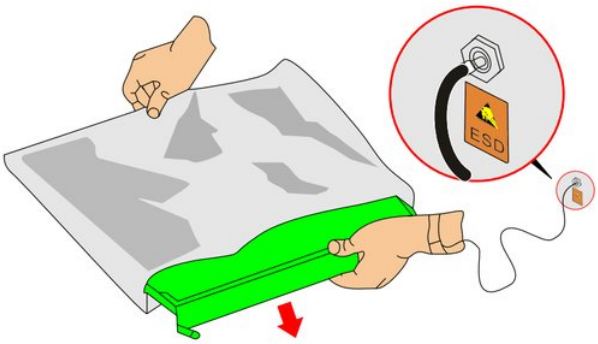

FIGURE 1-6 Board unpacking diagram

1.6 Operation Safety

⚠ DANGER

Device has high voltage, and accidental contact may result in electric shock.

Do not touch any terminals or components of the device while it is in operation, otherwise there may be a risk of electric shock.

1.7 Maintenance Safety

⚠ CAUTION

Improper maintenance operations may result in personal injury or device damage.

- Place warning signs or safety warning belts in the operation area to prevent irrelevant personnel from entering the maintenance site.
- Place warning signs where the switches are to avoid switching them on improperly.
- Before maintenance, ensure that there is no voltage or current in the UPS input and output. Wear protective equipment to maintain the UPS.
- Restart the device only after removing faults that affect the safety performance of the device.
- There is still a risk of burn after the device is shut down. After the device cools down, wear protective gloves before operating the device.
- Do not replace internal components of the UPS without authorisation. AEC accepts no warranty claim or liability for any damage caused.
- Danger of electric shock! Do not touch the contacts or terminals connected to the grid or devices.

1.8 Transportation Requirements

- The packaged products shall not be loaded in the open cabins and carriages during long distance transportation, shall not be stored in the open storage during transit, shall not be loaded with flammable, explosive and corrosion-prone items (or other transportation means) during transportation, and shall not be subjected to rain, snow or liquid substances and mechanical damage.
- Suitable for transport by car, train, ship and plane. The package must be in good condition to avoid dampness, dust, vibration and chemical corrosion during transportation.
- Do not stack.

1.9 Storage Requirements

- The device should be stored in the original packaging, and its storage environment temperature is -25 °C~55 °C, and relative humidity is 0%RH~95%RH. All kinds of hazardous gases, flammable and explosive substances and corrosive chemicals are not allowed in the warehouse, and it should be free from strong mechanical vibration, impact and strong magnetic field effect.
- The packing box should be at least 10cm away from the ground and at least 50cm away from the wall, heat source, cold source, window or air inlet. If the packing box is found to be bitten by worms or damaged, please replace it in time.
- The packing box cannot be tilted or inverted.
- If not specified otherwise, the storage period should be six months. If the storage period is more than six months, then batch by batch inspection should be re-conducted. For long term storage, the battery should be charged every three months.



FIGURE 1-7 Storage environment requirements

CAUTION

Please store the device according to the storage requirements, if the device is damaged due to the storage conditions do not meet the requirements, it will not be covered by the warranty.

CHAPTER 2

02 Overview

IN THIS CHAPTER

2.1 Product Intro
2.2 Appearance
2.3 Structure Layout
2.4 Component Description
2.5 Working Principles and Modes
2.6 Optional Components
2.7 Alarm Protection Function

THE UPS AT A GLANCE



Front: touch screen and status lamp



Doors open: modules and switches



Rear

2.1 Product Intro

The IST6 200–500 kVA UPS is an online double-conversion UPS system, that consists of power modules, bypass modules, system control box and distribution unit. Mainly used in finance, communication, data center, transportation, government, medical, securities, energy, military and other important fields. The whole system adopts modular design with unique redundant parallel technology to ensure the high availability of power supply, which becomes an important power protection for stable power operation and power quality improvement.

2.1.1 Typical Configuration

TABLE 2-1 UPS typical configuration

Configuration	Application scenario
Single UPS	Supplies power to common loads, with multi-module redundancy and high reliability.
Parallel system	Supplies power to large-sized data centers or important loads, with high reliability and strong transient overload resistance capability.
BSC system	• Supplies power to important loads, such as medium and large computer rooms, data centers, etc., with higher reliability than the parallel system, but the configuration is more complex. • BSC systems include dual bus mode and multi-bus mode.

SINGLE UPS

In the single UPS mode, different numbers of power modules can be selected according to different load capacities. Average load among modules, if one power module is faulty, other power modules continue working. Multi-module redundancy configuration will have high reliability in single UPS mode.

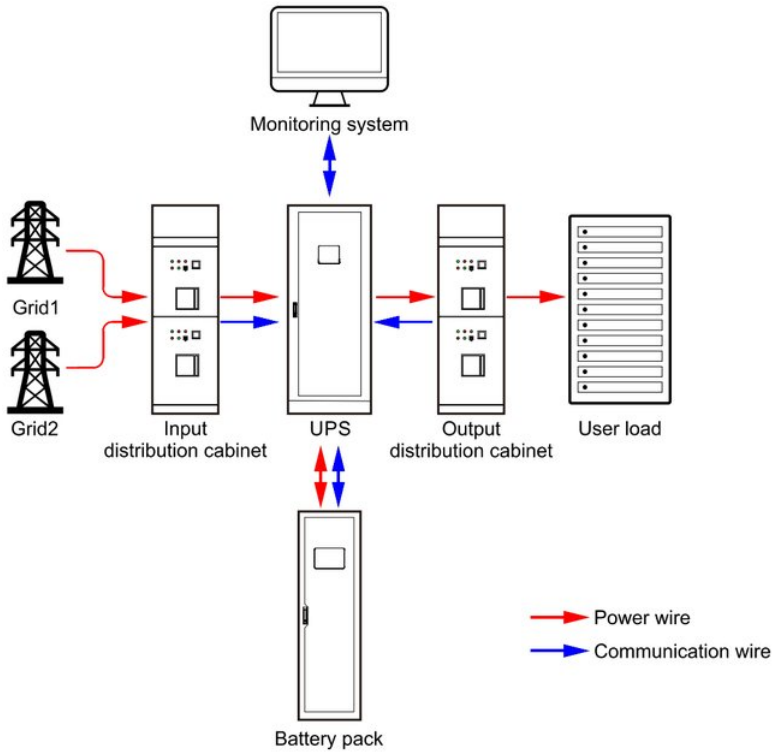

FIGURE 2-1 Typical application scenario in the single UPS mode

PARALLEL SYSTEM

In the parallel system mode, mains input, bypass input, and AC output terminals of UPSs are connected in parallel. Central Control Modules (CCMs) on different UPSs are connected over parallel cables to synchronize UPS outputs to supply power to loads. If one UPS fails, another UPS continues supplying power to loads, which ensures system reliability.

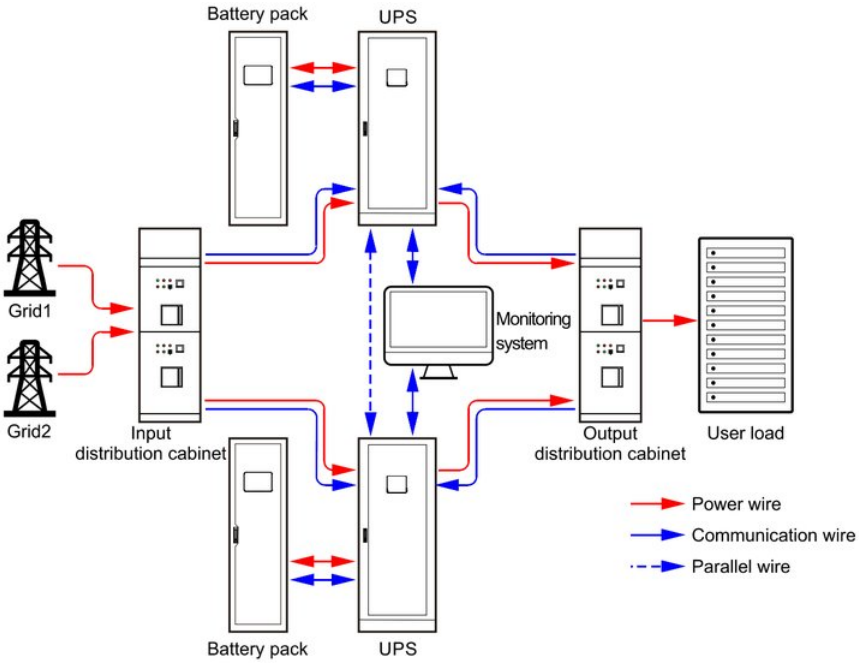

FIGURE 2-2 Typical application scenario in the parallel system mode

BSC SYSTEM

Bus Sync Controller (BSC) synchronizes the output of multiple power supplies under different bus inputs to ensure load input continuity when the UPS fails through software. According to different application scenarios, the BSC system is divided into dual-bus mode and multi-bus mode. The multi-bus mode supports three buses.

- Dual-bus system

A dual-bus system consists of two independent UPS systems. Each UPS system consists of a UPS in the single UPS mode. The dual-bus system is suitable for dual-power load. For single- power load, a static transfer switch (STS) can be configured to ensure the power switch when the bus fails, which greatly improves the system reliability.

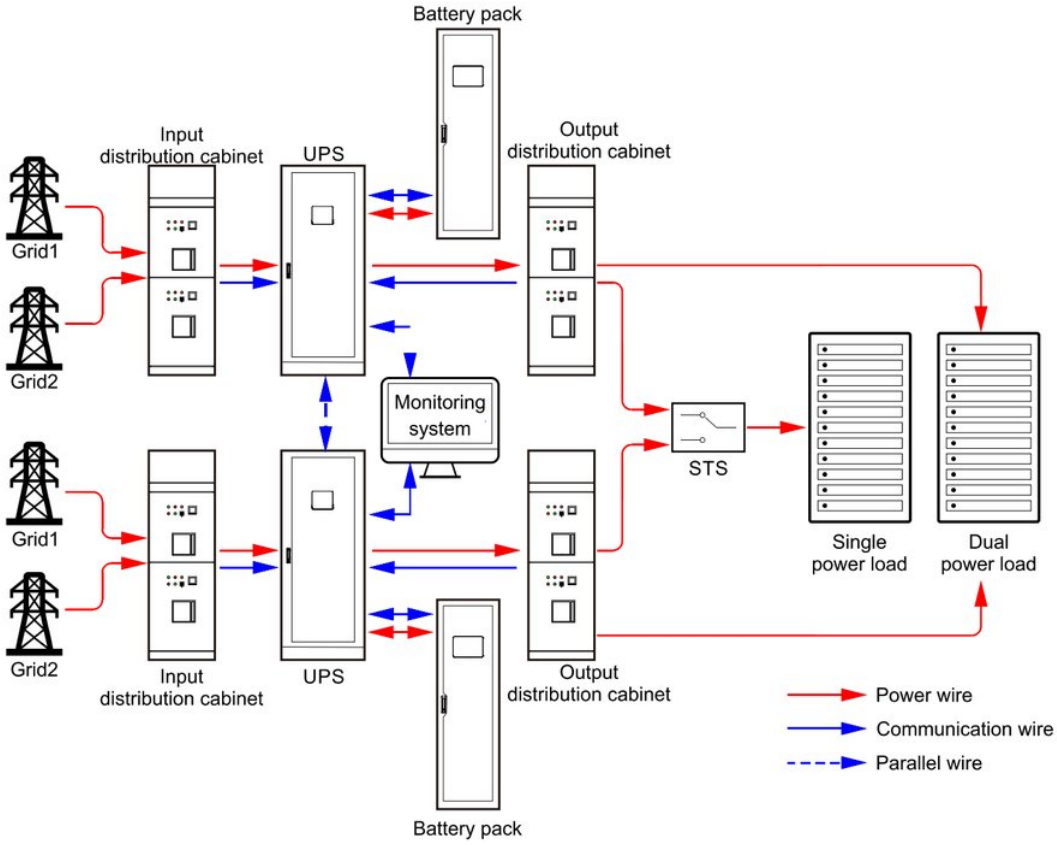

FIGURE 2-3 Typical application scenario in the dual-bus system mode

- Multi-bus system

A multi-bus system consists of multi-independent UPS systems. Each UPS system consists of a UPS in the single UPS mode. The multi-bus system is suitable for dual-power load. For single-power load, a static transfer switch (STS) can be configured to ensure the power switch when the bus fails. Multi-bus system has higher reliability than single-bus system, but less reliable than dual-bus system.

> **NOTE**
> Multi-bus systems can be run on either a single UPS or a parallel system.

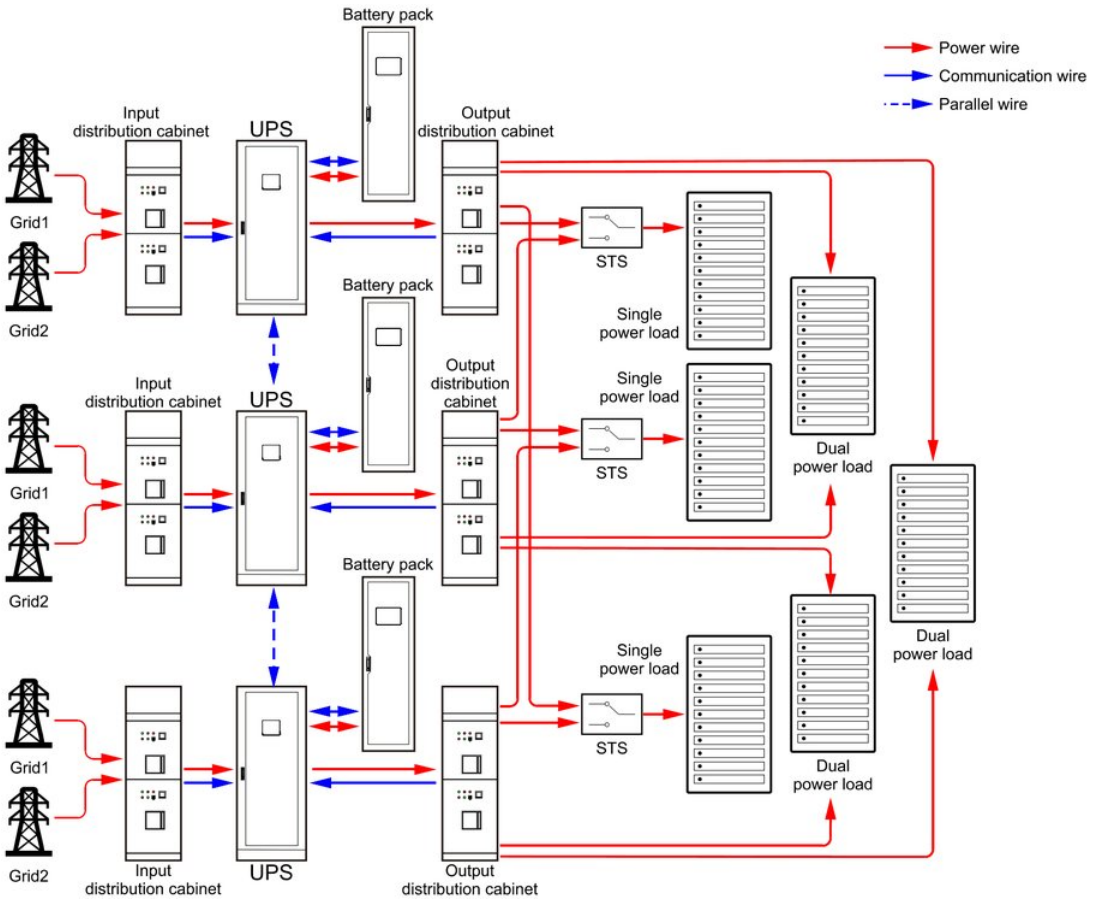

FIGURE 2-4 Typical application scenario in multi-bus system mode

2.2 Appearance

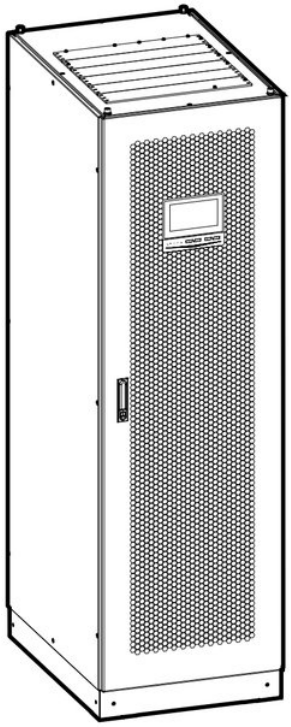

FIGURE 2-5 Appearance of IST6-200, IST6-300

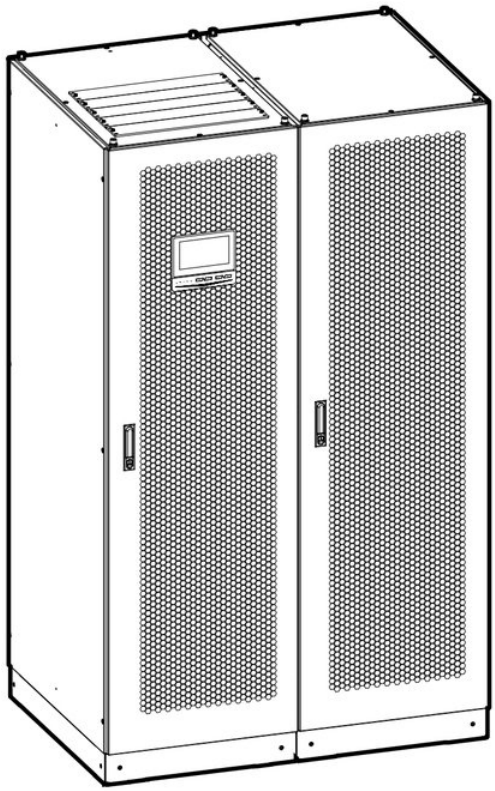

FIGURE 2-6 Appearance of IST6-400, IST6-500

OPERATION PANEL

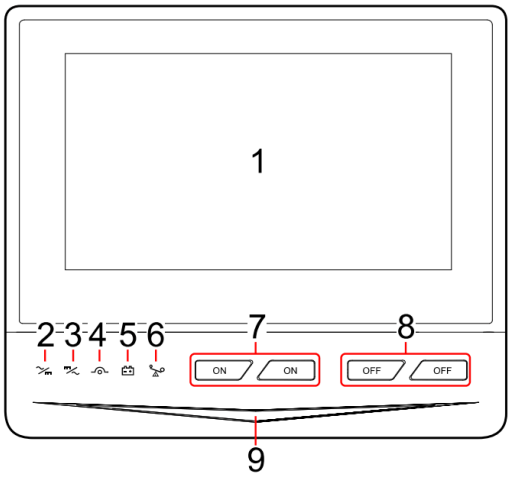

FIGURE 2-7 Operation panel

TABLE 2-2 Operation panel description

No.	Marking	Name	Description
1	-	Touch screen	Display the running parameters (e.g. voltage, current, load capacity, etc.) and state.
2		AC/DC indicator	• On (green): Rectifier works normally. • On (red): Rectifier works abnormally.
3		DC/AC indicator	• On (green): Inverter works normally. • On (red): Inverter works abnormally.
4		Bypass indicator	• On (green): Bypass outputs normally. • On (red): Bypass is abnormal.
5		Battery indicator	• On (green): Battery output. • On (red): Battery low-voltage.
6		Load indicator	• On (green): Output normal. • On (red): Output overload
7	ON	ON combination button	Press the two buttons for 3s to power on UPS.
8	OFF	OFF combination button	Press the two buttons for 3s to power off UPS.
9	-	Status lamp	• On (blue): UPS works normally. • Flashing (blue): Battery output. • On (yellow): UPS is abnormal but does not affect the working. • On (red): UPS is abnormal and does not work.

SYMBOL ON THE DEVICE

TABLE 2-3 Symbol description

Symbol	Meaning
	No trampling
	High leakage hazard
	Beware of electric shock
	Please refer to the user manual when using
	Ten years environment symbol
	Device grounding symbol

⚠ WARNING

All safety symbols, warning labels, and nameplates on UPS must be clearly visible and cannot be removed or covered.

2.3 Structure Layout

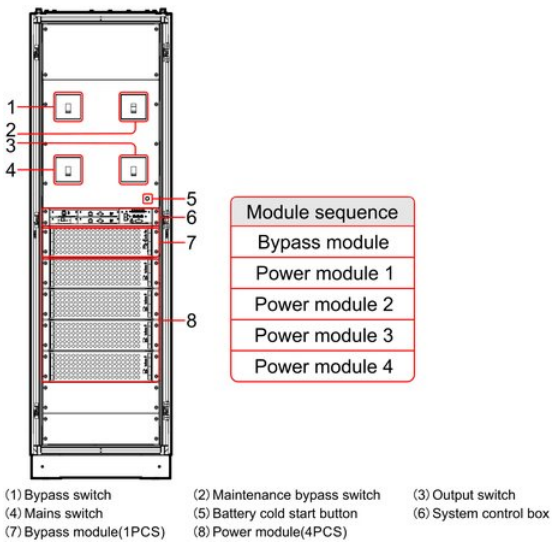

FIGURE 2-8 Structure layout of IST6-200 (Top wiring)

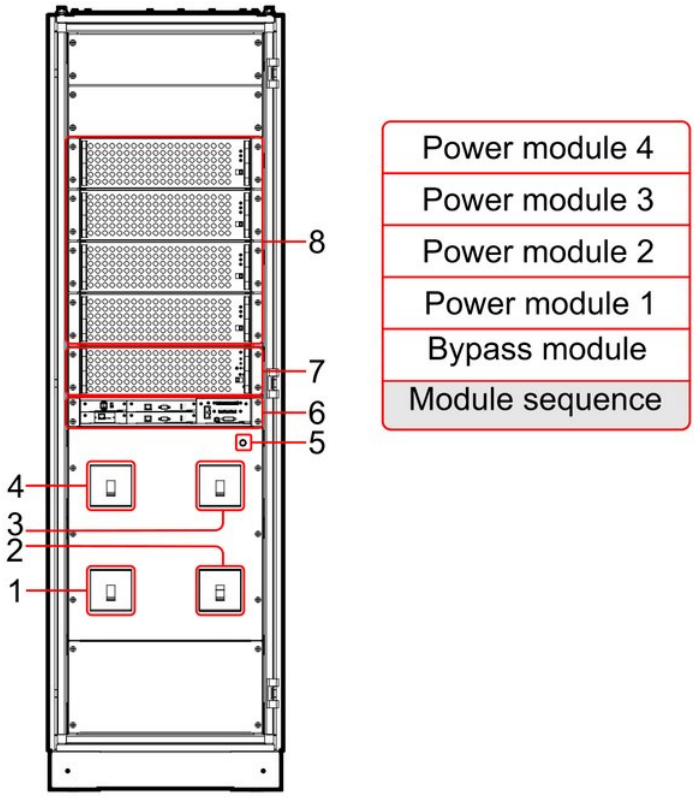

(1) Bypass switch
(2) Maintenance bypass switch
(3) Output switch
(4) Mains switch
(5) Battery cold start button
(6) System control box
(7) Bypass module (1PCS)
(8) Power module (6PCS)

FIGURE 2-9 Structure layout of IST6-200 (Bottom wiring)

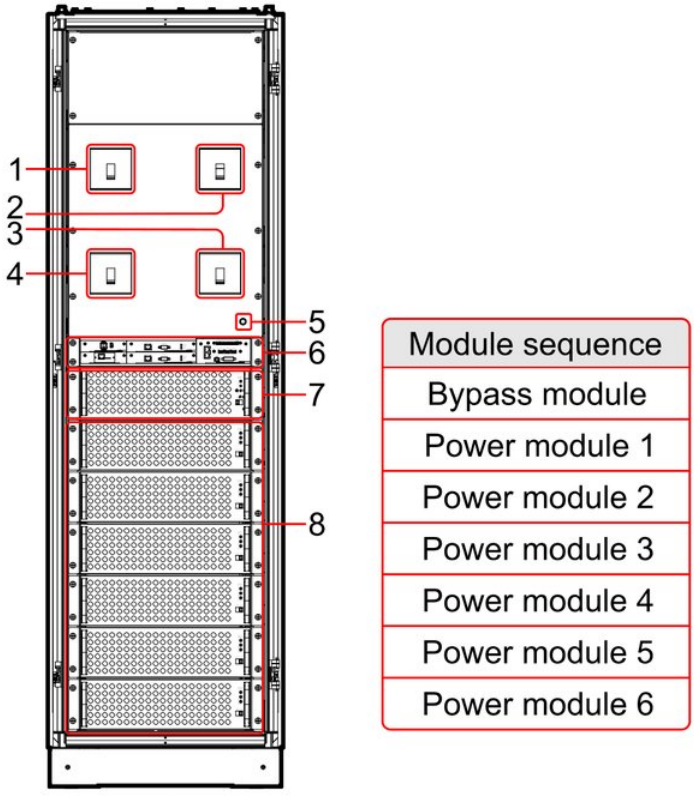

(1) Bypass switch
(2) Maintenance bypass switch
(3) Output switch
(4) Mains switch
(5) Battery cold start button
(6) System control box
(7) Bypass module (1PCS)
(8) Power module (6PCS)

FIGURE 2-10 Structure layout of IST6-300 (Top wiring)

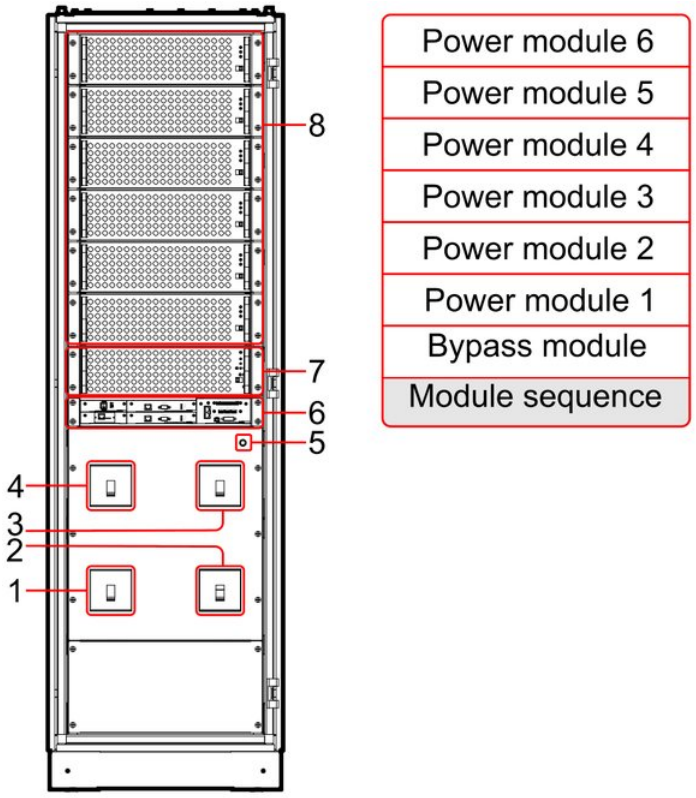

(1) Bypass switch
(2) Maintenance bypass switch
(3) Output switch
(4) Mains switch
(5) Battery cold start button
(6) System control box
(7) Bypass module (1PCS)
(8) Power module (6PCS)

FIGURE 2-11 Structure layout of IST6-300 (Bottom wiring)

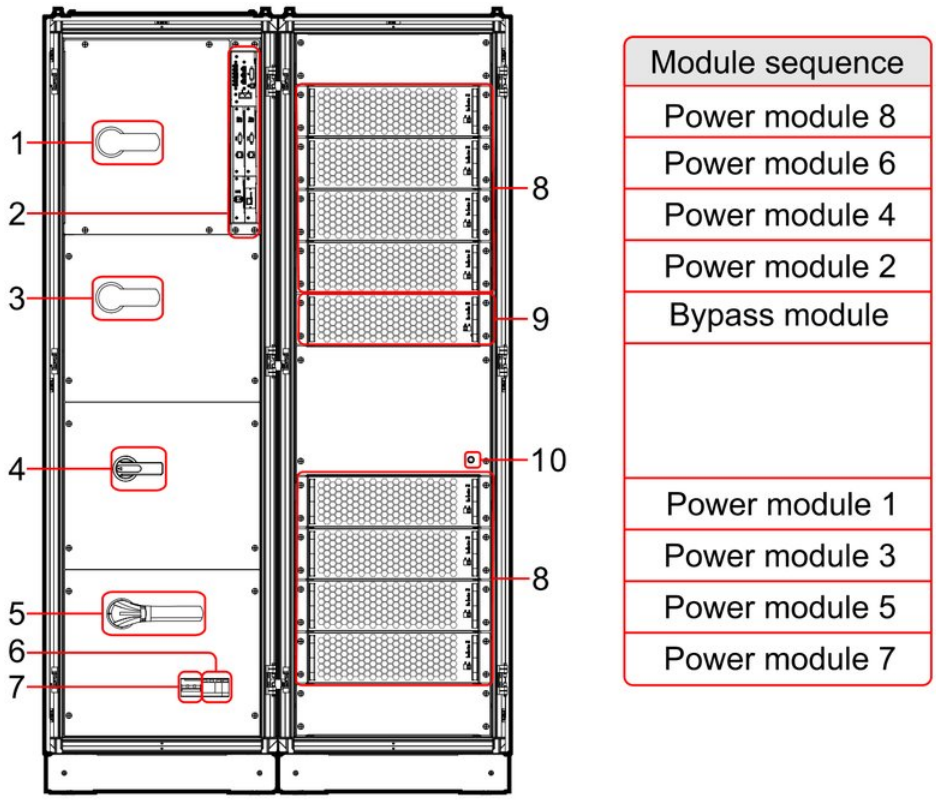

(1) Output switch
(2) System control box
(3) Maintenance bypass switch
(4) Bypass switch
(5) Mains switch
(6) SPD (optional)
(7) SPD switch (optional)
(8) Power module (8PCS)
(9) Bypass module (1PCS)
(10) Battery cold start button

FIGURE 2-12 Structure layout of IST6-400

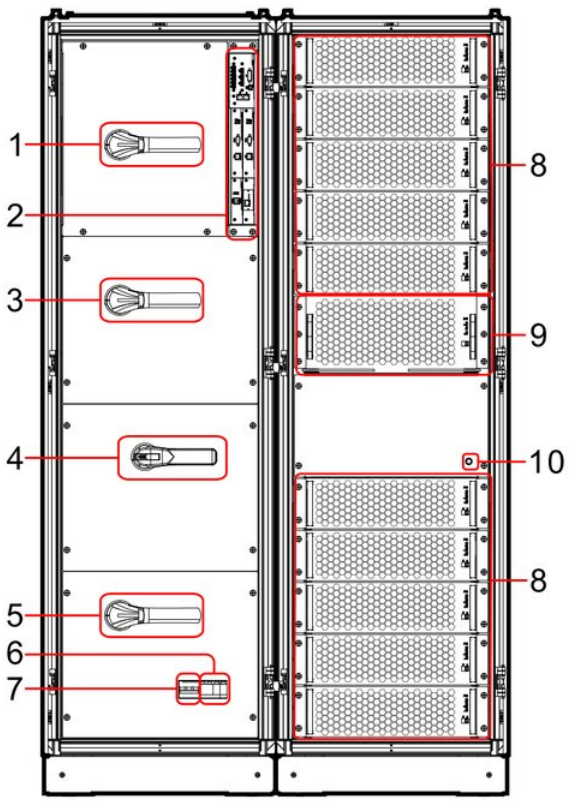

Module sequence
Power module 10
Power module 8
Power module 6
Power module 4
Power module 2
Bypass module
Power module 1
Power module 3
Power module 5
Power module 7
Power module 9

(1) Output switch
(2) System control box
(3) Maintenance bypass switch
(4) Bypass switch
(5) Mains switch
(6) SPD(optional)
(7) SPD switch(optional)
(8) Power module(10PCS)
(9) Bypass module(1PCS)
(10) Battery cold start button

FIGURE 2-13 Structure layout of IST6-500

2.4 Component Description

2.4.1 Power Module

Power module mainly consists of rectifier, inverter and DC/DC converter, which is to convert the mains input and battery input into a stable DC bus through the rectifier and DC/DC converter, and then convert the DC bus into a sine wave output through the inverter.

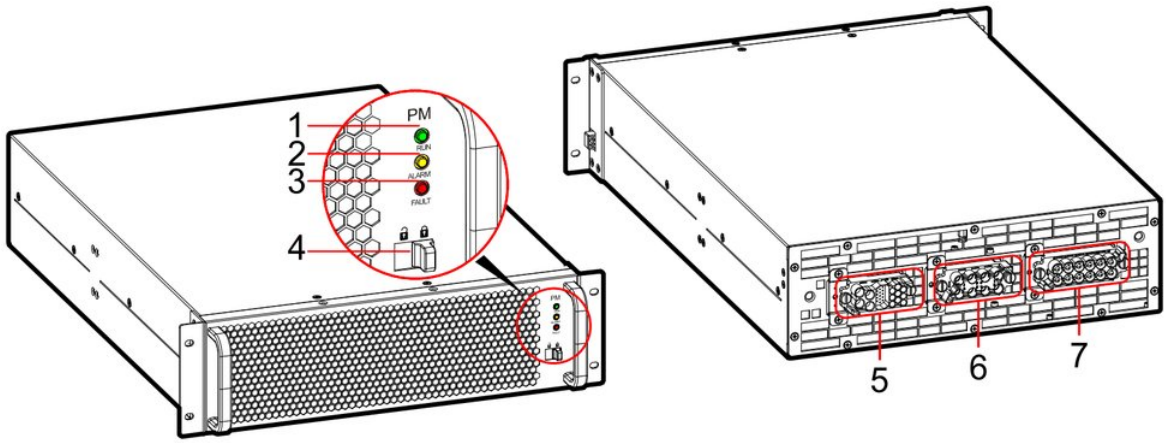

FIGURE 2-14 Appearance

TABLE 2-4 Power module description

No.	Marking Name	Color	Description
1	RUN Run ator	Green	• On: Power module is in the inverter state. • Flashing: Power module is in standby state. • Off: Power module is not in inverter state.
2	ALARM Alarm	indi Yellow	• On: Power module input voltage abnormal, fan abnormal, overload, etc. • Off: Power module has no alarm.
3	FAULT Fault cator	Red	• On: Power module is faulty. • Off: Power module is working properly.
4	- Ready	sw -	• Place the ready switch in state, the indication color is green, the power module is not locked with the cabinet, at this time, the power module can be dismantled. • Place the ready switch in " " state, the indication color is red, the power module is locked with the cabinet, at this time, the power module cannot be dismantled.
5	cation - port	-	External communication port with hot-swappable function.
6	- Output	po -	Connects to AC output of UPS.
7	- Input port	-	Connects to AC bypass input and DC battery input of UPS.

2.4.2 Bypass Module

Bypass module consists of static switch and filtering device. When abnormal conditions such as overload, over-temperature, etc. occur in the power module or when the system is abnormal, the static switch will switch the load power supply to be supplied by the bypass power supply; or when the UPS is working in ECO/WECO power supply mode and the bypass voltage is within the set range, bypass supplies power for load.

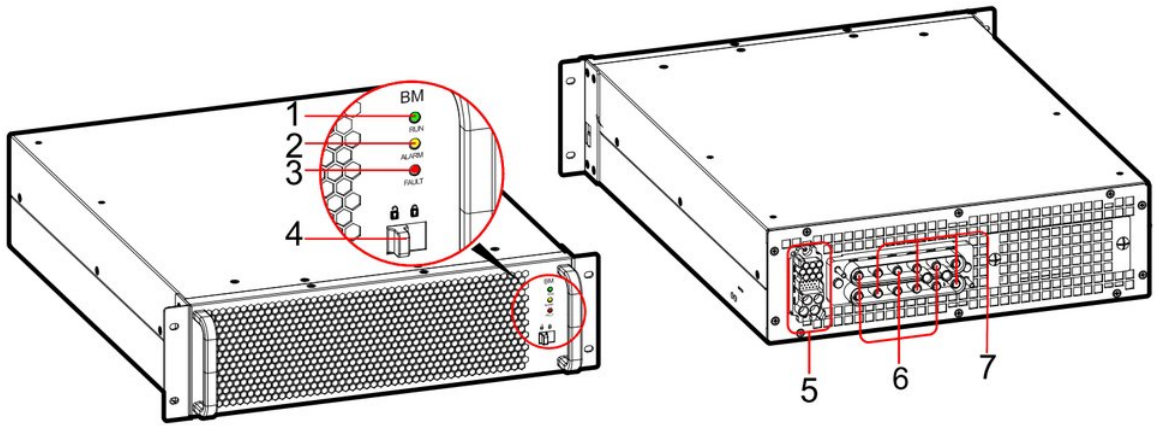

FIGURE 2-15 Appearance (applicable for IST6-200) (3U)

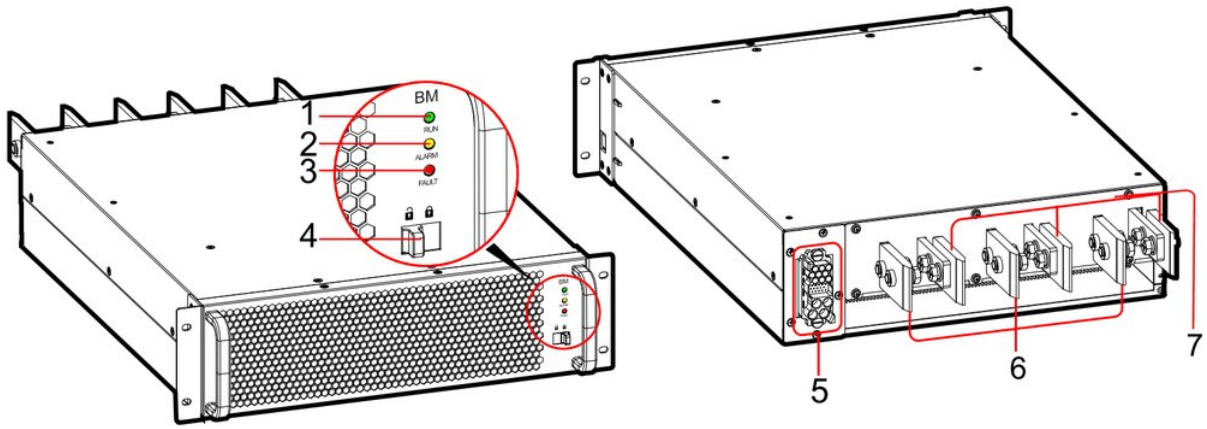

FIGURE 2-16 Appearance (applicable for IST6-300, IST6-400) (3U)

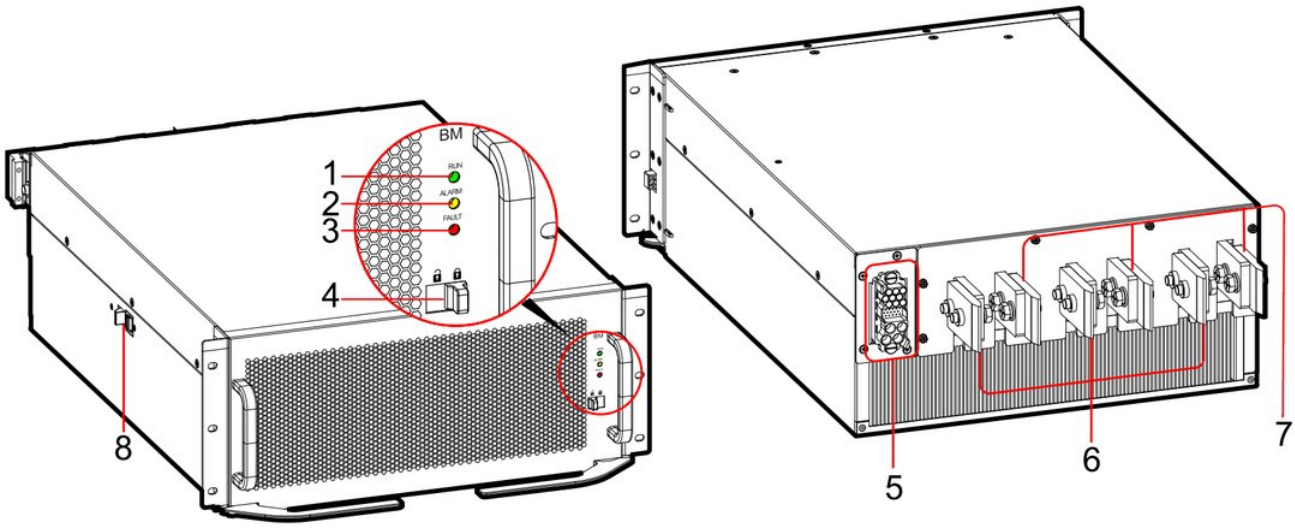

FIGURE 2-17 Appearance (applicable for IST6-500) (4.5U)

TABLE 2-5 Bypass module description

No.	Marking	Name	Color	Description
1	RUN	Run or	Green	• On: Bypass module is in the inverter state. • Flashing: Bypass module is in standby state. • Off: Bypass module is in off-line or fault state.
2	ALARM	Alarm ator	Yellow	• On: Bypass module input voltage abnormal, fan abnormal, overload, etc. • Off: Bypass module has no alarm.
3	FAULT	Fault tor	Red	• On: Bypass module is faulty. • Off: Bypass module is working properly.
4	-	Ready ch	-	• Place the ready switch in state, the indication color is green, the bypass module is not locked with the cabinet, at this time, the bypass module can be dismantled. • Place the ready switch in " " state, the indication color is red, the bypass module is locked with the cabinet, at this time, the bypass module cannot be dismantled.
5	-	ation port	-	External communication port with hot-swappable function.
6	-	Output port	-	Connects to AC output of UPS.

No.	M	Name	Color	Description
7 -		Input port	-	Connects to AC bypass input of UPS.
8 -		Limit lock	-	When unplugging the bypass module, press the limit lock to unplug the bypass module smoothly.

2.4.3 System Control Box

System control box contains the expansion card (optional), SNMP card (optional), system control card 1, system control card 2, and system monitoring card. All five cards are hot- swappable.

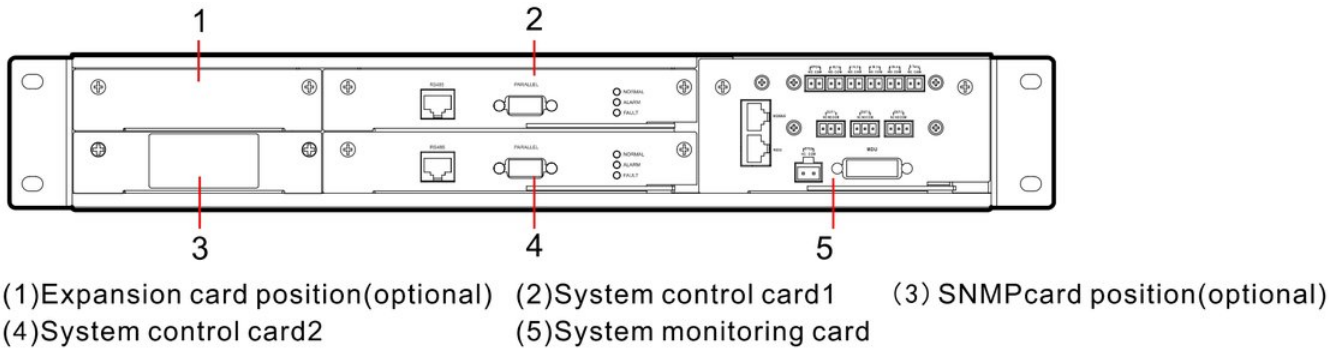

FIGURE 2-18 Appearance

SYSTEM CONTROL CARD

System control card centrally controls the operation logic and fault monitoring of the whole machine, and is the control brain of system. Intra-cabinet CAN communication with inter- cabinet CAN communication controls the synchronization and equalized current of all modules within and between cabinets to ensure the synchronous output of all power modules and equal load distribution, and provides the monitoring system with cabinet running state and fault information. The system control cards are hot swappable and backup for each other.

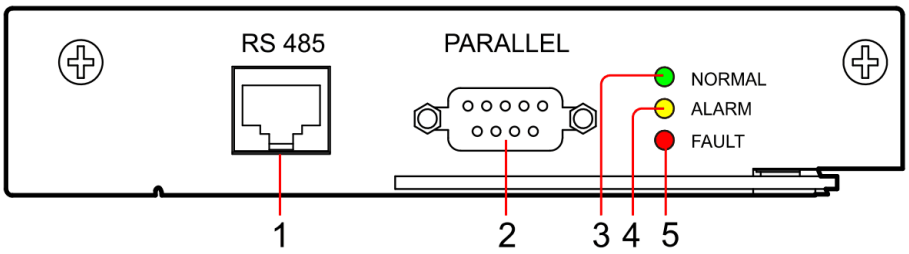

FIGURE 2-19 Appearance

TABLE 2-6 System control card description

No.	Marking	Name	Color	Description
1	RS485	RS485 port	-	Used for one machine to monitor the running information of other parallel systems. RS485 port is connected by an RJ45 plug, and its pin definition is shown in Figure 2-20. In parallel system, connect the RS485 ports together to implement the smart integrated display function, the connection is shown in Figure 2-21 and Figure 2-22.
2	PARALLEL	Parallel/BSC port	-	Inter-cabinet parallel /BSC signal port
3	NORMAL	Run indicator	Green	• On: The system controller card is in the primary card state. • Flashing: The system controller card is being initialized. • Off: The system controller card is faulty.
4	ALARM	Alarm indicator	Yellow	• On: The system controller card has an alarm signal. • Flashing: The system controller card is in the secondary card state. • Off: The system controller card has no alarm.
5	FAULT	Fault indicator	Red	• On: The system controller card is faulty. • Off: The system controller card works properly.

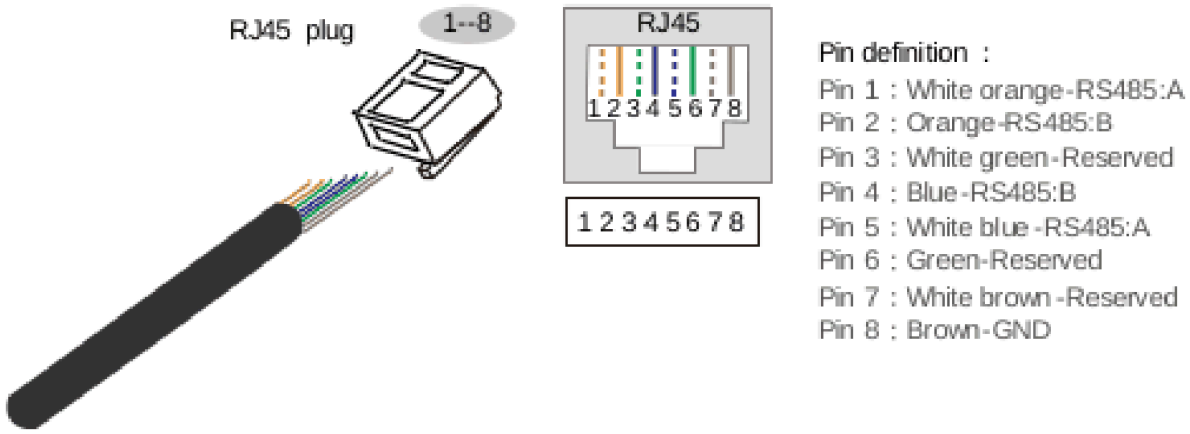

FIGURE 2-20 Pin definition of RS485 port

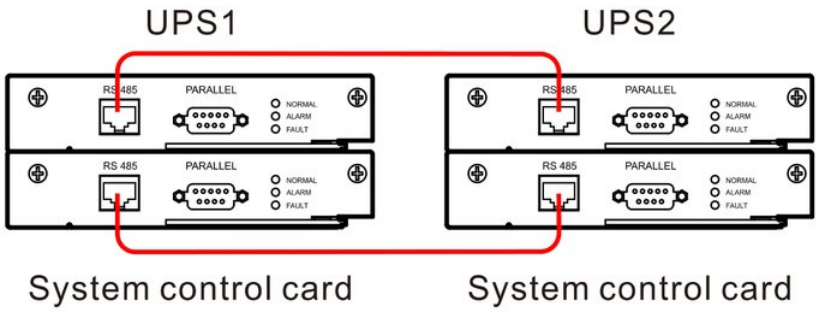

FIGURE 2-21 RS485 port connection (two UPSs)

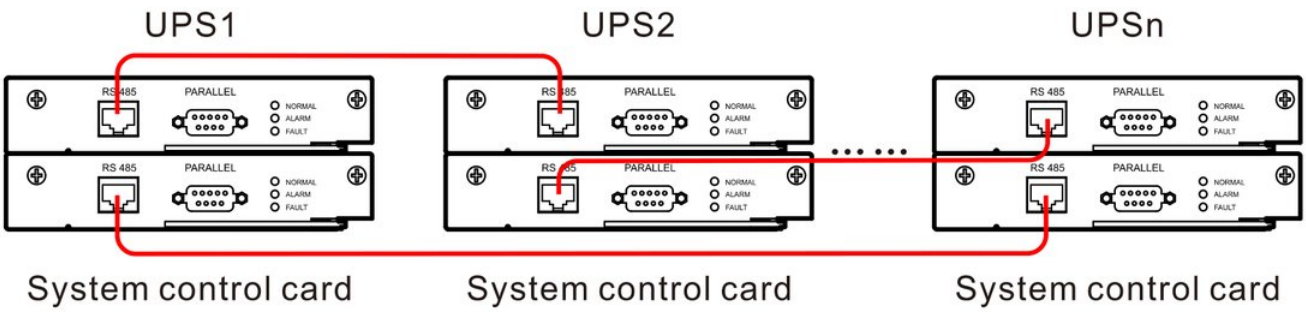

FIGURE 2-22 RS485 port connection (multiple UPSs)

SYSTEM MONITORING CARD

System monitoring card is a communication transfer module for system monitoring, providing external communication ports, dry contact control, battery temperature sampling and other functions. System monitoring card panel includes one MODBUS port, one RS232 port, one EPO1 port, four input dry contact signal ports, one battery temperature collection port, one EPO2 port, three output dry contact signal ports, and one HMI port.

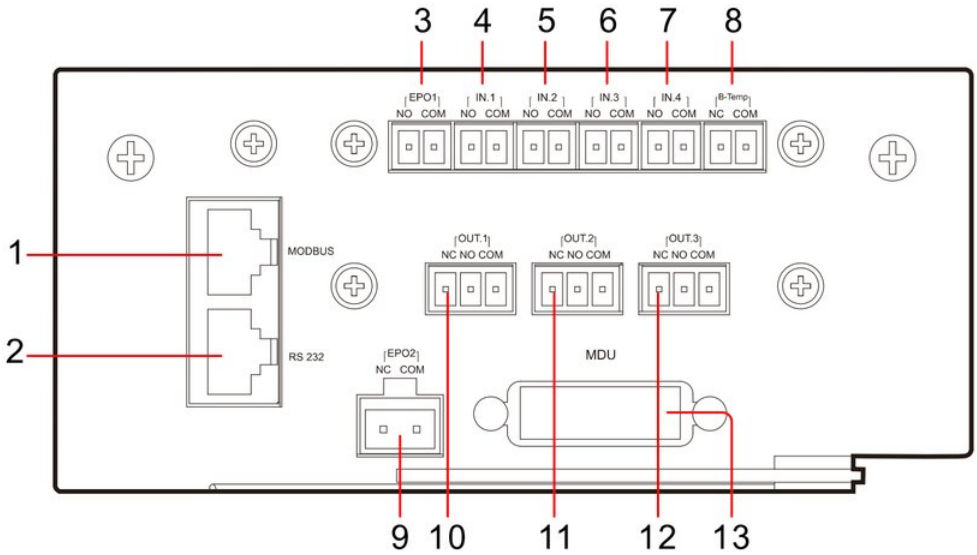

FIGURE 2-23 Appearance

TABLE 2-7 System monitoring card description

No.	Marking Principle	Name	Description
1	MODBUS -	MODBUS port	Used for MODBUS serial communication to realize the MODBUS communication function with the upper computer.
2	RS232	RS232 port	Used for RS232 serial communication to realize the communication function of the external SNMP card.
3	EPO1 NO	External EPO normally open input port	When NO and COM short- circuit, the signal is effective. The signal is preset and isn't settable.
	EPO1 COM	Common terminal (reinforced insulation from mains)	

No.	Marking		Principle	Name	Description
4	IN.1	NO	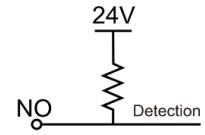	External switch normally open input port	• When NO and COM short-circuit, the signal is effective. • The four IN ports can be set according to user requirements in the ten dry contact definitions in Table 2-8.
		COM		Common terminal (reinforced insulation from mains)	
5	IN.2	NO		External switch normally open input port	
		COM		Common terminal (reinforced insulation from mains)	
6	IN.3	NO	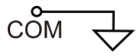	External switch normally open input port	
		COM		Common terminal (reinforced insulation from mains)	
7	IN.4	NO		External switch normally	
				open input port	
		COM		Common terminal (reinforced insulation from mains)	
8	B-Temp	NC	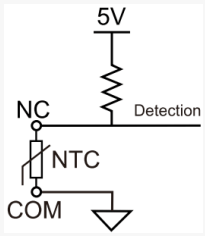	Battery temperature sensor (resistor) input	External temperature sampling wire. The signal is preset and isn't settable.
		COM		Common terminal (reinforced insulation from mains)	
9	EPO2	NC	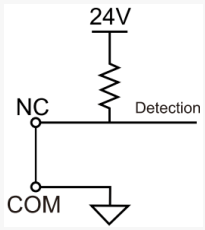	External EPO normally closed input port	Trigger EPO2 operation: 1. Short-circuit the CN8 of the system monitoring card with a 2P short cap, as shown in Figure 2-24. 2. Short-circuit NC and COM to make the system work normally. (If not operated, the touch screen displays "EPO abnormal" alarm.) 3. Disconnect NC and COM, the signal is effective. The signal is preset and isn't settable.
		COM		Common terminal (reinforced insulation from mains)	
10	OUT.1	NC	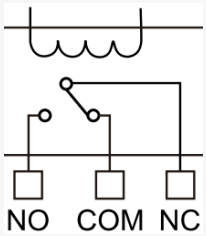	OUT.1 normally closed output port	• The max. voltage and current of the external power are 30VDC/2A. • When the signal is
		NO		OUT.1 normally open output port	

No.	Ma	P	Name	Description
			Common terminal (reinforced insulation from mains)	effective, COM short- circuit NO, and disconnect from NC. • The three OUT ports can be set according to user requirements in the eighteen dry contact definitions in Table 2-9.
11			OUT.2 normally closed output port	
			OUT.2 normally open output port	
			Common terminal (reinforced insulation from mains)	
12			OUT.3 normally closed output port	
			OUT.3 normally open output port	
	COM NC NO OU COM NC NO OU COM		Common terminal (reinforced insulation from mains)	
13 DU	-		HMI port	Used for HMI communication.

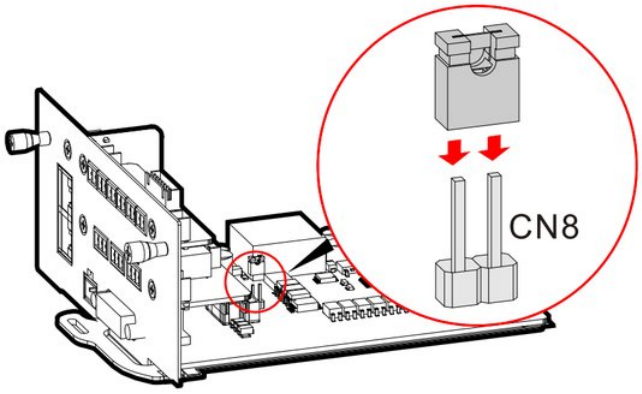

FIGURE 2-24 System monitoring card CN8 short circuit diagram

TABLE 2-8 Input dry contact definition

No.	Dry contact definition	Description
1	Battery abnormal	UPS generates an alarm and records the event when receiving a signal indicating battery abnormal. The charging function is disabled.
2	Battery grounding abnormal	Grounding abnormal signal
3	Battery switch off	Battery switch auxiliary contact
4	Bypass switch off	Bypass switch auxiliary contact
5	Generator mode	Generator start signal, UPS records this event.
6	SPD abnormal	Input SPD abnormal, UPS records this event.
7	Maintenance bypass open	Maintenance bypass open, UPS stops working.
8	Mains switch off	Mains switch auxiliary contact
9	Environment smog abnormal	When the smog sensor detects abnormality, UPS records this event.
10	Lamp belt switch off	Lamp belt off signal

TABLE 2-9 Output dry contact definition

No.	Dry contact definition	Description
1	Inverter mode	When UPS is in inverter output state, the dry contact is ON
2	Bypass mode	When UPS is in bypass output state, the dry contact is ON
3	Battery trip	When the battery trips, the dry contact is ON
4	Battery mode	When UPS is in battery output state, the dry contact is ON
5	Battery under-voltage alarm	When battery discharges to under-voltage alarm, the dry contact is ON
6	Battery under-voltage protection	When battery discharges to the under-voltage protection state, the dry contact is ON
7	Output overload	When UPS is in the overload state, this dry contact is ON.
8	UPS abnormal	When UPS is in the abnormal state, this dry contact is ON.
9	Bypass abnormal	When bypass is abnormal or cannot be traced, this dry contact is ON.
10	Mains abnormal	When mains is abnormal, this dry contact is ON.
11	Start generator	When generator starts, this dry contact is ON.
12	ECO mode	When UPS is in the ECO output state, this dry contact is ON.
13	Inverter abnormal	When UPS inverter is abnormal, this dry contact is ON.
14	UPS ON	When UPS is in ON state, this dry contact is ON.
15	Fan abnormal	When UPS fan is abnormal, this dry contact is ON.
16	UPS alarm	When UPS has an alarm, this dry contact is ON.
17	Bypass SCR abnormal	When UPS is in bypass SCR abnormality state, this dry contact is ON. Note: To enable the backfeed protection function, set "Setting manage > Dry Contact > Output > Output dry contact 3" on the touch screen to "Bypass SCR abnormal".

2.5 Working Principles and Modes

2.5.1 Working Principles

UPS is an online product with modular technology that is easy to maintain and expand. Module adopts smart control. Power module consists of rectifier, inverter and DC/DC converter, which converts the input into pure, high-quality sine wave output through high-frequency switching technology.

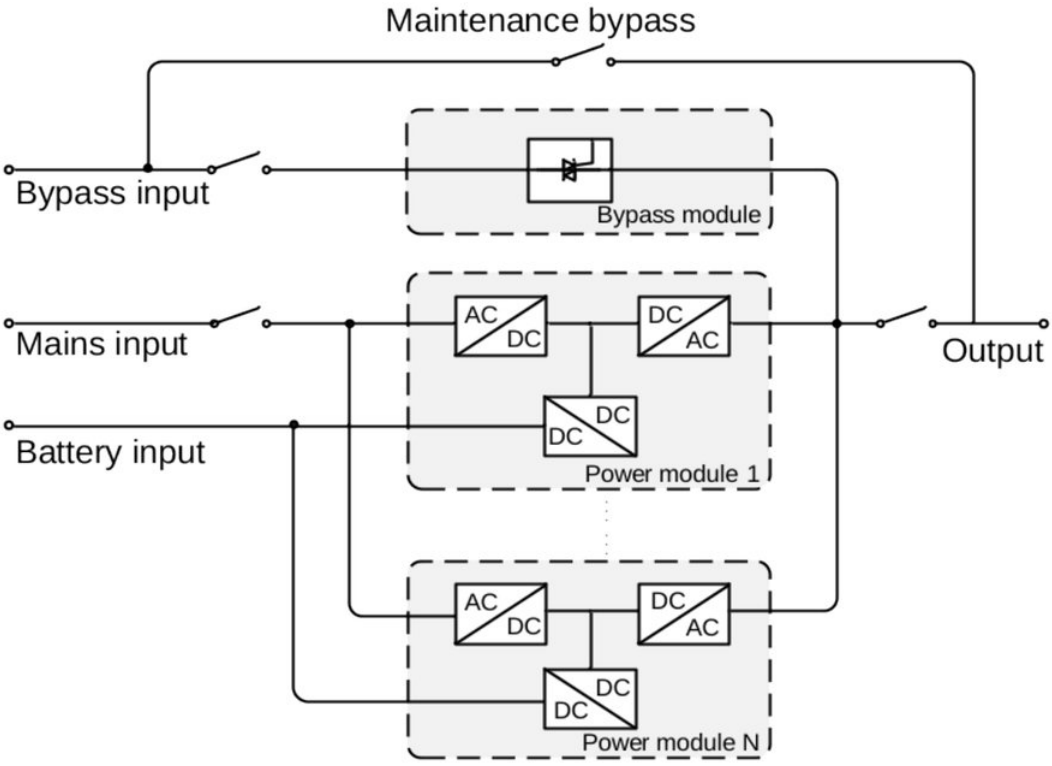

FIGURE 2-25 Schematic diagram

2.5.2 Working Modes

HOW IT WORKS **Operating modes at a glance**

Normal (online) mode

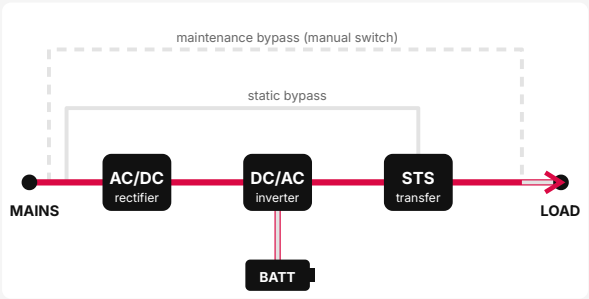

Mains present: the rectifier and the inverter supply the load with regulated power; the battery is kept charged.

Battery mode

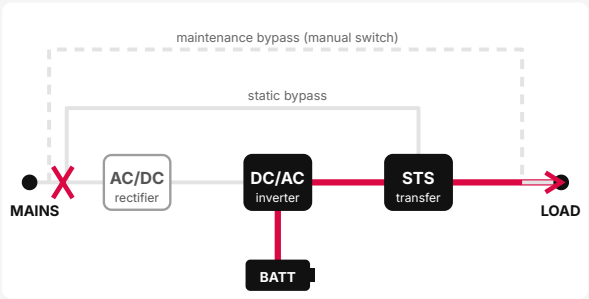

Mains outside its limits or missing: the battery feeds the inverter, with no break for the load.

Bypass mode

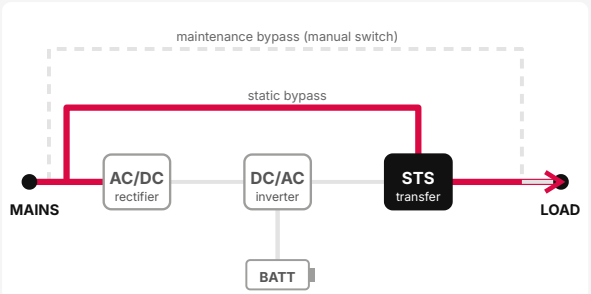

Overload, fault or inverter off: the load is supplied from the mains through the static bypass.

ECO mode

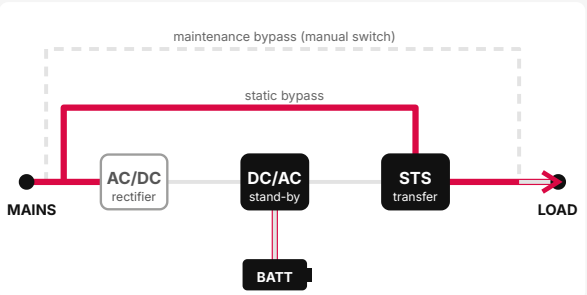

Mains inside the ECO window: the load runs on the bypass for the highest efficiency; the inverter takes over if the mains goes out of range.

Maintenance bypass

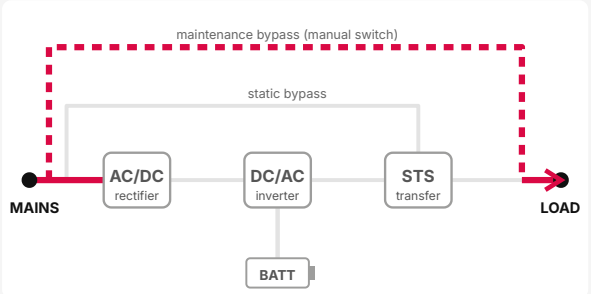

For service: the load is fed from the mains by the manual switch and the UPS can be switched off. Hazardous voltage stays on the terminals.

power flow working idle

MAINS MODE

The mains input is converted from AC to DC voltage by the rectifier, and then from DC to AC output by the inverter. After the two-stage conversion, the output voltage is with better accuracy and quality, which can prevent input harmonics, burrs, voltage transients and other interference affecting load. At the same time, the rectified bus charges the battery through the DC/DC converter.

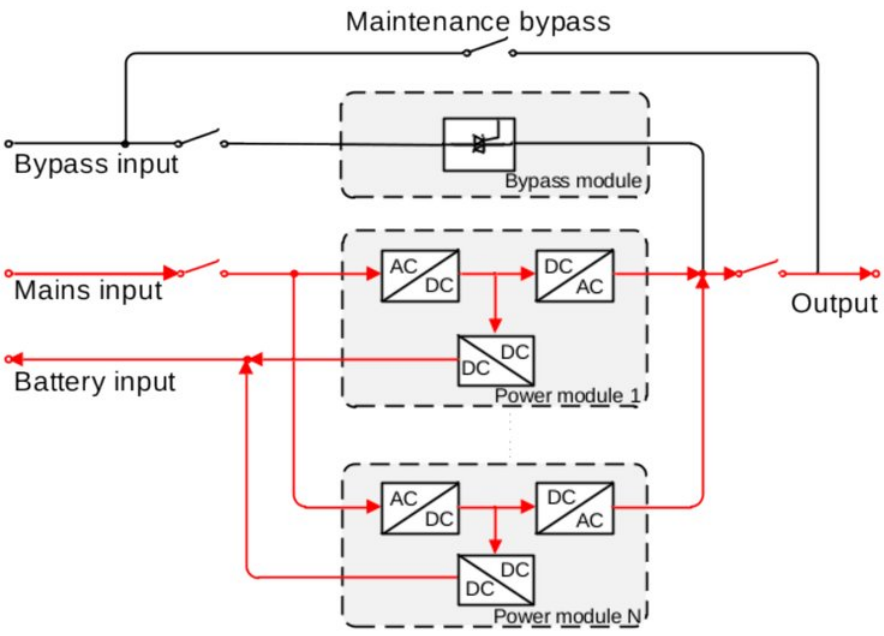

FIGURE 2-26 Mains mode

BATTERY MODE

When the AC input voltage or frequency of the rectifier is abnormal, UPS switches to battery mode. Power modules obtain energy from the battery, and the battery input is boosted by a DC/DC converter, and then converted to the AC voltage to output by inverter. Before the battery discharges completely, if the mains returns to normal, the rectifier switches to the mains input and charges the battery. When switching between grid power supply and battery power supply, the inverter output cannot power down. If the mains does not return to normal and battery energy is about to run out, UPS sends a sound & light alarm, stops the inverter at the lower limit of battery discharge, and long beeps to alarm. In this case, the load may be powered down.

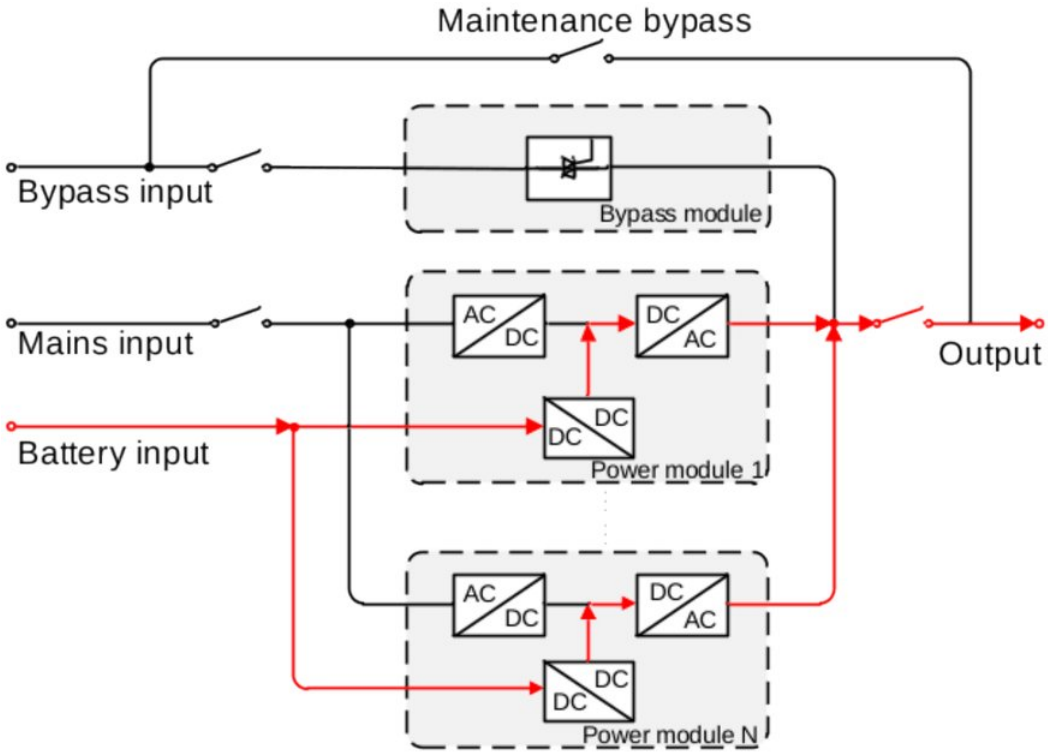

FIGURE 2-27 Battery mode

MAINS AND BATTERY SOURCE-SHARE MODE

When the mains input voltage is too low to support stable load operation, UPS automatically enters the mains and battery source-share mode. The mains and battery provide energy for power modules at the same time. Before the battery discharges completely, if the mains return to normal, UPS will switch to the mains mode again and charge the battery. If the mains does not return to normal and battery energy is about to run out, UPS sends a sound & light alarm, stops the inverter at the lower limit of battery discharge, and long beeps to alarm. In this case, the load may be powered down.

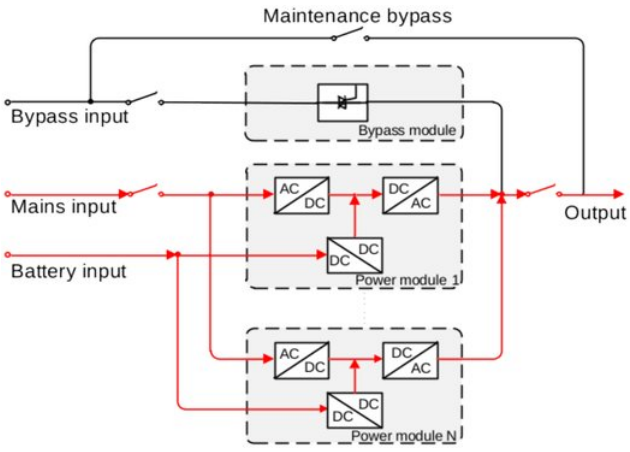

FIGURE 2-28 Mains and battery source-share mode

BYPASS MODE

When the system occurs abnormal conditions, such as high temperature, short circuit, abnormal output voltage or overload, and exceeds the tolerable range of the inverter, the inverter automatically shuts down to prevent damage. If the input is normal, the bypass module switches the load power supply to the bypass power supply. At the same time, the rectifier will continue to work normally and charge the battery through the DC/DC converter. During the bypass power supply, if the fault or overload is removed, the UPS re-inverts and switches to the inverter output. In bypass mode, the load power supply quality is not protected by UPS and may be affected by power failure, abnormal mains voltage, and abnormal input frequency.

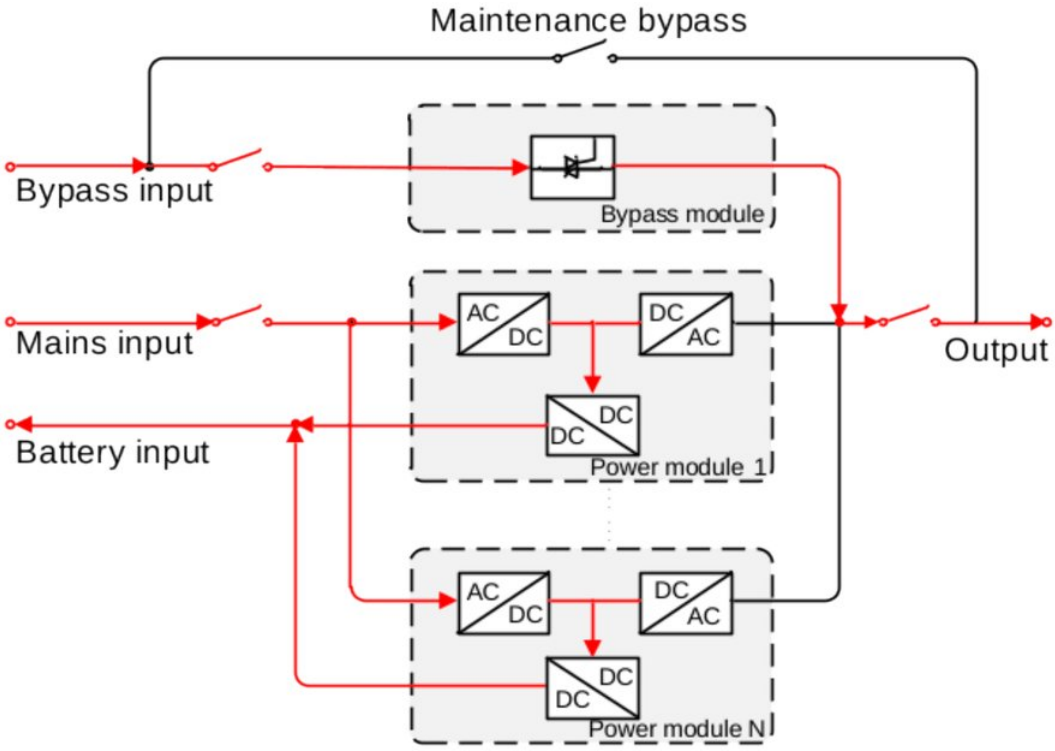

FIGURE 2-29 Bypass mode

ECO MODE

In ECO mode, when AC input is normal, the UPS supplies power to loads through static bypass. When the AC input is abnormal, UPS switches to the inverter output. This mode can be set manually via the touch screen. When the bypass source voltage and frequency are in the ECO range, the bypass static switch conducts. In this case, the bypass supplies power and the inverter is in standby mode. When the bypass source voltage or frequency is out of the ECO range, the load switches from the bypass output to the inverter output. Whatever it is bypass or inverter, the rectifier will be on and charge the battery via the DC/DC converter ECO mode not only ensures reliable power supply, improves efficiency, but also saves energy and costs.

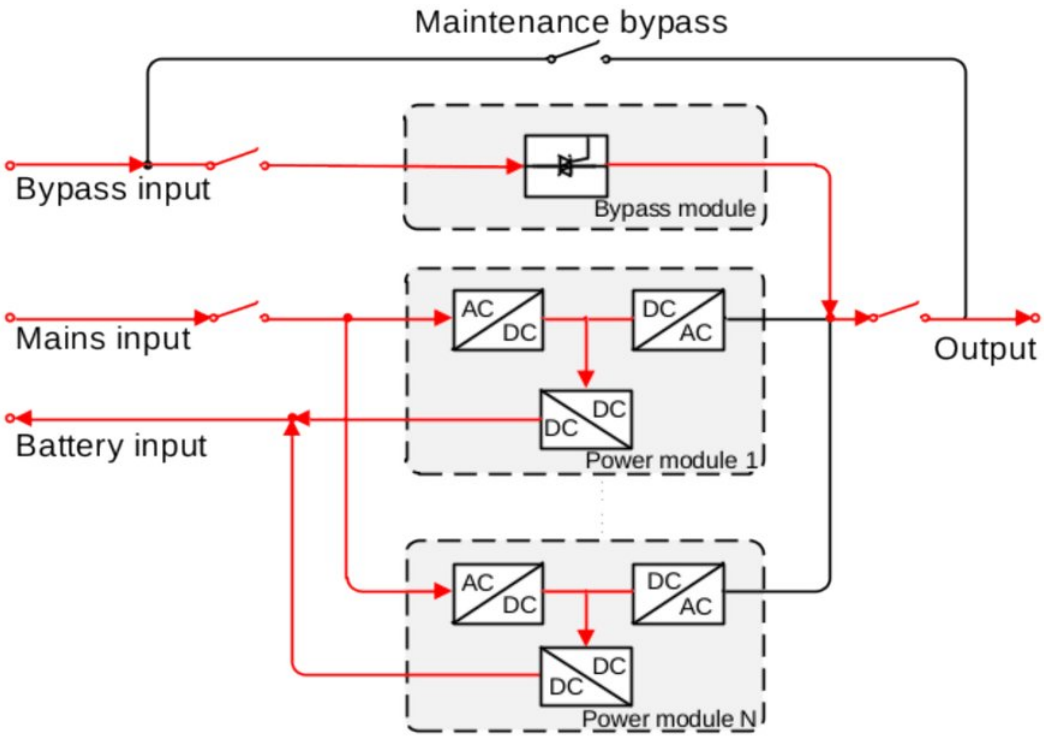

FIGURE 2-30 ECO mode

WECO MODE

In WECO mode, inverter performs grid-tied operation on the basis of ECO mode, so as to reduce the harmonic component of the input current and improve grid quality. This mode can be set manually via the touch screen. When the bypass source voltage and frequency are within the range of WECO, the bypass static switch conducts. In this case, the bypass supplies power, the power modules perform harmonics compensation for the bypass current, increases the PF value of the bypass current, and decreases the input THDi. When the bypass source voltage or frequency is not within the range of WECO, supply power for load switching from the bypass to inverter. Whatever it is bypass output or inverter output, the rectifier will be on and charge the battery via the DC/DC converter. WECO mode not only ensures high efficiency, but also reduces grid damage.

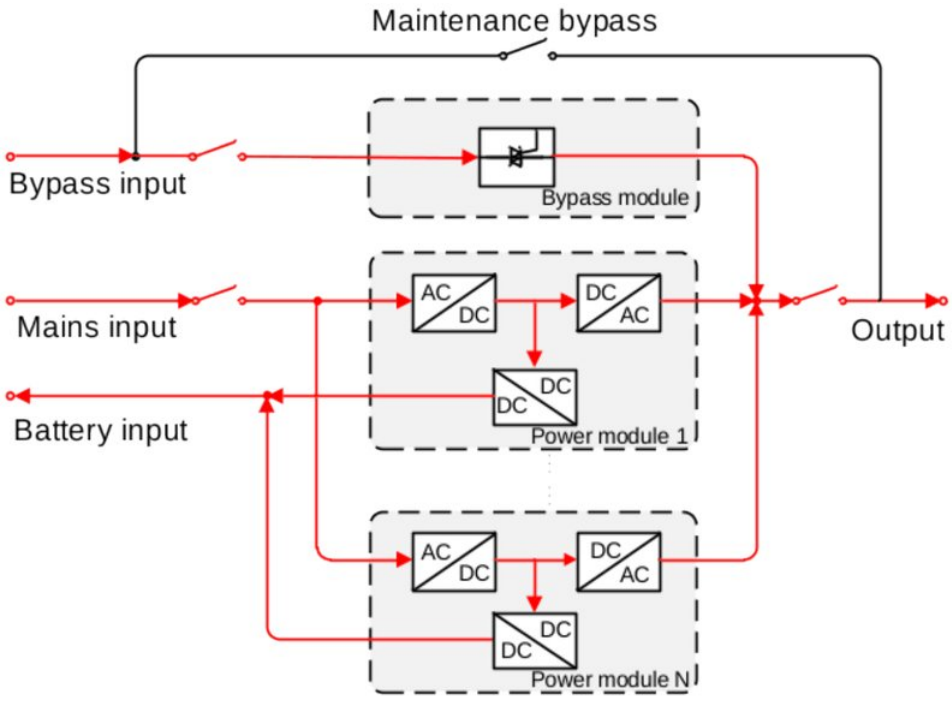

FIGURE 2-31 WECO mode

MAINTENANCE BYPASS MODE

When the UPS needs to be repaired after a fault occurs and the load power supply cannot be interrupted, if the bypass input is normal, the maintenance personnel can turn on the maintenance bypass switch when the mains switch, bypass switch, and output switch are off to switch the UPS to the maintenance bypass power supply state. In this case, the UPS is completely powered off to ensure continuous power supply to the output load. On the other hand, it also ensures the personal safety of maintenance personnel.

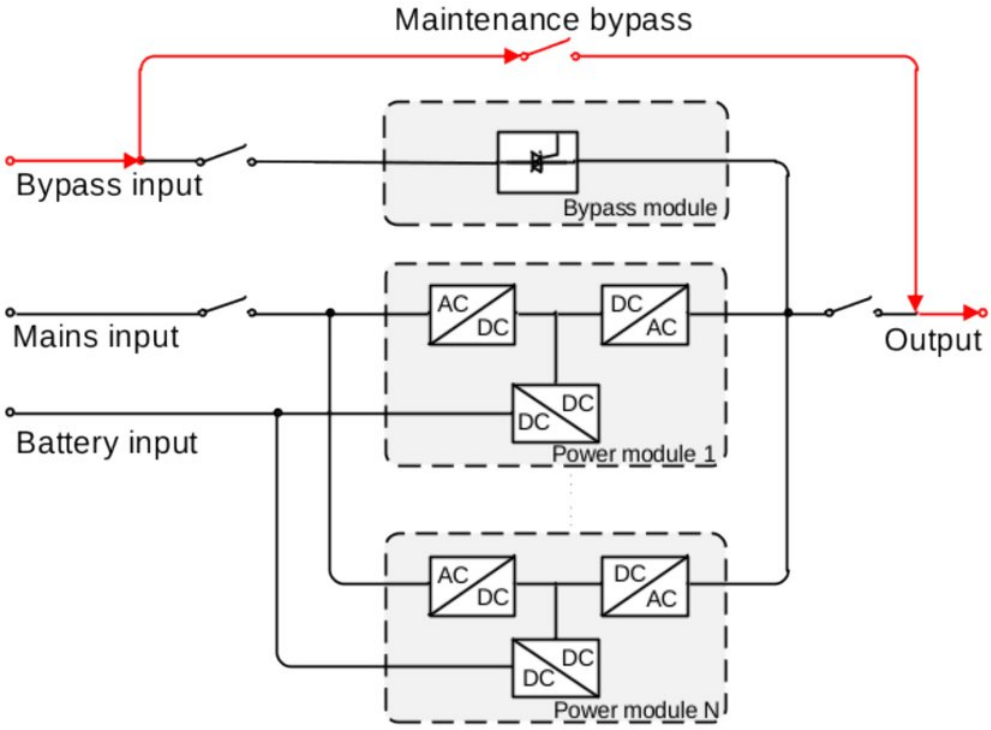

FIGURE 2-32 Maintenance bypass mode

2.6 Optional Components

2.6.1 Optional Components List

No.	Name	Model	No.	Name	Model
1	SNMP card	-	5	Battery temperature compensation kit	-
2	Dry contact expansion card	-	6	Surge protection facility	SPD
3	BMS expansion card	-	7	Battery trip control kit	-
4	Parallel/BSC kit	7 m / 10 m / 15 m	8	Mains and bypass with same power kit	-

2.6.2 SNMP Card

SNMP card is to realize the UPS remote management via network. For the installation of SNMP card, please refer to "**3.6.1 SNMP Card Installation**".

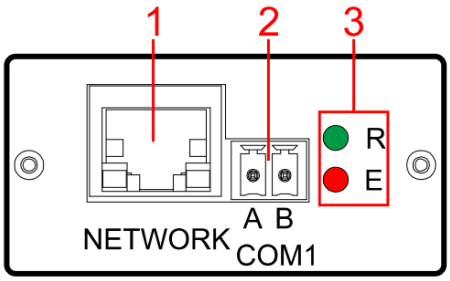

FIGURE 2-33 Appearance

TABLE 2-10 SNMP card description

No.	Marking		Name	Color	Description
1	NETWORK		Ethernet port	-	Used for Ethernet serial communication to realize the remote monitoring communication function. Ethernet port is connected by an RJ45 plug, and its pin definition is shown in Figure 2-34.
2	COM1	A	COM1 port	-	Connect with humiture module (RS485).
		B			

No.	Marking	Name	Color	Description
3	R	Run indicator	Green	• R is on, E is on: System starts. • R flashes, E is in any state: System is running. • R is on/off, E is in any state: System crashes, keep the last state. • R is in any state, E is off: System has no alarm. • R is in any state, R flashes: System has an alarm.
	E		Red	

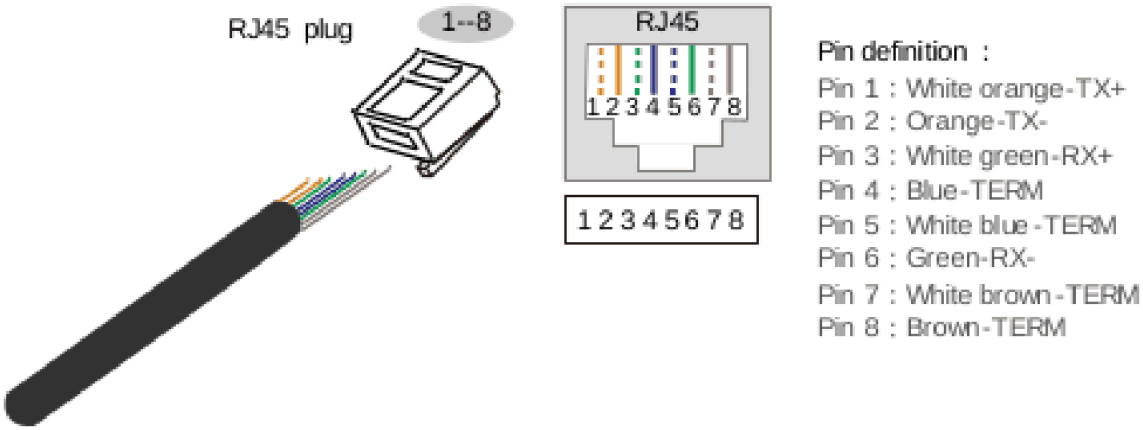

FIGURE 2-34 Pin definition of Ethernet port

SNMP CARD SOFTWARE

NOTE

- It is suitable but not only for the following browsers (The early operating system may not be good in compatibility): Chrome56+ browser, IE11+ browser. The login interface is different in different browser.
- The monitoring software and its user manual are available from AEC technical support (service@aecups.com); have the UPS serial number (S/N) ready.

CAUTION

Please ensure that the setting IP address is in the same network segment with user's computer IP address.

After the SNMP card is installed and connected, configure the software in the following order.

PROCEDURE

1. Open a browser and enter the IP address of the SNMP card (default IP: 192.168.0.100).

NOTE

If the IP address of the SNMP card has been changed, or if several SNMP cards are used, the IP addresses can be found with the network discovery tool supplied by AEC technical support.

2. Enter the user name and password in the login page and click "Login" to enter the monitoring page.

NOTE

Default administrator user name is admin; the default password is given in the AEC SNMP card manual.

2.6.3 Dry Contact Expansion Card

Dry contact expansion card is used to collect detection signals. Dry contact expansion card includes three input dry contact signal ports and two output dry contact signal ports. The definitions of input and output dry contacts are as shown Table 2-8 and Table 2-9. For the installation of dry contact expansion card, please refer to "**3.6.2 Expansion Card Installation**".

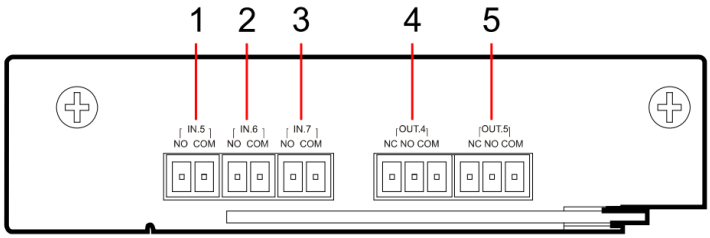

FIGURE 2-35 Appearance

TABLE 2-11 Dry contact expansion card description

No.	Marking		Principle	Name	Description
1	IN.5	NO	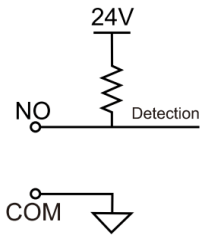	External switch normally open input port	When NO and COM short- circuit, the signal is effective. The signal is settable.
		COM		Common terminal (reinforced insulation from mains)	
2	IN.6	NO		External switch normally open input port	
		COM		Common terminal (reinforced insulation from mains)	
3	IN.7	NO		External switch normally open input port	
		COM		Common terminal (reinforced insulation from mains)	
4	OUT.4	NC	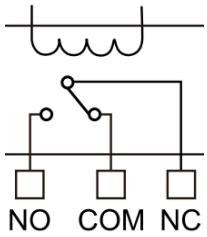	OUT.4 normally closed output port	• The max. voltage and current of the external power are 30VDC/2A. • When the signal is effective, COM short- circuit NO, and disconnect from NC. The signal is settable.
		COM		Common terminal (reinforced insulation from mains)	
		NO		OUT.4 normally open output port	
5	OUT.5	NC		OUT.5 normally closed output port	
		COM		Common terminal (reinforced insulation from mains)	
		NO		OUT.5 normally open	
				output port	

2.6.4 BMS Expansion Card

BMS expansion card is mainly used for Li-battery communication. BMS expansion card includes one BMS port, two input dry contact signal ports, and one output dry contact signal port. For the installation of BMS expansion card, please refer to "**3.6.2 Expansion Card Installation**".

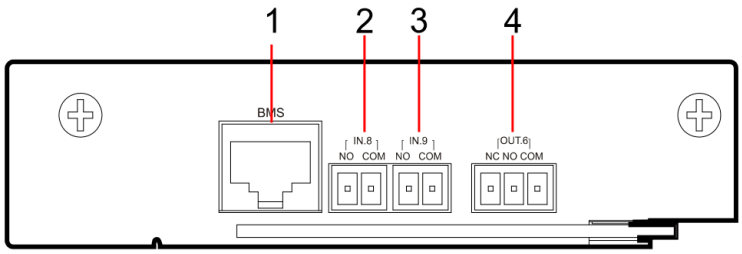

FIGURE 2-36 Appearance

TABLE 2-12 BMS expansion card description

No.	Marking		P	Name	Description
1	BMS -			BMS port	Used to communicate with the Li-battery BMS. BMS port is connected by an RJ45 plug, and its pin definition is shown in Figure 2-37.
2	IN.8	NO COM NO COM	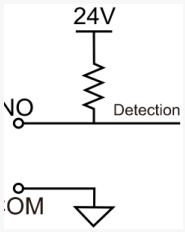	External switch normally open input port	When NO and COM short- circuit, the signal is effective. The signal can be set to prohibit charge.
				Common terminal (reinforced insulation from mains)	
3	IN.9			External switch normally open input port	When NO and COM short- circuit, the signal is effective. The signal can be set to prohibit discharge.
				Common terminal (reinforced insulation from mains)	
4	OUT.6	NC	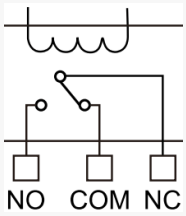	OUT.6 normally closed output port	• The max. voltage and current of the external power are 30VDC/2A. • When the signal is effective, COM short- circuit NO, and disconnect from NC. The signal is reserved.
		NO		OUT.6 normally open output port	
		COM		Common terminal (reinforced insulation from mains)	

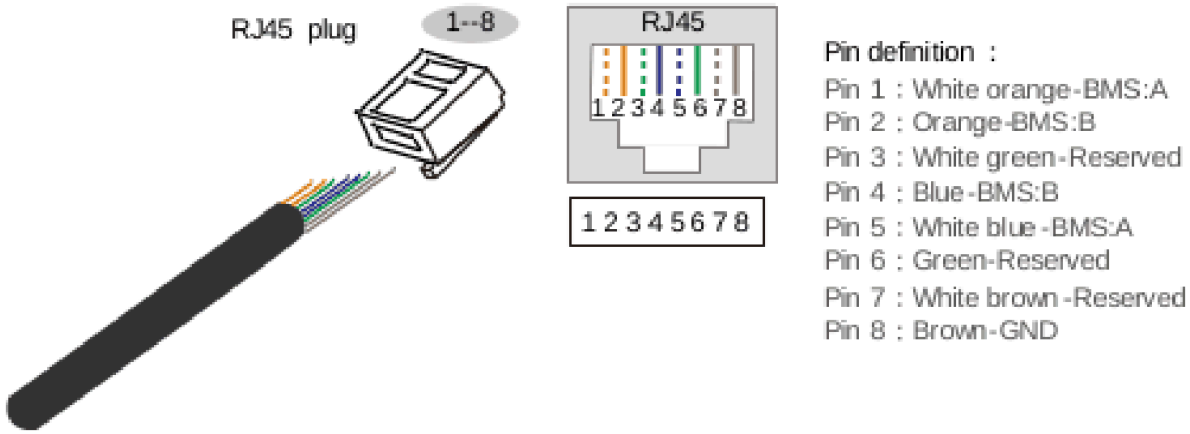

FIGURE 2-37 Pin definition of BMS port

2.6.5 Parallel/BSC Kit

Parallel/BSC kit is used to connect the parallel/BSC signal ports between cabinets in the parallel system. For the installation of parallel/BSC kit, please refer to "**3.6.3 Parallel/BSC Kit Installation**".

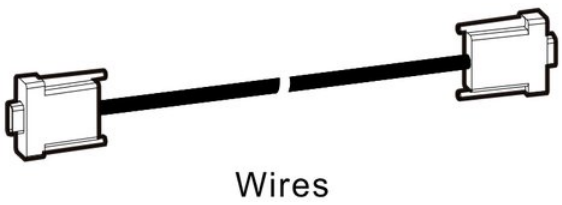

FIGURE 2-38 Appearance

- When multi UPSs are paralleled, connect the parallel port of each UPS by parallel wire. N UPSs require N parallel wires to ensure each UPS at least has two parallel wires, which will improve parallel reliability.

- The synchronous BSC output dual-bus control is used in a dual-bus system to synchronize the output frequency and phase of each system in a dual-bus system to ensure that the two buses can switch to each other.

> **NOTE**
> The UPS is supplied with a 7 m parallel cable. For a longer parallel cable, consult AEC.

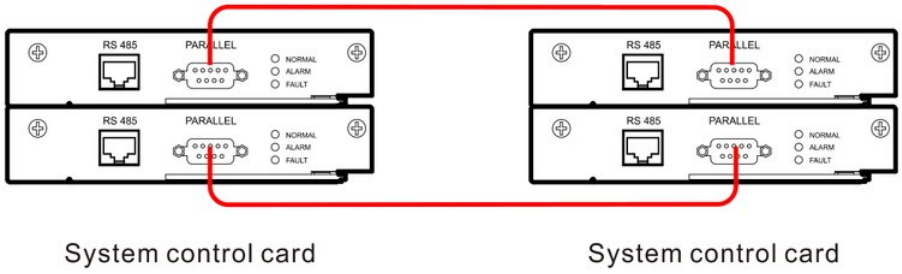

FIGURE 2-39 Parallel port connection (two UPSs)

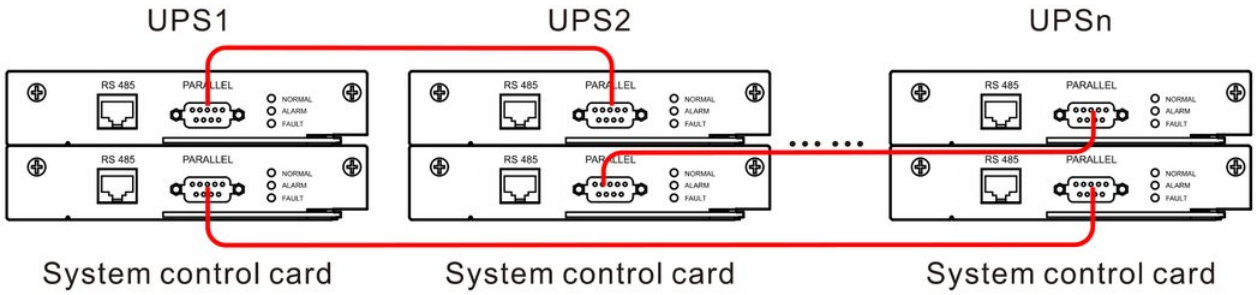

FIGURE 2-40 Parallel port connection (multiple UPSs)

2.6.6 Battery Temperature Compensation Kit

The battery temperature compensation kit is used to compensate the battery temperature. This function is used to monitor the battery temperature and realize the temperature compensation of battery charging and discharging. For the installation of battery temperature compensation kit, please refer to "**3.6.4 Battery Temperature Compensation Kit Installation**".

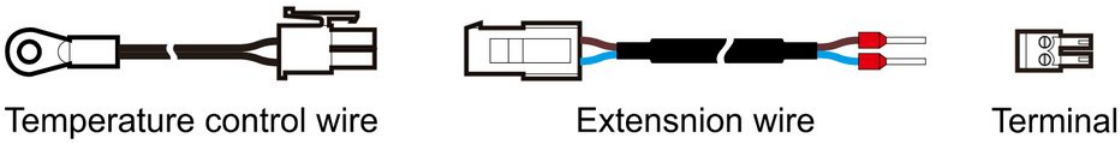

FIGURE 2-41 Appearance

> **NOTE**
> The temperature control wire must be fixed in the area where the battery temperature is high.

2.6.7 Surge Protection Facility

In lightning-prone areas, a multistage surge protection system must be installed at the incoming wire of the mains to ensure the safe operation of the devices. This series UPS can be equipped with a class C SPD and surge protection switch. For the installation of surge protection facility, please refer to "**3.6.5 Surge Protection Facility Installation**".

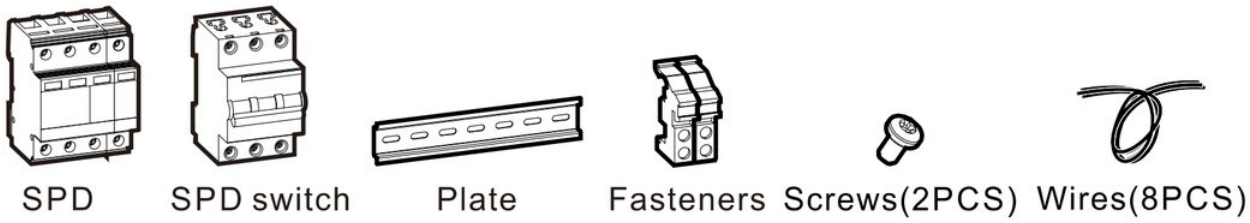

FIGURE 2-42 Appearance

> **NOTE**
> When UPS is equipped with the surge protection facility, install it after the UPS is powered off for power cable safety consideration. Please specify this requirement in the order and install the surge protection facility in factory before delivery.

2.6.8 Battery Trip Control Kit

If a battery release device needs to be installed onsite, a new battery release device kit is required. The output power of this kit is 24VDC and the voltage can be reversed through dry contact control, meeting the requirements of shunt and under-voltage release devices.

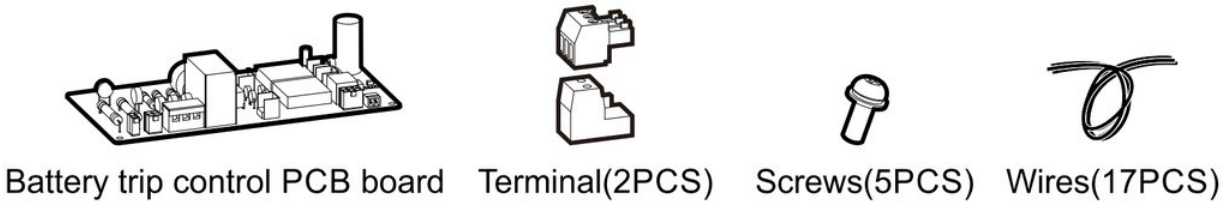

FIGURE 2-43 Appearance

> **NOTE**
> - Battery trip control kit needs to be installed on the battery cabinet. The connection is as below.
> - The out port on the system monitoring card setting is based on the "Setting manage>Dry Contact>Output>Output dry contact" on the touch screen.
> - The output of the battery tripper control kit is 24VDC, so it only meets the rated 24VDC release power supply requirements.
> - If the battery release PCB board has been installed before leaving the factory, only the tripper needs to be connected on site.

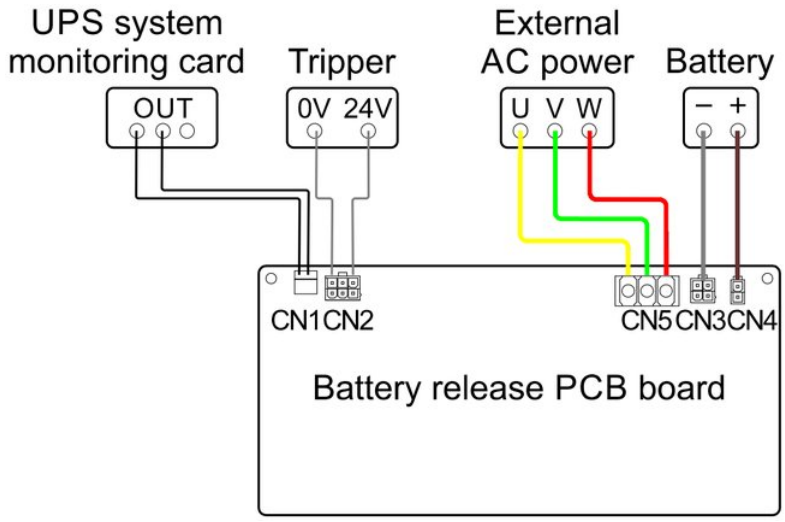

FIGURE 2-44 Battery release connection diagram

2.6.9 Single Power Source Kit

Single power source kit is used to connect the mains input copper bar with bypass copper bar so that the mains input and bypass input of the UPS are supplied by the same power. For the installation of single power source kit, please refer to "**3.6.6 Single Power Source Kit Installation**".



FIGURE 2-45 Appearance (applicable for IST6-200, IST6-300)

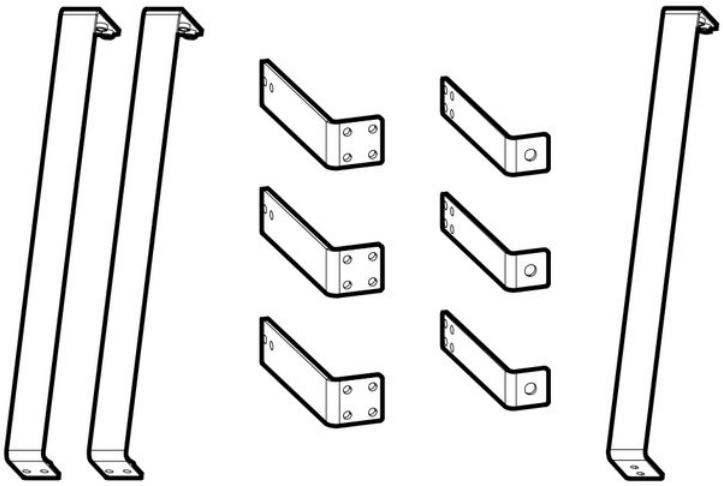

FIGURE 2-46 Appearance (applicable for IST6-400)

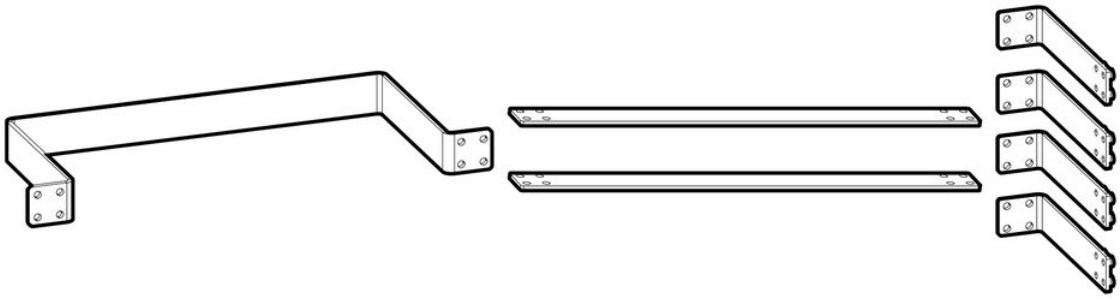

FIGURE 2-47 Appearance (applicable for IST6-500)

2.7 Alarm Protection Function

Once UPS is abnormal, it will send sound & light alarm.

TABLE 2-13 Alarm protection function

Fault	Fault info	Protection requirement	Alarm requirement
Mains fault	Mains fault	power supply red. is not allowed.	• Buzzer beeps slowly. • rectifier indicator on the operation panel turns • " " mains icon on the touch screen turns red. • The yellow ambient lamp is on.
	Mains over-voltage		
	Mains under-voltage		
	Mains unbalance		
	Mains over-frequency		
	Mains under-frequency		
	Mains power down		
	Mains phase loss		
	Mains phase sequence abnormal		
	Large mains harmonic component		
	Mains drop		
	Mains PFC overload protection		
	Mains neutral wire missing		
	Large mains DC component		
Battery fault	Battery fault	Battery power supply is not allowed.	• Buzzer beeps rapidly. • battery indicator on the operation panel turns red. • " " battery icon on the touch screen turns red. • The yellow ambient lamp is on.
	Battery polarity reversed		
	Battery over-voltage		
	Charger overcurrent		
	Battery circuit abnormal		
	Battery under-voltage		
	Battery overload		
Bypass fault	Bypass fault	Bypass output is not allowed.	• Buzzer beeps slowly. • bypass indicator on the operation panel turns
	Bypass over-voltage		
	Bypass under-voltage		

TABLE 2-13 Alarm protection function *(continued)*

Fault	Fault info	Protection requirement	Alarm requirement
			red. • " " bypass icon on the touch screen turns red. • The yellow ambient lamp is on.
	Bypass unbalance		
	Bypass over-frequency		
	Bypass under-frequency		
	Bypass power down		
	Bypass phase loss		
	Bypass phase sequence abnormal		
	Large bypass harmonic		
	ECO power down detection	ECO output is not allowed.	• Buzzer beeps slowly. • The yellow ambient lamp is on.
	ECO over-voltage		
	ECO under-voltage		
	ECO over-frequency		
	ECO under-frequency		
Output fault	Inverter output fault	Output beeping. output is red. not allowed.	• Buzzer keeps • inverter indicator on the operation panel turns • " " output icon on the touch screen turns red. • The red ambient lamp is on.
	short circuit		
	Inverter over-voltage		
	Inverter under-voltage		
	Inverter over-frequency		
	Inverter under-frequency		
	Low output PF value		
	Large output current DC component		
	Output circuit abnormal	None	• Buzzer beeps slowly. • inverter indicator on the operation panel turns red. • " " output icon on the touch screen turns red.
			• The red ambient lamp is on.

TABLE 2-13 Alarm protection function *(continued)*

Fault	Fault info	Protection requirement	Alarm requirement
System fault	System fault	None	• Buzzer keeps beeping. • The red ambient lamp is on.
	System EPO on	Bypass output and inverter output are not allowed.	
	System bypass fault	None	
	System inverter fault	None	
	EPO on	Bypass output and inverter output are not allowed.	
	Bypass SCR abnormal	output is not red. allowed.	• Buzzer keeps beeping. •  bypass indicator on the operation panel turns • " " bypass icon on the touch screen turns red. • The red ambient lamp is on.
	Bypass overload protection	Bypass output and inverter output are not allowed.	• Buzzer keeps beeping. •  load indicator on the operation panel turns red. • " " output icon on the touch screen turns red. • The red ambient lamp is on.
	Inverter overload protection	Inverter output is not allowed.	
	Parallel wire abnormal	Inverter output is not allowed.	• Buzzer keeps beeping. • The red ambient lamp is on.
	Parallel system sovereignty fault	None	
	Maintenance bypass open	Inverter output is	
		not allowed.	
	System battery prohibit charge on	None	• Buzzer beeps rapidly. •  battery indicator on the operation panel turns red. • " " battery icon on the touch screen turns red. • The red ambient lamp is on.
	System battery prohibit discharge on	None	

TABLE 2-13 Alarm protection function *(continued)*

Fault	Fault info	Protection requirement	Alarm requirement
Cabinet fault	Cabinet fault	None	• Buzzer keeps beeping. • The red ambient lamp is on.
	Bypass overtemperature	Judge whether to bypass output on the red. bypass overtemperature setting	• Buzzer keeps beeping. • bypass indicator on the operation panel turns • " " bypass icon on the touch screen turns red. • The red ambient lamp is on.
	Inverter output overcurrent	None	• Buzzer keeps beeping. • The red ambient lamp is on.
	Rectifier fault self-lock	None	
	Inverter fault self-lock	None	
	Battery overload protection	None	
	Battery discharge protection timeout	None	
	UPS fault	None	
Cabinet prealarm	Cabinet prealarm	None	• Buzzer beeps rapidly. • The yellow ambient lamp is on.
	Cabinet overtemperature alarm	None	
	Battery high-temperature	None	
	alarm		
	Battery low-temperature alarm	None	
	Battery under-voltage alarm	None	
	Backup time insufficient	None	
	Output overload alarm	None	• Buzzer beeps rapidly. • load indicator on the operation panel turns red. • " " output icon on the touch screen turns red. • The yellow ambient lamp is on.
	Output frequency beyond range	None	• Buzzer beeps rapidly. • The yellow ambient lamp is on.
	Bypass auxiliary power abnormal	None	
	Bypass overtemperature alarm	None	
	Some power module PFC abnormal	None	
	Battery auto-start when power on disabled	None	

TABLE 2-13 Alarm protection function *(continued)*

Fault	Fault info	Protection requirement	Alarm requirement
Cabinet alarm	Cabinet fault	None	• Buzzer beeps slowly. • The yellow ambient lamp is on.
	Battery disconnected	None	
	Auxiliary power abnormal	None	
	Bypass not installed	Bypass output is not allowed.	• Buzzer beeps slowly. • bypass indicator on the operation panel turns red. • " " bypass icon on the
			touch screen turns red. • The yellow ambient lamp is on.
	Parameter setting mismatch	None	• Buzzer beeps slowly. • The yellow ambient lamp is on.
	Battery parameter mismatch	None	
	Module number inconsistent	None	
	Cabinet number inconsistent	None	
	System card n_not installed	None	
	System card n_Flash abnormal	None	
	System card n_card slot address repeat	None	
	System card n_ON/OFF state and primary card out of sync	None	
	Bypass output now	None	
	System card n_primary card and secondary card parameter out of sync	None	
	System card n_output state out of sync	None	
	Fan dedusting	None	
Power-on failure alarm	Power-on failure alarm	Static startup is not allowed to work.	• Buzzer beeps slowly. • The yellow ambient lamp is on.
	Reserved		
	Inverter output not possible: load too heavy		

TABLE 2-13 Alarm protection function *(continued)*

Fault	Fault info	Protection requirement	Alarm requirement
	Waiting common inverter for unknown load		
	PFC software version inconsistent		
	Inverter software version inconsistent		
	CCM software version inconsistent		
	Module hardware version inconsistent		
	Key parameter mismatch		
	Parallel address conflict		
	Module serial version inconsistent		
Component failure alarm	Component failure	None	• Buzzer beeps slowly. The yellow ambient lamp is on.
	Bypass 1 NTC failure		
	Bypass 2 NTC failure		
	Cabinet NTC failure		
	System card NTC failure		
	Bypass fan abnormal		
	fan abnormal		
	Parallel wire 1 alarm		
	Parallel wire 2 alarm		
	Bypass 1 not installed		
	Bypass 2 not installed		
	Monitoring card not installed		
	Bypass module offline	Bypass output is not allowed.	• Buzzer beeps slowly. • bypass indicator on
			the operation panel turns red. • " " bypass icon on the touch screen turns red.
	Expansion card offline	None	• Buzzer beeps slowly. • The yellow ambient lamp is on.
	Bypass NTC failure		

TABLE 2-13 Alarm protection function *(continued)*

Fault	Fault info	Protection requirement	Alarm requirement
Communication abnormal alarm	Communication abnormal	None	• Buzzer beeps rapidly. • The yellow ambient lamp is on.
	Sync CAN inside cabinet abnormal		
	Equalized current CAN inside cabinet abnormal		
	BMS communication fault		
	Display CAN inside cabinet abnormal		
	Sync CAN among cabinets abnormal		
	Equalized current CAN among cabinets abnormal		
	Inner SCI communication abnormal		
Smart mode alarm	Smart mode alarm	None	• Buzzer beeps slowly. • The yellow ambient lamp is on.
	Generator mode on		
	Generator prohibit charge		
	Only a BSC system detected now		
	System current load exceeds the set safety load		
	Power module without redundancy		
	Power module redundancy insufficient		
	Cabinet without redundancy		
	Cabinet redundancy insufficient		
	System card without redundancy		
	Self-load switch abnormal		
	Self-load timeout alarm		
	Inverter and bypass out of sync		

TABLE 2-13 Alarm protection function *(continued)*

Fault	Fault info	Protection requirement	Alarm requirement
Input dry contact state	Input dry contact alarm	None	• Buzzer beeps slowly. • The yellow ambient lamp is on.
	Battery abnormal		• Buzzer beeps rapidly. • battery indicator on the operation panel turns red. • " " battery icon on the touch screen turns red. • The yellow ambient lamp is on.
	Battery grounding abnormal		
	Battery switch off		
	Bypass switch off		• Buzzer beeps slowly. • bypass indicator on the operation panel turns red. • " " bypass icon on the touch screen turns red. • The yellow ambient lamp is on.
	Output switch off		• Buzzer beeps slowly. • The yellow ambient lamp is on.
	Battery prohibit discharge		• Buzzer beeps rapidly. • battery indicator on the operation panel turns red. • " " battery icon on the touch screen turns red. • The yellow ambient lamp is on.
	on Battery prohibit charge on		
	Generator mode on		• Buzzer beeps slowly. • The yellow ambient lamp is on.
	SPD abnormal		
	Maintenance bypass closed		
	Mains abnormal		

TABLE 2-13 Alarm protection function *(continued)*

Fault	Fault info	Protection requirement	Alarm requirement
Offline alarm state	Power module 1 - offline	None	• Buzzer beeps slowly. • The yellow ambient lamp is on.
	Power module 2 - offline		
	Power module 3 - offline		
	Power module 4 - offline		
	Power module 5 - offline		
	Power module 6 - offline		
	Power module 7 - offline		
	Power module 8 - offline		
	Power module 9 - offline		
	Power module 10 - offline		
	Power module 11 - offline		
	Power module 12 - offline		
	Power module 13 - offline		
	Power module 14 - offline		
	Power module 15 - offline		
	Power module 16 - offline		
	Power module 17 - offline		
	Power module 18 - offline		
	Power module 19 - offline		
	Power module 20 - offline		
	Power module 21 - offline		
	Power module 22 - offline		
	Power module 23 - offline		
	Power module 24 - offline		
	Power module 25 - offline		
	Power module 26 - offline		
	Power module 27 - offline		
	Power module 28 - offline		
	Power module 29 - offline		
	Power module 30 - offline		
	System card 1 - offline		
	System card 2 - offline		

⚠ CAUTION

After the battery under-voltage protection is taken, UPS will restart and recharge battery pack when the mains restores to normal supply.

03 Installation

CHAPTER 3

IN THIS CHAPTER

3.1 Installation Process
3.2 Unpacking and Checking
3.3 Installation Preparation
3.4 Transportation
3.5 UPS Installation
3.6 Optional Components Installation
3.7 Electrical Connection
3.8 Verifying the Installation

ROADMAP **From delivery to operation**

1. **Read the safety instructions** — Section 1.2
2. **Unpack and check the delivery** — Section 3.2
3. **Choose the place and prepare the cables and breakers** — Section 3.3
4. **Install and connect** — Section 3.7
5. **Start** — Section 4.1.2
6. **Check the display and the settings** — Section 5.7
7. **Look after** — Section 6.1

3.1 Installation Process

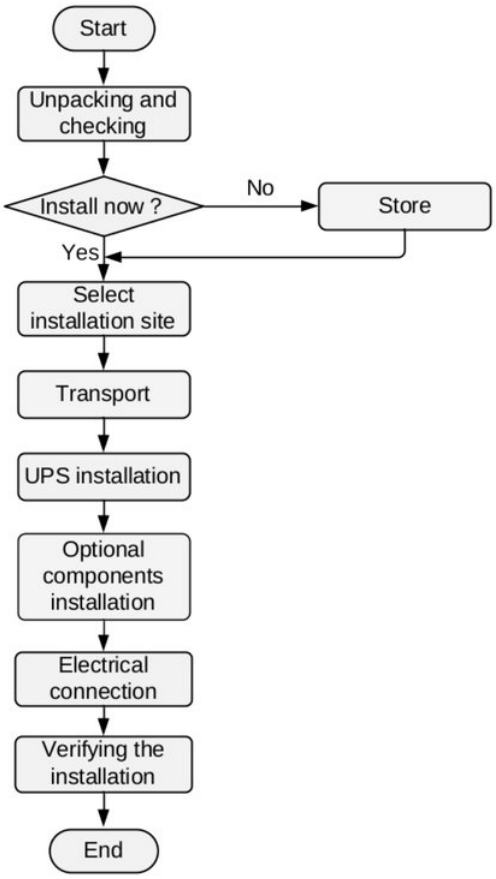

FIGURE 3-1 Installation process

3.2 Unpacking and Checking

> **NOTE**
>
> Due to the large volume of the packing box, it is necessary to choose the unpacking location in advance. The unpacking site is better to close the installation site.

3.2.1 Check the outer packing

The device has been fully tested and inspected before delivery, but damage may still occur during transportation. Please check the outer package for visible damage, such as holes, cracks or other signs that may cause internal damage, and check the device model before unpacking. If there is any abnormal packaging or device model discrepancy, do not unpack it and contact your dealer as soon as possible.

> **NOTE**
>
> - Device model and gravity center marking can be identified on the packing box.
> - When using a forklift truck to transport device, the forklift arm should align with the "Forklift arm position" icon on the packing box.

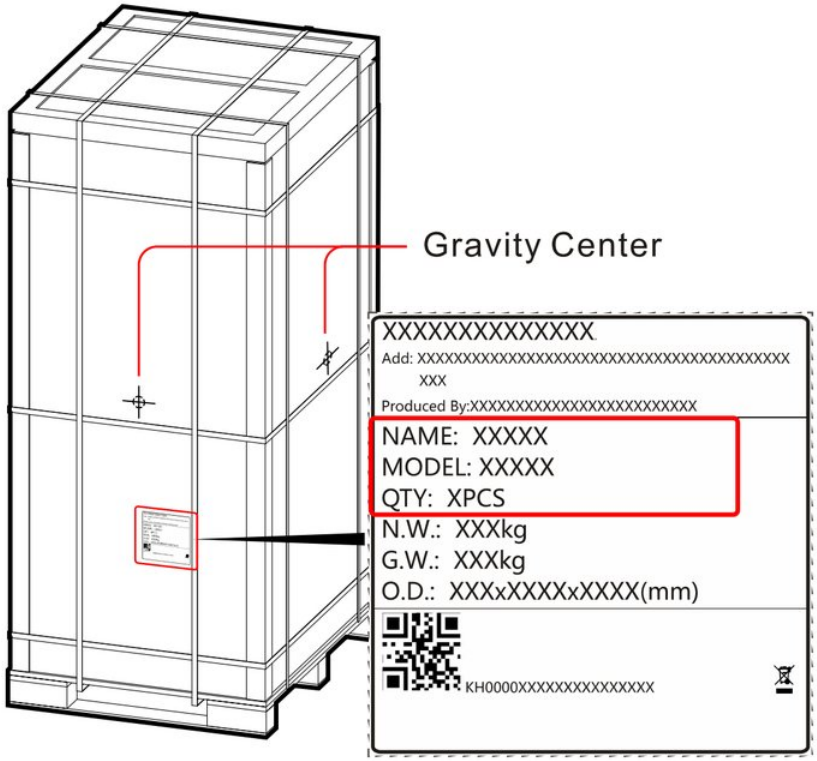
Gravity Center
XXXXXXXXXXXXXX
Add: XXXXXXXXXXXXX

3.3 Installation Preparation

3.3.1 Installation Tool

Operators can add or subtract tools according to the specific construction situation.

Protective tool			
			
Safety helmet	Goggles	Protective shoes	Reflective vest
	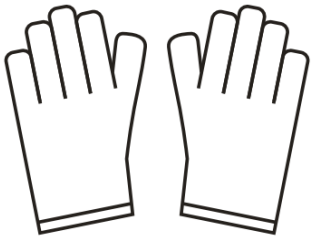	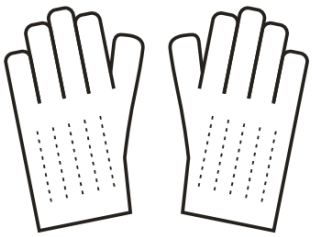	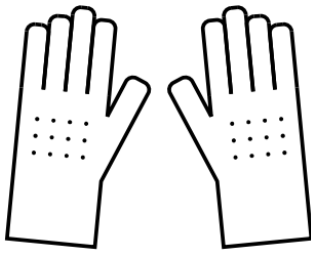
Dust mask	Protective gloves	ESD gloves	Insulation gloves
	-	-	-
Safety belt	-	-	-
Transportation			
			-
Lift truck	Manual forklift truck	Forklift truck	-
Device installation tool			
			

Protective tool			
Flathead screwdriver	Phillips screwdriver	Torque socket wrench (including an extension socket)	Adjustable wrench
	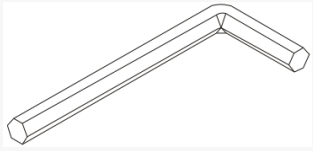	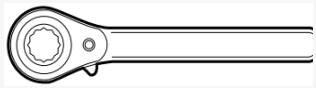	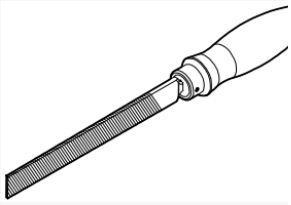
Torque wrench	Allen Wrench	Ratchet	File
	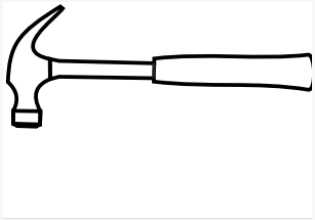	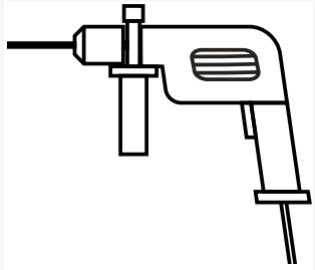	
Rubber hammer	Claw hammer	Hammer drill	Marker
	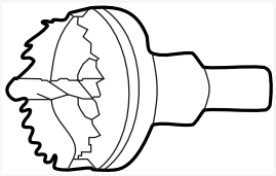	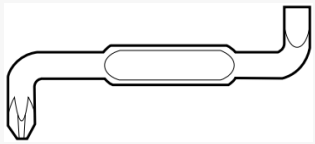	
Torque screwdriver	Hole opener	Elbow screwdriver	Telegraph herring
	-	-	-
Man ladder	-	-	-
Wire installation tool			
	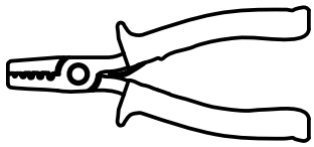		
Disgonal pilers	Wire stripper	Crimping pilers	Hydraulic pliers

Protective tool			
	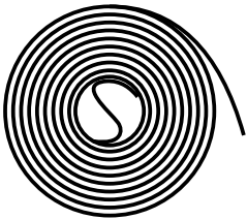	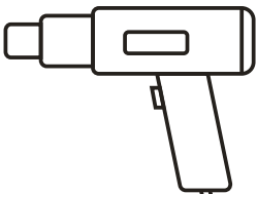	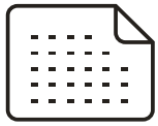
Electrician's knife	Heat shrink tubing	Heat gun	Label paper
			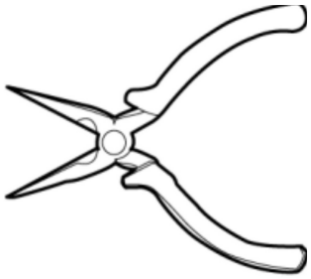
Cable tie	Wire cutting pliers	RJ45 crimping pliers	Sharp nose pliers
Pilers	Wire cutting pliers	Pipe Clamps	Hydraulic pliers
		-	-
Open wrench	Crimping pilers	-	-
Measuring tool			
Level straight ruler	Steel ruler	Angle ruler	Long tape measure
			
Measuring tape	Long roll steel rule	Height meter	Laser locator
Thermometer	Level	Phase sequence meter	Voltage resistance meter
	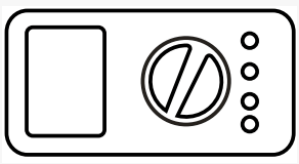	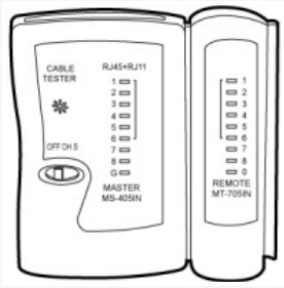	

Protective tool			
Clamp ammeter	Multimeter	Network cable tester	Electric pen
Cleaning tool			
	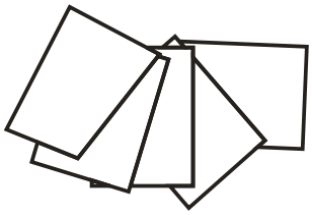	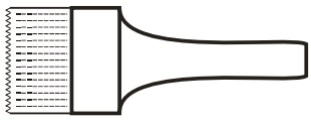	-
Vacuum cleaner	Cotton	Brush	-
Other tools			
		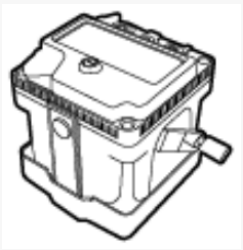	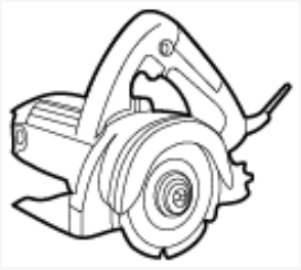
Cable coil	Sealant, sealant gun	Insulation shake meter	Small cutter
			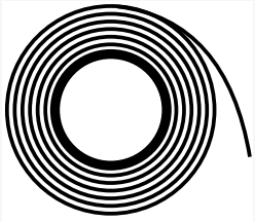
Paint brush	Flashlight	Sandpaper	Insulation tape

⚠ CAUTION

Installation tools need to be insulated to avoid electric shock.

3.3.2 Select Installation Site

INSTALLATION ENVIRONMENT REQUIREMENTS

The protection grade of UPS is IP20, which is installed in indoor. The installation environment requirements are as follows:

- Ambient temperature: 0 °C~ 40 °C.

> **NOTE**
> The optimum operating temperature for batteries is 20°C to 30°C. Operating in an environment where the temperature is higher than 30°C reduces the battery service life. Operating in an environment where the temperature is lower than 20°C will shorten the battery backup time.

- Relative humidity: 0%RH to 95%RH, non-condensing.
- Altitude: Not more than 2000m, if the altitude is more than 2000m, it must be derated according to IEC 62040-3 standard, up to 4000m.
- Verticality: No vibration. The vertical inclination does not exceed 5º.
- Good ventilation around the device.
- Do not place the device near water sources, heat sources, or inflammable and explosive materials.
- Do not install the device in an environment with direct sunlight, dust, smoke, volatile gases, corrosive substances, infrared, ultraviolet and other radiation, organic solvents, or high salt content.
- Do not install the device in a working environment with metal conductive dust.
- Do not install the device in areas with strong vibrations, strong noise sources, and strong electromagnetic fields.
- The installation ground is solid, there is no bad geology such as rubber soil, soft soil or easy subsidence. It is strictly prohibited to choose low-lying areas such as easy water and snow. The water level of the site should be higher than the highest water level in the history of area.
- Add a rodent-proof baffle at the door of the device room to prevent rodents and insects from entering.
- Power supply requirements:
  - Grounding preparation. The ground terminal is ready, and the neutral-to-grounding voltage does not exceed 5V.
  - Before installing UPS, ensure that the AC input voltage and mains wires meet the UPS requirements and consider whether the current carrying capacity deteriorates due to the wire aging.
  - The mains input voltage range of UPS is 80~280VAC. The mains capacity should be greater than the max. input power of UPS.
  - Breakers shall not be selected with leakage current protection type.



FIGURE 3-3 Installation environment requirements

INSTALLATION SPACE REQUIREMENTS

Reserve enough space around UPS for operation and ventilation.

- When the UPS is combined, the space reserved around the combined devices must meet the installation space requirements shown in Figure 3-4.
- When it is necessary to operate behind UPS, reserve at least 800mm space.
- When the ambient temperature of UPS is high, increase the space behind UPS, and it is recommended to reserve more than 800mm space.

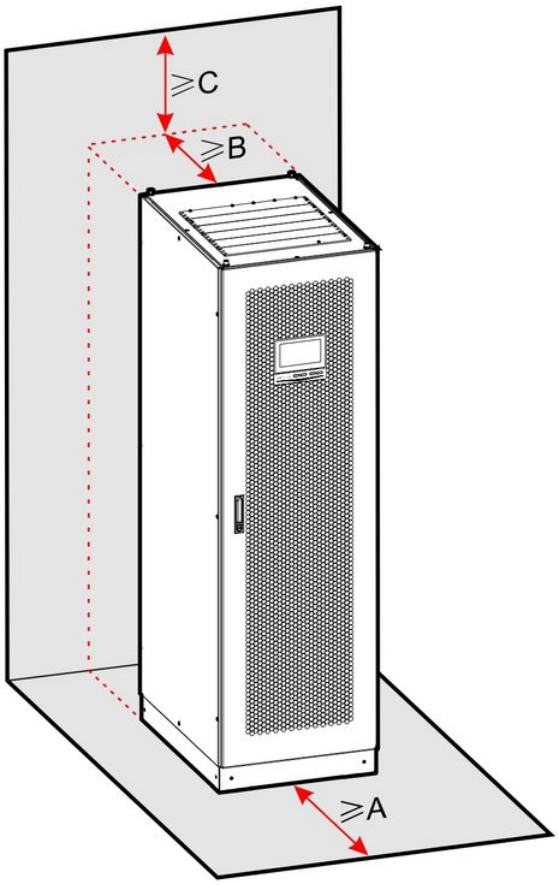

FIGURE 3-4 Installation space diagram

TABLE 3-1 Installation space requirement

Model	A (mm)	B (mm)	C (mm)
The IST6 200–500 kVA UPS	≥800	≥500	≥500

⚠ CAUTION

Do not cover the ventilation holes of UPS, so as not to affect the heat dissipation of UPS, resulting in an increase in the internal temperature of UPS and affect the UPS service life.

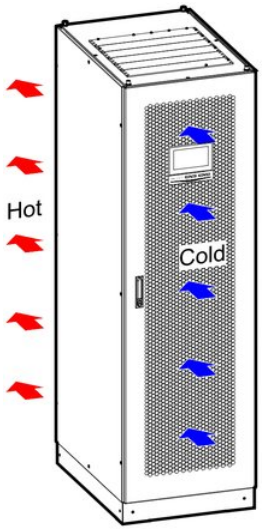

FIGURE 3-5 Heat dissipation diagram

TABLE 3-2 Air flow description

Model	IST6-200	IST6-300	IST6-400	IST6-500
Min. air flow (m3/h)	2420	3630	4840	6050

3.4 Transportation

When moving devices, you can select an electric or manual forklift truck based on site conditions. If a forklift cannot be used on site, contact a professional to provide a reasonable transportation method.

CAUTION

- The device must be transported by trained professionals. Select an appropriate elevator based on the device weight, and arrange enough personnel to carry it. Transport personnel need to wear anti-smash shoes, gloves and other protective equipment. If the device weight exceeds the bearing capacity of the elevator, contact a professional to provide a reasonable transportation method.
- When forklifting the device, the gravity center of the device should be in the center of the two forks, keep the transportation process slow and smooth, and keep the balance between left and right. Before moving, please fasten the device to the forklift with a rope; When moving, it needs to be guarded by someone.
- During transportation, pay attention to the gravity center of the device to avoid impact or device falling.
- During transportation, keep the device vertical, with the device tilting angle α≤15°. Do not put down or lift it suddenly.

NOTE

Insert the forklift from the short side of the device or use two forklifts to insert from the front of the device.

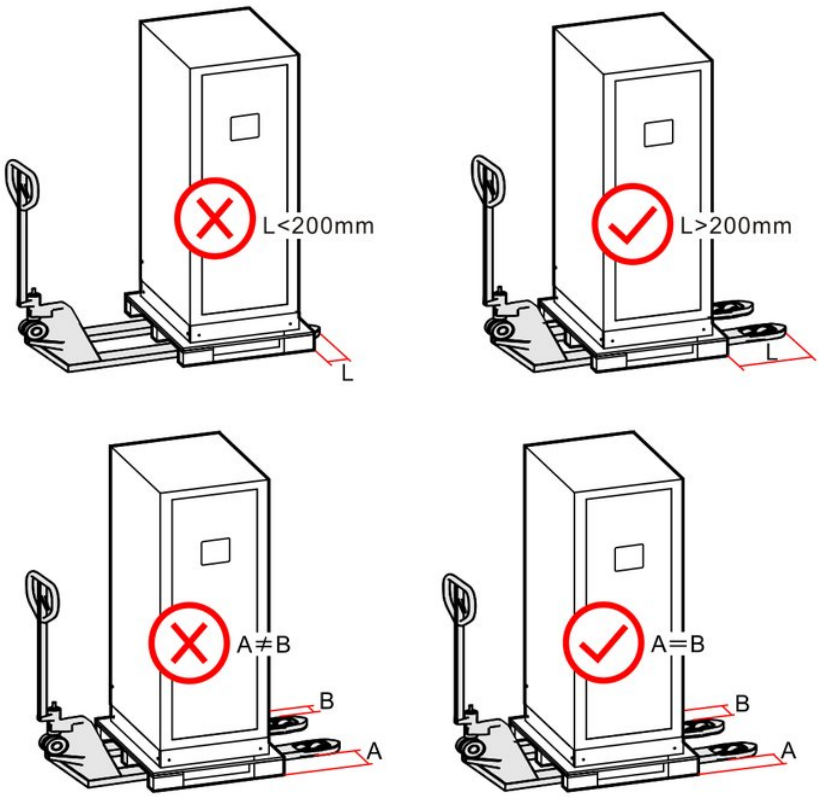

FIGURE 3-6 Forklift truck transportation diagram

3.5 UPS Installation

3.5.1 Ground Installation

TABLE 3-3 Material source

No.	Material	Source
1	M12 expansion bolts	Prepared by customer
2	Anchor baffles	Delivered with UPS
3	M6 screws	Delivered with UPS

CAUTION

If the bottom wiring is used, dig the wiring groove at the installation position in advance.

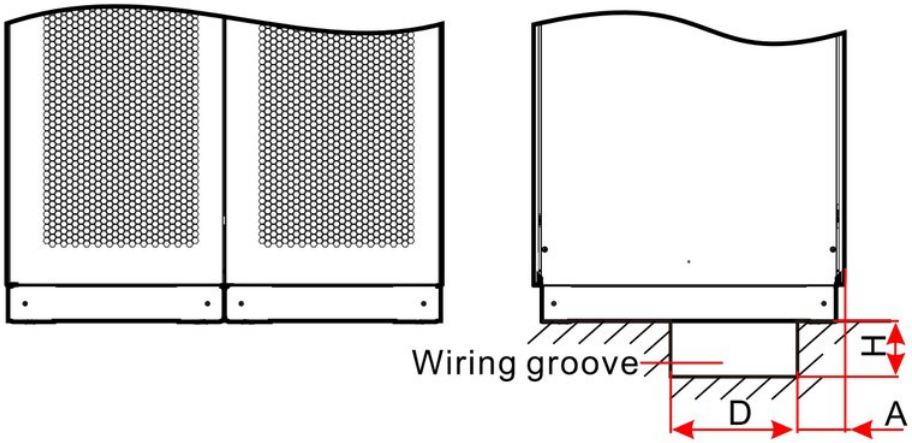

FIGURE 3-7 Wiring groove diagram

TABLE 3-4 Recommended wiring groove size

Model	A (mm)	D (mm)	H (mm)
IST6-200, IST6-300, IST6-400, IST6-500	240	500	300

PROCEDURE

1. Select and plan an installation site based on the UPS size and installation space requirements.

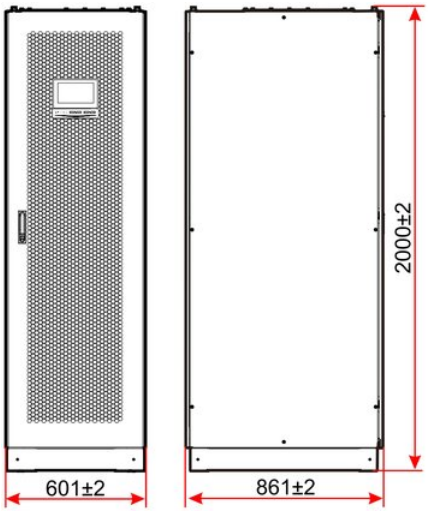

FIGURE 3-8 Size of IST6-200, IST6-300 (unit: mm)

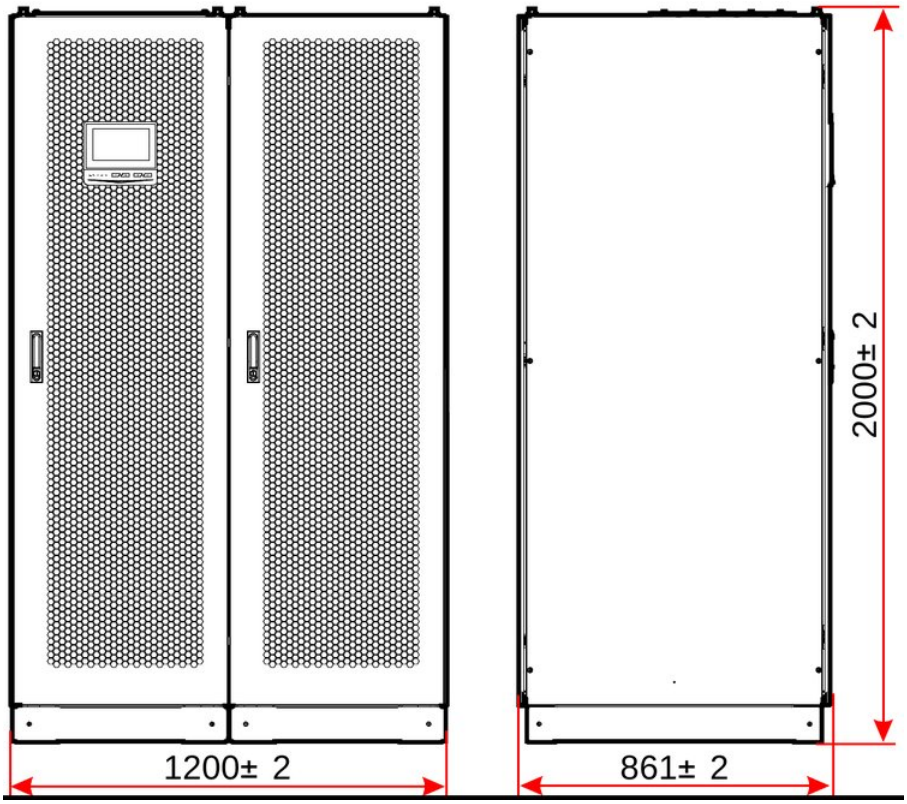

FIGURE 3-9 Size of IST6-400, IST6-500 (unit: mm)

PROCEDURE

1 Mark the positions of mounting holes on the ground.

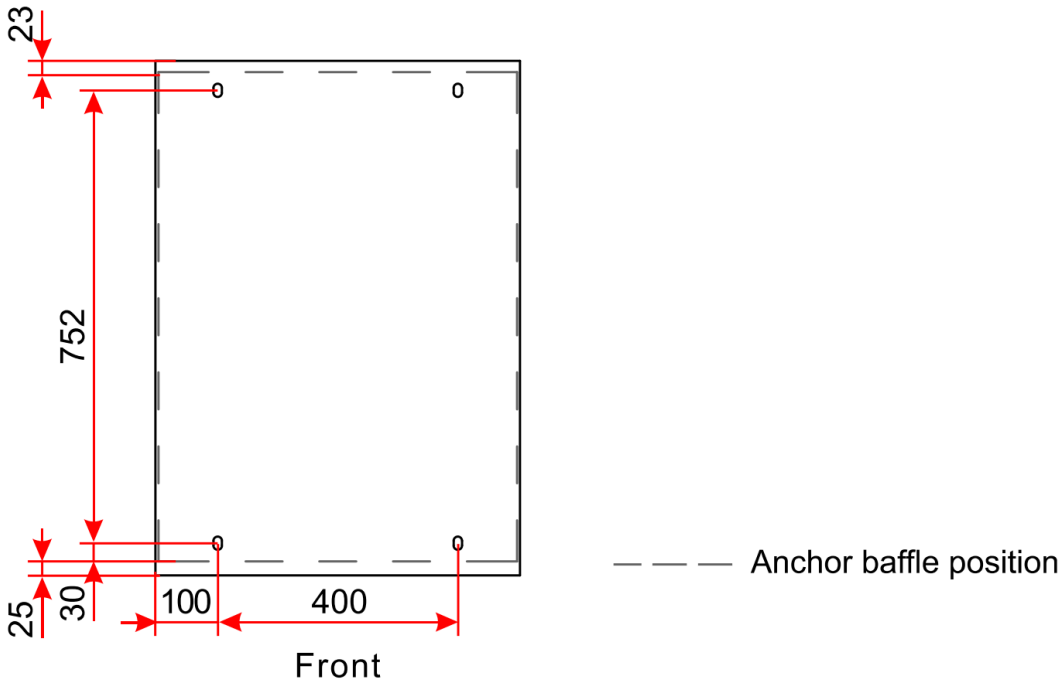

FIGURE 3-10 The positions of mounting holes of IST6-200, IST6-300 (unit: mm)

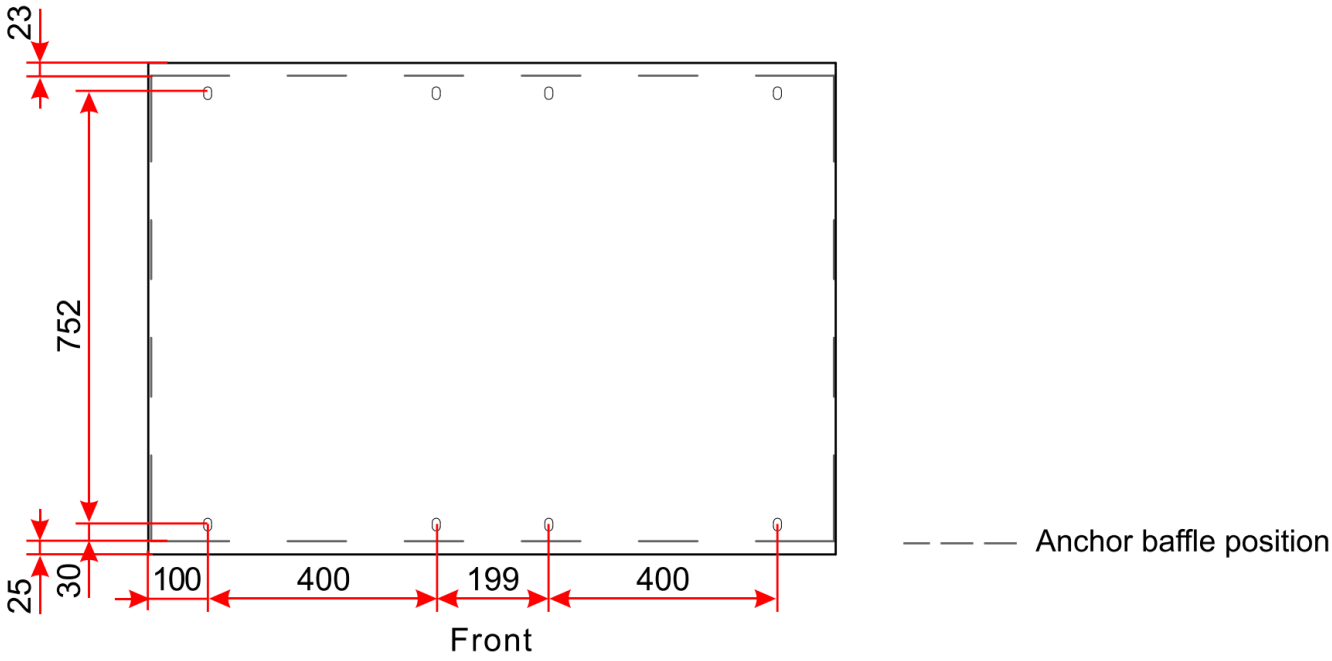

FIGURE 3-11 The positions of mounting holes of IST6-400, IST6-500 (unit: mm)

2 Install the expansion tubes of the M12 expansion bolts.

1. Drillφ14mm hole on the ground by hammer drill.
2. Tighten the expansion bolt slightly and place it vertically in the hole. Tap the expansion bolt with a rubber hammer until the expansion pipe is fully inserted into the hole.
3. Tighten the expansion bolt.
4. Unscrew nut and remove flat washer and spring washer.

⚠ CAUTION

The depth of the expansion bolt should be as deep as the expansion pipe is in the hole. The expansion pipe must not be higher than the ground. Otherwise, UPS installation may be affected.

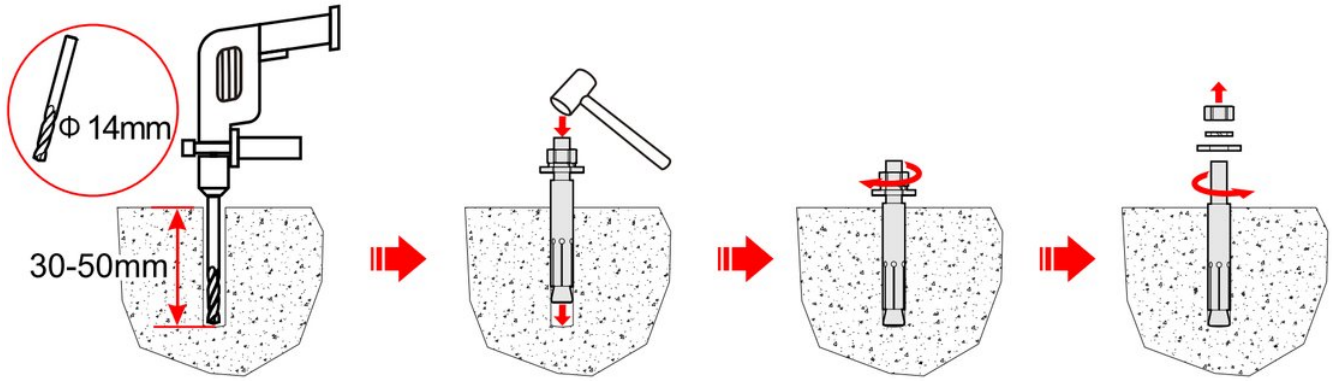

FIGURE 3-12 Install the expansion tubes

3 Unscrew the nuts connecting UPS and the wooden tray, remove the nuts, screws, spring washers and flat washers.

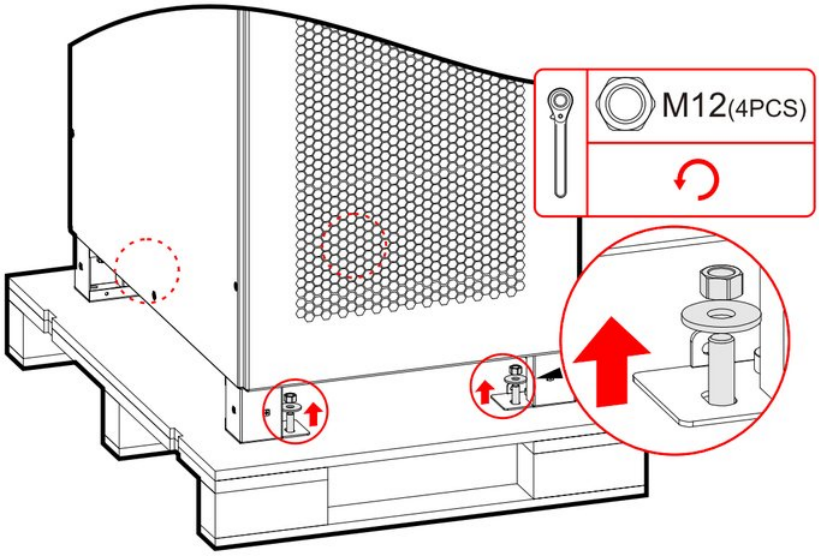

FIGURE 3-13 Remove the bolts connecting UPS and the wooden tray

4 Use a forklift to move UPS from the wooden tray to the ground where the expansion bolts are fastened. Place flat washers, spring washers, and nuts on UPS to lock bolts.

> **NOTE**
> If the bottom wiring is used, ensure that UPS is installed above the wiring groove.

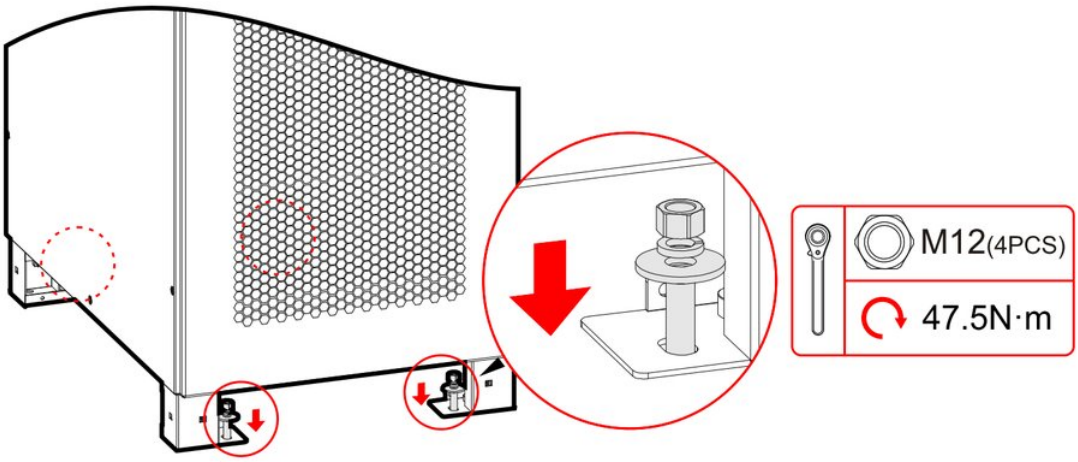

FIGURE 3-14 Fix UPS

5 Install the anchor baffles of UPS.

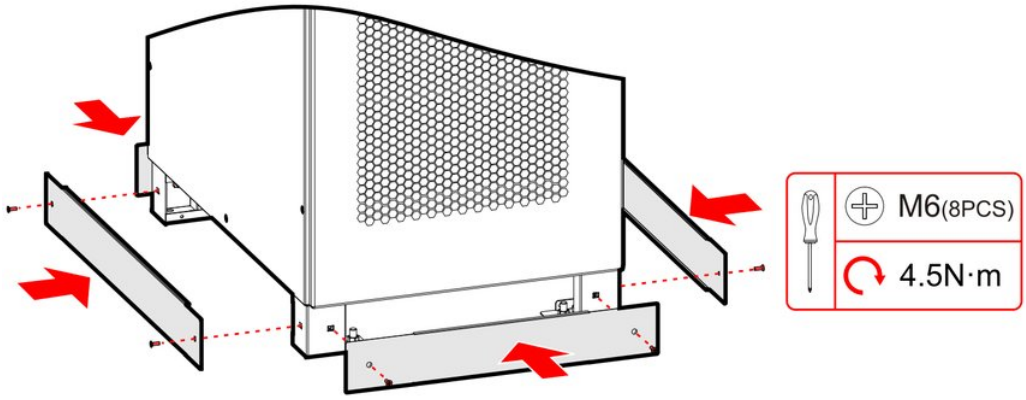

FIGURE 3-15 Install the anchor baffles

3.5.2 Channel Steel Installation

PROCEDURE

1. Select and plan an installation site based on the UPS size and installation space requirements.
2. Mark the positions of mounting holes on the channel steel.
3. Drillφ14mm hole on the channel steel by hammer drill.
4. Unscrew the nuts connecting UPS and the wooden tray, remove the nuts, screws, spring washers and flat washers.
5. Use a forklift to move UPS from the wooden tray to the installation holes of the channel steel.
6. Fix UPS to the channel steel.

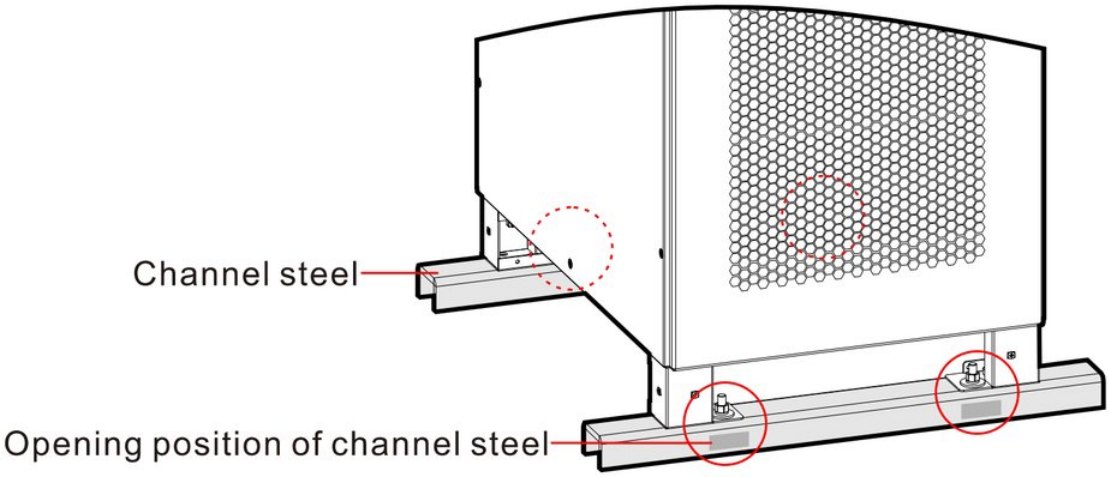

FIGURE 3-16 The opening position of the channel steels

> **NOTE**
>
> - Figure 3-16 shows the opening position of the C-shaped channel steels with the opening facing down, one cabinet, and non-wall mounting.
> - The channel steel model, installation method, whether side holes are required, hole sizes and actual cabinet number are based on the site survey data.

7. Install the anchor baffles of UPS.

3.6 Optional Components Installation

> **NOTE**
>
> Components removed from the device, such as screws, plates, etc., need to be stored properly for further use.

3.6.1 SNMP Card Installation

PROCEDURE

1. Dismantle the SNMP card plate on the system control box.

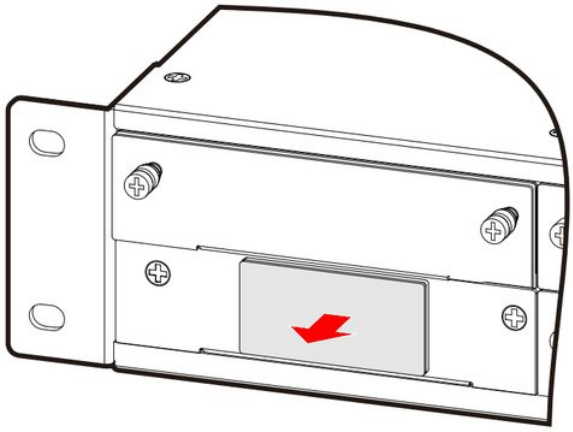

FIGURE 3-17 Dismantle the SNMP card plate

2 Install the SNMP card on the system control box.

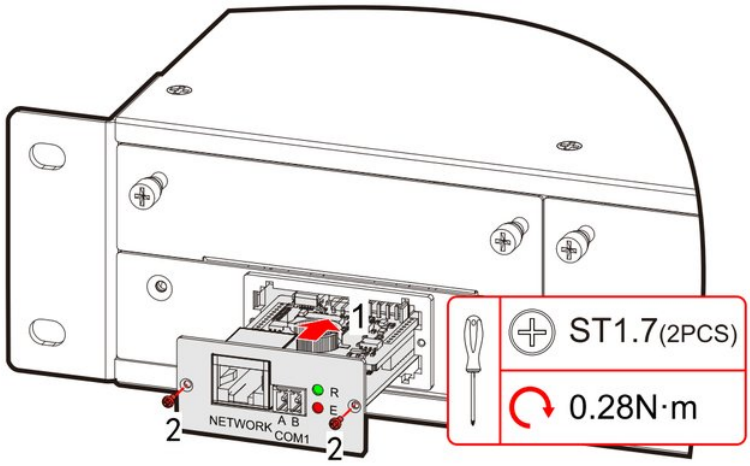

FIGURE 3-18 Install the SNMP card

3.6.2 Expansion Card Installation

Expansion cards include dry contact expansion card and BMS expansion card. The installation method is the same. The following takes the dry contact expansion card as an example.

PROCEDURE

1 Unscrew the screws of the dry contact expansion card plate on the system control box, and remove the dry contact expansion card plate.

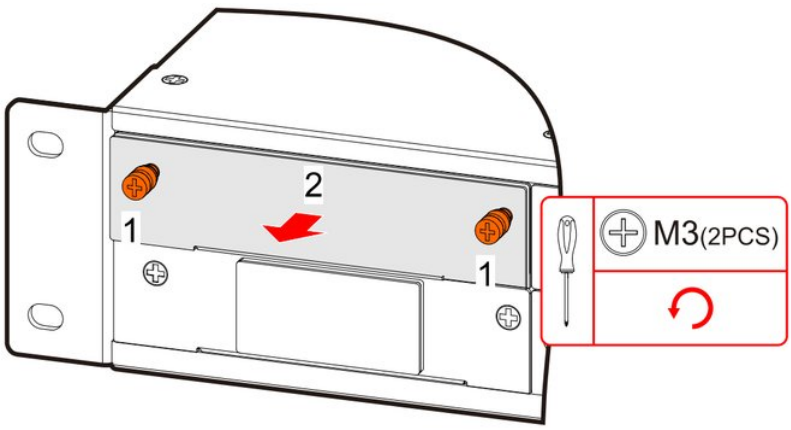

FIGURE 3-19 Dismantle the dry contact expansion card plate

2 Install the dry contact expansion card on the system control box.

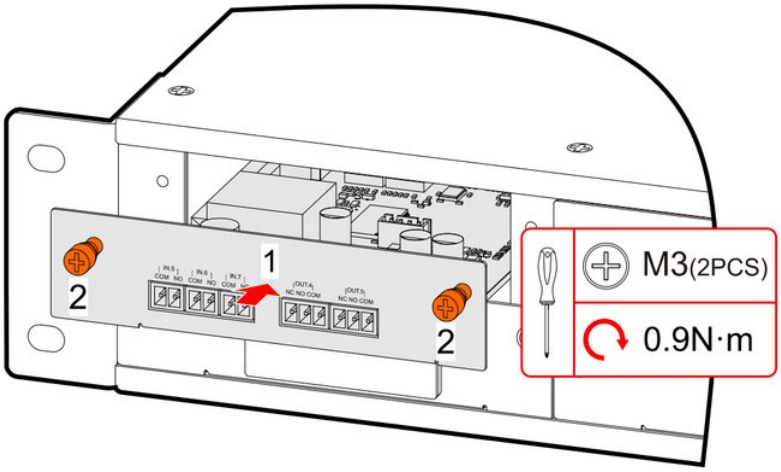

FIGURE 3-20 Install the dry contact expansion card

3.6.3 Parallel/BSC Kit Installation

Connect all parallel/BSC ports of UPS in the parallel system via parallel /BSC kit, and tighten screws on the corresponding parallel /BSC ports.

> **NOTE**
> The wire color below is just used to distinguish the different ports, the actual wire color may not be the same.

- Parallel/BSC kit installation of IST6-200, IST6-300

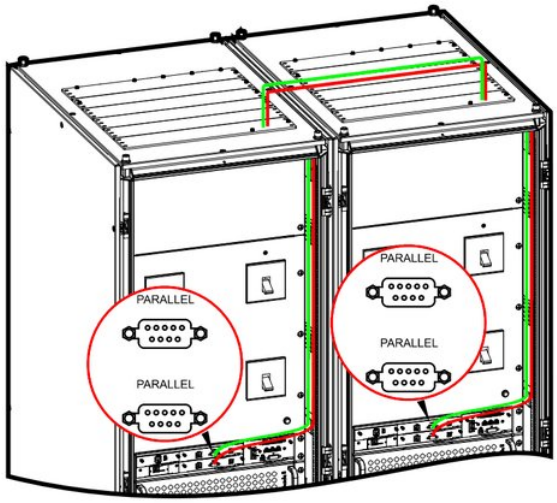

FIGURE 3-21 Parallel/BSC kit installation diagram

- Parallel/BSC kit installation of IST6-400, IST6-500

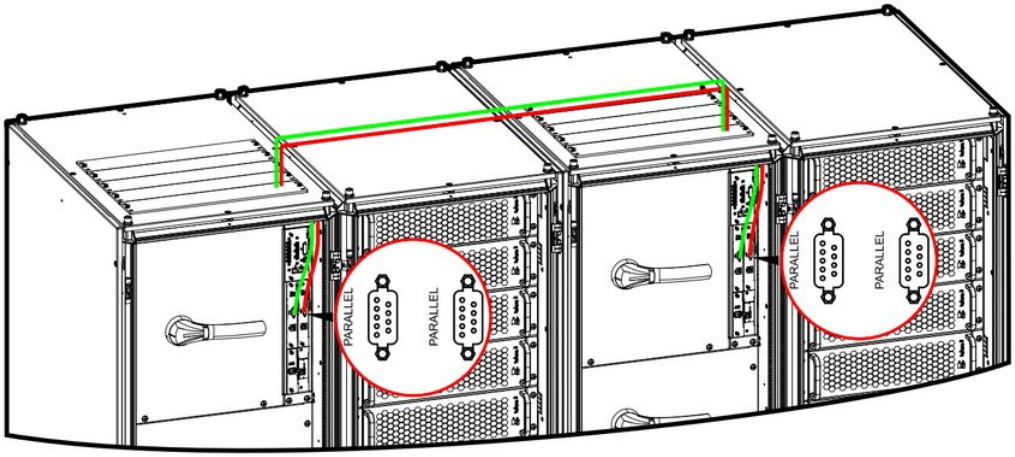

FIGURE 3-22 Parallel/BSC kit installation diagram (top wiring)

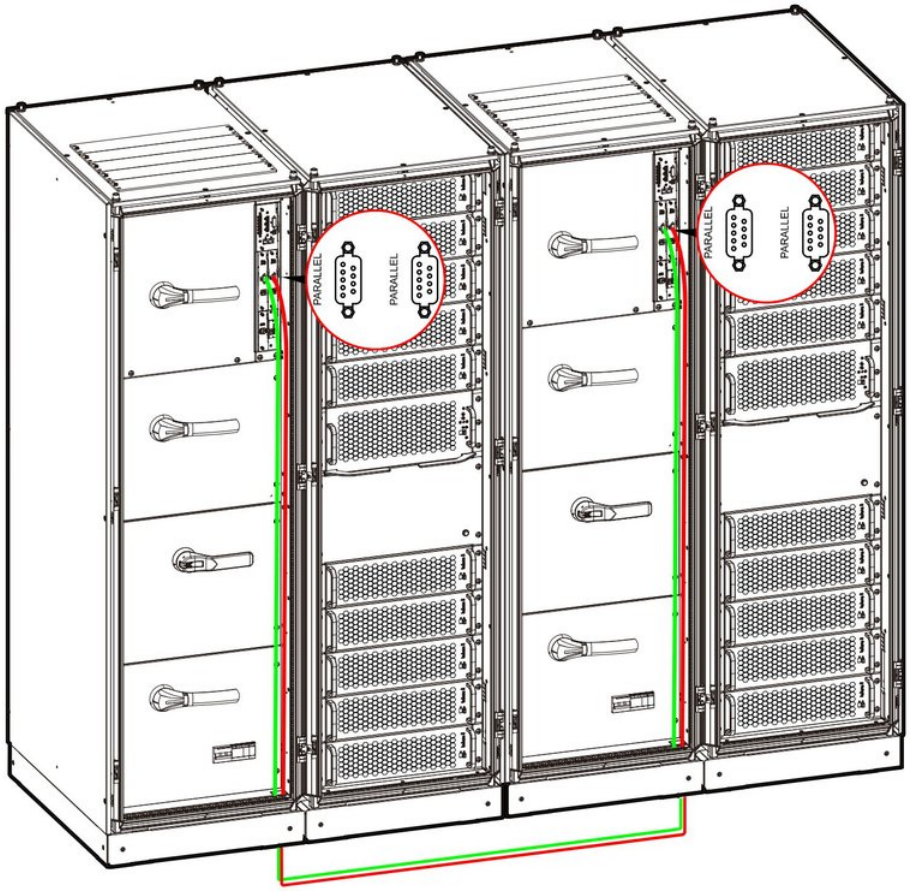

FIGURE 3-23 Parallel/BSC kit installation diagram (bottom wiring)

NOTE

If the bottom wiring is used, knock off the bottom plate at the bottom front plate, file the disconnected area with a file and then install the parallel/BSC kit.

3.6.4 Battery Temperature Compensation Kit Installation

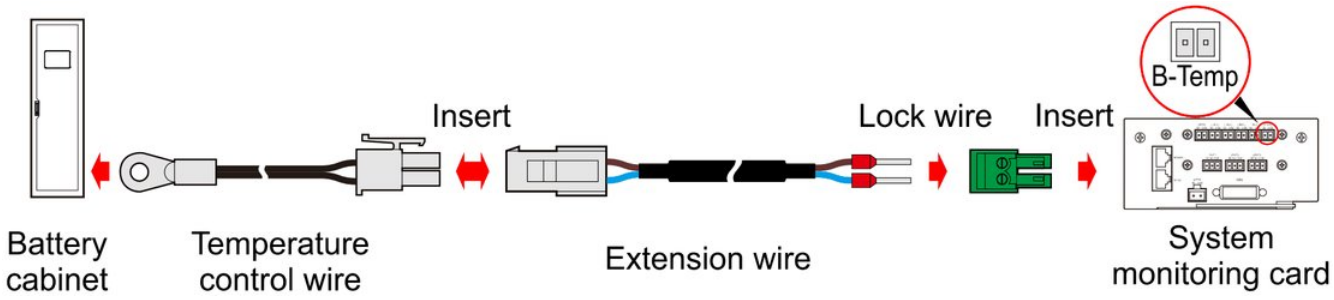

FIGURE 3-24 Battery temperature compensation kit installation diagram

> **NOTE**
> Lock the temperature control wires in the battery cabinet at the location where the temperature needs to be measured.

3.6.5 Surge Protection Facility Installation

> **DANGER**
> Before installing the surge protection facility onsite, power off UPS completely.

SURGE PROTECTION FACILITY INSTALLATION OF IST6-200, IST6-300

PROCEDURE

1. Unscrew screws on the rear plate of UPS and remove the rear plate.

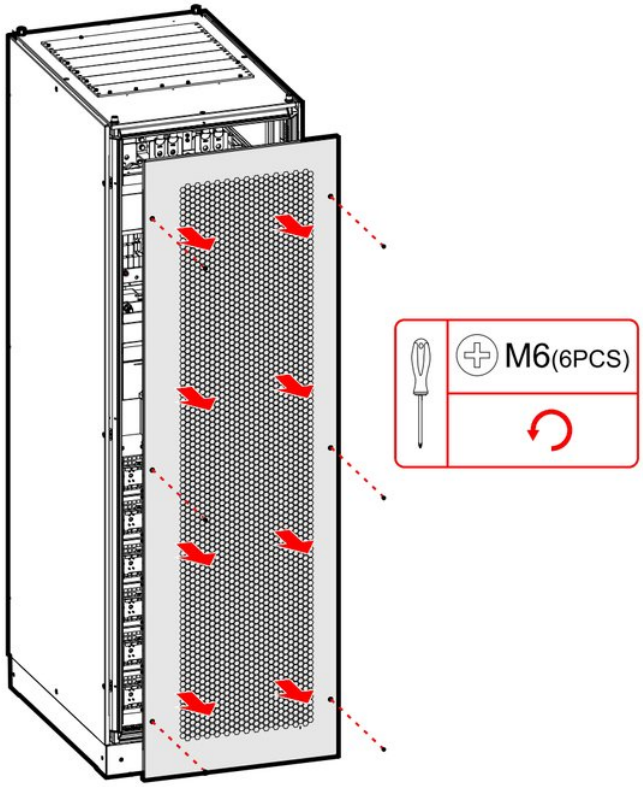

FIGURE 3-25 Dismantle the rear plate

2. Install the surge protection plate on the UPS.

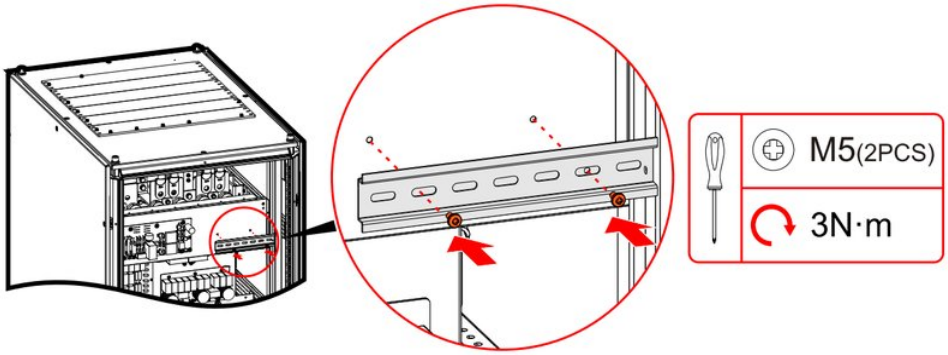

FIGURE 3-26 Install the surge protection plate

3 Install SPD, SPD switch and fastener on the surge protection plate.

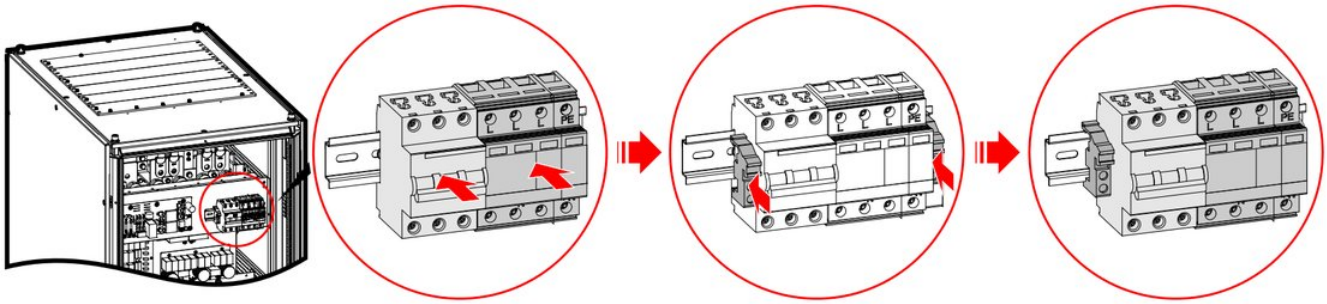

FIGURE 3-27 Install the SPD and SPD switch

4 Connect the wires of SPD and SPD switch to the corresponding copper bar.

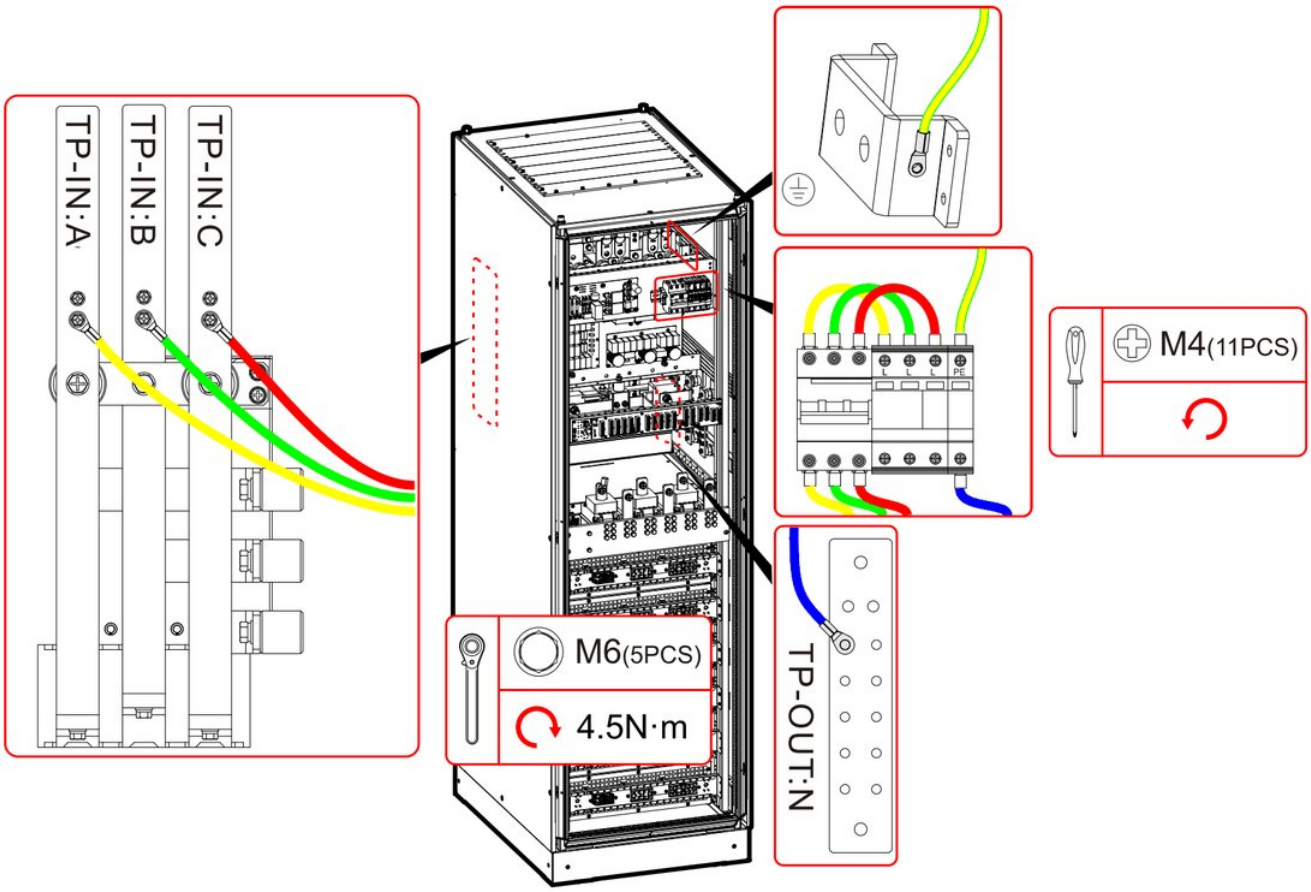

FIGURE 3-28 Surge protection facility wiring diagram

5 Install the rear plate.

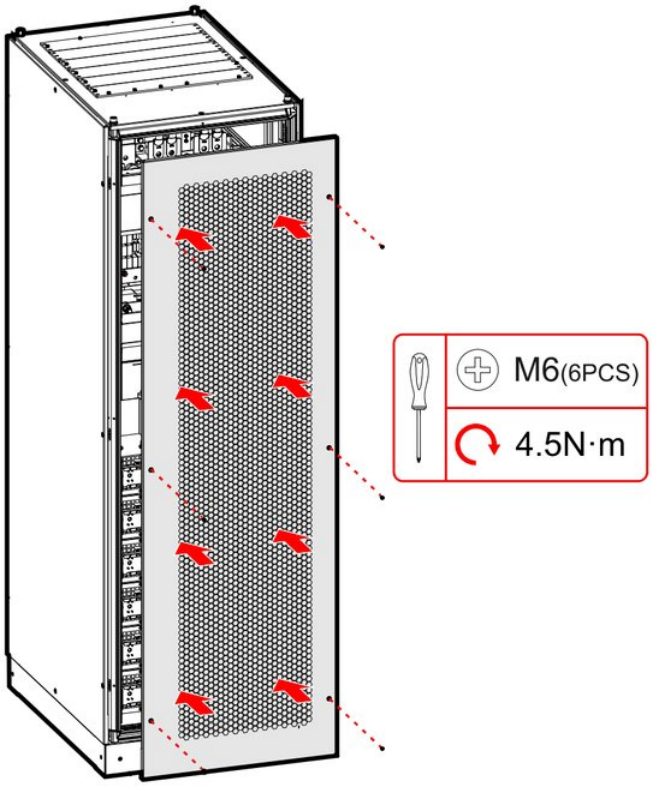

FIGURE 3-29 Install the rear plate

SURGE PROTECTION FACILITY INSTALLATION OF IST6-400, IST6-500

PROCEDURE

1 Open the front door of UPS, unscrew screws on the front plate and remove the front plate.

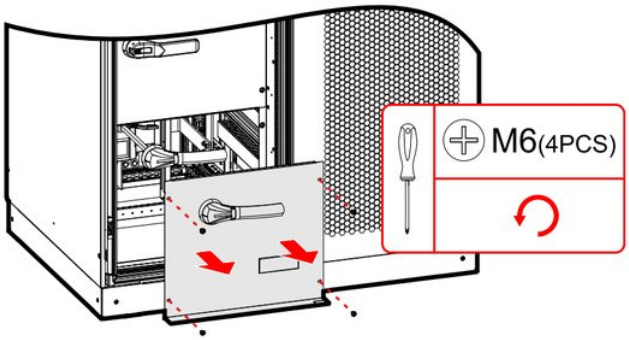

FIGURE 3-30 Dismantle the front plate

2 Install the surge protection plate on the UPS.

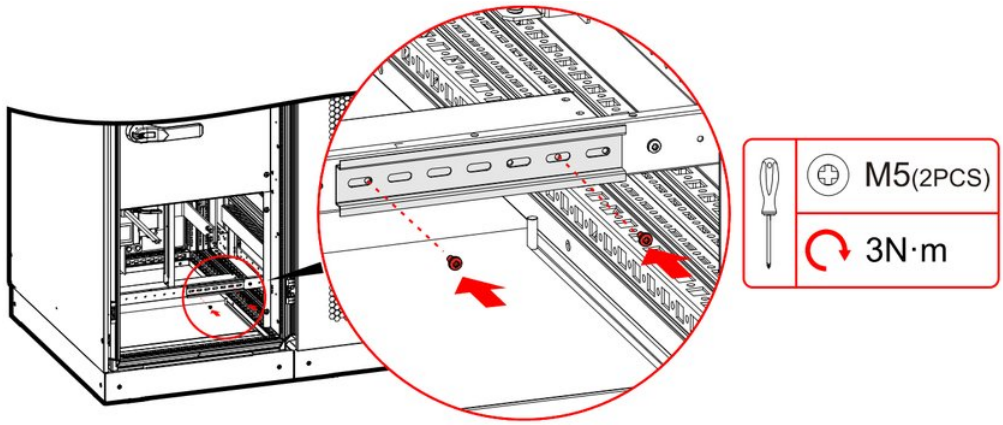

FIGURE 3-31 Install the surge protection plate

3 Install SPD, SPD switch and fastener on the surge protection plate.

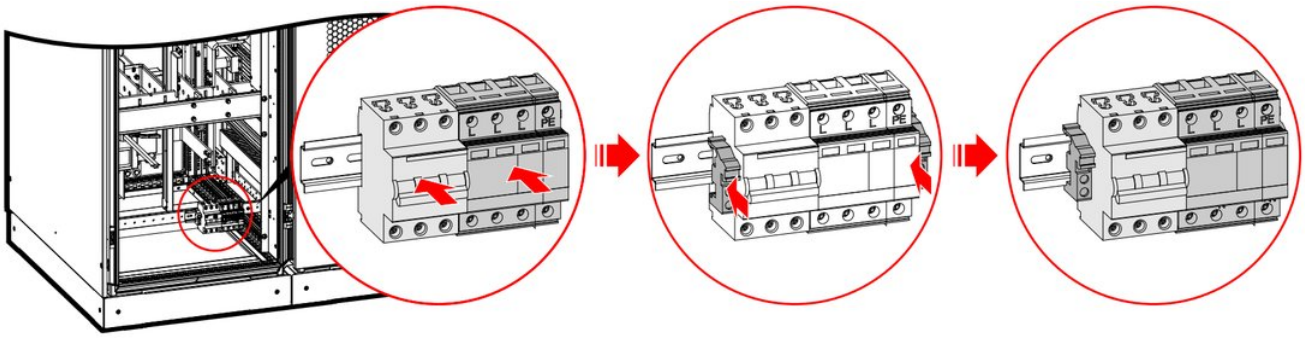

FIGURE 3-32 Install SPD and SPD switch

4 Connect the wires of SPD and SPD switch to the corresponding copper bar.

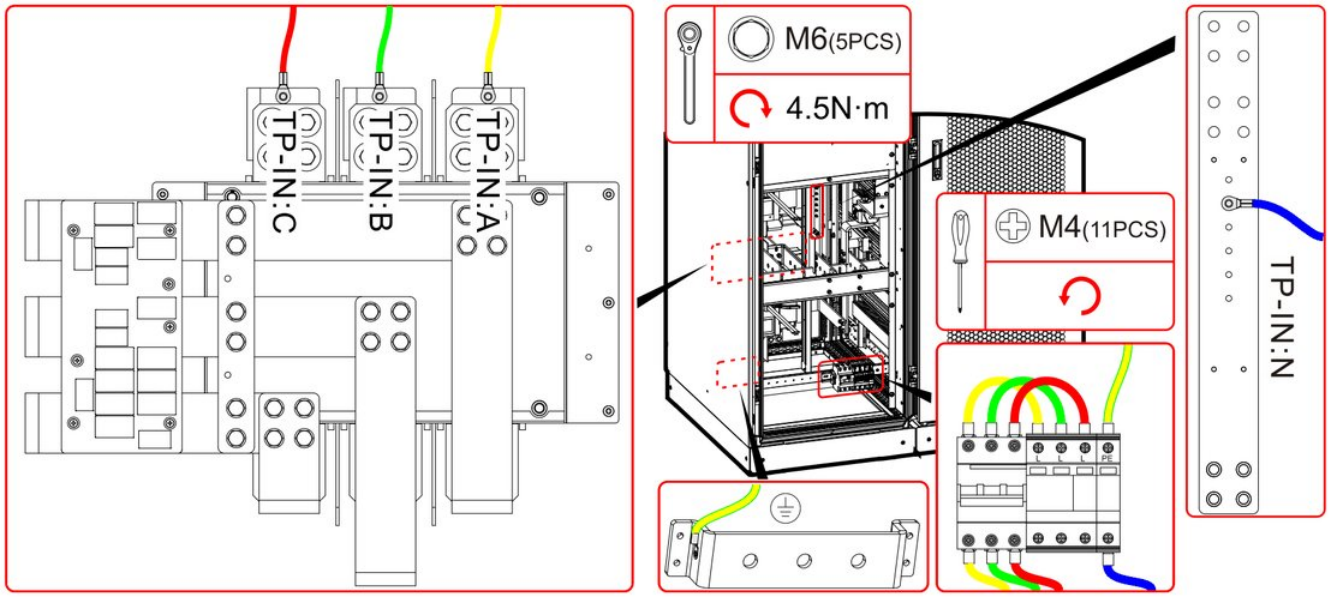

FIGURE 3-33 Surge protection facility wiring diagram

5 Knock off the plate where the surge protection facility installs, and file the disconnected area with a file.

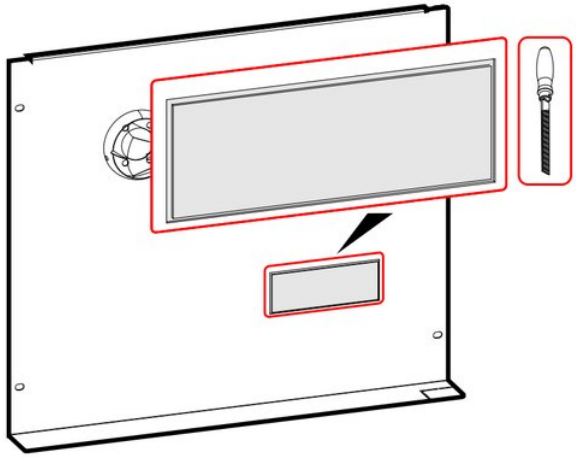

FIGURE 3-34 Plate where the surge protection facility installs

6 Install the front plate, and close the front door.

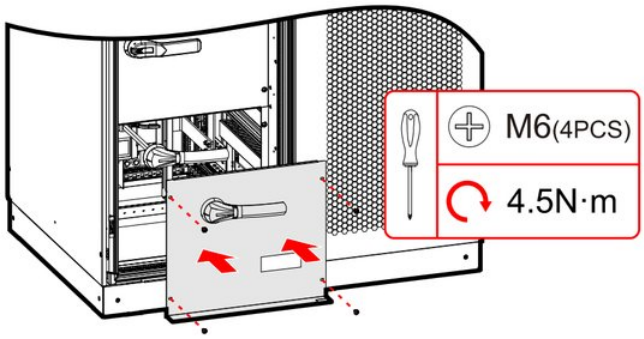

FIGURE 3-35 Install the front plate.

3.6.6 Single Power Source Kit Installation

DANGER

Before installing the single power source kit onsite, power off UPS completely.

SINGLE POWER SOURCE KIT INSTALLATION OF IST6-200, IST6-300

PROCEDURE

1 Open the front door of UPS, unscrew screws on the front plate and rear plate, and remove the front plate and rear plate.

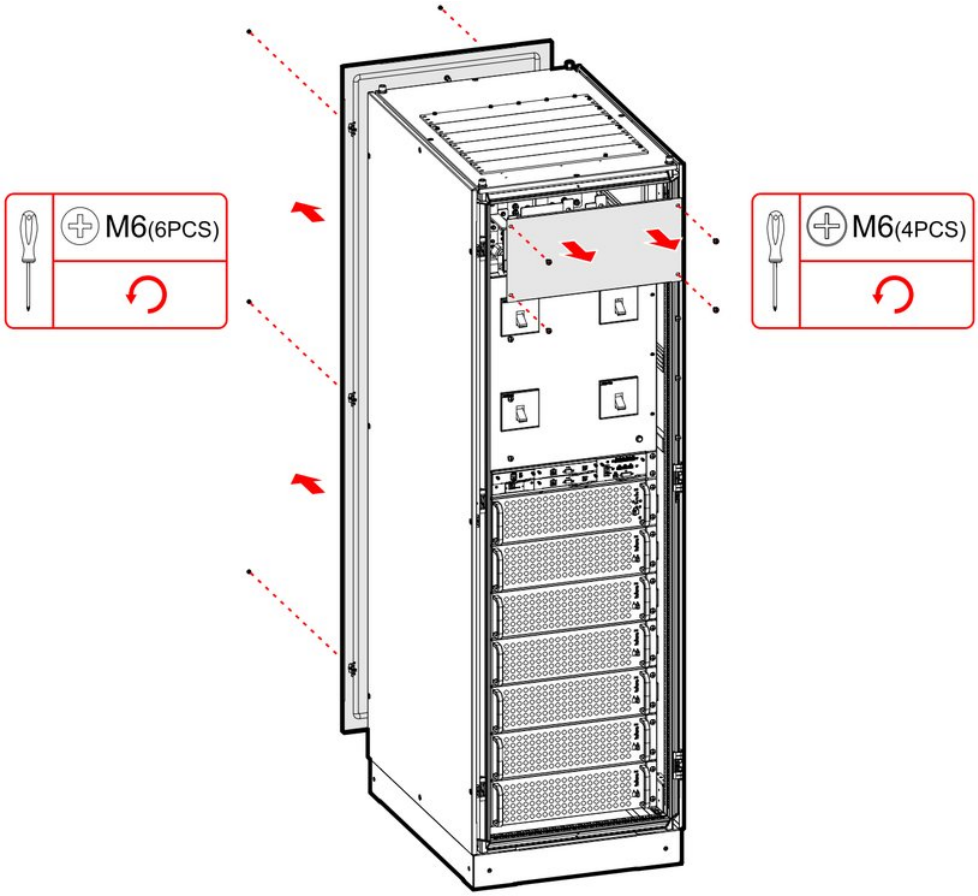

FIGURE 3-36 Dismantle the front plate and rear plate

2 Install the mains and bypass with same power kit to mains copper bars and bypass copper bars respectively.

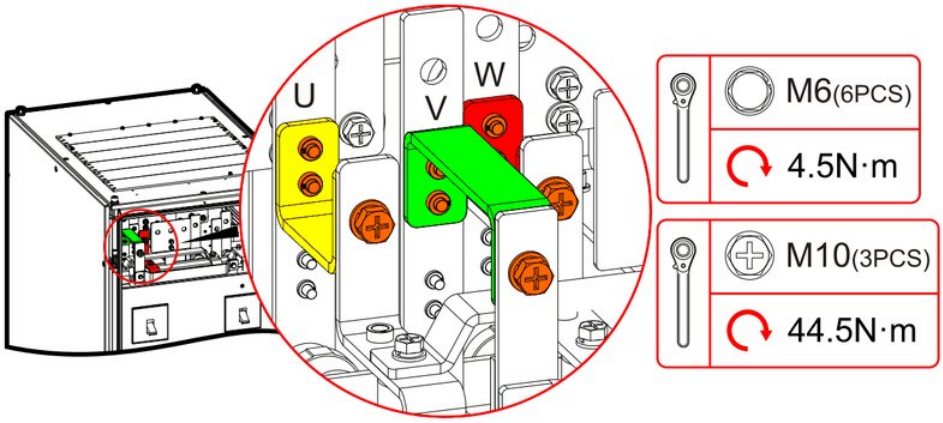

FIGURE 3-37 Install the mains and bypass with same power kit

3 Install the front plate and rear plate, and close the front door.

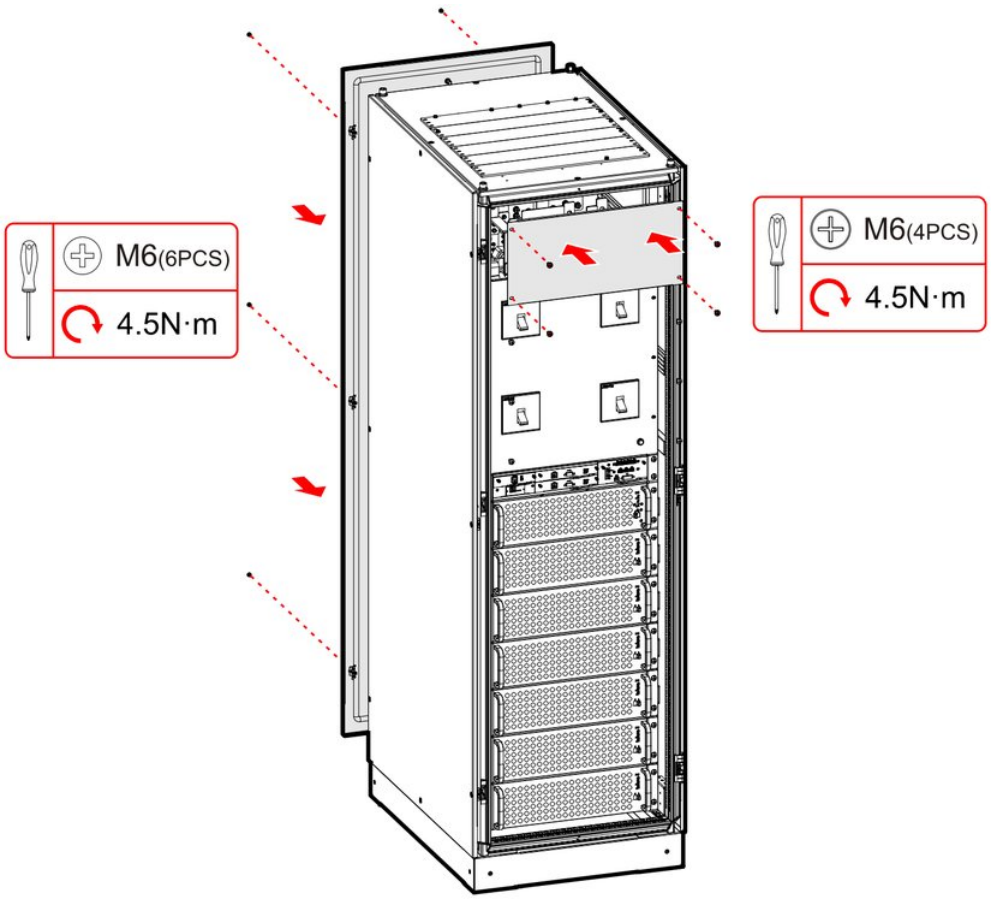

FIGURE 3-38 Install the front plate and rear plate

SINGLE POWER SOURCE KIT INSTALLATION OF IST6-400, IST6-500

PROCEDURE

1. Unscrew screws on the rear plate, and remove the rear plate.

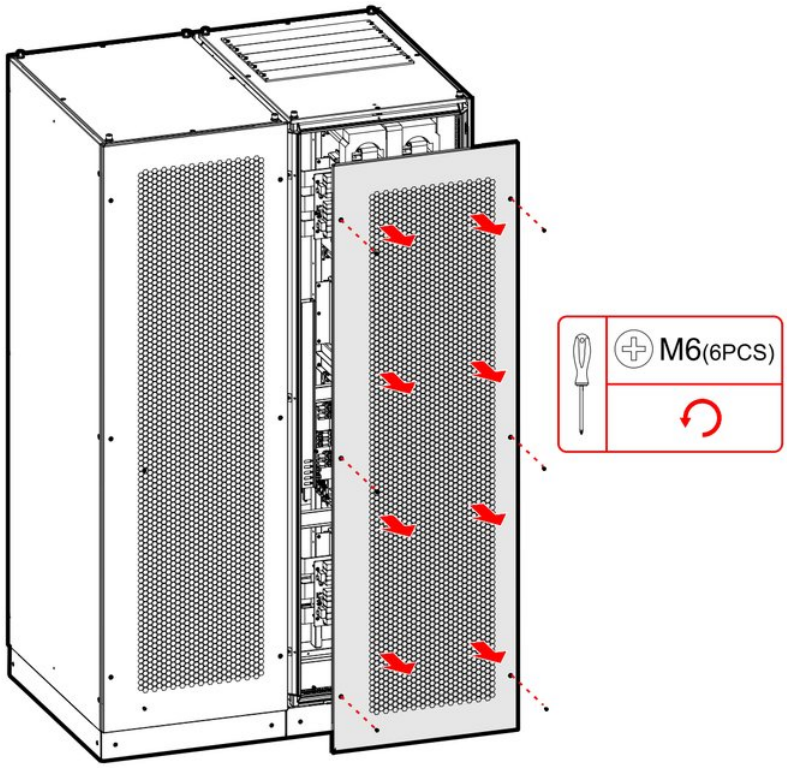

FIGURE 3-39 Dismantle the rear plate

2 Install the mains and bypass with same power kit to mains copper bars and bypass copper bars respectively.

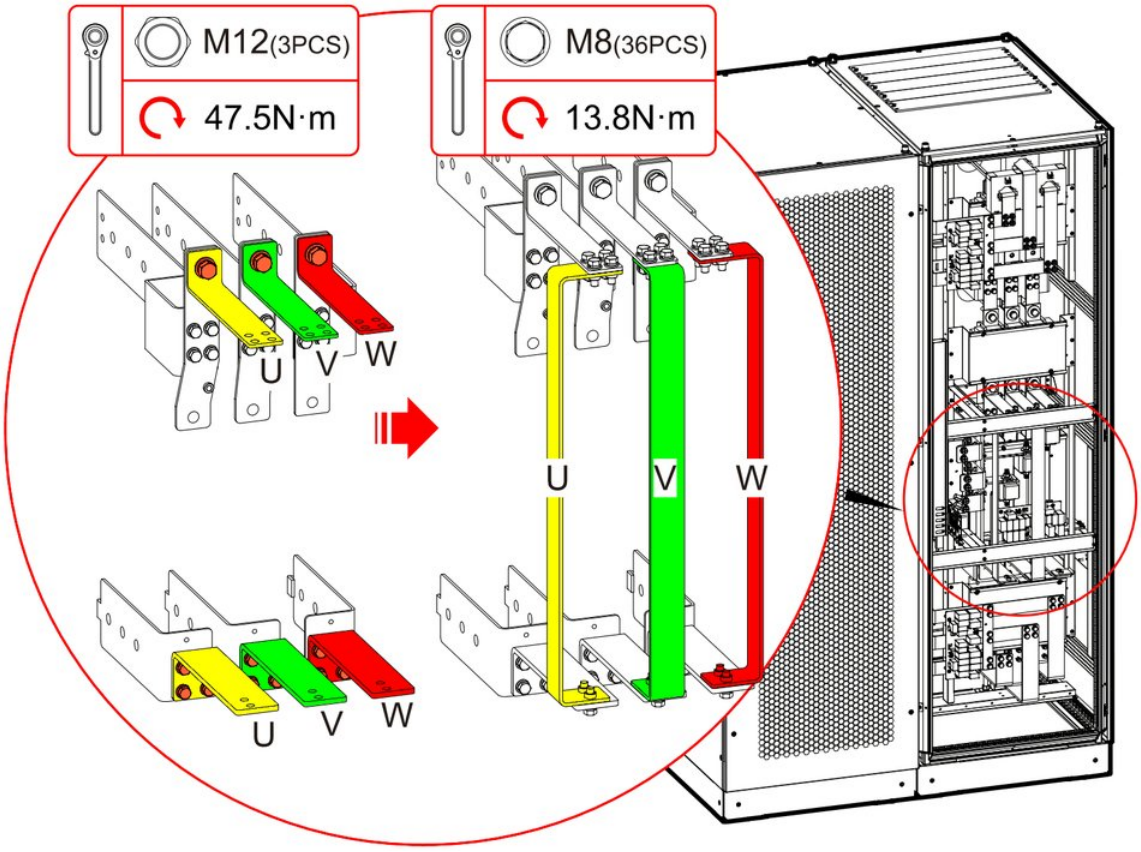

FIGURE 3-40 Install the mains and bypass with same power kit of IST6-400

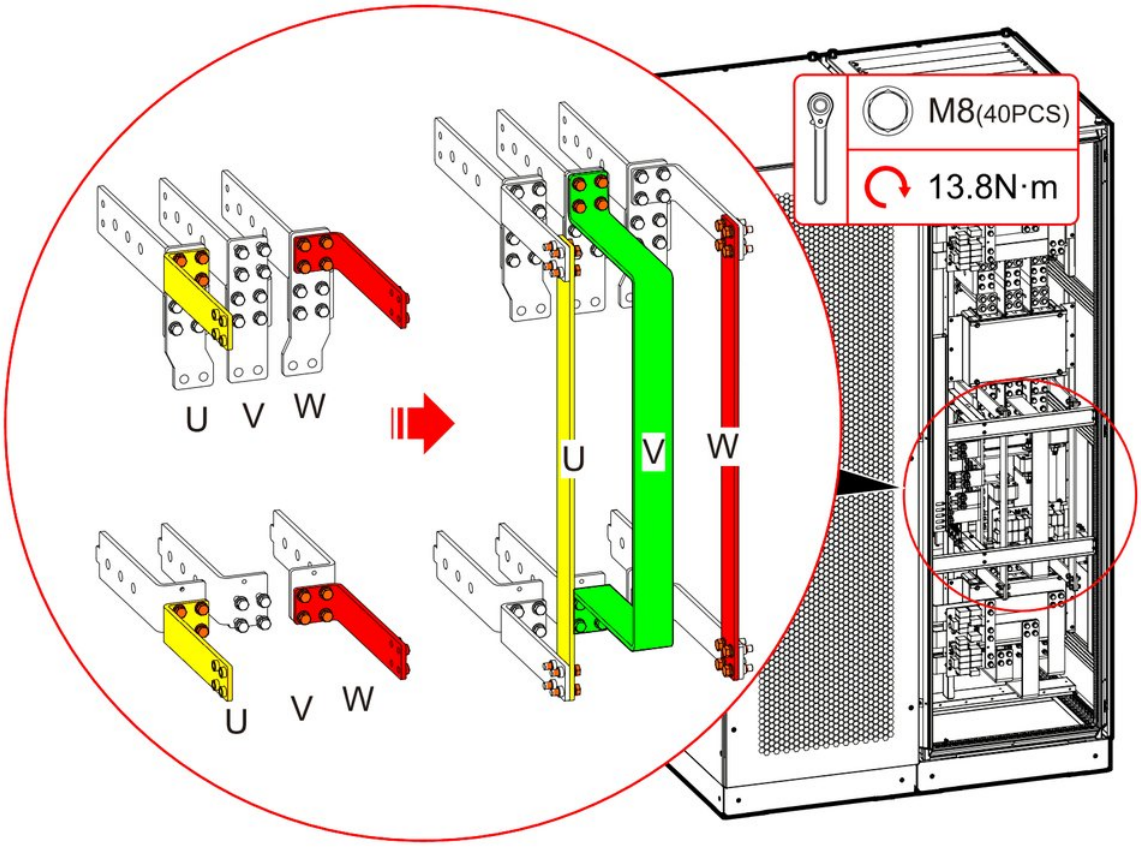

FIGURE 3-41 Install the mains and bypass with same power kit of IST6-500

3 Install the rear plate.

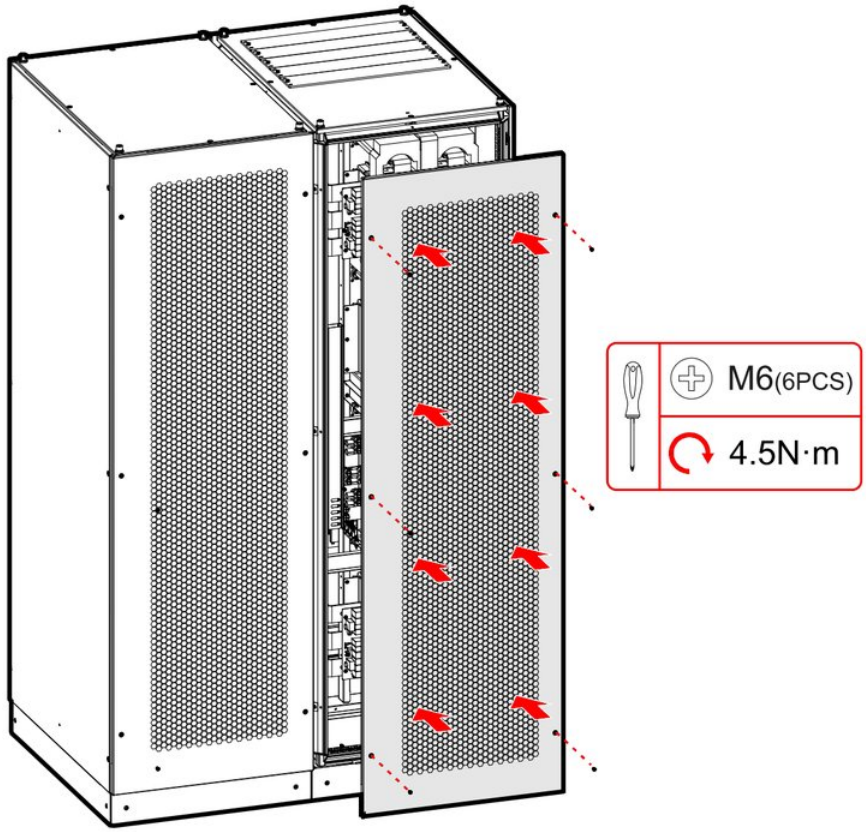

FIGURE 3-42 Install the rear plate

3.7 Electrical Connection

DANGER

Before performing electrical connection, ensure that the mains switch, output switch, bypass switch, maintenance bypass switch, and external battery switch are off.

CAUTION

- When making wires, keep them away from the device to avoid debris from accidentally entering the device and causing spark, which may cause in device damage and personal injury.
- To prevent the wire from excessive tension, which may cause poor connection. It is recommended to reserve enough space before connecting wire to the corresponding port.

NOTE

The wire colors in all electrical connection diagrams in this document are for reference only. The wire selection must meet the local wire standard. The yellow and green wires can only be used for protective earthing.

3.7.1 Electrical Connection Preparation

WIRE PREPARATION

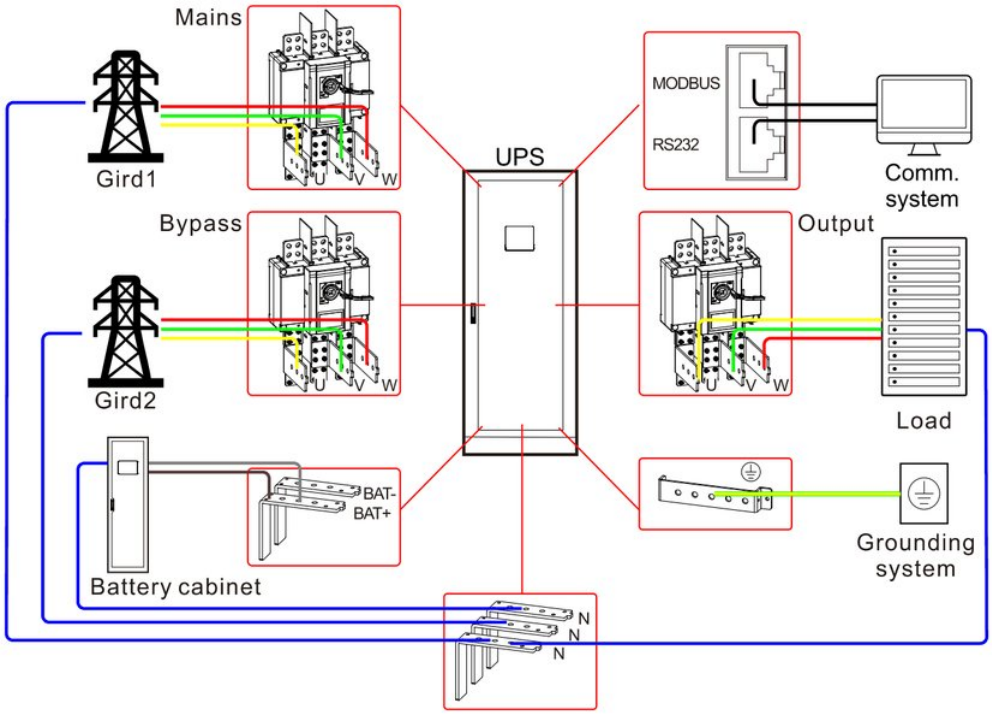

FIGURE 3-43 Electrical connection overview diagram

TABLE 3-5 Recommended requirements for wires, terminals and bolts

Item / Model		IST6-200	IST6-300	IST6-400	IST6-500	Source
Mains input						
Mains input current (A)		345	518	690	863	-
Cross-sectional area of wire(mm2)	U/V/W/N	2*(4*120)	2*(4*185)	2*(4*185)	2*(4*240)	Prepared by customer
Terminal model		DT-120	DT-185	DT-185	DT-240	Prepared by customer
Bolt specification		M12*35	M12*35	M10*40	M10*40	Delivered with UPS
Bypass input						
Bypass input current (A)		303	455	606	758	-
Cross-sectional area of wire (mm^2)	U/V/W/N	2*(4*120)	2*(4*185)	2*(4*185)	2*(4*240)	Prepared by customer
Terminal model		DT-120	DT-185	DT-185	DT-240	Prepared by customer
Bolt specification		M12*35	M12*35	M10*40	M10*40	Delivered with UPS
Output						
Output current (A)		303	455	606	758	-
Cross-sectional area of wire (mm^2)	U/V/W/N (select larger cross-sectional area of neutral wire for non- linear load.)	2*(4*120)	2*(4*185)	2*(4*185)	2*(4*240)	Prepared by customer
Terminal model		DT-120	DT-185	DT-185	DT-240	Prepared by customer

Item ⌄		Model ›	IST6-200	IST6-300	IST6-400	IST6-500	Source
Bolt specification			M12*35	M12*35	M10*40	M10*40	Delivered with UPS
Battery input							
Configure 40 cells of 12V lead-acid battery	Nominal discharge current of lead-acid battery (A)		434	651	868	1085	-
	Max. discharge current of lead-acid battery (A)		496	744	992	1240	-
	Cross-sectional area of wire (mm²)	+/N/-	2*(3*120)	2*(3*185)	3*(3*185)	3*(3*240)	Prepared by customer
	Terminal model		DT-120	DT-185	DT-185	DT-240	Prepared by customer
	Bolt specification		M12*35	M12*35	M10*40	M10*40	Delivered with UPS
Equipotential ground							
Cross-sectional area of wire (mm²)		PE	120	185	185	240	Prepared by customer
Terminal model			DT-120	DT-185	DT-185	DT-240	Prepared by customer
Bolt specification			M12*35	M12*35	M10*40	M10*40	Delivered with UPS

NOTE

- Select wires based on onsite survey data. The recommended wires are for reference only.
- Wire selection, connection, and routing should comply with local laws and regulations.
- When external conditions such as the laying method or ambient temperature change, refer to the IEC-60364-5-52 or local regulations for verification.
- If the major load is a non-linear load, the cross-sectional area of output neutral wire needs to be increased to 1.5 ~ 1.7 times.
- The nominal discharge current of lead-acid battery is the current value at ±240V voltage when configure 40 cells of 12V lead-acid battery. The max. discharge current of lead-acid battery is the current value when a single 12V battery end discharges to 10.5V. Battery wire specifications are 40 cells by default, compatible with 30 to 50 cells.
- If the system is equipped with Li-battery, the recommended battery input wire specifications refer to **IEC-60364-5-52** and **lithium battery system user manual**.
- When mains and bypass with the same power, the input wire specifications are the same as the mains input wire specifications.
- The recommended wire in the above table is only applicable to the following conditions: - Laying method: Wires are laid in a single layer (IEC60364-5-52). The distance between wires is greater than twice the cross-sectional area of wire. - AC voltage loss is less than 3%, DC voltage loss is less than 1%. - Wire type: It is recommended to use copper conductor soft wire with the max. working temperature of 90 °C, so as to avoid poor terminal contact caused by bending stress. - It is recommended that the length of AC wires should not be greater than 30m and the length of DC wires should not be greater than 50m. - In parallel system, the length and specification of power wire of each UPS should be the same as far as possible, including the bypass input wire and output wire, so that it can achieve the equalized current in the bypass mode.

WARNING

Do not overload wire work!

WIRE CONNECTION REQUIREMENTS

WARNING

When connecting, ensure that the connector is tight. The poor connection or contact surface oxidation will cause excessive heat, which may cause a fire.

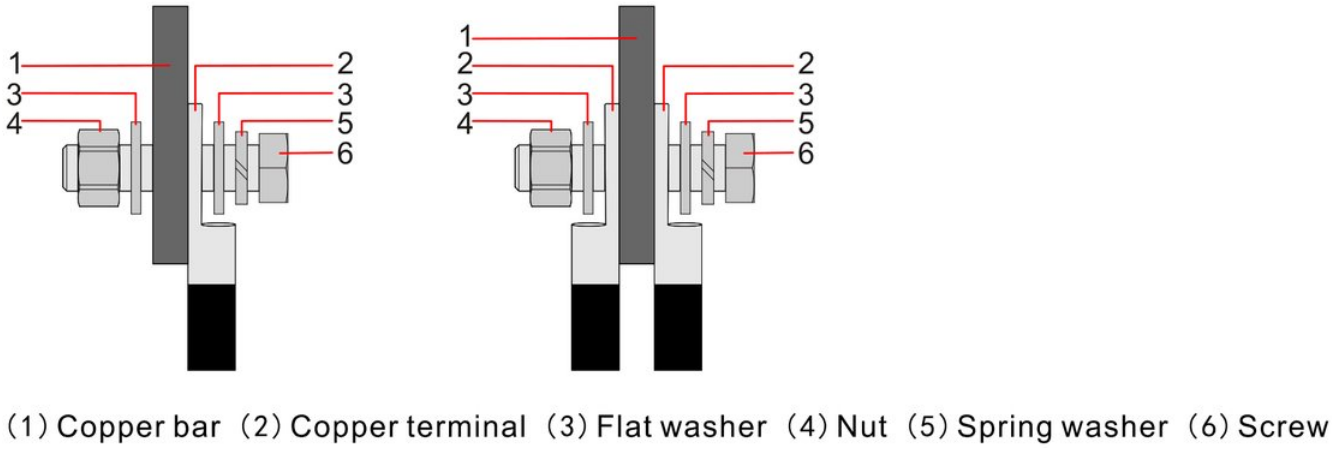

FIGURE 3-44 Copper wire terminal connection diagram

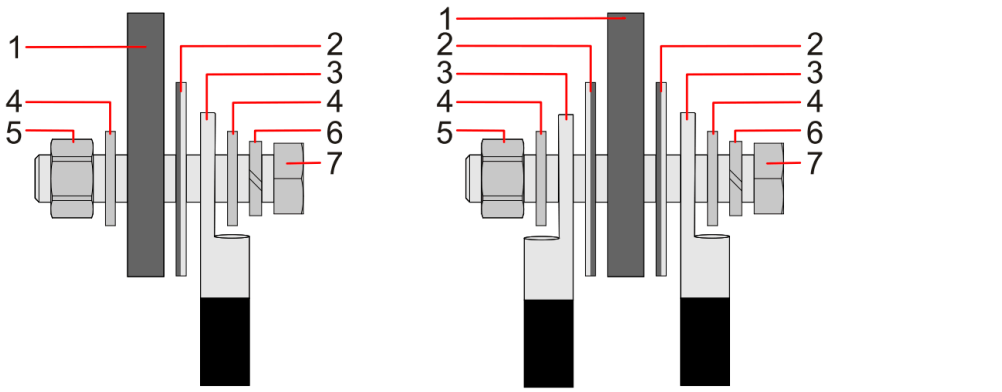

FIGURE 3-45 Aluminum wire terminal connection diagram

CAUTION

- When using a copper-aluminum plate, pay attention to the front and back sides to ensure that the aluminum surface of plate is in contact with the aluminum terminal, and the copper surface is in contact with copper bar.
- If a busbar has multiple adjacent terminals that need to be connected, an entire copper- aluminum plate can be used.

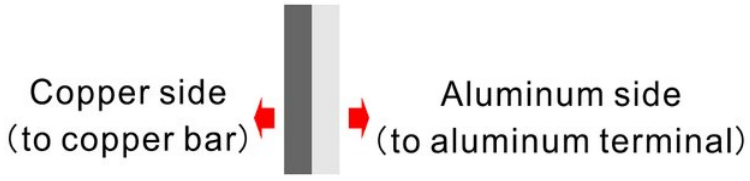

FIGURE 3-46 Copper-aluminum plate connection direction

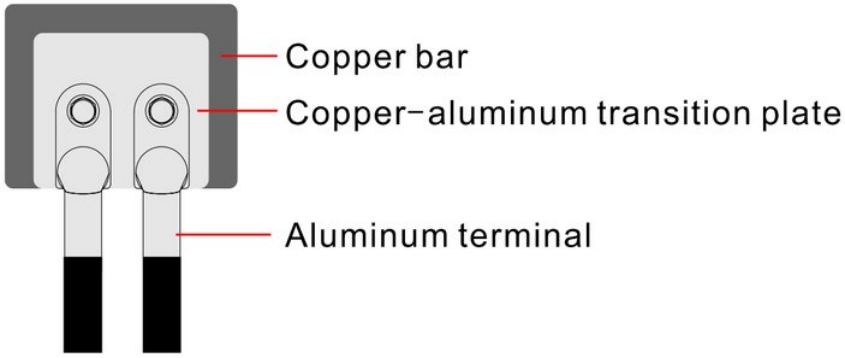

FIGURE 3-47 Copper-aluminum plate connection diagram

CRIMP DT TERMINAL

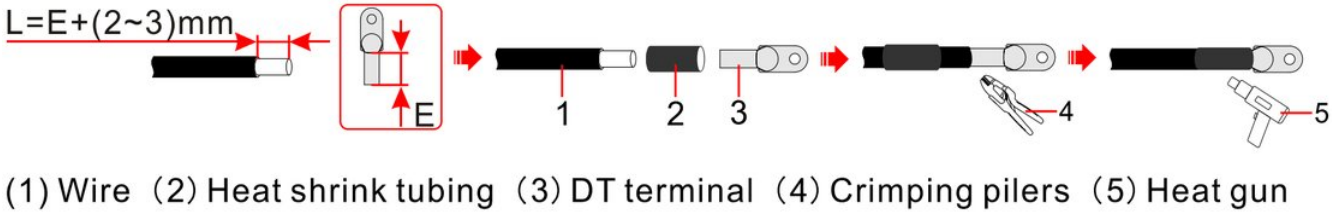

FIGURE 3-48 Crimp DT terminal

BREAKER PREPARATION

An independent breaker is added on the AC side of UPS to protect load. When an accident occurs on UPS or mains side, the breaker can be disconnected immediately to achieve selective protection.

WARNING

- No loads may be connected between UPS and breaker.
- Multiple UPSs may not share an AC breaker.

TABLE 3-6 Recommended input front-end/output back-end breaker specifications

Model Type	IST6-200	I	IST6-400	IST6-500
Mains input breaker	400A/3P	6	800A/3P	1000A/3P
Bypass input breaker	400A/3P	6	630A/3P	800A/3P
Output back-end breaker	400A/3P	6	630A/3P	800A/3P
Maintenance bypass breaker	400A/3P	6	630A/3P	800A/3P

NOTE

- The recommended breaker specifications only apply to the device where the short-circuit current is less than 65kA.
- The recommended breaker specifications for the mains input are for reference only.
- Bypass input breaker and output back-end breaker refer to the recommended UPS rated current. If UPS needs to be overloaded, adjust the breaker specifications based on the overloaded current.
- Maintenance bypass breakers are recommended with reference to single UPS. In the parallel system, adjust the breaker specifications based on the total current.
- Breakers with leakage protection are not recommended to prevent misoperation of the breaker due to leakage current generated by UPS.
- When multiple breakers exist at the output back-end, ensure that each breaker specification does not exceed the recommended breaker specification.

3.7.2 UPS Connection

WARNING

- Do not reverse connect grounding wire and neutral wire, live wire and neutral wire, which may cause electrical short circuit!
- The grounding should be good, and the neutral-to-grounding voltage should not be higher than 5V.

CAUTION

When wiring, ensure that the contact between wire and terminal is firm. Do not make any poor connection or connect wires reversely.

IST6-200, IST6-300 WIRING

PROCEDURE

1. Use a key to open the front door of UPS.
2. Switch off the mains switch, output switch, bypass switch, and maintenance bypass switch on the front plate of cabinet.
3. Unscrew screws on the front plate and rear plate, and remove the front plate and rear plate.

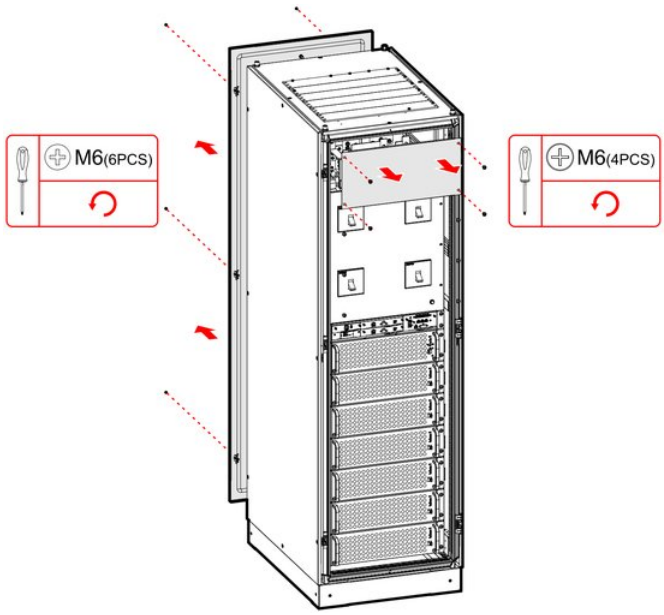

FIGURE 3-49 Dismantle the front plate and rear plate (Top wiring)

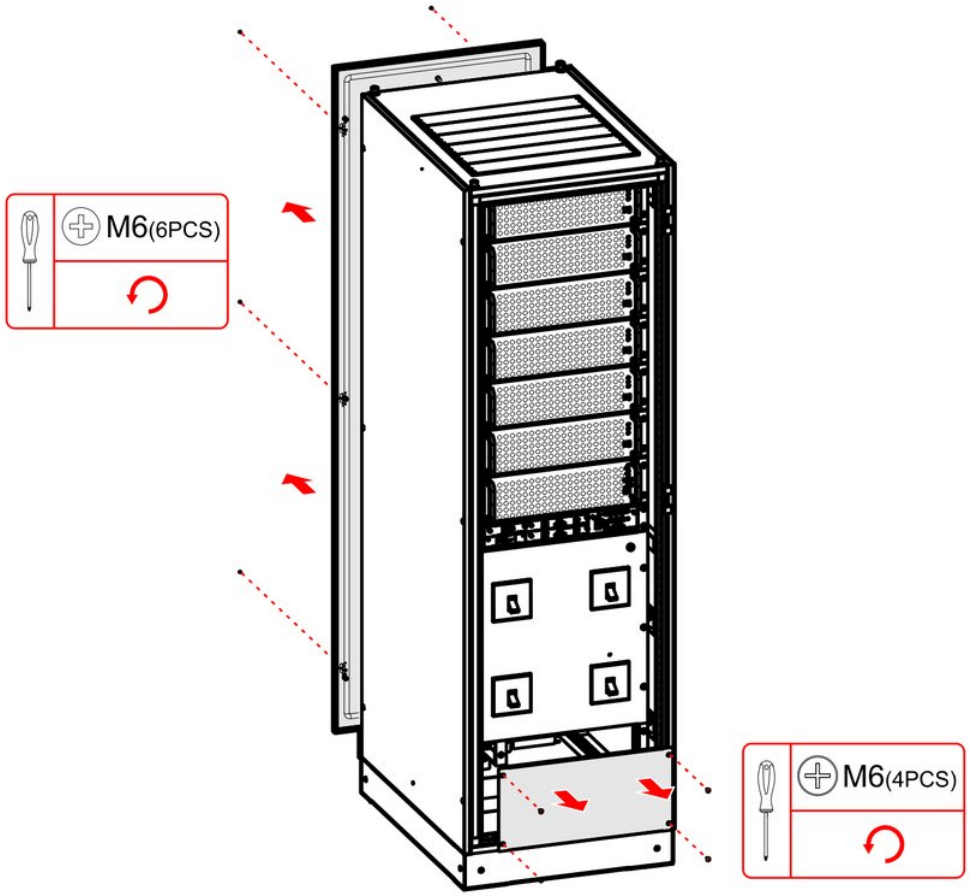

FIGURE 3-50 Dismantle the front plate and rear plate (Bottom wiring)

4. Crimp the DT terminal based on Figure 3-48.
5. Connect wires to the copper bar on UPS, and lock bolts.

- Connect the grounding wire. Connect the grounding copper bar to the equipotential coupling device on the site via grounding wires.

⚠ CAUTION

When installing UPS, it must be grounded first. When removing UPS, the grounding wire must be removed last.

- Connect the input and output wire.
- Connect the battery input wire.

⚠ CAUTION

- Battery positive and negative wires should be connected correctly and terminals connected firmly.

- Battery DC input requires to add a DC switch, the wiring is as shown in Figure 3-51.

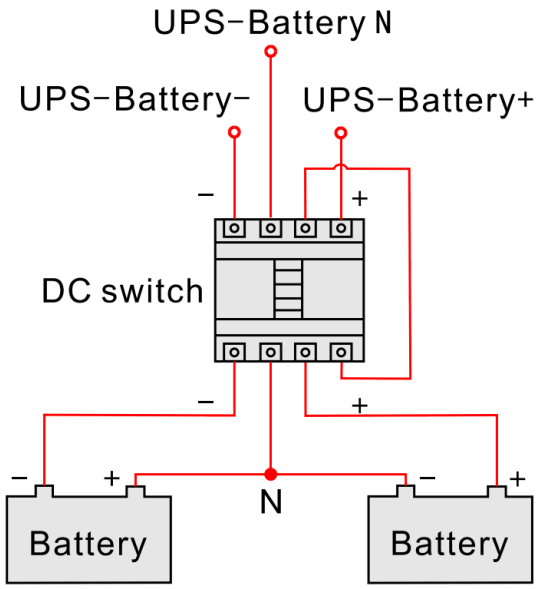

FIGURE 3-51 Battery wiring diagram

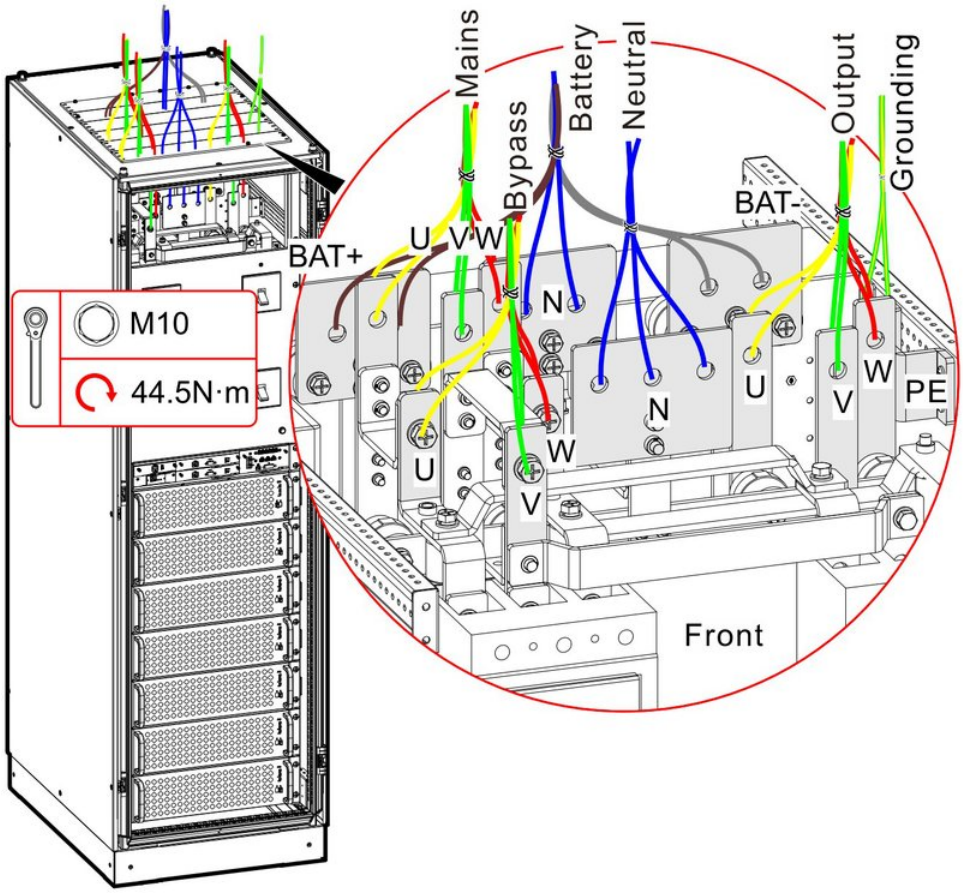

FIGURE 3-52 Wiring diagram (Top wiring)

NOTE

1. To ensure good electrical performance, connect the U, V, and W wires to the same side of the copper bar. 2. When wiring, draw wires to the epoxy board wiring hole on the top of cabinet. 3. When wiring, dismantle the epoxy board to facilitate wiring. After completing wiring, reinstall the epoxy board.

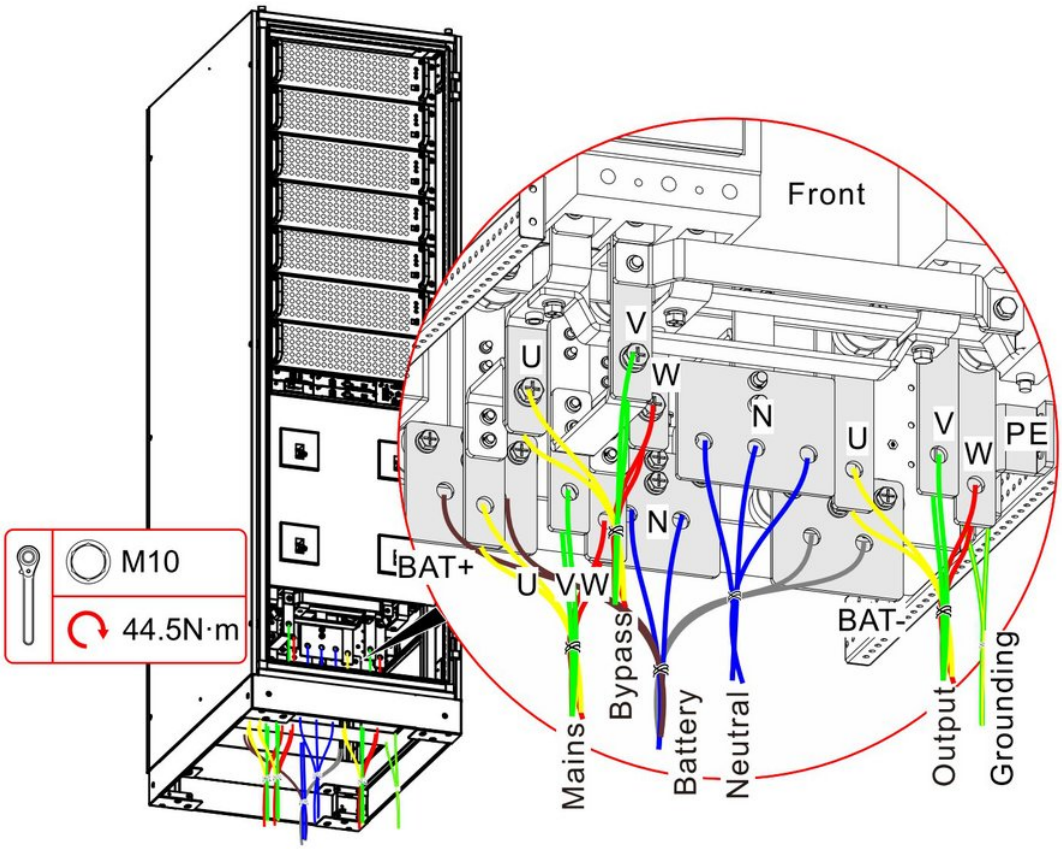

FIGURE 3-53 Wiring diagram(Bottom wiring)

6 Fix wires to the epoxy plates via cable ties, and install the front plate and rear plate.

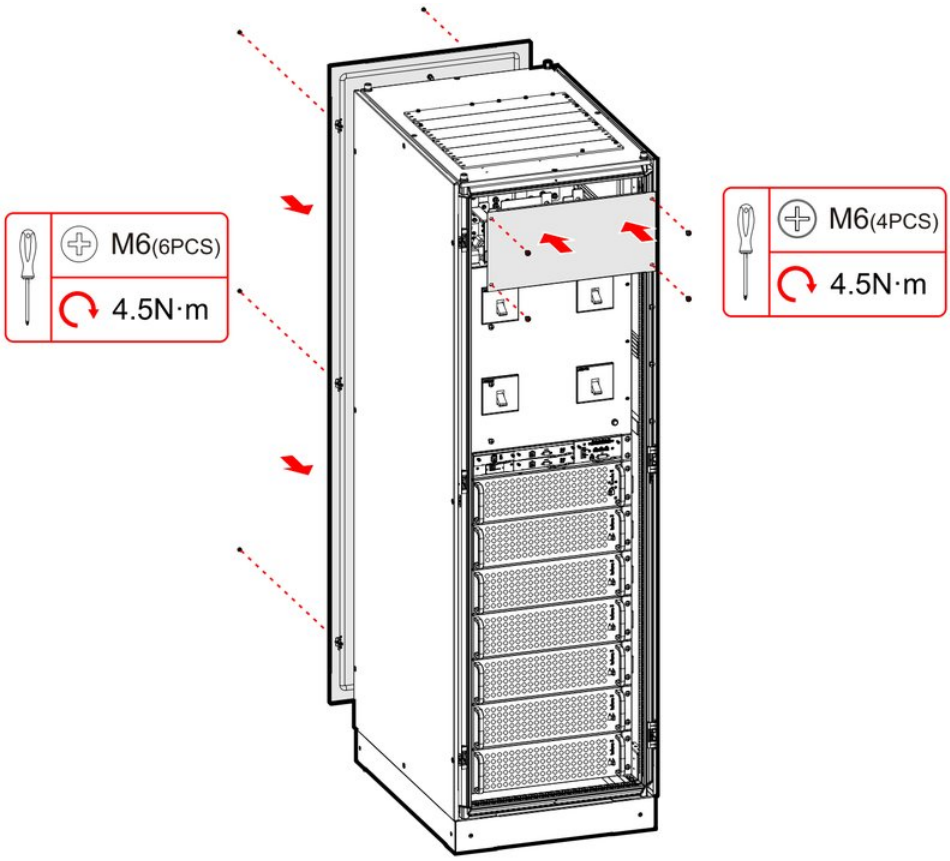

FIGURE 3-54 Install the front plate and rear plate (Top wiring)

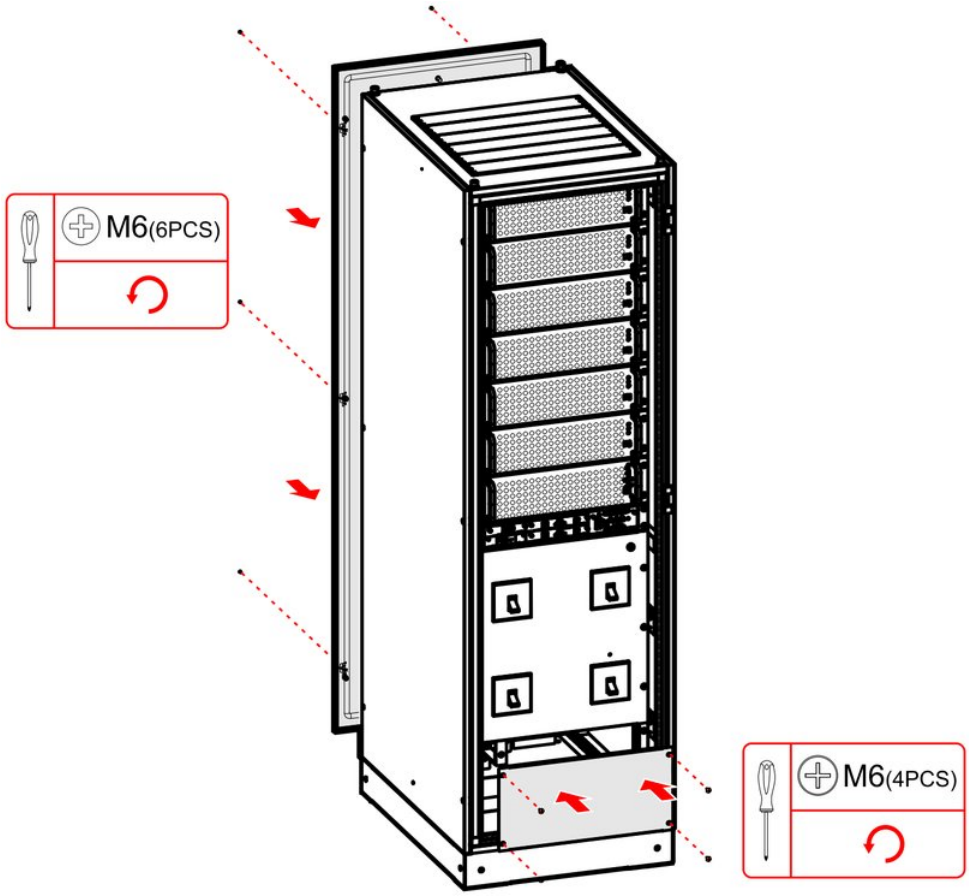

FIGURE 3-55 Install the front plate and rear plate (Bottom wiring)

7 Connect communication wires.

Both MODBUS port and RS232 port (pins definition as below) are connected via RJ45 plugs.

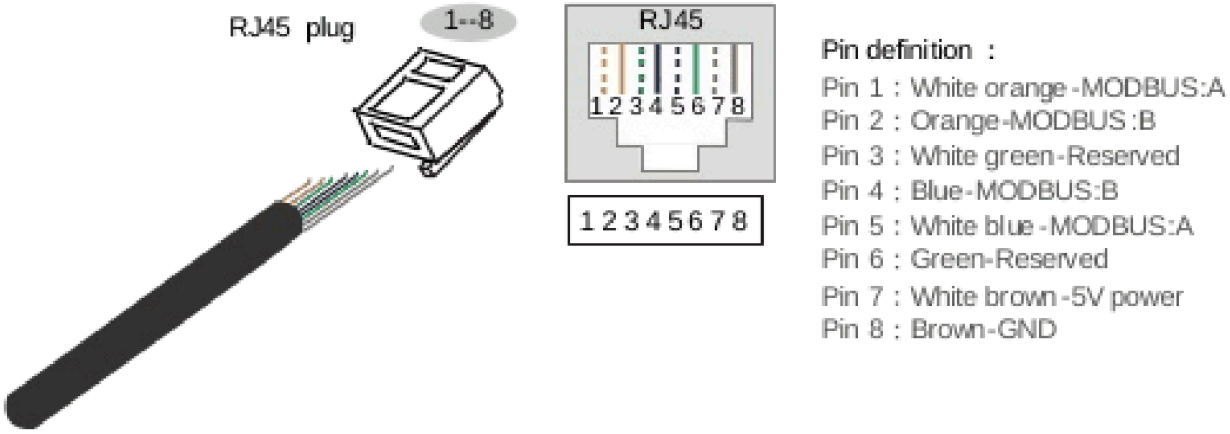

FIGURE 3-56 MODBUS port pin definition

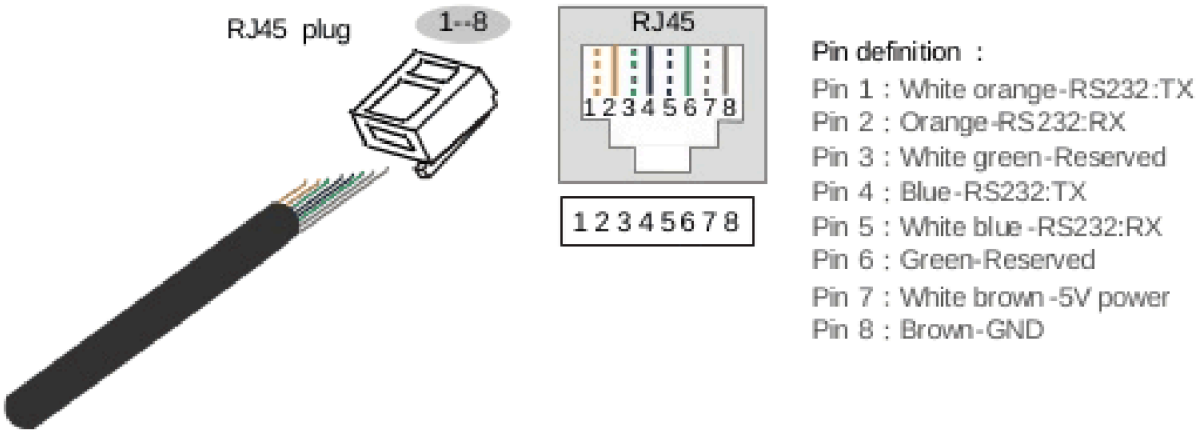

FIGURE 3-57 RS232 port pin definition

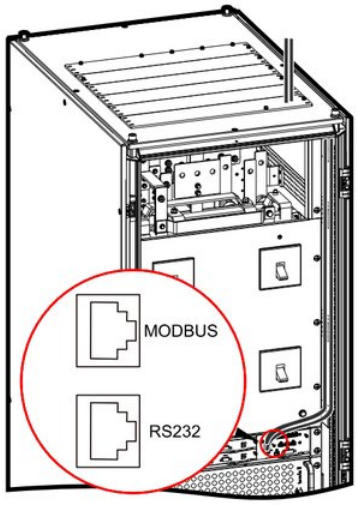

FIGURE 3-58 Connect communications wires

8 Close the front door.

9 Seal the wiring hole with sealing putty.

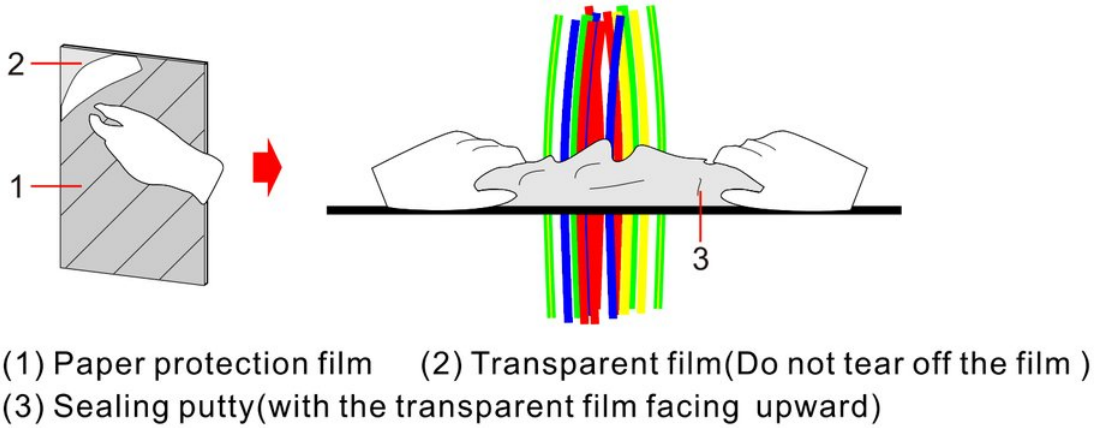

FIGURE 3-59 Sealing putty sealing diagram

> **NOTE**
> The recommended material for sealing putty is black flame retardant butyl rubber patch sealing putty.

IST6-400, IST6-500 WIRING

PROCEDURE

1. Use a key to open the front door of UPS.
2. Switch off the mains switch, output switch, bypass switch, and maintenance bypass switch on the front plate of cabinet.
3. Unscrew screws on the front plate, and remove the front plate.

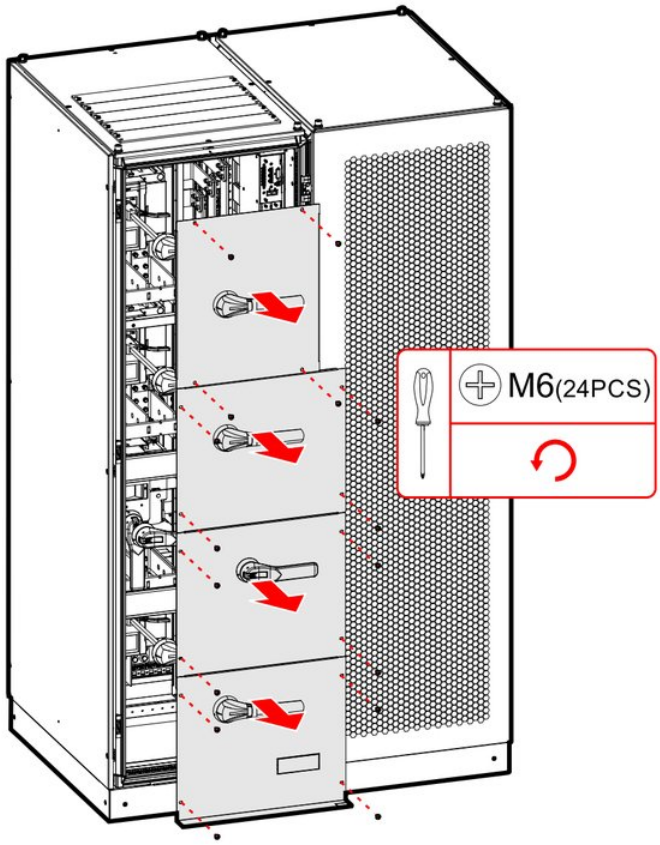

FIGURE 3-60 Dismantle the front plate

4. Crimp the DT terminal based on Figure 3-48.
5. Connect wires to the copper bar on UPS, and lock bolts.

- Connect the grounding wire. Connect the grounding copper bar to the equipotential coupling device on the site via grounding wires.

⚠ CAUTION

When installing UPS, it must be grounded first. When removing UPS, the grounding wire must be removed last.

- Connect the input and output wire.
- Connect the battery input wire.

⚠ CAUTION

- Battery positive and negative wires should be connected correctly and terminals connected firmly.

- Battery DC input requires to add a DC switch, the wiring is as shown in Figure 3-61.

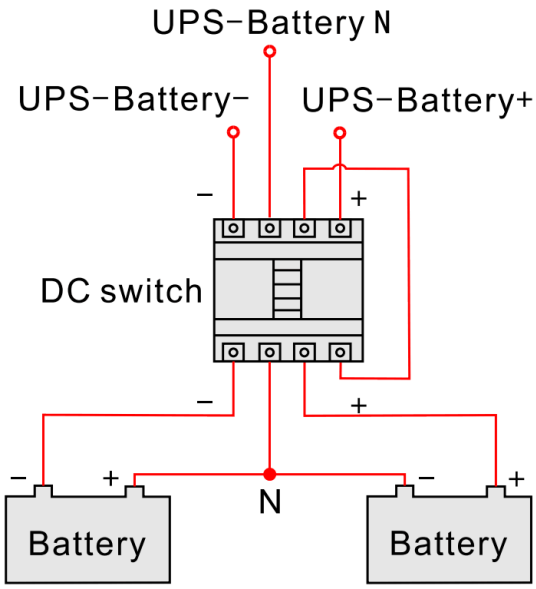

FIGURE 3-61 Battery wiring diagram

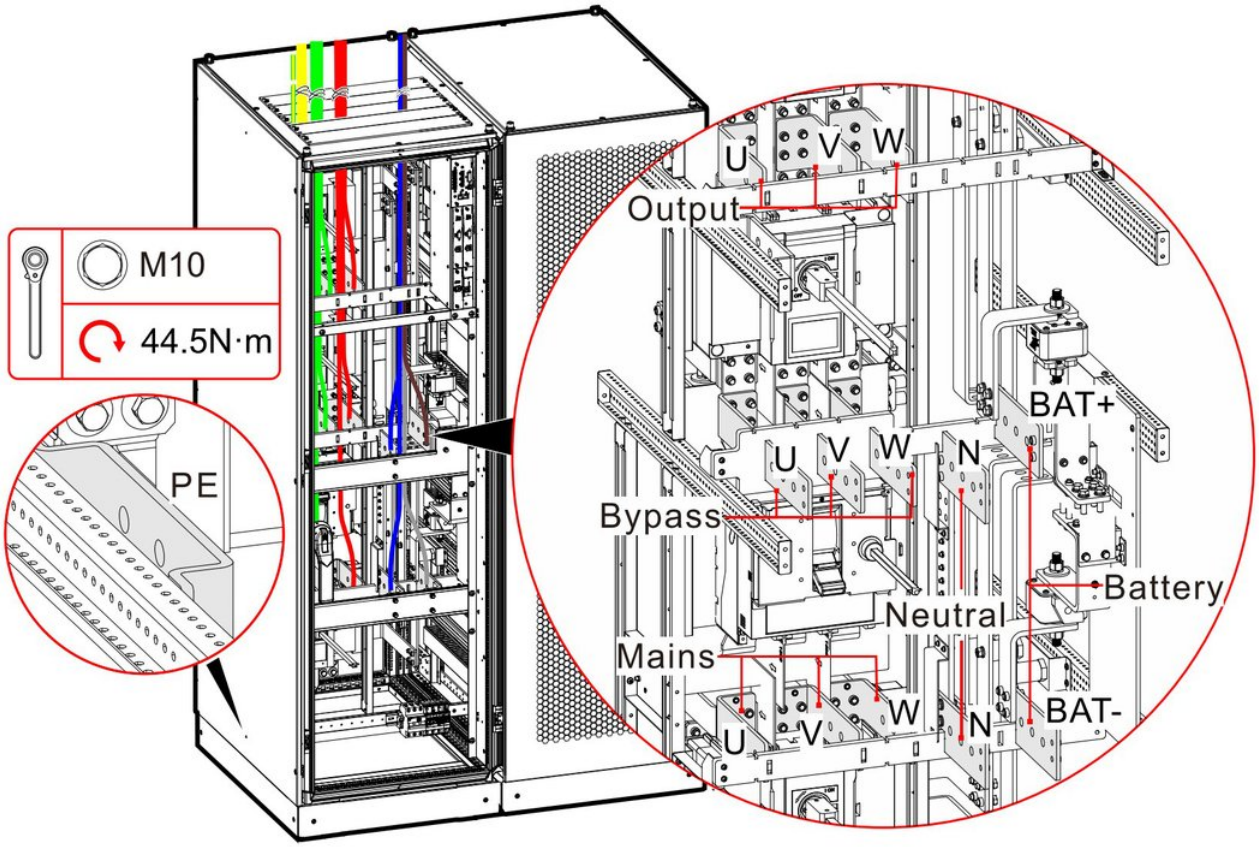

FIGURE 3-62 Wiring diagram (top wiring)

NOTE

1. To ensure good electrical performance, connect the U, V, and W wires to the same side of the copper bar. 2. When wiring, draw wires to the epoxy board wiring hole on the top of cabinet. 3. When wiring, dismantle the epoxy board to facilitate wiring. After completing wiring, reinstall the epoxy board.

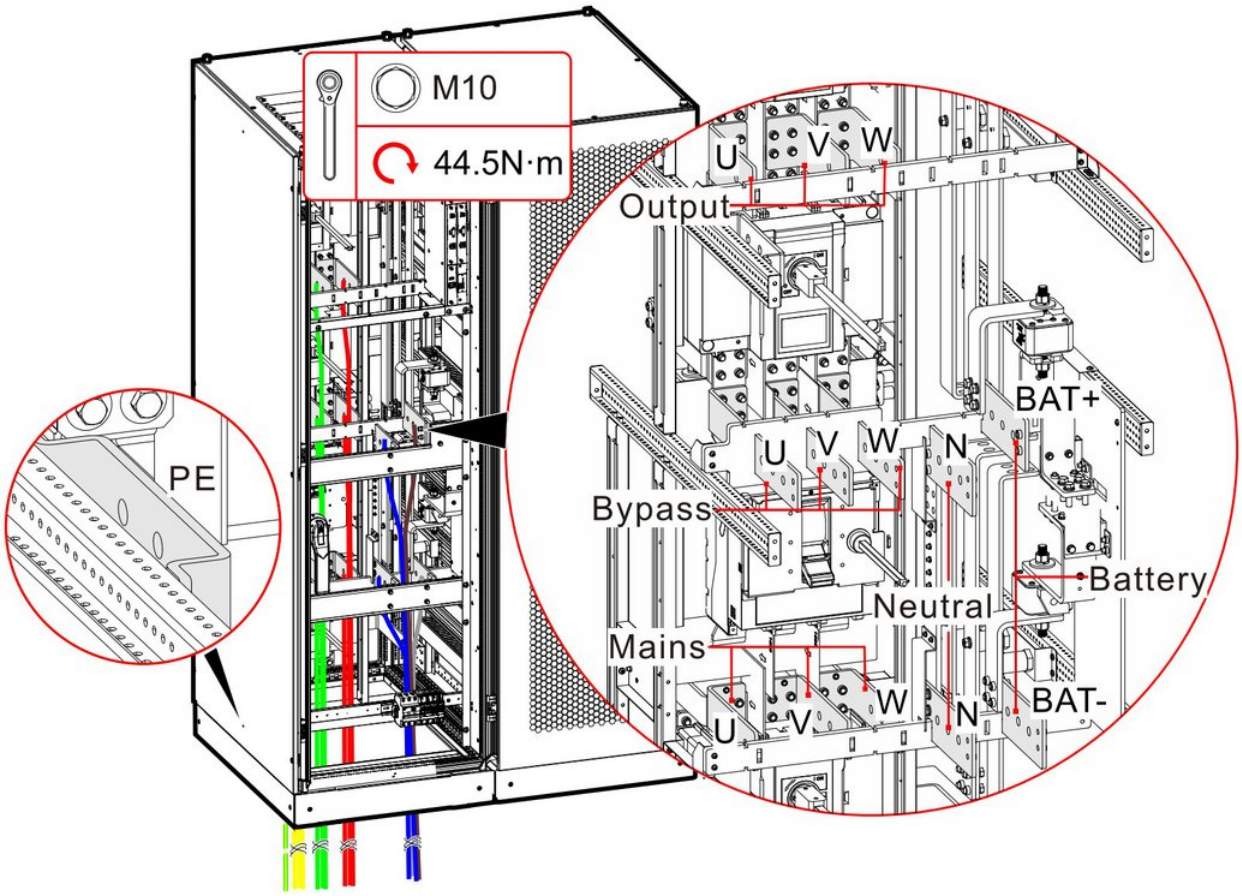

FIGURE 3-63 Wiring diagram (bottom wiring)

6 Fix wires to the epoxy plates via cable ties, and install the front plate.

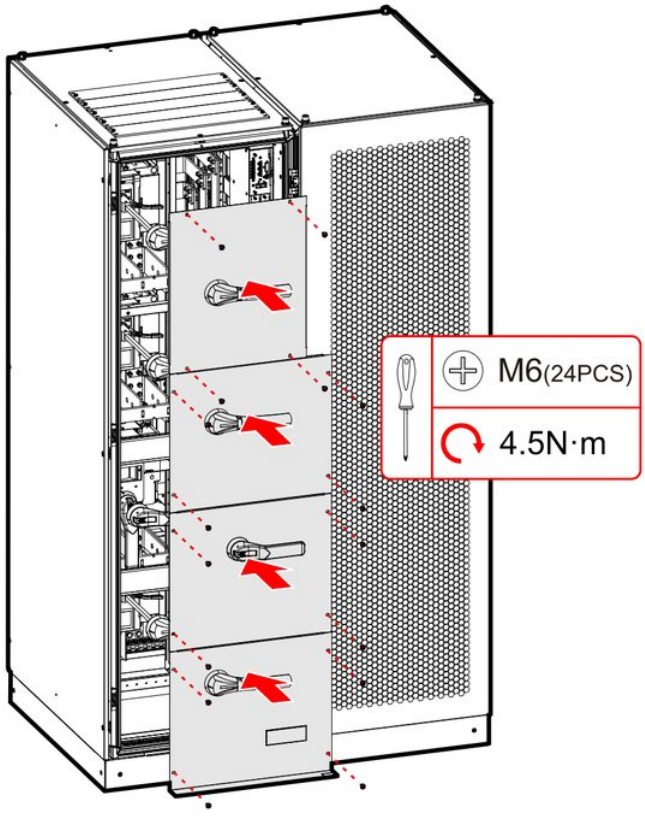

FIGURE 3-64 Install the front plate

7 Connect communication wires.

Both MODBUS port and RS232 port (pins definition as below) are connected via RJ45 plugs.

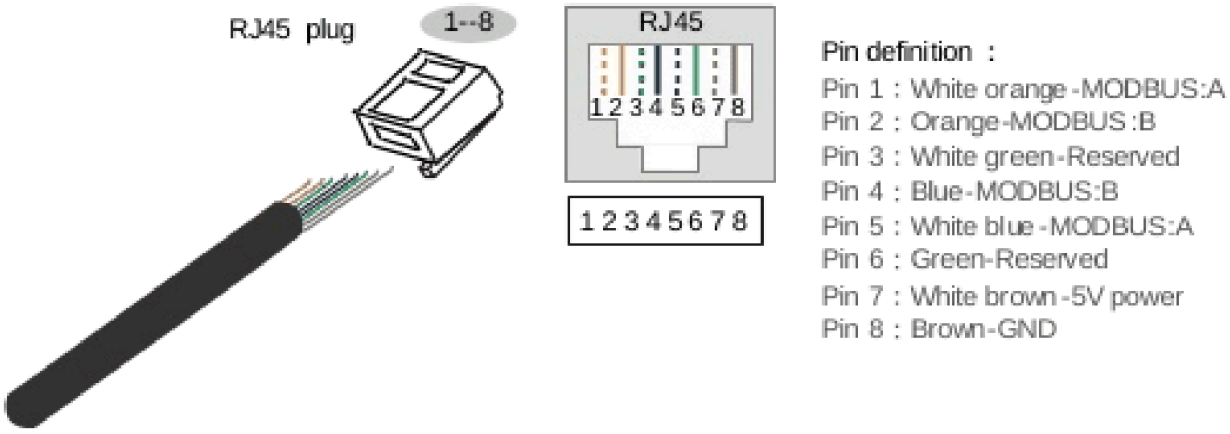

FIGURE 3-65 MODBUS port pin definition

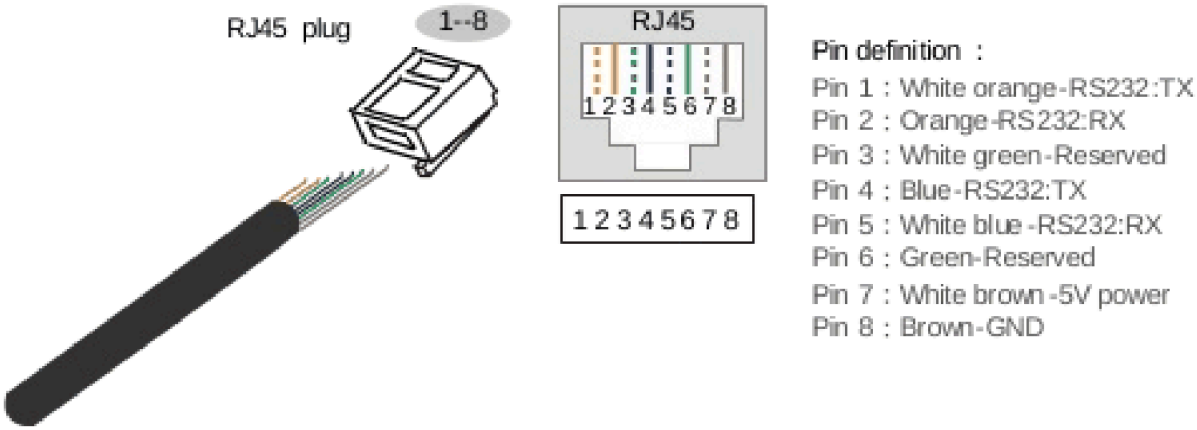

FIGURE 3-66 RS232 port pin definition

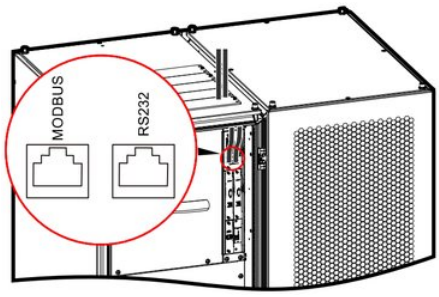

FIGURE 3-67 Connect communications wires (top wiring)

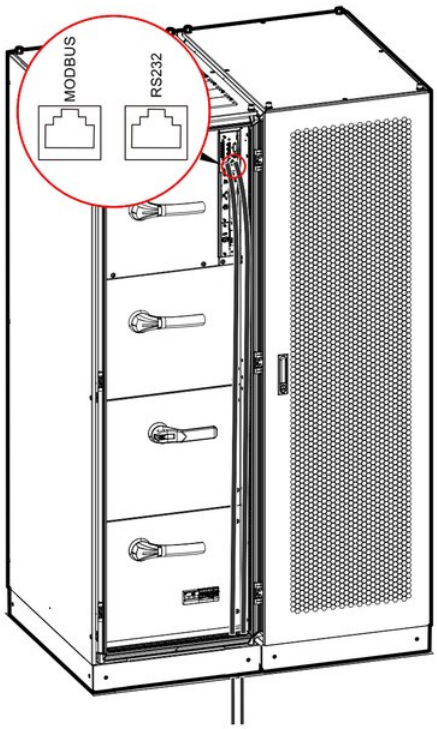

FIGURE 3-68 Connect communications wires (bottom wiring)

NOTE

If the bottom wiring is used, knock off the bottom plate at the bottom front plate, file the disconnected area with a file and then connect communications wires.

8. Close the front door.
9. Seal the wiring hole with sealing putty.

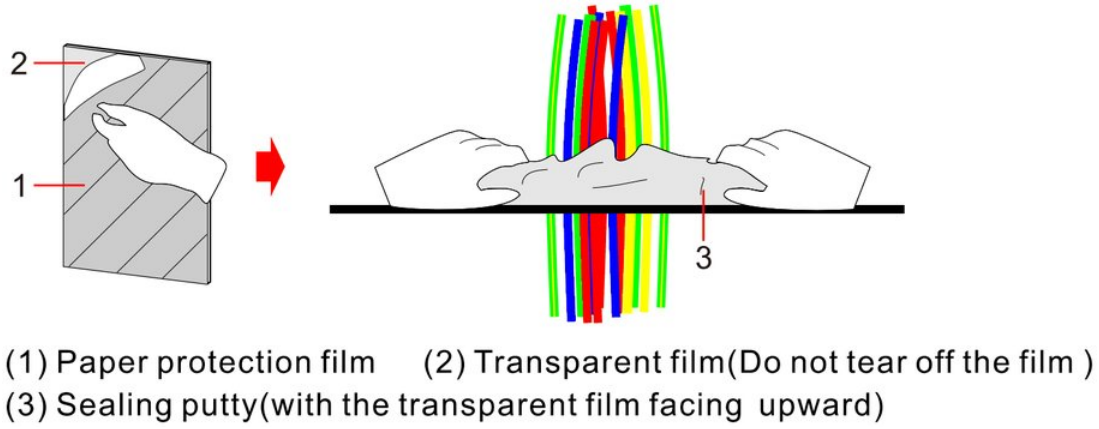

FIGURE 3-69 Sealing putty sealing diagram

NOTE

The recommended material for sealing putty is black flame retardant butyl rubber patch sealing putty.

3.7.3 Parallel System Conncetion

Install the battery pack and UPS in the parallel system independently, and then connect the parallel wires.

CAUTION

- The mains input phase sequence cannot be connected reversely, otherwise, UPS cannot run properly.
- The AC input connection method and phase sequence of UPS in the parallel system should be strictly consistent to ensure that the bypass power supply of the parallel system is in the same phase.
- Before powering on each UPS, check that the phases of the input three phases of UPS correspond one to one.

PROCEDURE

1. Perform **Steps 1**, **Step 2**, and **Step 3** in **3.7.2 UPS Connection**.
2. Connect the mains input of each UPS to the same grid.
3. Connect the bypass input of each UPS to the same grid.
4. Connect the output of each UPS to load or output distribution cabinet.

CAUTION

The length of bypass/output wires of parallel system to different machines should be basically symmetrical.

5. Connect the battery input of each UPS to the corresponding battery pack.
6. Connect the parallel ports of each UPS in the parallel system via parallel wires, and fasten the parallel port screws. For details, see **3.6.3 Parallel/BSC Kit Installation**.

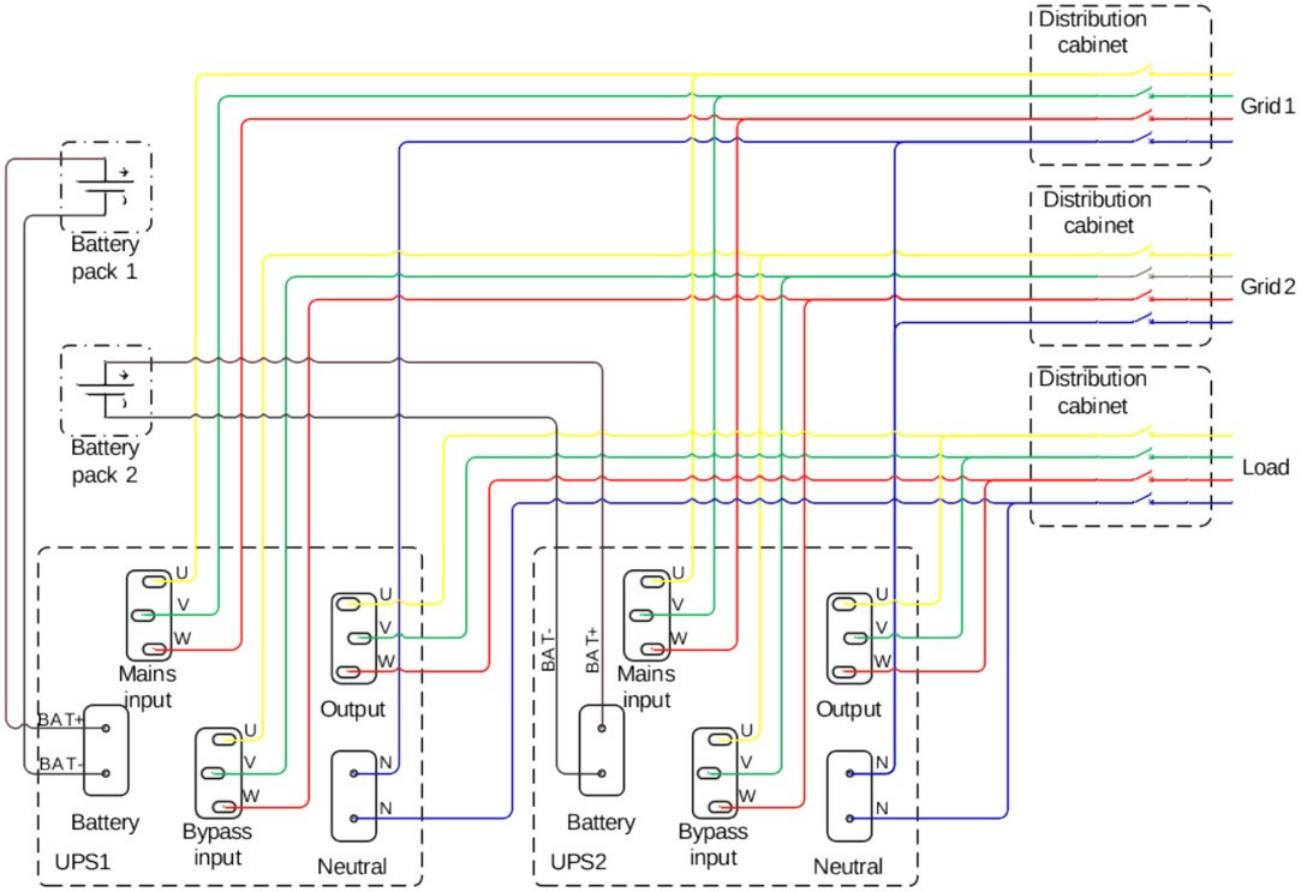

FIGURE 3-70 Parallel system wiring diagram

3.8 Verifying the Installation

No.	Item	Result
1	Check if the color of AC wires is in accordance with the specification.	Yes☐ No☐
2	Check if the UPS wiring is not loose.	Yes☐ No☐
3	Check if wires are stably connected.	Yes☐ No☐
4	Check if the cabinet grounding is good.	Yes☐ No☐
5	Check if there is a short circuit between the live wire and the live wire, or between the live wire and the neutral wire, or between the live wire and the grounding wire in the UPS input. And also check if there is a short circuit in the UPS output.	Yes☐ No☐
6	Check if the polarity and sequence of battery wires are correct.	Yes☐ No☐
7	Check if the labels on wires are correct.	Yes☐ No☐
8	Check if the wiring is neat and if the wiring binding is in accordance with the technical specifications	Yes☐ No☐
9	Check if the installation and wiring of the device are conducive to future system renovation, expansion, and maintenance.	Yes☐ No☐
10	Check if there are foreign bodies in the cabinet, such as behind the module, on the top of the cabinet, terminals, and switches.	Yes☐ No☐
11	Check if the cabinet is installed stably and firmly.	Yes☐ No☐

CHAPTER 4

04 Operation Guide

IN THIS CHAPTER

4.1 Single UPS Operation
4.2 Parallel System Operation
4.3 BSC System Operation

4.1 Single UPS Operation

4.1.1 Check Before Power-on

TABLE 4-1 Check before power-on

No.	Check item	Check result
1	The mains switch, bypass switch, output switch, and maintenance bypass switch of UPS are off. The external battery switch is off.	Normal Abnormal
2	Check the load type, state and capacity. • Ensure that the load is not an inductive load. The UPS output must not be connected to inductive loads, such as motor, fan, air-conditioner, which is directly powered by grid. • Ensure that the load is switched off. At the same time, the load capacity should not exceed the rated output capacity of UPS, otherwise it will cause the system overload protection.	Normal Abnormal
3	There is no short circuit between the live wire and the neutral wire, or between the live wire and the grounding wire in the UPS input. Ensure that there is no short circuit in the UPS output.	Normal Abnormal
4	Measure the AC voltage on the mains input terminals of UPS via a multimeter. The voltage must be in the range of 187V to 280V, otherwise UPS can only be started by battery.	Normal Abnormal
5	Measure the frequency on the mains input terminals of UPS via a multimeter. The frequency must be in the range of 40Hz~60Hz (50Hz system) or 50Hz~70Hz (60Hz system), otherwise UPS can only be started by battery.	Normal Abnormal
6	Measure the DC voltage on the battery input terminals of UPS via a multimeter. The positive battery pack voltage must be greater than a certain value (+11.5 × 12V number of batteries), and the negative battery pack voltage must be less than a certain value (-11.5 × 12V number of batteries). Pay attention to the battery polarity to prevent incorrect battery wiring.	Normal Abnormal
No.	**Check item**	**Check result**
7	The battery switch auxiliary contact has been connected to one of the input dry contacts of the system monitoring card as required, and the "Input dry contact" item has been set in "Setting manage >Dry Contact>Input" on the touch screen.	Normal Abnormal

4.1.2 Start UPS

PROCEDURE

1. Place the ready switches of the bypass module and all power modules in state.
2. Switch on the bypass switch, mains switch, and external battery switch of UPS one by one to output in bypass mode. (If the battery is cold start, this step only needs to switch on the external battery switch, and then press the battery prestart button on the UPS for more than 3s, and the UPS power is established.)

After UPS is powered on, the touch screen starts to run. After entering the power-on password, the main page is displayed.

3. Tap the icon in the main page of the touch screen to check if there are any fault alarms on the system. If yes, stop the operation and contact AEC technical support for on-site assistance until all fault alarms are cleared.
4. Power on inverter.

Wait for the run indicators of all power modules are green on and flashing slowly, perform the inverter power-on operation.

- Power-on method 1: **ON** combination button on the operation panel

Press the **ON** combination button on the operation panel for 3s.

- Power-on method 2: Touch screen

In the main page, tap the icon to enter the inverter power-on page, and then tap **OK** button.

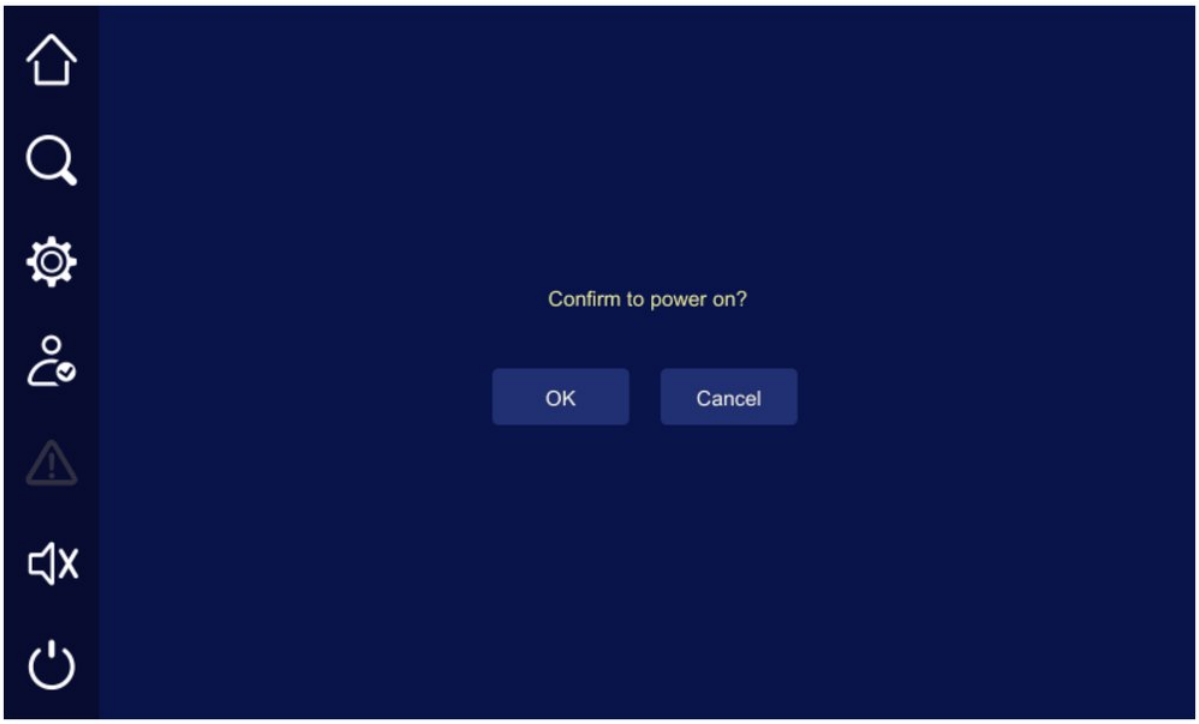

FIGURE 4-1 Inverter power-on page

The inverter indicator on the operation panel is green on. About 10s later, the inverter startup is completed, the bypass indicator on the operation panel is off, and the system switches from bypass mode to inverter mode.

5. After the inverter is powered on, check if the system switches to the inverter mode in the main page of the touch panel. During commissioning, tap the icon in the main page of the touch panel to check if the three-phase output voltage and frequency of UPS are normal.
6. Switch on the output switch, measure the output three-phase voltage via a multimeter to check if the inverter output voltage (three-phase output voltage = system voltage ± 2V) and inverter output frequency (three-phase output frequency = system frequency ± 0.1Hz) are normal.
7. Start load. Generally, start large power load first, then small power load.

4.1.3 Shut Down UPS

CAUTION

If the bypass is normal, the system will turn to the bypass mode after the inverter powers off. If the bypass is abnormal, system will have no output after the inverter powers off. Before powering off inverter, please ensure that the load is switched off and can withstand the power failure at any time.

PROCEDURE

1. Switch off the user load.
2. Power off inverter.

- Power-off method 1: **OFF** combination button on the operation panel

Press the **OFF** combination button on the operation panel for 3s.

- Power-off method 2: Touch screen

In the main page, tap the icon to enter the inverter power-off page, and then tap the **OK** button.

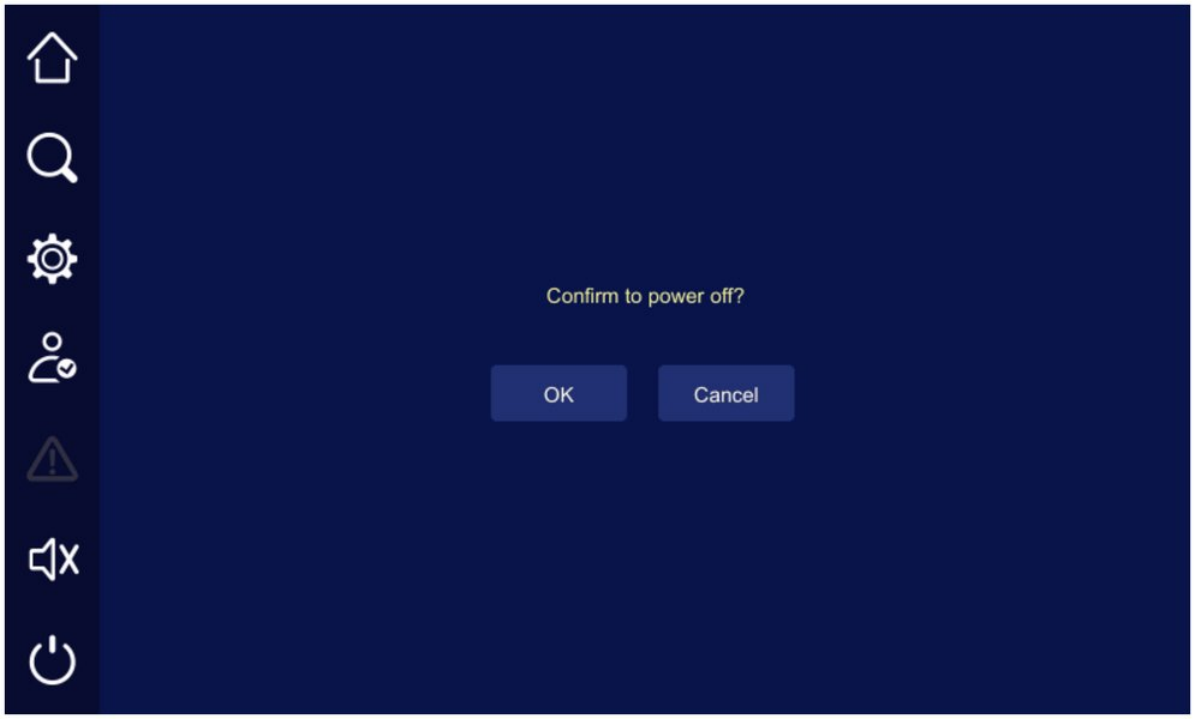

FIGURE 4-2 Inverter power-off page

The inverter indicator on the operation panel is off, and the bypass indicator on the operation panel is green on, and the system switches from inverter mode to bypass mode.

3. After the inverter is powered off, if the bypass is normal, the system will turn to the bypass mode after the inverter powers off. If the bypass is abnormal, system will have no output after the inverter powers off, which will cause load failure.
4. Switch off the external battery switch, mains switch, bypass switch and output switch of UPS one by one.
5. Wait until the touch screen and LED indicators on the operation panel are off, and UPS shuts down completely.

4.1.4 Performing EPO

CAUTION

Do not perform EPO operation unless it is an emergency.

Short-circuit NO and COM of EPO1 or disconnect NC from COM of EPO2 (for details about EPO2 trigger operations, see Table 2-7 **System monitoring card description**) to trigger the system EPO, and UPS enters the emergency power off state. At this time, the touch screen displays EPO protection, and the buzzer keeps beeping.

CAUTION

- After EPO is triggered, UPS has no output, which will cause load failure.
- When the system is in maintenance bypass mode, UPS still has output after the EPO is triggered.

4.1.5 Clear the EPO State

PROCEDURE

1. Check if the dry contact EPO1/EPO2 on the system monitoring card is in a non-emergency power off state.
2. Switch off the external battery switch, mains switch, bypass switch and output switch of UPS one by one. Wait until the touch screen and LED indicators on the operation panel are off, and UPS shuts down completely.
3. Refer to **4.1.2 Start UPS** to restart UPS, and the EPO is removed.

4.2 Parallel System Operation

4.2.1 Check Before Power-on

TABLE 4-2 Check before power-on

No.	Check item	Check result
1	The mains switch, bypass switch, output switch, and maintenance bypass switch of each UPS are off. All external battery switches are	Normal Abnormal
No.	**Check item**	**Check result**
	off.	
2	Check the load type, state and capacity. • Ensure that the load is not an inductive load. Each UPS output must not be connected to inductive loads, such as motor, fan, air-conditioner, which is directly powered by grid. • Ensure that the load is off (i.e. the external load total output switch is off). At the same time, the load capacity should not exceed the rated output capacity of each UPS, otherwise it will cause the system overload protection.	Normal Abnormal
3	There is no short circuit between the live wire and the neutral wire, or between the live wire and the grounding wire in each UPS input. Ensure that there is no short circuit in each UPS output.	Normal Abnormal
4	Measure the AC voltage on the mains input terminals of each UPS via a multimeter. The voltage must be in the range of 187V to 280V, otherwise each UPS can only be started by battery.	Normal Abnormal
5	Measure the frequency on the mains input terminals of each UPS via a multimeter. The frequency must be in the range of 40Hz~60Hz (50Hz system) or 50Hz~70Hz (60Hz system), otherwise each UPS can only be started by battery.	Normal Abnormal
6	Measure the DC voltage on the battery input terminals of each UPS via a multimeter. The positive battery pack voltage must be greater than a certain value (+11.5 × 12V number of batteries), and the negative battery pack voltage must be less than a certain value (- 11.5 x 12V number of batteries). Pay attention to the battery polarity to prevent incorrect battery wiring. If there are multiple batteries, measure the voltage at the switch of each battery pack via multimeter, and then measure the total switch voltage between the battery pack and UPS.	Normal Abnormal
7	The battery switch auxiliary contact has been connected to one of the input dry contacts of the system monitoring card of each UPS as required, and the "Input dry contact" item has been set in "Setting manage >Dry Contact>Input" on the touch screen.	Normal Abnormal

4.2.2 Start Parallel System

PROCEDURE

1. Check the parallel wires are connected based on **3.6.3 Parallel/BSC Kit Installation**.
2. Place the ready switches of the bypass module and all power modules in state. Switch on the mains switch and bypass switch of each UPS one by one.

After each UPS is powered on, the touch screen starts to run. After entering the power-on password, the main page is displayed.

3. Tap the icon in the main page of the touch screen, set "Parallel mode" in "Cabinet setting> Mode manage" of each UPS to "Parallel". Then select any UPS and set "Parallel address" to 1, select another UPS and set "Parallel address" to 2, and so on. Until each UPS in the parallel system has a number.

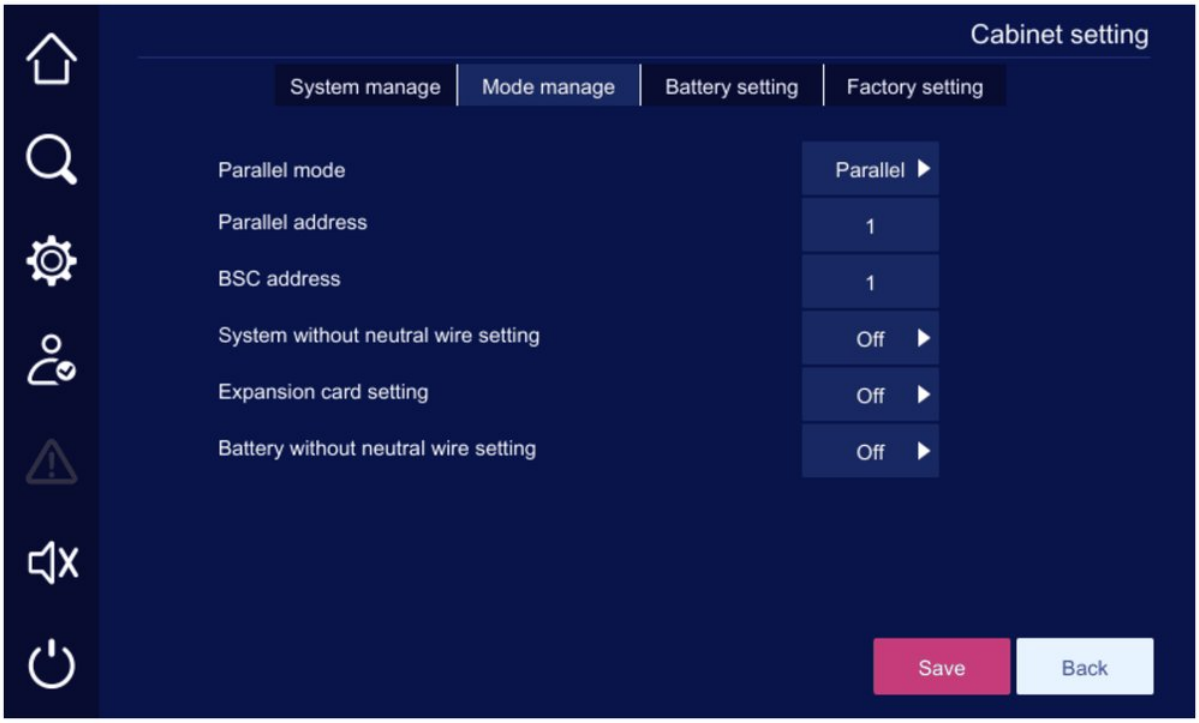

FIGURE 4-3 Parallel mode and parallel address setting

4. Switch on the external battery switch of each UPS (If there are multiple batteries, switch on the switch of each battery pack first, and then switch on the total switch between the battery pack and UPS.) Check if the battery is connected properly (The "Battery circuit abnormal" alarm disappears in the main page of the touch screen within 2 minutes.).
5. Tap the icon in the main page of the touch screen of each UPS to check if there are any fault alarms on the system. If yes, stop the operation and contact AEC technical support for on-site assistance until all fault alarms are cleared.
6. Power on inverter of each UPS.

When the each UPSs are all in the bypass mode and UPS has no alarm, perform the inverter power-on operation of each UPS (see the **Step 4** of **4.1.2 Start UPS**), and the all UPSs switch from bypass mode to inverter mode.

⚠ CAUTION

Do not directly switch on the output switches of each UPS. Keep all output switches off and perform the following operations to prevent circulation damage to UPS caused by output voltage deviation.

7. Measure the output voltage and frequency of each UPS.

- After the inverters of each UPS are powered on, check if the system switches to the

inverter mode in the main page of the touch panel. During commissioning, tap the  icon in the main page of the touch panel to check if the three-phase output voltage and frequency of each UPS are normal.

- Measure the output three-phase voltage via a multimeter to check if the inverter output voltage (three-phase output voltage = system voltage ± 2V) and inverter output frequency (three-phase output frequency = system frequency ± 0.1Hz) are normal. And record the RMS value of the three-phase output voltage of each UPS tested via a multimeter.

8 Compare the output voltage of each UPS. Ensure the RMS value difference of three-phase voltage of any two UPSs is less than 5V before the two UPSs work in parallel. If the conditions are not met, UPS with large voltage deviation cannot be paralleled into the system, commission that UPS again on its own (consult AEC technical support).

9 Power off inverter of each UPS (see the **Step2** of **4.1.3 Shut Down UPS**), and each UPS switches from inverter mode to bypass mode.

10 Check the bypass phase sequence.

1. Switch on the output switch of UPS with parallel address 1 and keep the output switch of other UPSs off (Ensure that the total output switch of the external load is off. Otherwise, when the output switch of UPS with parallel address 1 is switched off, and it will supply power to load.).
2. Set the multimeter to AC voltage, connect one pen to the front U of output switch of UPS with parallel address 2, and connect the other pen to the rear U of output switch of UPS with parallel address 2, measure the voltage difference between the front and rear of output switch of UPS with parallel address 2, and test the V and W of output switch of UPS with parallel address 2 in the same way. If the phase sequence is correct, the voltage difference of each phase is less than 5V. If the phase sequence is incorrect, there is at least one phase with a voltage difference greater than 5V.
3. Check whether the bypass phase sequence of each UPS in parallel system is correct based on the above method (When check the phase sequence of each UPS, there is no need to operate the switch again, keep the output switch of UPS with parallel address 1 on, and the output switches of other UPSs off).
4. If the bypass phase sequence of each UPS is correct, perform the next step. If the phase sequence of any UPS is incorrect, power down system, and check if the bypass input and output wires of each UPS are connected correctly.

11 Switch on the output switches of each UPS.

When there has no alarm for each UPS, switch on the output switches of each UPS one by one to ensure that all UPS outputs are in parallel.

12 Power on the inverters of each UPS.

When each UPS is in the bypass mode and there has no alarm for each UPS, power on the inverters of each UPS (see the **Step4** of **4.1.2 Start UPS**), and each UPS switches from bypass mode to inverter mode.

13 Power off the inverters of each UPS (see the **Step2** of **4.1.3 Shut Down UPS**), and each UPS switches from inverter mode to bypass mode.

14 Switch on the total output switch of the external load.

When the parallel system switches to bypass mode, switch on the total output switch of the external load, system bypass supplies power for load.

15 Power on the inverters of each UPS.

When each UPS is in the bypass mode and there has no alarm for each UPS, power on the inverters of each UPS (see the **Step4** of **4.1.2 Start UPS**), and each UPS switches from bypass mode to inverter mode.

4.2.3 Shut Down Parallel System

CAUTION

If the bypass is normal, the system will turn to the bypass mode after the inverter powers off. If the bypass is abnormal, system will have no output after the inverter powers off. Before powering off inverter, please ensure that the load is switched off and can withstand the power failure at any time.

PROCEDURE

1. Switch off all loads in parallel system, and keep the parallel system running without load for a while for heat dissipation.
2. Power off the inverters of each UPS (see the **Step2** of **4.1.3 Shut Down UPS**), and each UPS switches from inverter mode to bypass mode.
3. Switch off the external battery switch, mains switches, bypass switches, total output switch of the external load, and output switches of each UPS one by one.
4. Wait until the touch screen and LED indicators on the operation panel are off, and the parallel system shuts down completely.

NOTE

- If only an inverter needs to be powered off, system switches to bypass mode, and the load is powered on, only perform **Step 2.**
- If the parallel system needs to be shut down completely, perform the complete operations above.
- If it needs to exit the parallel mode, please power off the inverters, system switched to bypass mode, and disconnect the parallel wires.

4.2.4 Performing EPO

CAUTION

Do not perform EPO operation unless it is an emergency.

EPO trigger method sees **4.1.4 Performing EPO**.

NOTE

Set "EPO linkage" in "Setting manage > Smart mode > Other modes" on the touch screen. When the "EPO linkage" is set to "On", if any UPS EPO is triggered, the parallel system will be shut down and all outputs will be turned off. When the "EPO linkage" is set to "Off", if any UPS EPO is triggered, only the output of this UPS will be turned off. This function is set by AEC technical support.

4.2.5 Clear the EPO State

PROCEDURE

1. Check if the dry contacts EPO1/EPO2 on all system monitoring cards of parallel system are in a non-emergency power off state.
2. Switch off the external battery switch, mains switch, bypass switch and output switch of each UPS one by one. Wait until all touch screens and LED indicators on the operation panel are off, and all UPSs shut down completely.
3. Refer to **4.2.2 Start Parallel System** to restart parallel system, and the EPO is removed.

4.3 BSC System Operation

BSC system operation and parallel system operation are the same except for BSC system setting, see **4.2 Parallel System Operation**.

> **NOTE**
>
> BSC system setting: Tap the  icon in the main page of the touch screen, set "Parallel mode" in "Cabinet setting> Mode manage" of each UPS to "BSC". Then select any UPS and set "BSC address" to 1, select another UPS and set "Parallel address" to 2, and so on. Until each UPS in the BSC system has a number.

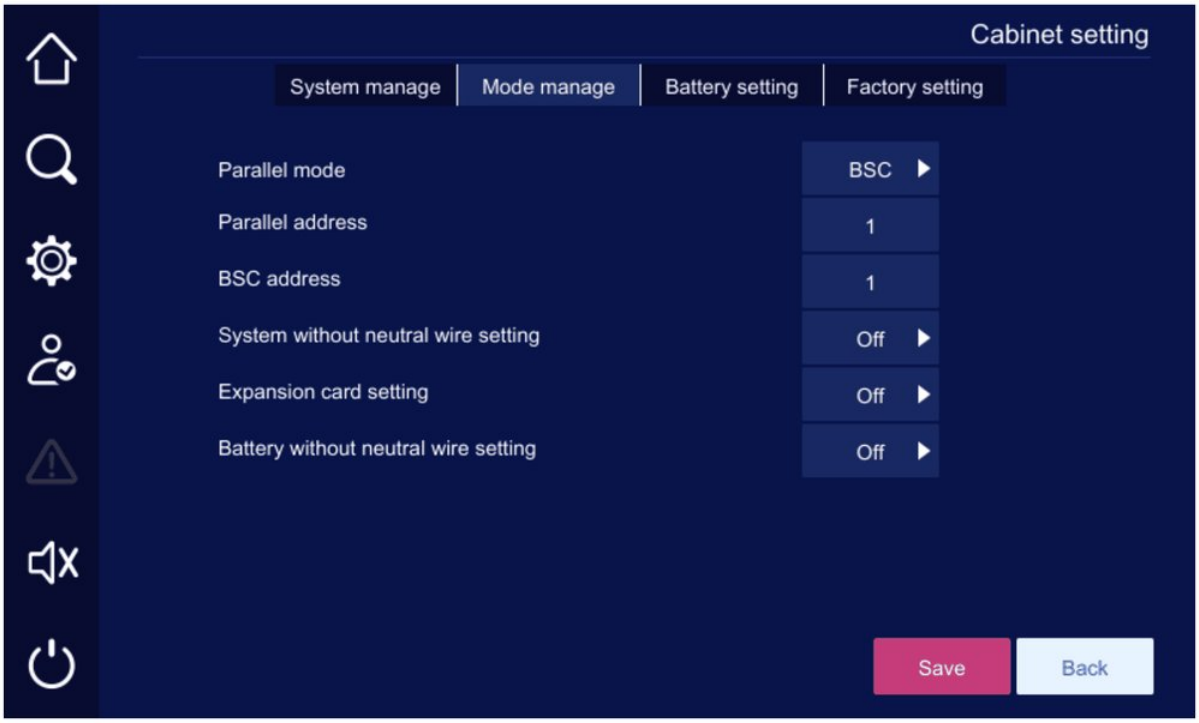

FIGURE 4-4 BSC system setting

CHAPTER 5

05 Touch Screen Operation

IN THIS CHAPTER

5.1 Menu Hierarchy
5.2 Main Page
5.3 System Working State
5.4 Buzzer Control
5.5 Main page
5.6 Info Manage
5.7 Setting Manage
5.8 Inverter ON/OFF

NOTE

The parameter values and other details in the pictures in this chapter are for illustration only. The actual parameters are subject to the touch screen display of the received product.

5.1 Menu Hierarchy

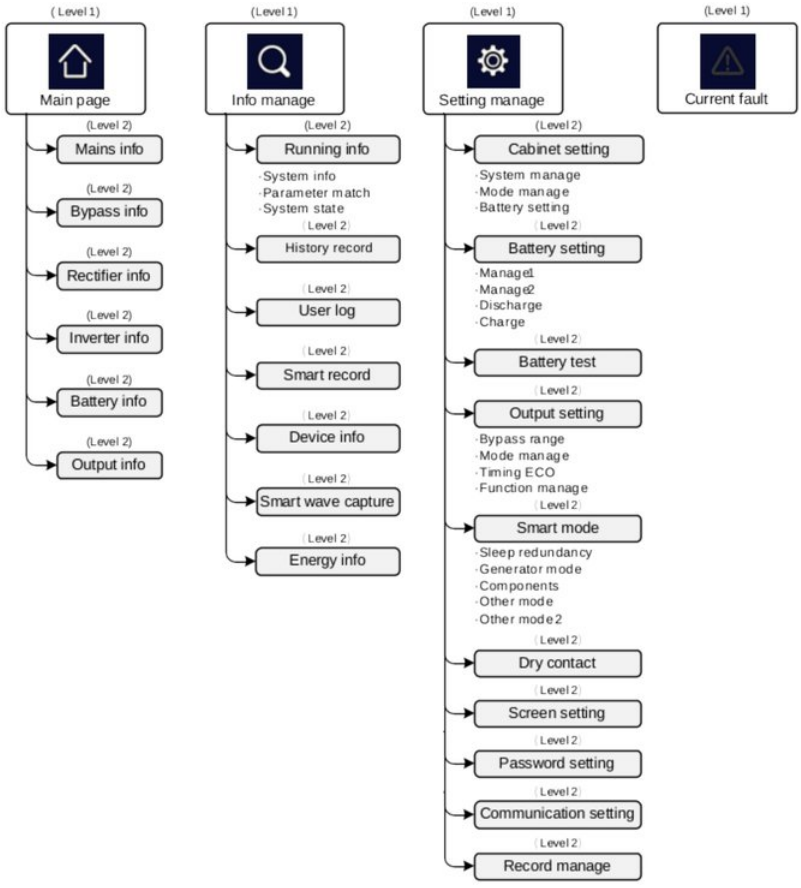

FIGURE 5-1 Menu hierarchy of touch screen

WARNING

The touch screen contains parameters related to the operation of the equipment. All settings such as parameters modification must be done by a specified professional. For any parameter that is unclear, refer to this manual or consult AEC technical support; do not change parameters without permission.

Panel, indicators and touch screen: quick guide

The inverter is started and stopped with the ON and OFF button pairs (both buttons held together for 3 s) or from the ON/OFF page of the touch screen. The status lamp shows the state from across the room.

AT A GLANCE **Status indicator**

Blue	Blue, flashing	Yellow	Red
UPS working normally	Battery mode	Alarm: the UPS is still operating	Fault: the UPS is not operating

QUICK GUIDE **Start the UPS** Section 4.1.2

1. **Ready switches** — Set the ready switches of the bypass module and of every power module to the ready position
2. **Switches** — Bypass, then mains, then external battery switch: the UPS starts on bypass
3. **Alarms** — Enter the user password and check on the main page that no fault alarm is shown
4. **Indicators** — Wait until the run indicators of all power modules flash green slowly
5. **ON + ON** (3 s) — Press the ON button pair, or tap the ON/OFF icon and confirm
6. **OUTPUT** — Switch on the output switch, check the output voltage, then the loads, largest first

QUICK GUIDE **Shut down** Section 4.1.3

1. **Loads off** — Switch off the load
2. **OFF + OFF** (3 s) — Press the OFF button pair, or tap the ON/OFF icon and confirm: the UPS goes to bypass
3. **Switches** — Battery, mains, bypass, then output switch off
4. **Indicators** — Wait until the touch screen and all indicators are off

QUICK GUIDE **Cold start from the battery** Section 4.1.2

1. **Battery switch** — Switch on only the external battery switch
2. **Cold start** (> 3 s) — Press and hold the battery cold-start button on the UPS

QUICK GUIDE **Mute the buzzer** Section 5.4

1



Tap the buzzer icon on the menu bar to mute or unmute

A new fault after muting turns the buzzer on again.

5.2 Main Page

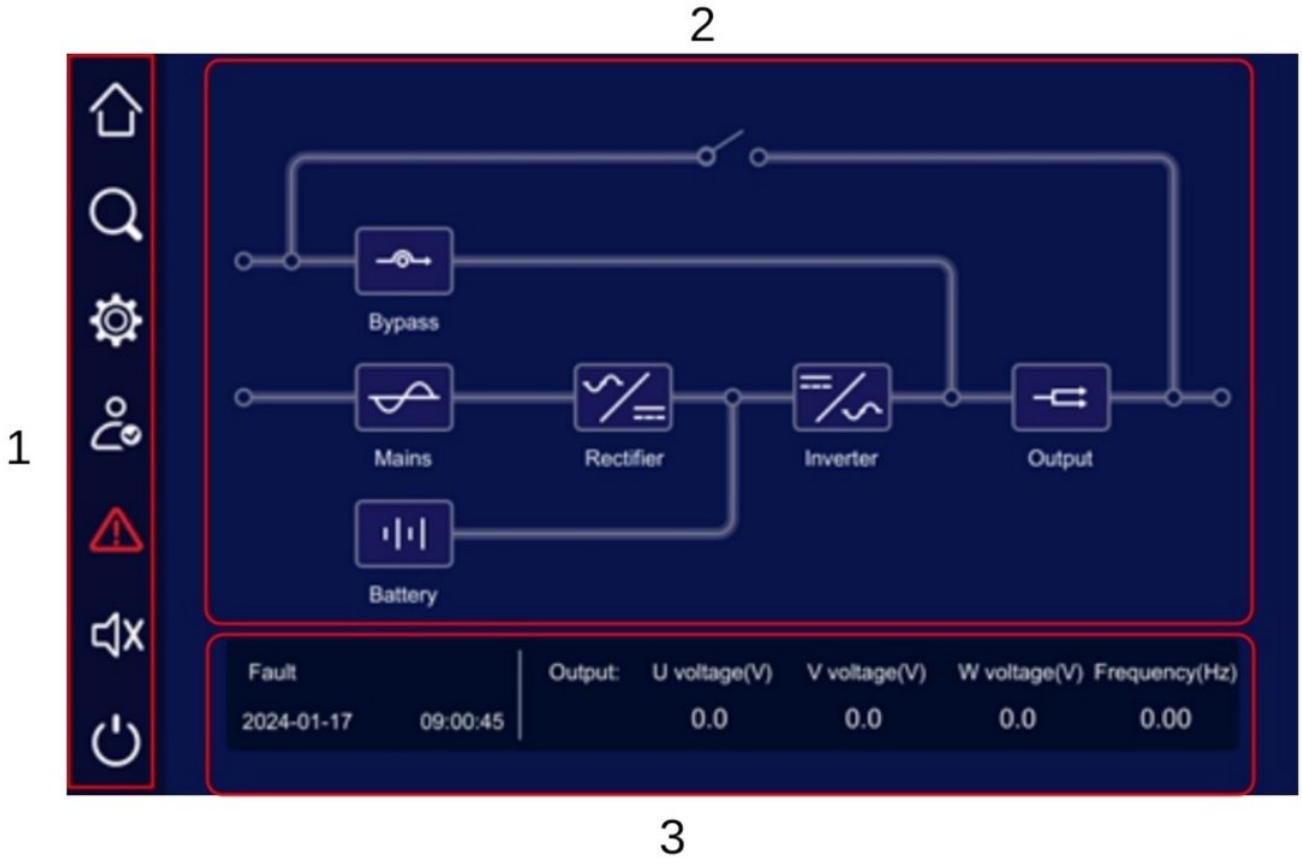

FIGURE 5-2 Main page

TABLE 5-1 Function area description

No.	Area	Description
1	Menu bar	Include main page, info manage, setting manage and current fault, etc.
2	Main page	Display UPS current running state and info.
3	State bar	Include UPS stat, date and time, output info, etc.

TABLE 5-2 Menu bar icon description

Icon	Meaning
	Home page
	Info manage
	Setting manage
	User login
	Current fault
	Buzzer switch
	Inverter ON/OFF

TABLE 5-3 Main page icon description

Icon	Meaning	Description
	Bypass info	 When the bypass input is abnormal, this icon flashes and displays as.
	Mains info	 When the mains input is abnormal, this icon flashes and displays as.
	Rectifier info	Tap it to view the rectifier information of each module.
	Inverter info	Tap it to view the inverter information of each module.
	Battery info	 When the battery is abnormal, this icon flashes and displays as.
	Output info	 When output is abnormal, this icon flashes and displays as.

TABLE 5-4 State bar icon description

Icon	Description
	Display the current UPS state.
	Display the date and time.
	Display output info.

5.3 System Working State

The system working state includes fault protection, OFF, bypass output, inverter output, grid- tied self-load mode, ECO output, WECO output, frequency converter output, and maintenance bypass output.

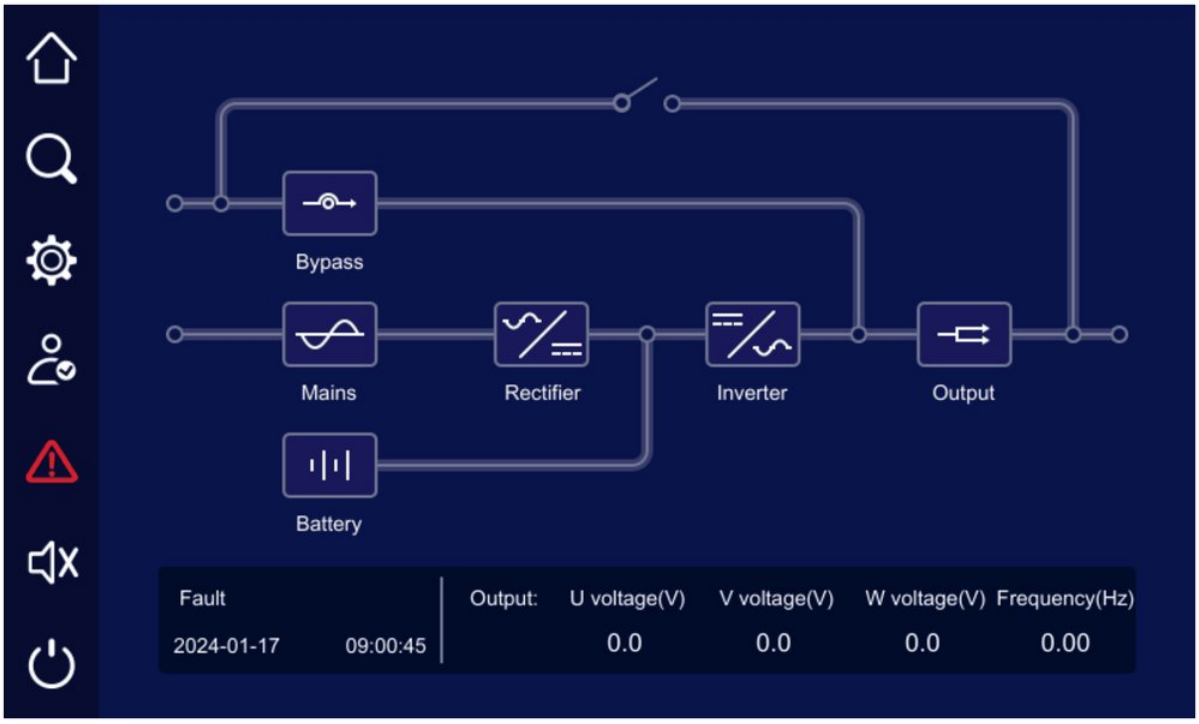

FIGURE 5-3 Fault protection, no output

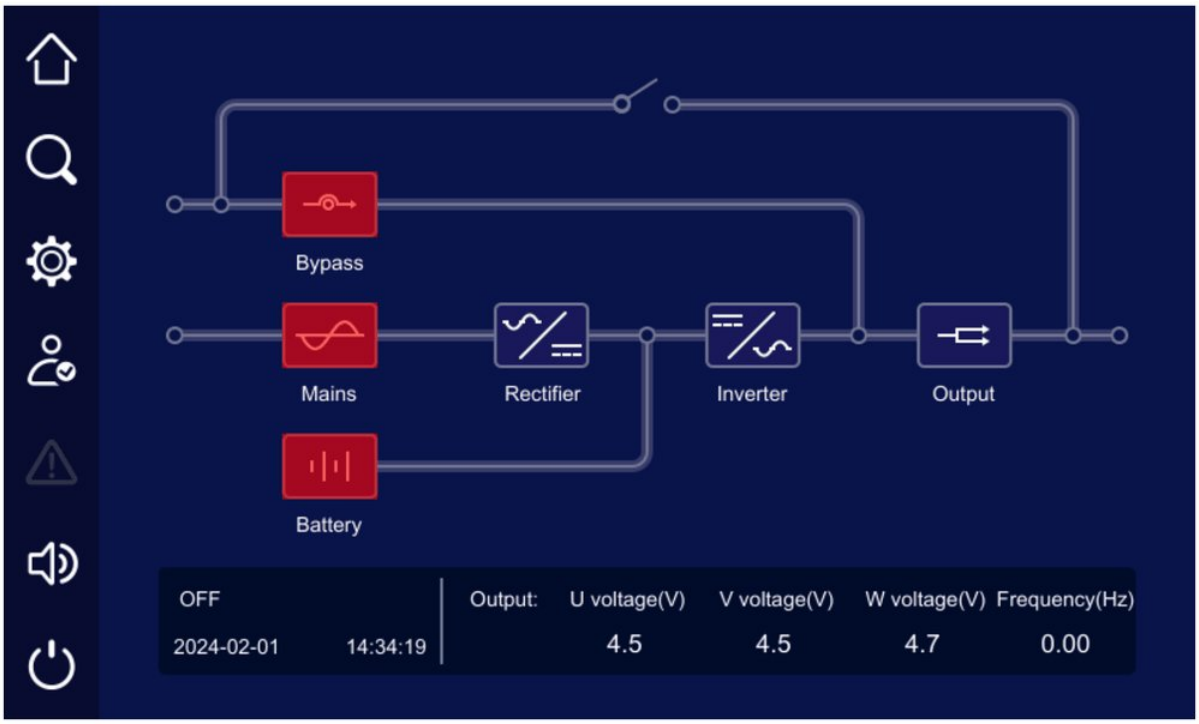

FIGURE 5-4 OFF

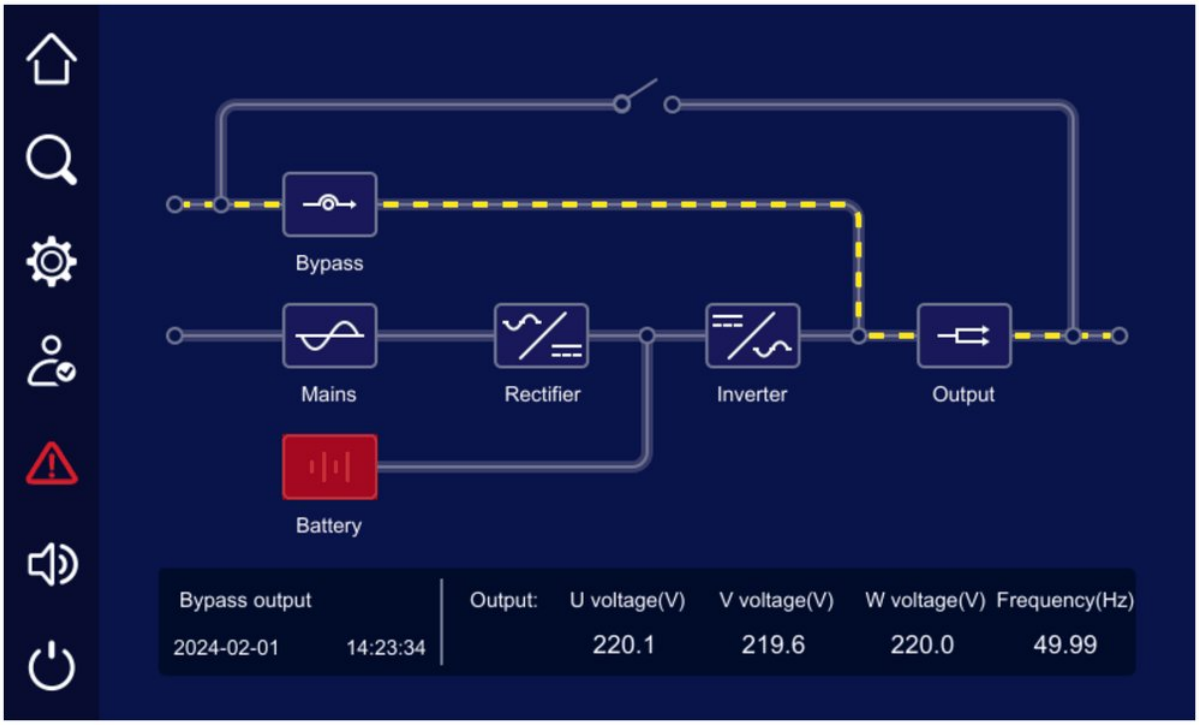

FIGURE 5-5 Bypass output

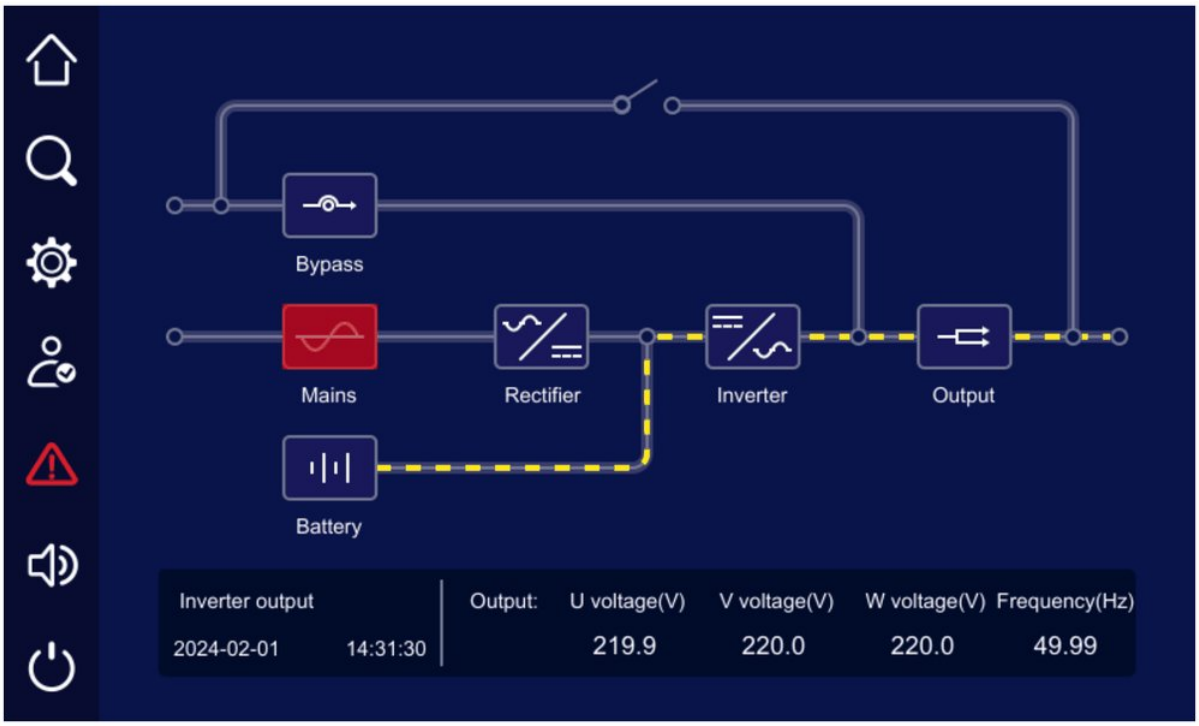

FIGURE 5-6 Battery inverter output

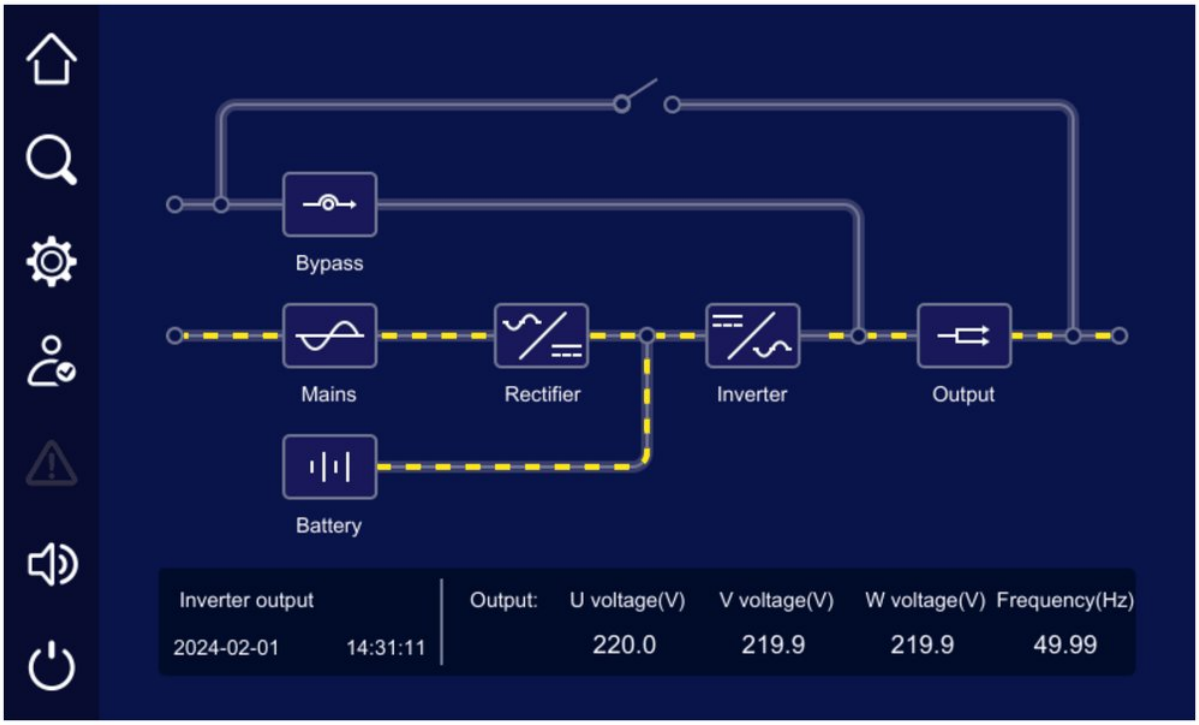

FIGURE 5-7 Mains inverter output

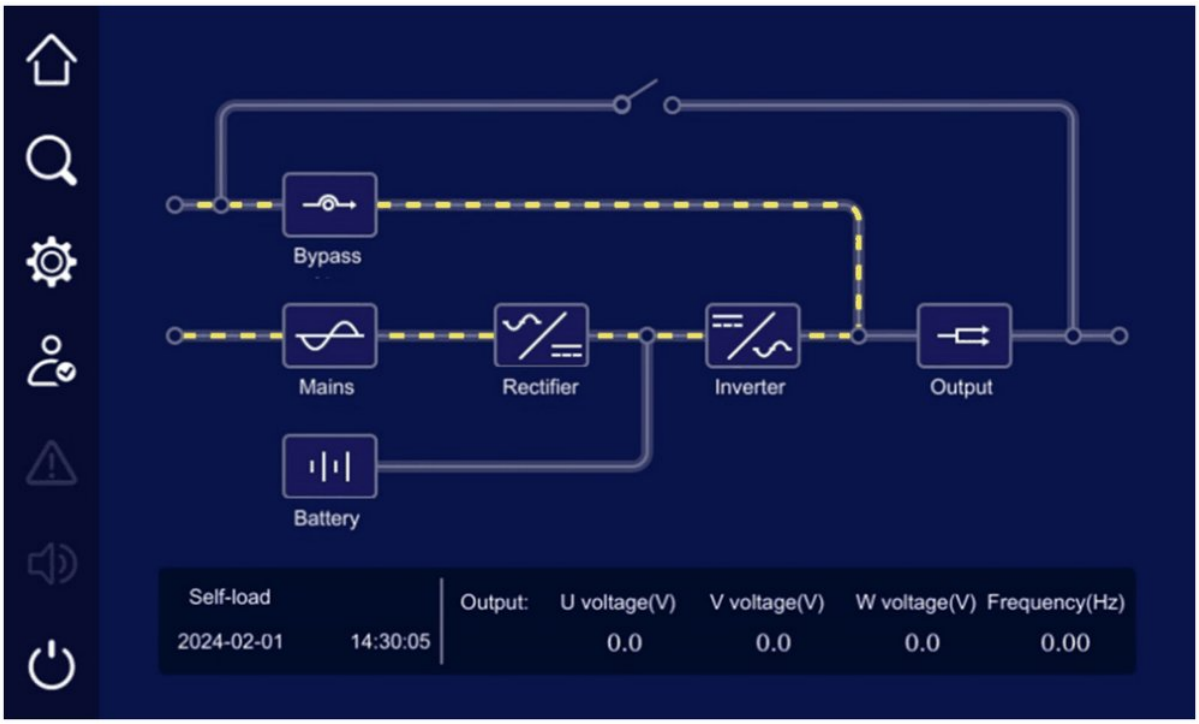

FIGURE 5-8 Grid-tied self-load mode

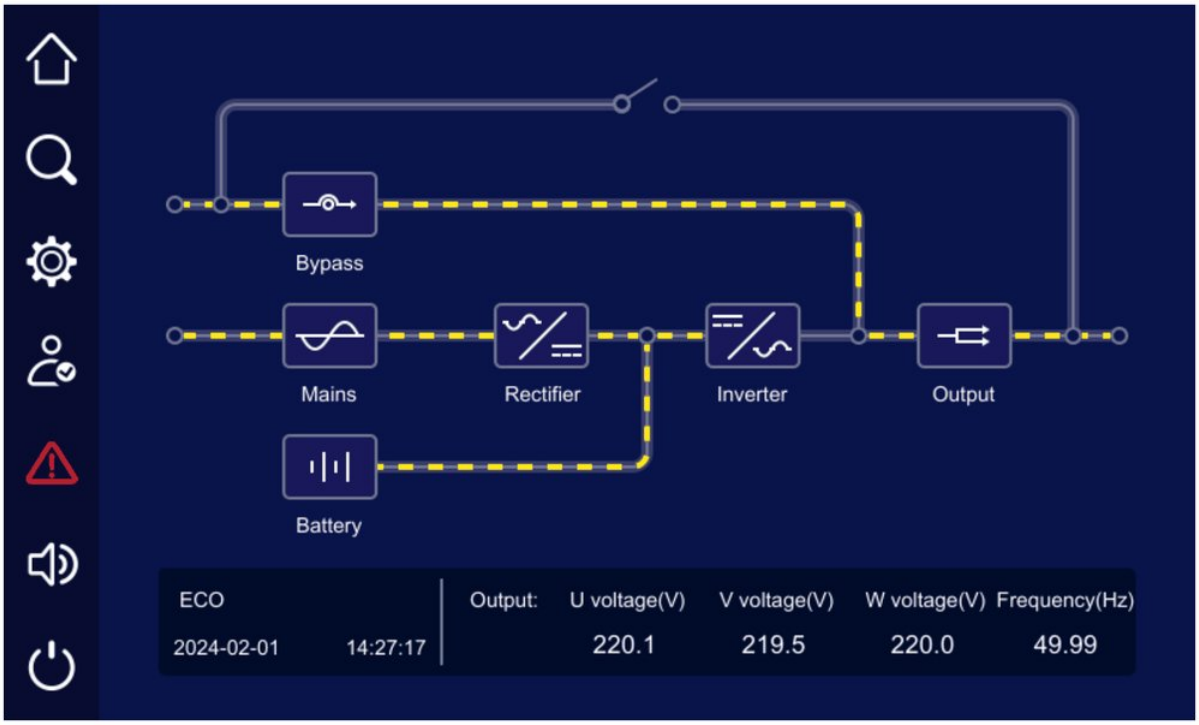

FIGURE 5-9 ECO output

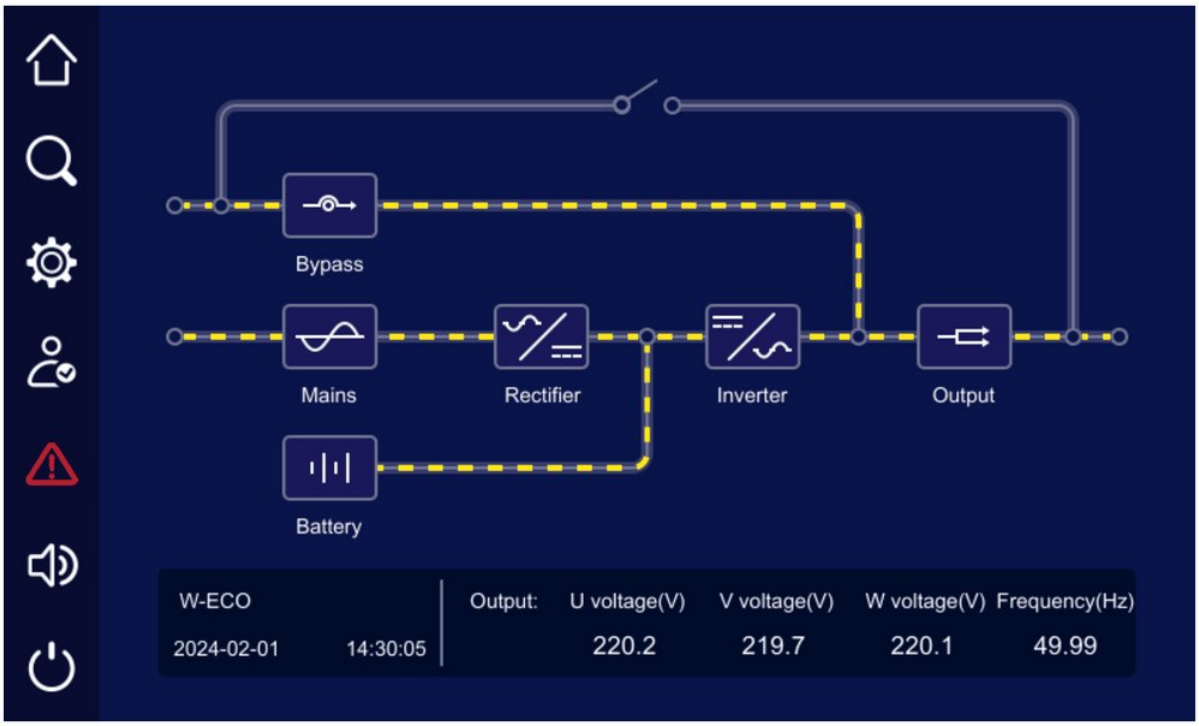

FIGURE 5-10 WECO output

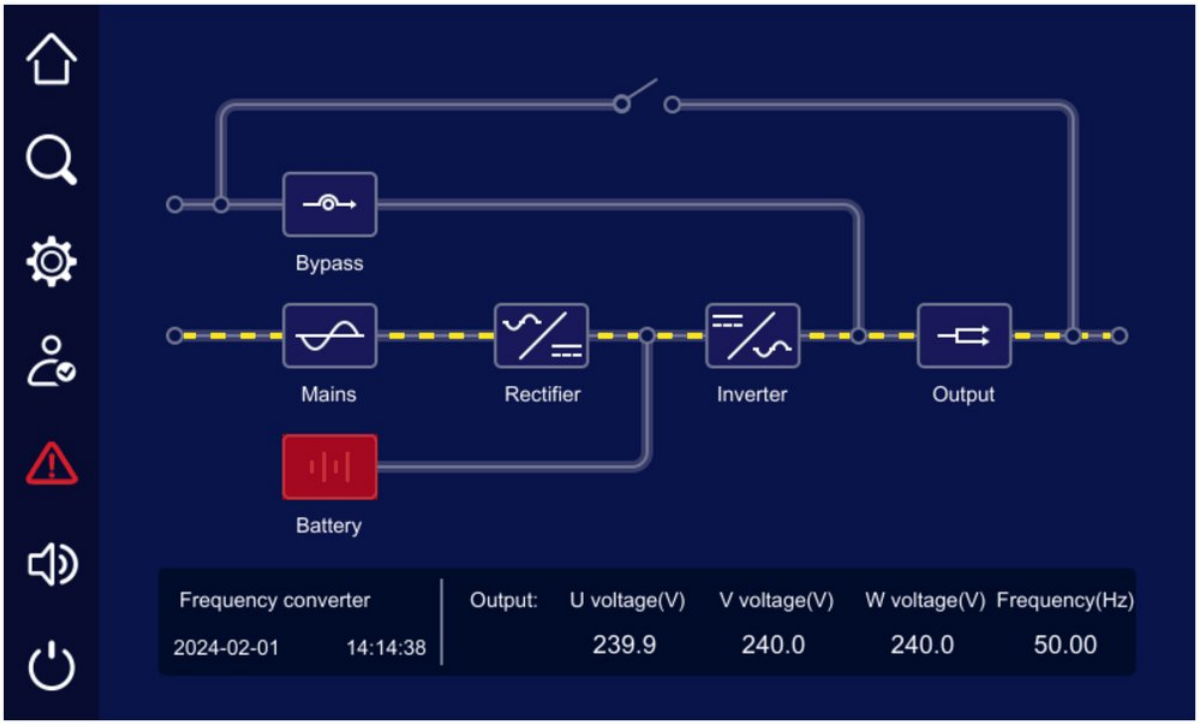

FIGURE 5-11 Frequency converter output

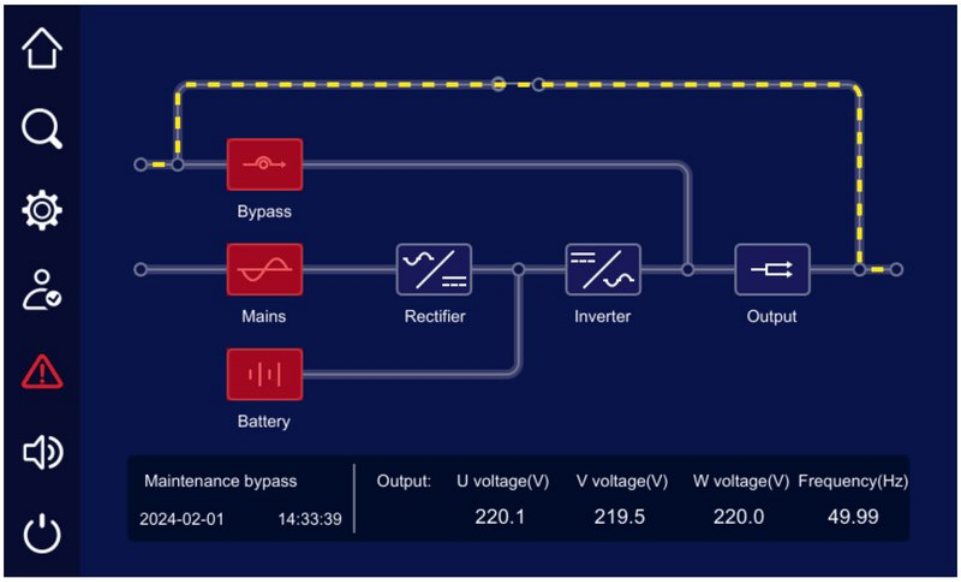



menu bar, and tap the "" icon to display the current fault info.

FIGURE 5-12 Maintenance bypass output

When an abnormal condition occurs in the module or system, the " " icon appears in the

""

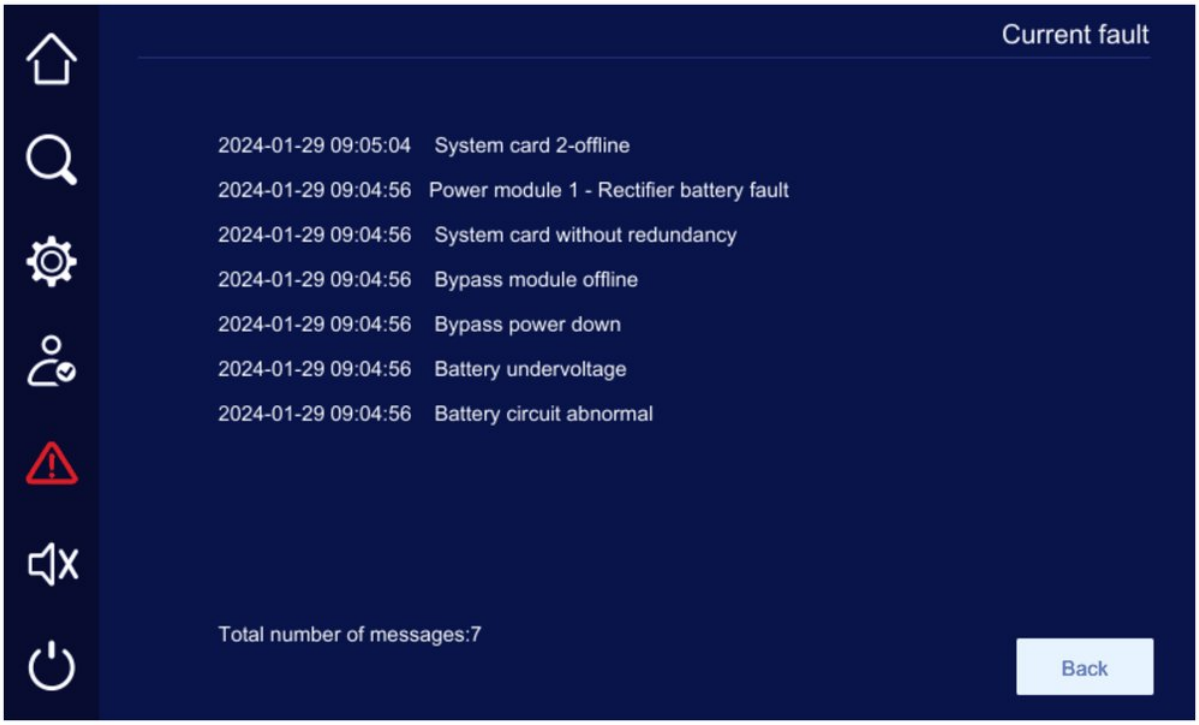

FIGURE 5-13 Current fault info

5.4 Buzzer Control

When an abnormal condition occurs in the module or system, system generates a buzzer alarm. Tap the icon in the main menu bar to turn off or turn on the buzzer. When the buzzer is turned off, the buzzer automatically starts if a new fault occurs.

> **NOTE**
> When the buzzer keeps beeping, it cannot be turned off by tapping the icon in the main menu bar unless the fault is removed. For details about the fault causes, see **2.7 Alarm Protection Function.**

5.5 Main page

5.5.1 Mains Info

In the main page, tap the  icon to enter the mains info page. The mains info page displays the mains phase voltage, mains line voltage, mains current and mains frequency.

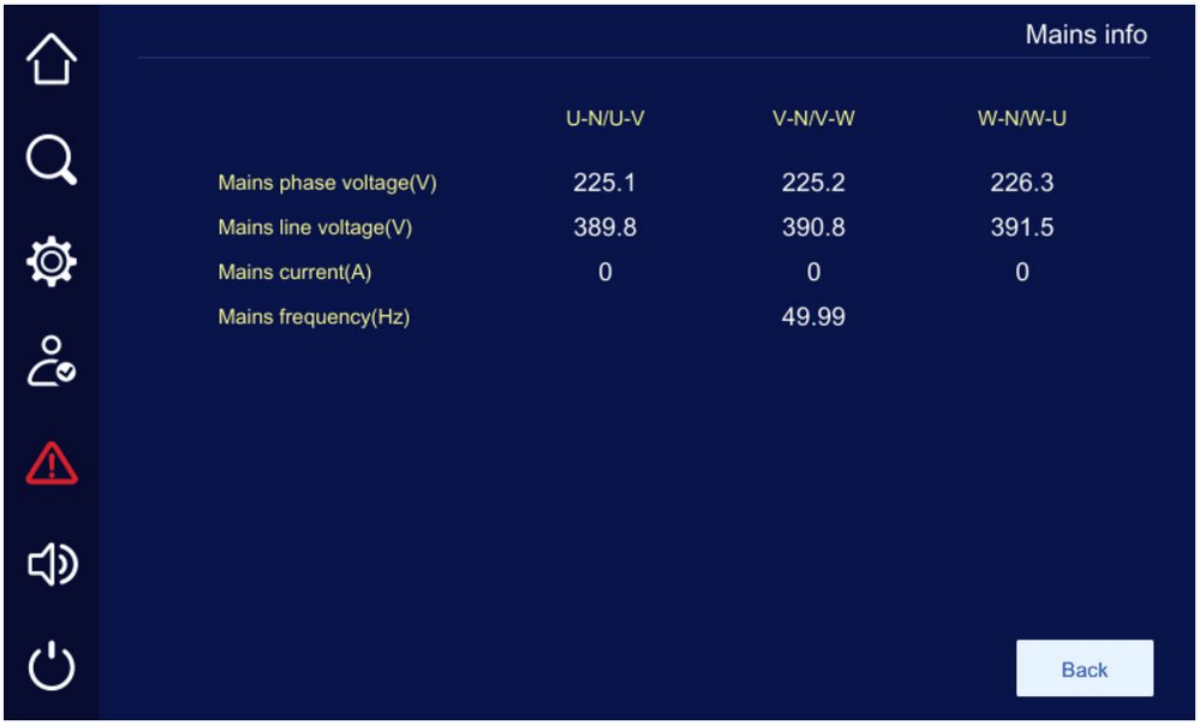

FIGURE 5-14 Mains info page

5.5.2 Bypass Info

In the main page, tap the  icon to enter the bypass info page. The bypass info page displays the bypass phase voltage, bypass line voltage, bypass current and bypass frequency.

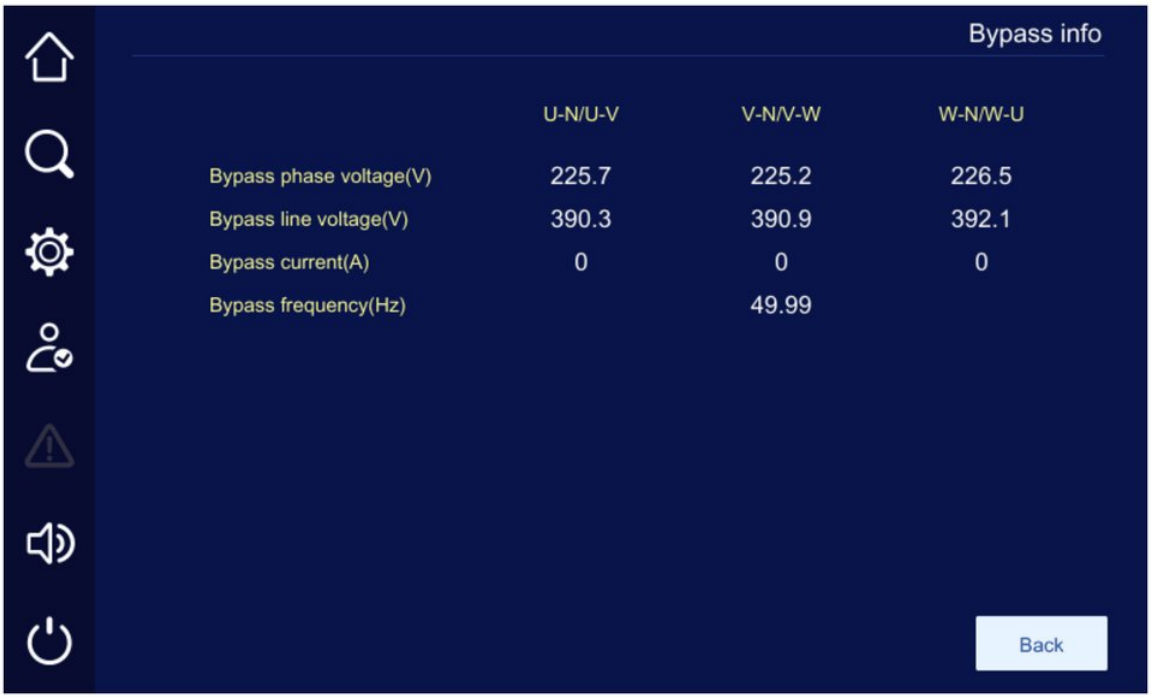

FIGURE 5-15 Bypass info page

5.5.3 Battery Info

In the main page, tap the icon to enter the battery info page. The battery info page displays the battery voltage, battery discharge current, battery charge current, battery remaining capacity, battery remaining time, battery temperature and battery state.

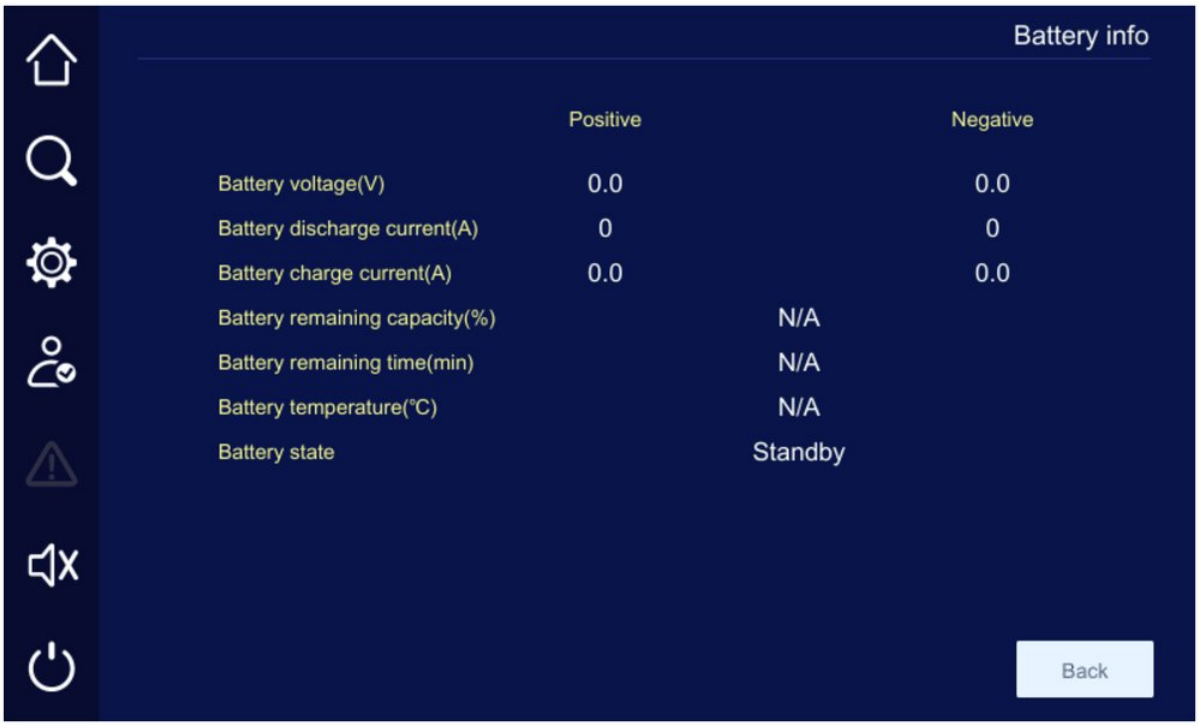

FIGURE 5-16 Battery info page

5.5.4 Rectifier Info

In the main page, tap the icon to enter the rectifier info page. In the rectifier info page, tap the Module-1 icon to view the info of each power module.



FIGURE 5-17 Rectifier info page

5.5.5 Inverter Info

In the main page, tap the icon to enter the inverter info page. In the inverter info page, tap the Module-1 icon to view the info of each power module.



FIGURE 5-18 Inverter info page

5.5.6 Output Info

In the main page, tap the icon to enter the output info page. The output info page displays the output phase voltage, output line voltage, output current, output active power, output reactive power, output apparent power, output load rate, output power factor and output frequency.

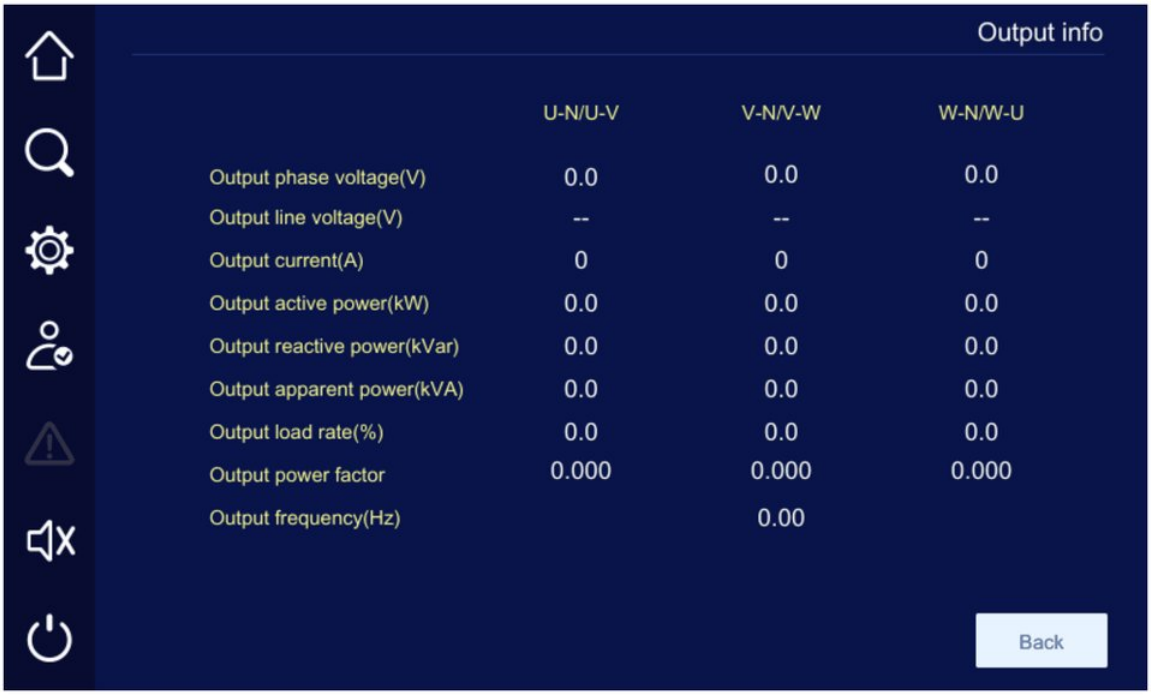

FIGURE 5-19 Output info page

5.6 Info Manage

In the menu bar, tap the icon to enter the info manage page. The info manage page displays the running info, history record, user log, smart record, device info, smart wave capture and energy info.

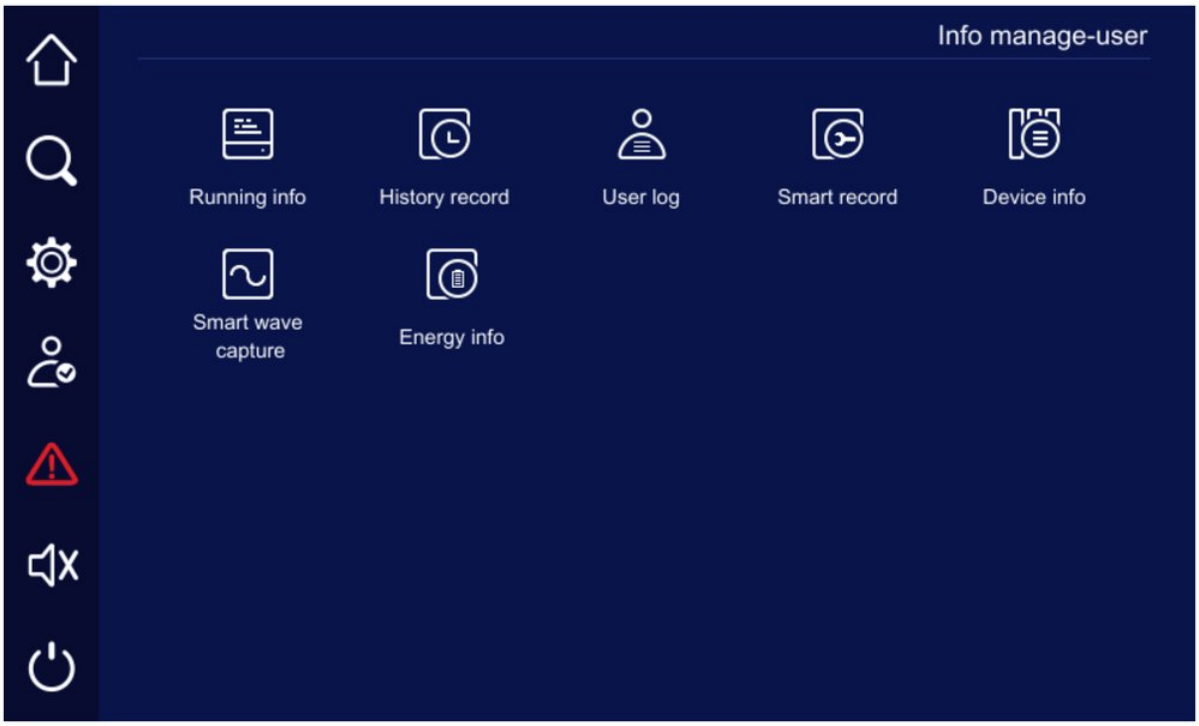

FIGURE 5-20 Info manage page

CAUTION

Up to 10000 records can be recorded. When the number of alarm records exceeds 10,000, the earliest record will be overwritten by the new record. All records are arranged in reverse chronological order.

5.6.1 Running Info

In the info manage page, tap the icon to enter the running info page. The running info page displays the system card sampling info.

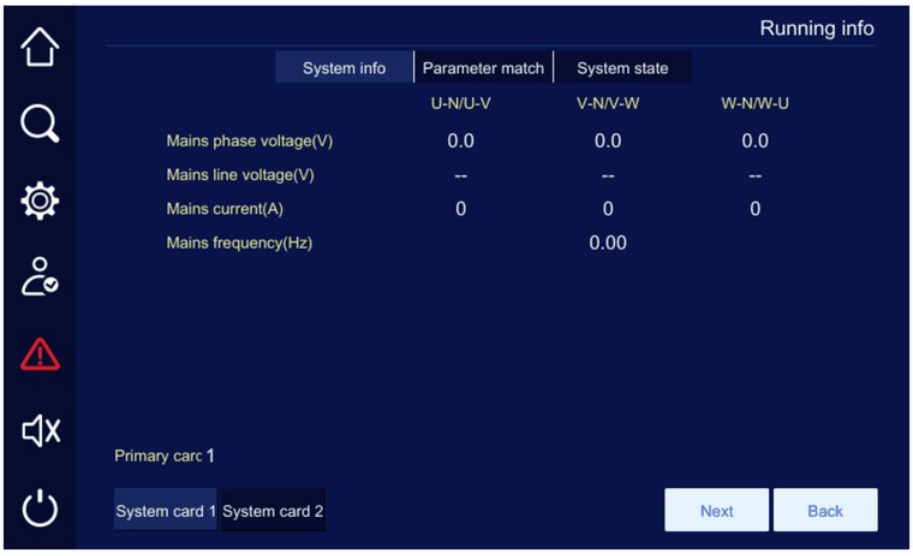

FIGURE 5-21 Running info page

5.6.2 History Record

In the info manage page, tap the 

icon to enter the history record page. The history record page displays the history fault and alarm info of the system and modules.

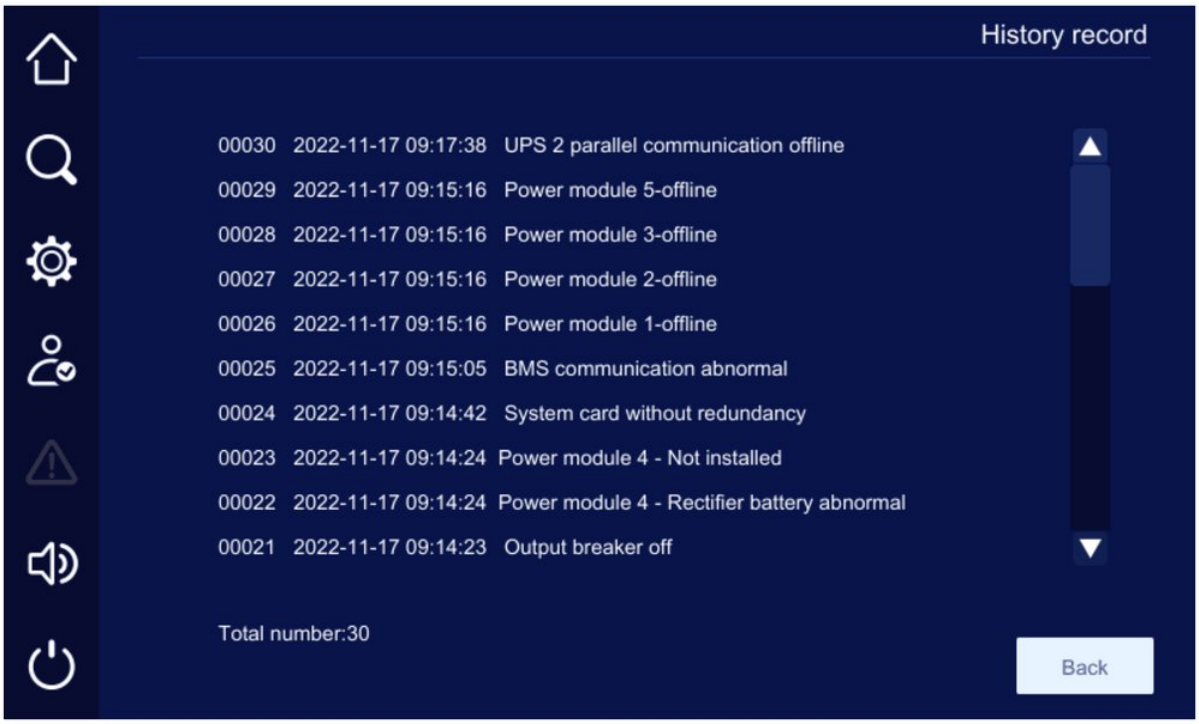

FIGURE 5-22 History record page

5.6.3 User Log

In the info manage page, tap the 

icon to enter the user log page. The user log page displays the user parameter change records.

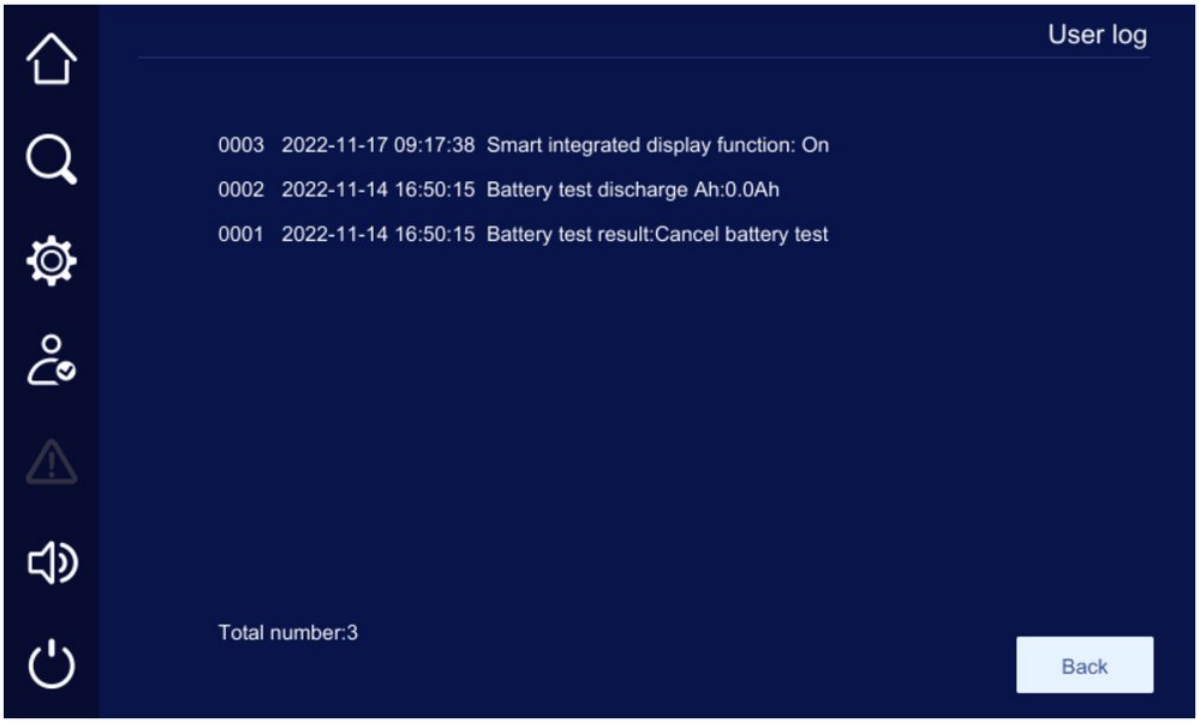

FIGURE 5-23 User log page

5.6.4 Smart Record

In the info manage page, tap the 

icon to enter the smart record page. The smart record page displays the maintenance personnel repair and replacement records.

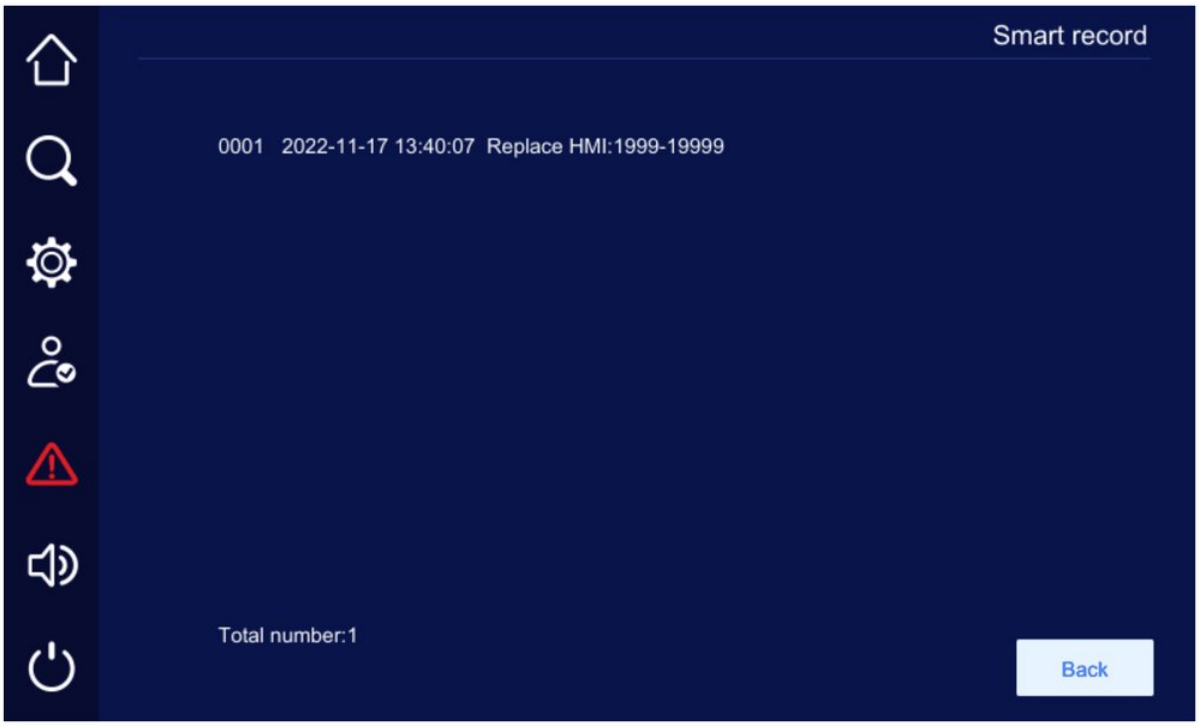

FIGURE 5-24 Smart record page

5.6.5 Device Info

In the info manage page, tap the 

icon to enter the device info page. The device info page displays the product name, model, S/N and protocol version, etc.

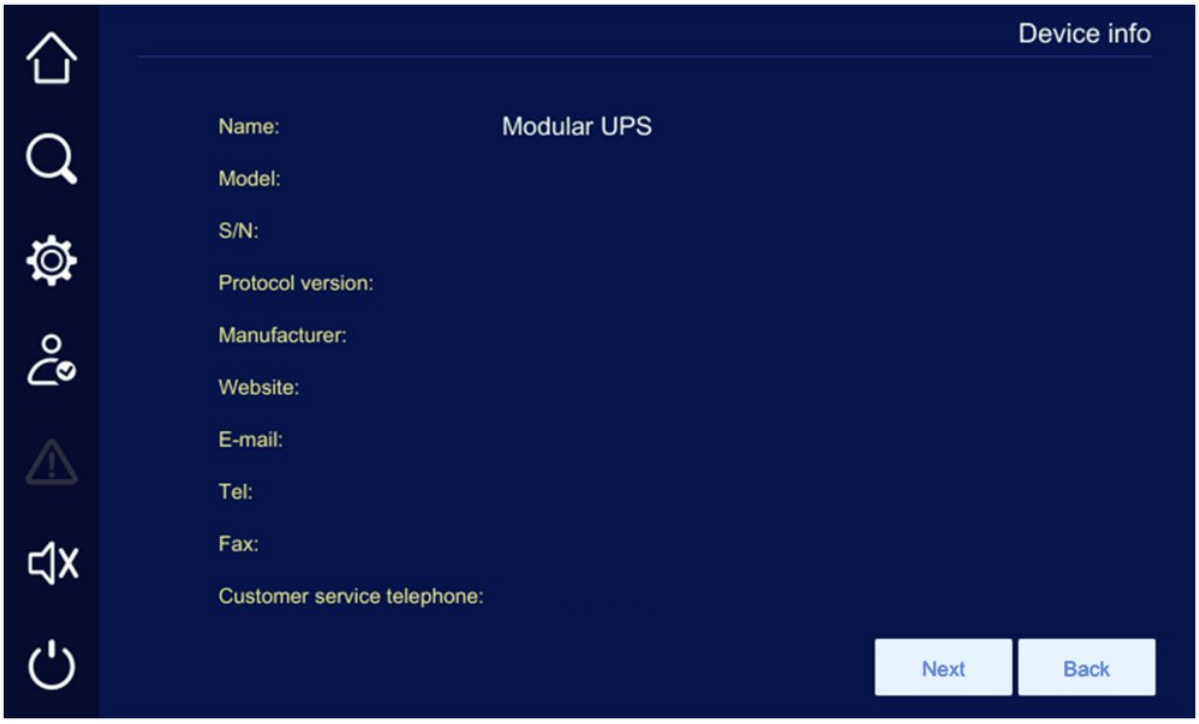

FIGURE 5-25 Device info page 1

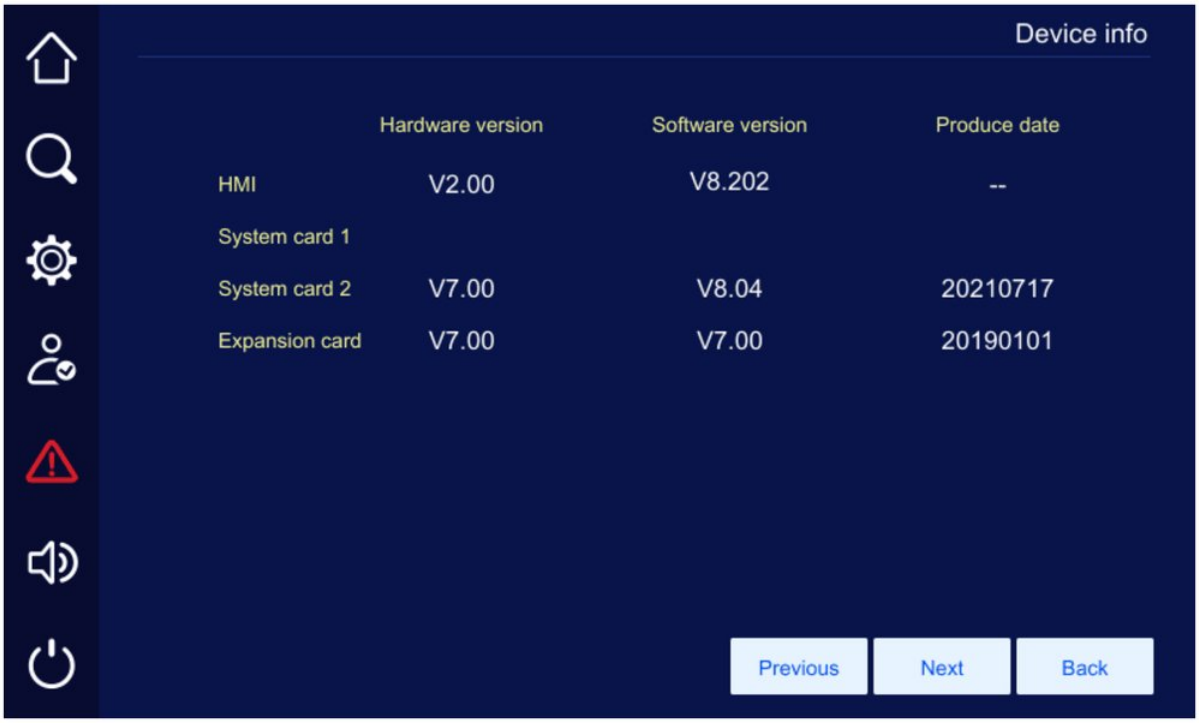

FIGURE 5-26 Device info page 2

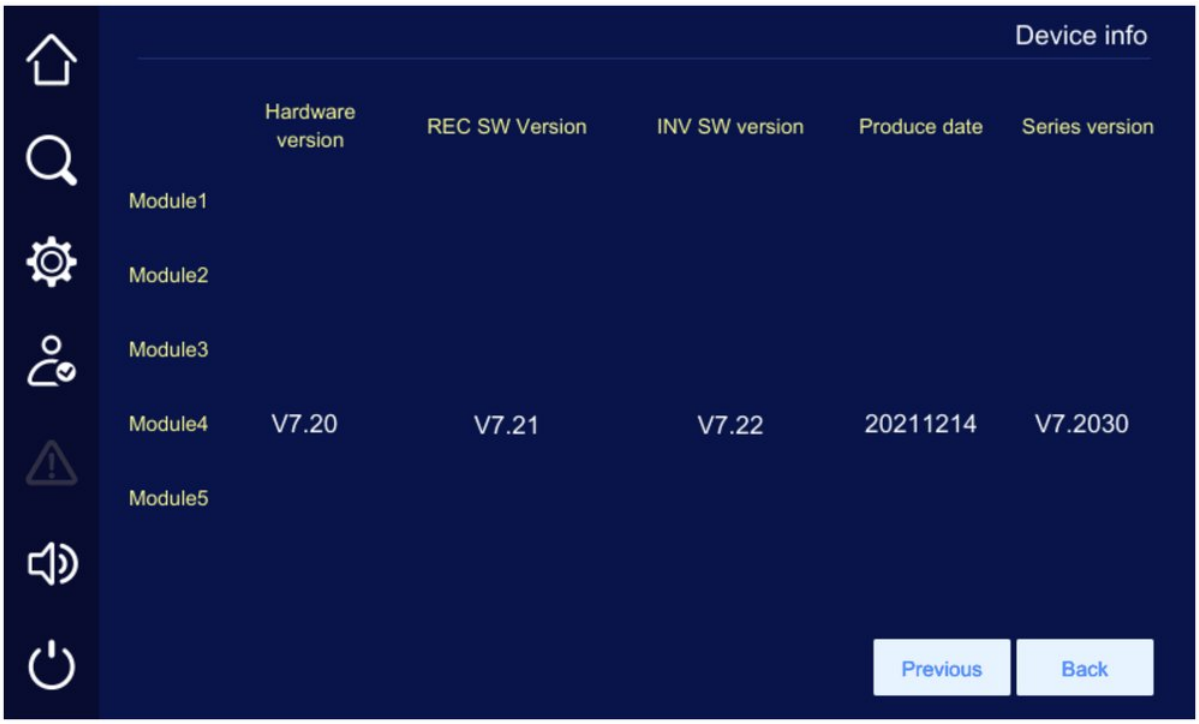

FIGURE 5-27 Device info page 3

5.6.6 Smart Wave Capture

In the info manage page, tap the icon to enter the smart wave capture page. The smart wave capture page displays the voltage/current waveform of the fault time.

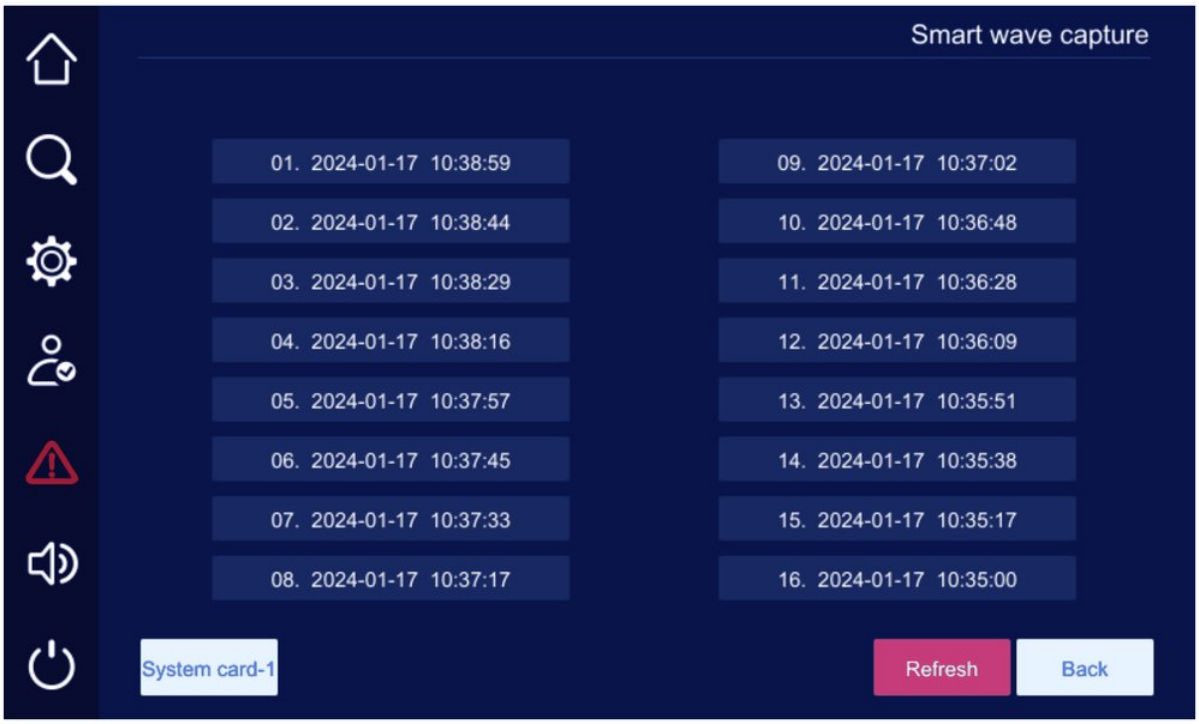

FIGURE 5-28 Smart wave capture page

5.6.7 Energy Info

In the info manage page, tap the icon to enter the energy info page. The energy info page displays the input energy and output energy.

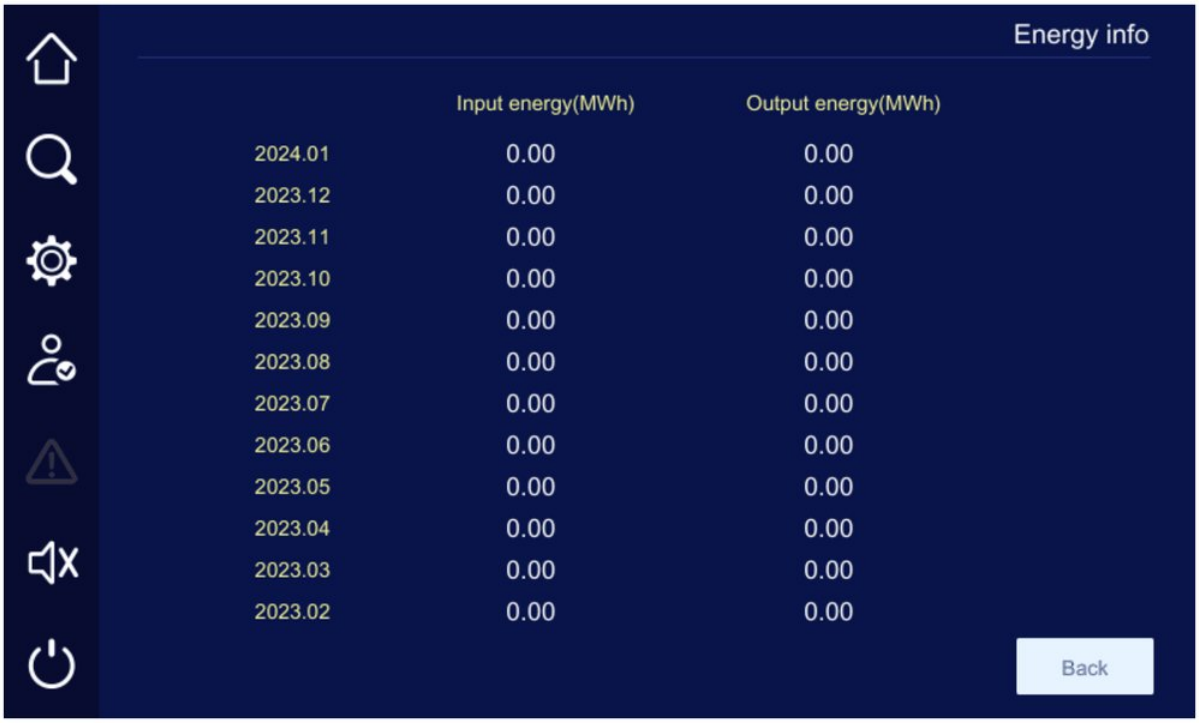

FIGURE 5-29 Energy info page

5.7 Setting Manage

In the menu bar, tap the icon to enter the setting manage page. The setting manage page displays the cabinet setting, battery setting, battery test, output setting, smart mode, dry contact, screen setting, password setting, communication setting and record manage.

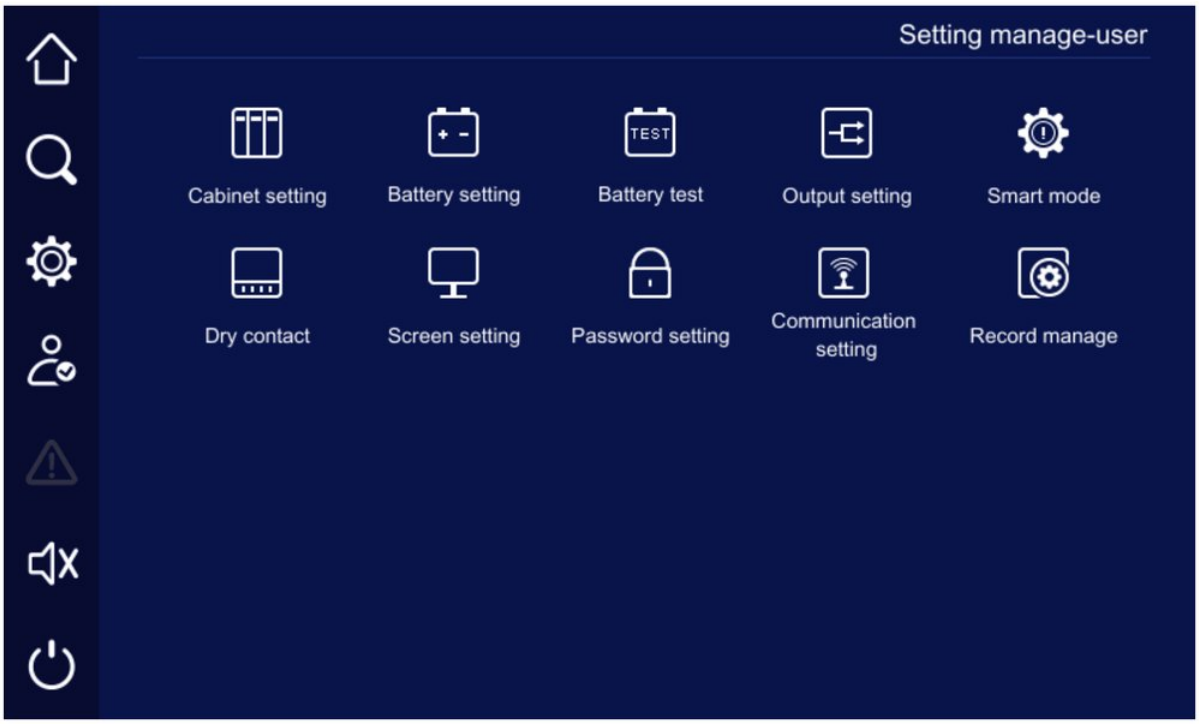

FIGURE 5-30 Setting manage page

> **NOTE**
> When the setting item is grey, it cannot be set.

5.7.1 Cabinet Settting

In the setting manage page, tap the icon to enter the cabinet setting page.

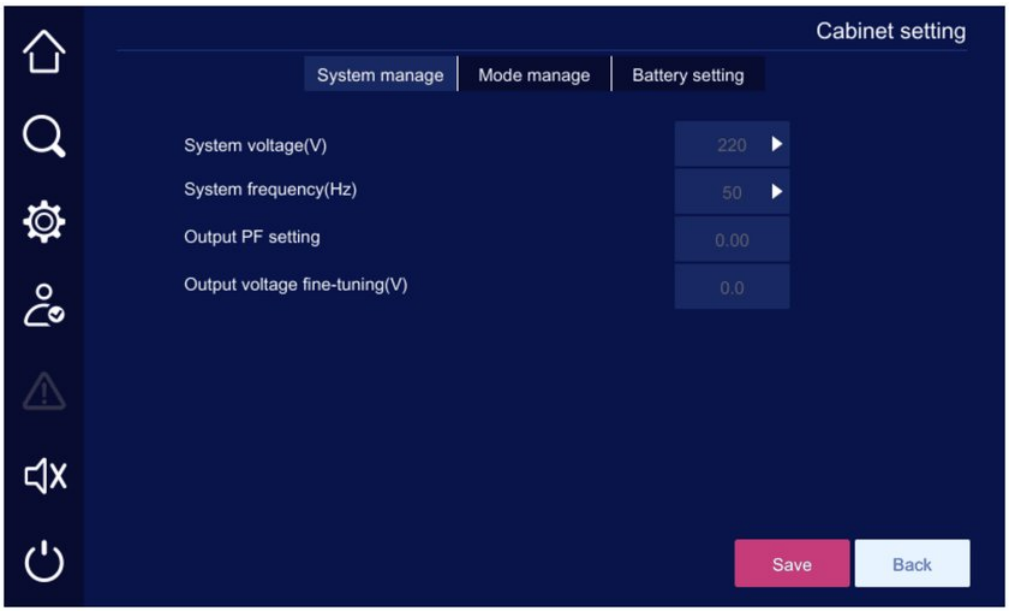

FIGURE 5-31 Cabinet setting page

5.7.2 Battery Setting

In the setting manage page, tap the  icon to enter the battery setting page.

FIGURE 5-32 Battery setting page

TABLE 5-5 Battery manage 1 setting description

No.	Item	Description	Parameter setting
1	Cell over-voltage protection point	The max. voltage that the cell can withstand, exceeding the set value will trigger the battery protection function.	It can be set from 2.366V/cell to 2.450V/cell. Default is 2.400V/cell.
2	Cell under-voltage protection point	The min. voltage that the cell can withstand, lower than the set value will trigger the battery protection function.	It can be set from 1.633V/cell to 1.833V/cell. Default is 1.667V/cell.
3	Cell under-voltage alarm point	Cell enters the under-voltage state, an alarm is triggered to inform the user that the battery is going to run out. If the battery continues to discharge, the battery protection may be taken.	It can be set from 1.880V/cell to 2.000V/cell. Default is 1.950V/cell.
4	Cell equalized charge voltage	Cell charge voltage in the equalized charge state	It can be set from 2.300V/cell to 2.400V/cell. Default is 2.350V/cell.
5	Cell floating charge voltage	Cell charge voltage in the floating charge state	It can be set from 2.167V/cell to 2.300V/cell. Default is 2.270V/cell.
6	Battery charge current	The max. battery charging current	It can be set from 5A to 750A. Default is 20A, but does not exceed the charging capacity.
7	Equalized charge hold time	The max. hold time in equalized charge state	It can be set from 1min to 720min. Default is 30min.
8	Battery test time	Battery standard test time	It can be set from 1min to 240min. Default is 10min.

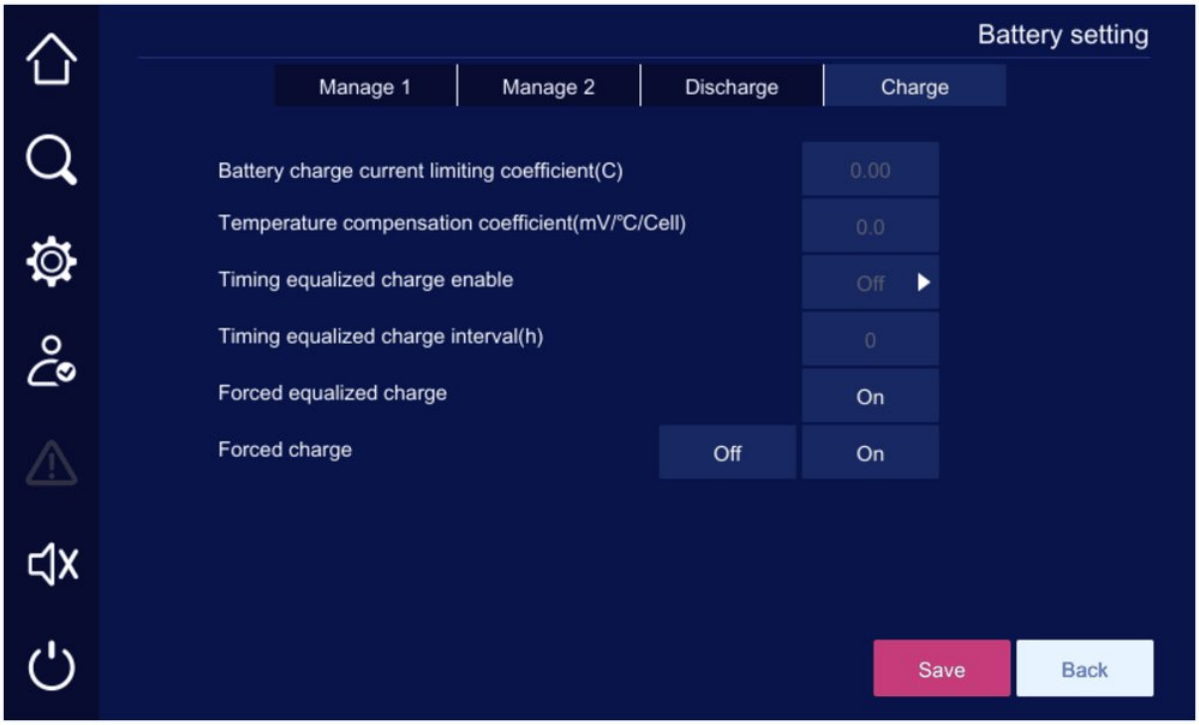

FIGURE 5-33 Battery setting-charge manage page

TABLE 5-6 Charge manage setting description

No.	Item	Description	Parameter setting
1	Forced equalized charge	Force the battery in the floating charge state or sleep state to the equalized charge state.	It can be set as on or off.
2	Forced charge	Keep the battery in the equalized charge state up to 10min.	It can be set as on or off.

5.7.3 Battery Test

In the setting manage page, tap the  icon to enter the battery test page.

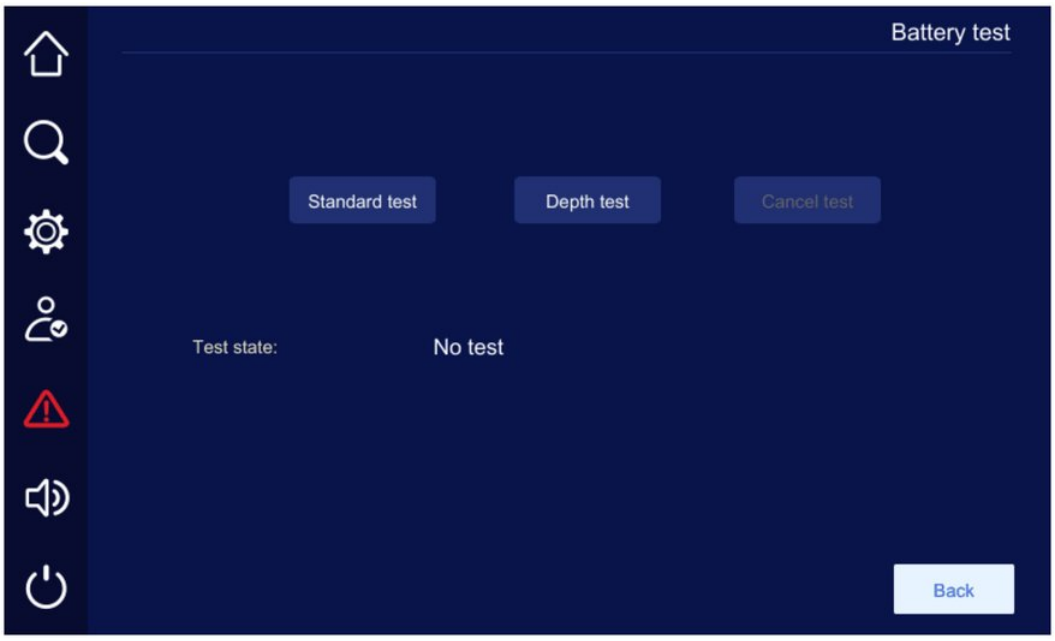

FIGURE 5-34 Battery test page

TABLE 5-7 Battery test setting description

No.	Item	Description
1	Standard test	Shallow discharge the battery. The battery cannot be used when it is not running for a long time. To verify the health of battery, perform a discharge test on the battery without mains power failure.
2	Depth test	Depth discharge the battery. Discharge battery to the under-voltage alarm point. You can learn more about the battery performance and the battery health via depth discharge.
3	Cancel test	Manually cancel the standard test state and the depth test state.

5.7.4 Output Setting

In the setting manage page, tap the 

icon to enter the output setting page.

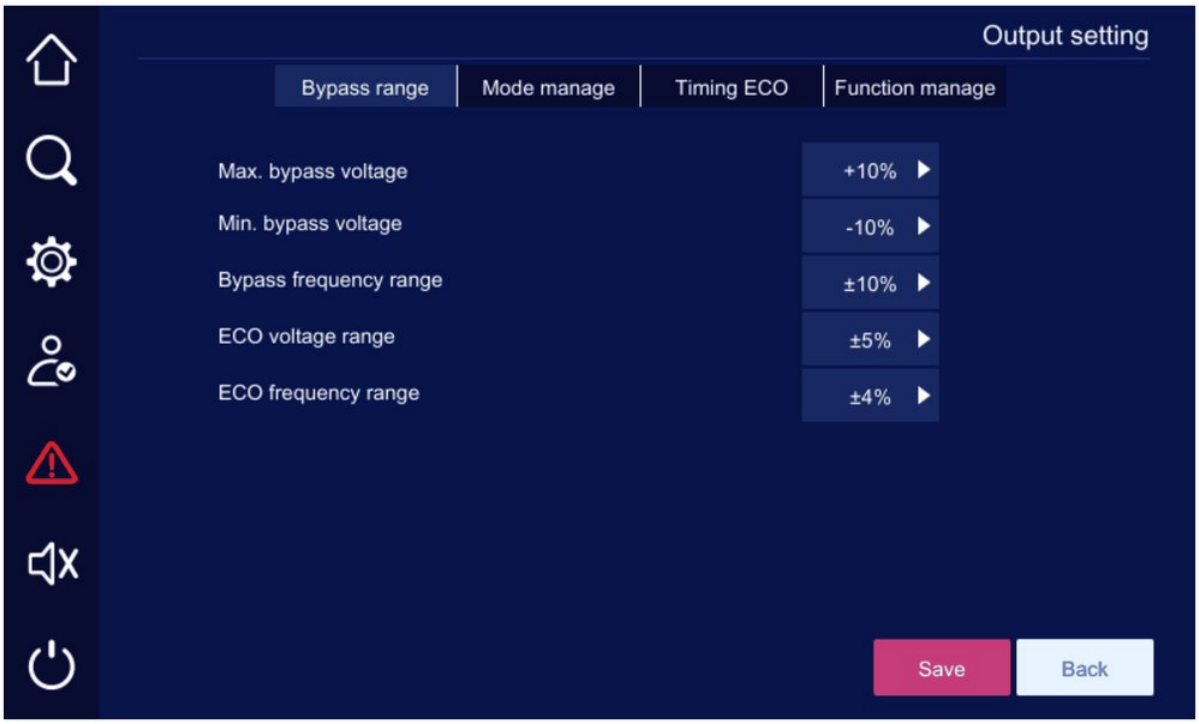

FIGURE 5-35 Output setting page

TABLE 5-8 Output setting description

No.	Item	Description	Parameter setting
1	Max. bypass voltage	When the deviation of the bypass voltage from the rated voltage is greater than the set value, the system displays the "bypass over-voltage" alarm, and the bypass is not available.	It can be set as +10%, +15%, +20% or +25%. Default is +15%.
2	Min. bypass voltage	When the deviation of the bypass voltage from the rated voltage is smaller than the set value, the system displays the "bypass under- voltage" alarm, and the bypass is unavailable.	It can be set as -10%, -15%, -20% and -30%. Default is -20%.
3	Bypass frequency range	When the deviation of the bypass frequency from the rated frequency is greater than the set value, the system displays the "bypass over- frequency" or "bypass under-frequency" alarm, and the bypass is	It can be set as ±2%, ±4%, ±6%, ±8%, ±10% and ±20%. Default is ±10%.
No.	**Item**	**Description**	**Parameter setting**
		not available.	
4	ECO voltage range	When the deviation of the bypass voltage from the rated voltage in ECO mode is greater than the set value, the system displays the "ECO over-voltage" or "ECO under- voltage" alarm, and ECO mode switches to inverter mode.	It can be set as ±5%, ±10% or ±15%. Default is ±15%.
5	ECO frequency range	When the deviation of the bypass frequency from the rated frequency in ECO mode is greater than the set value, the system displays the "ECO over-frequency" or "ECO under- frequency" alarm, and ECO mode switches to inverter mode.	It can be set as ±2% or ±4%. Default is ±2%.

5.7.5 Smart Mode

In the setting manage page, tap the 

icon to enter the smart mode page.

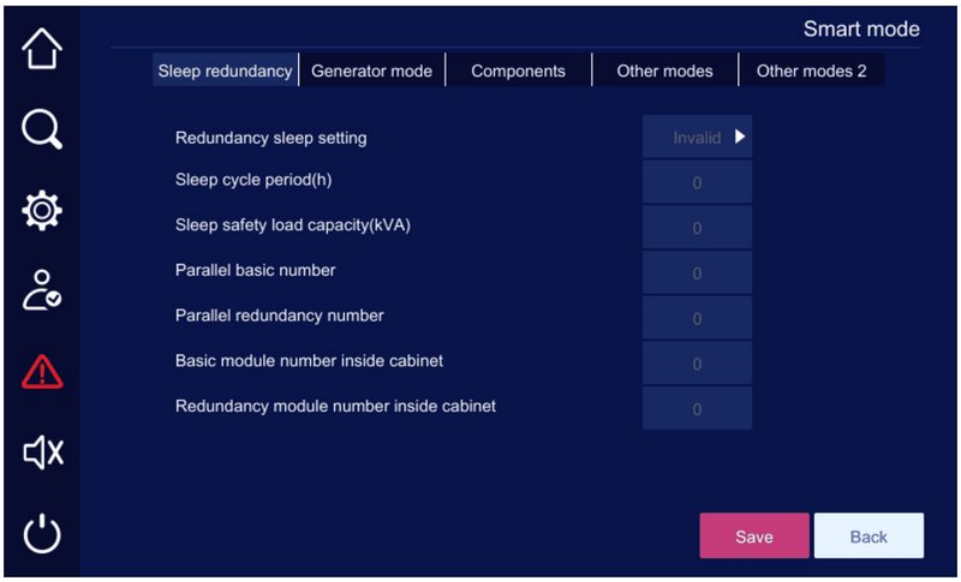

FIGURE 5-36 Smart mode page

5.7.6 Dry Contact

In the setting manage page, tap the  icon to enter the dry contact page.

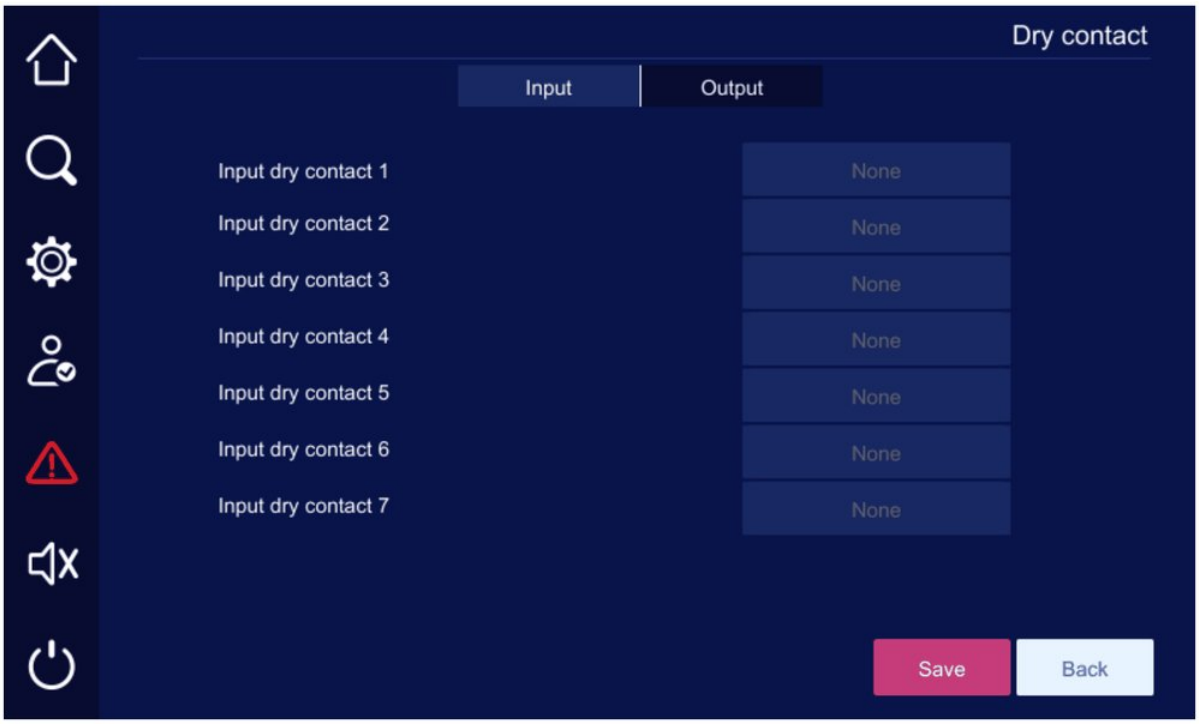

FIGURE 5-37 Dry contact page

> **NOTE**
> Input dry contact definition refers to Table 2-8 **Input dry contact definition,** and output dry contact definition refers toTable 2-9 **Output dry contact definition**.

5.7.7 Screen Setting

In the setting manage page, tap the  icon to enter the screen setting page.

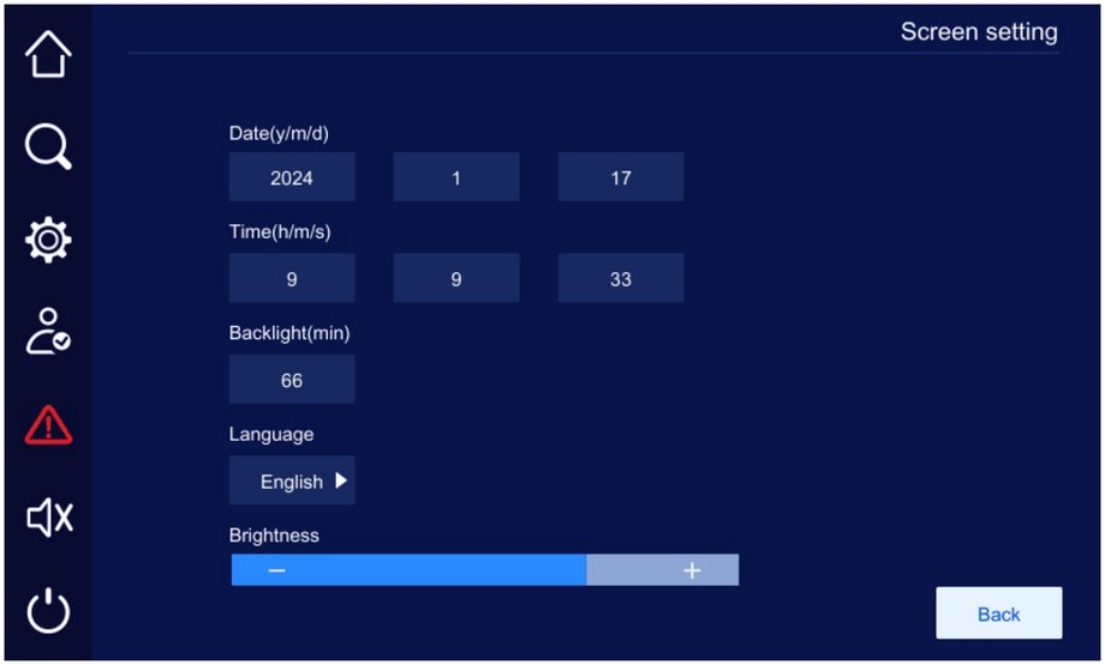

FIGURE 5-38 Screen setting page

5.7.8 Password Setting

In the setting manage page, tap the 

icon to enter the password setting page.

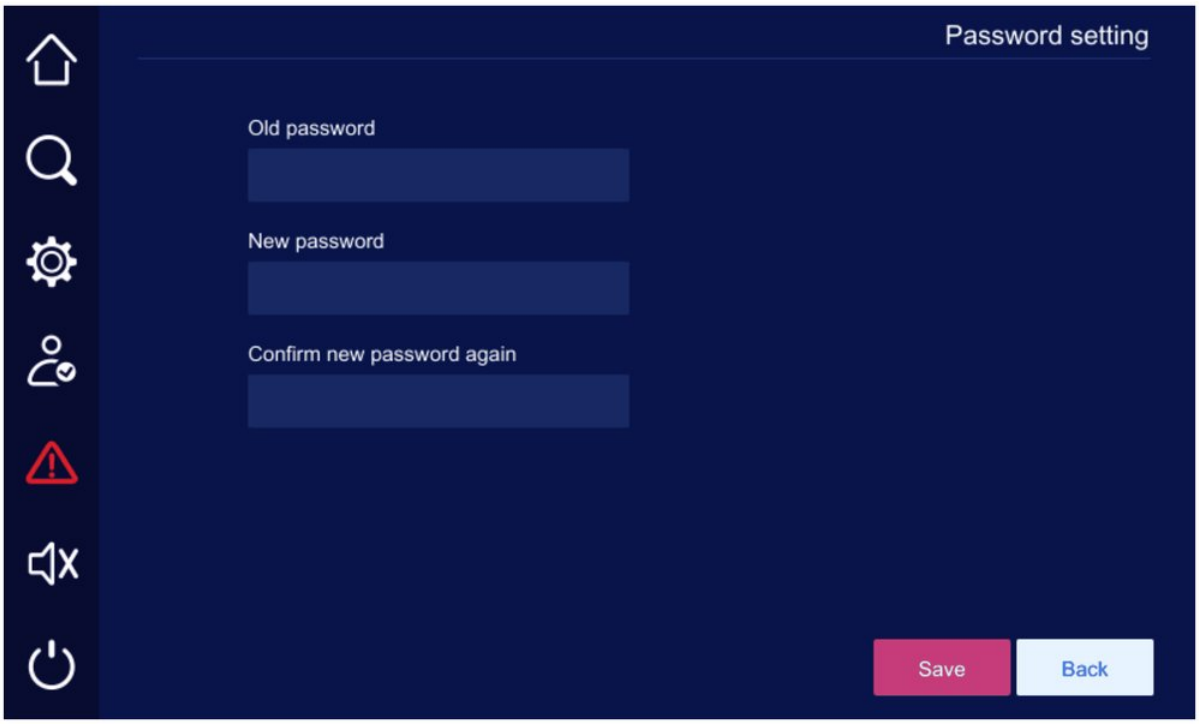

FIGURE 5-39 Password setting page

> **NOTE**
> User initial password is 111.

5.7.9 Communication Setting

In the setting manage page, tap the 

icon to enter the communication setting page.

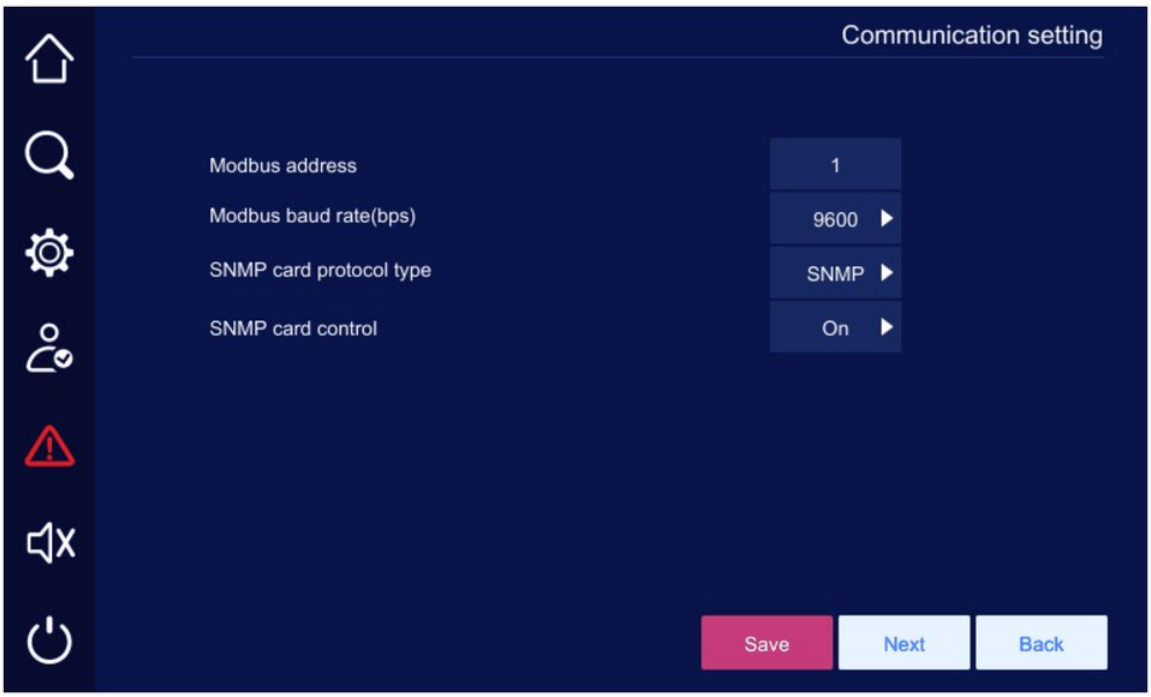

FIGURE 5-40 Communication setting page

TABLE 5-9 Communication setting description

No.	Item	Description	Parameter setting
1	Modbus address	Serial port address for communication.	It can be set from 1 to 247. Default is 1.
2	Modbus baud rate (bps)	Match the onsite network conditions when communication.	It can be set as 2400, 4800, 9600 or 19200. Default is 9600.
3	SNMP card protocol type	-	It can be set as SNMP or Modbus. Default is SNMP.
4	SNMP card control	-	It can be set as on or off.

5.7.10 Record Manage

In the setting manage page, tap the 

icon to enter the record manage page.

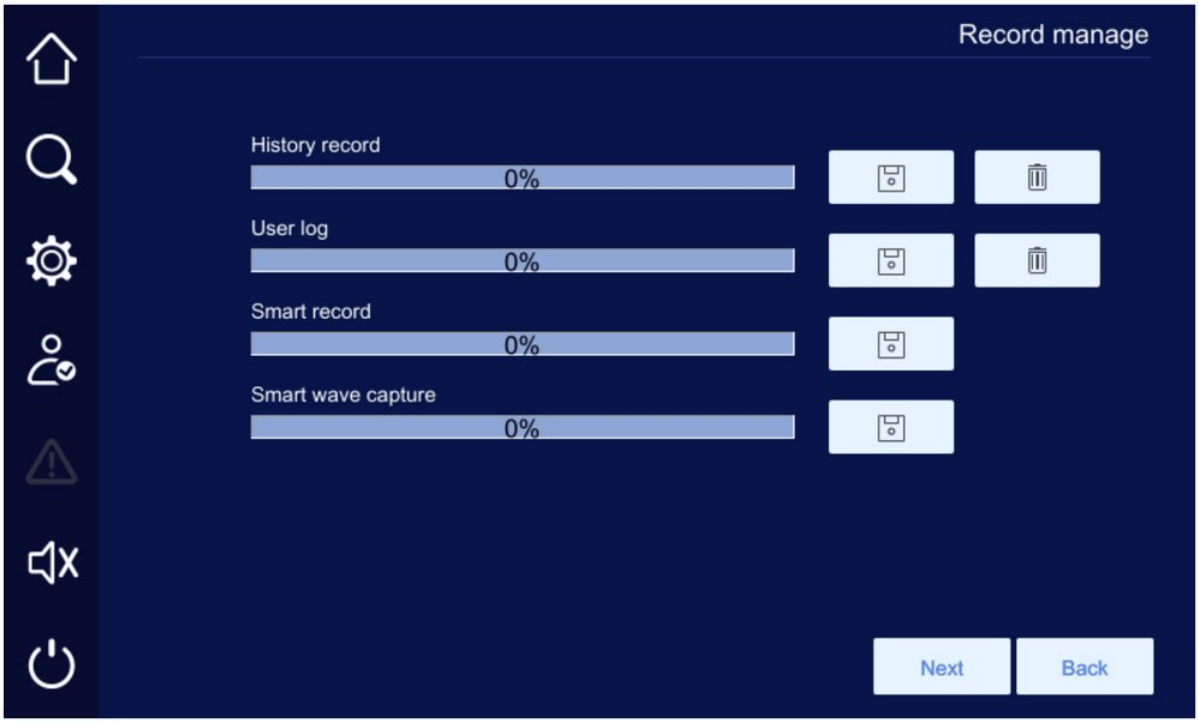

FIGURE 5-41 Record manage page

5.8 Inverter ON/OFF

In the menu bar, tap the icon to enter the inverter ON/OFF page. When the system is in the inverter power-off state, tap the icon to enter the inverter power-on page, and then tap **OK** button.

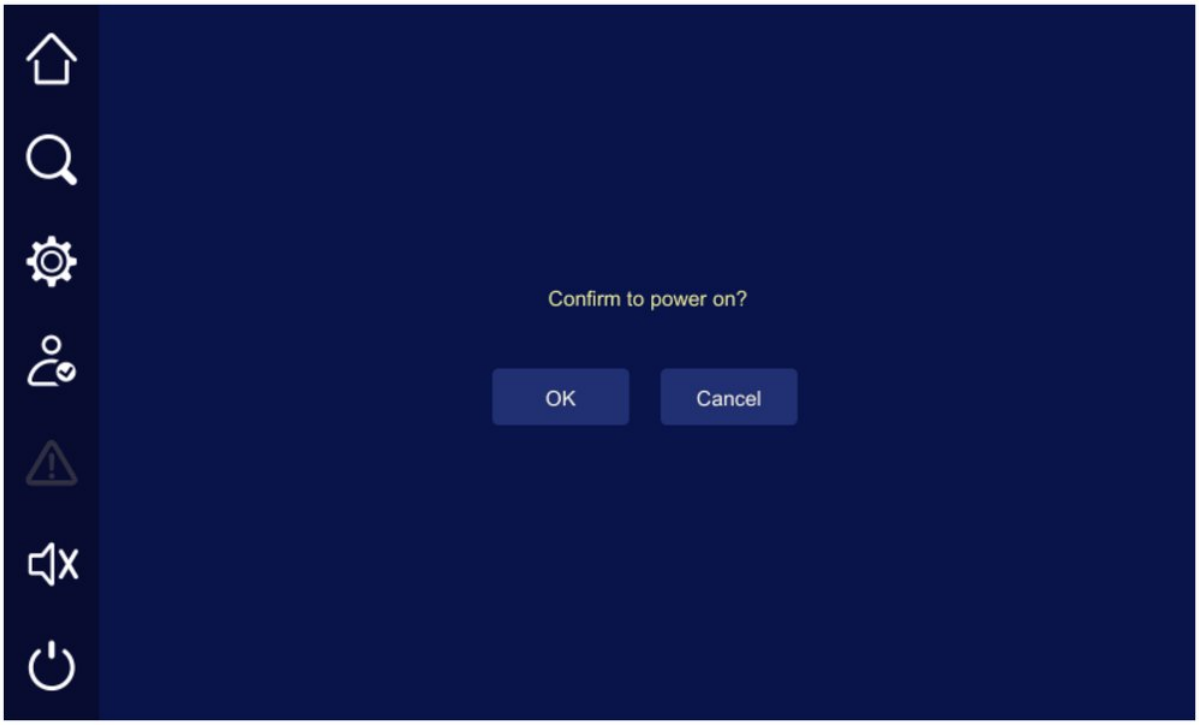

FIGURE 5-42 Inverter power-on page

CHAPTER 6

06 Maintenance and Troubleshooting

IN THIS CHAPTER

6.1 Manual Maintenance Operation
6.2 Replace Power Module
6.3 Maintenance Guide
6.4 Battery Test
6.5 Troubleshooting

6.1 Manual Maintenance Operation

When performing maintenance but the load cannot power down, perform the following operations.

CAUTION

Only qualified professionals may perform the following operations. AEC accepts no responsibility for problems caused by unauthorised personnel.

6.1.1 Switching from Inverter Mode to Maintenance Bypass Mode

CAUTION

If the bypass is normal, the system will turn to the bypass mode after the inverter powers off. If the bypass is abnormal, system will have no output after the inverter powers off. Before powering off inverter, please ensure that the load is switched off and can withstand the power failure at any time.

PROCEDURE

1. Power off inverter.

- Power-off method 1: OFF combination button on the operation panel

Press the OFF combination button on the operation panel for 3s.

- Power-off method 2: Touch screen

In the main page, tap the icon to enter the inverter power-off page, and then tap OK button.

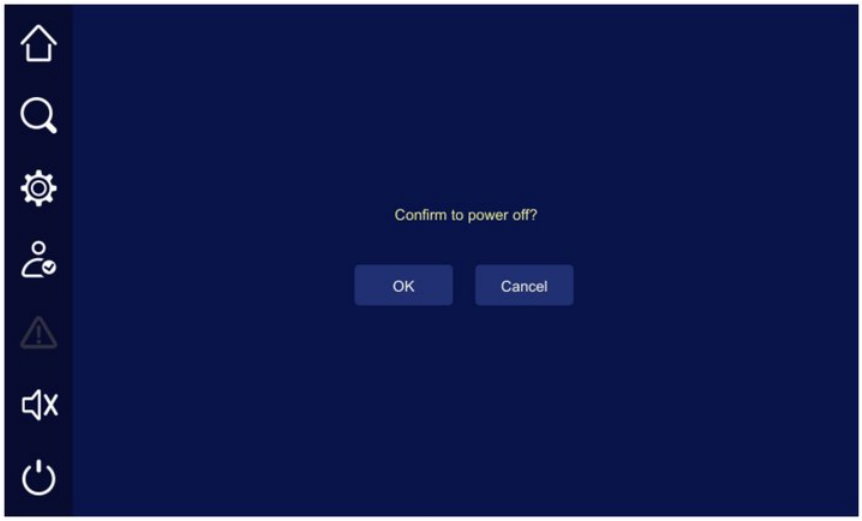

FIGURE 6-1 Inverter power-off page

The inverter indicator on the operation panel is off, and the bypass indicator on the operation panel is green on, and the system switches from inverter mode to bypass mode.

2. Ensure that the inverter is powered off again, and then switch on the maintenance bypass switch. At this time, the touch screen displays "Maintenance bypass open".
3. Switch off the external battery switch, mains switch, bypass switch and output switch of UPS one by one.
4. Wait until the touch screen and LED indicators on the operation panel are off. About 15 minutes, it can perform maintenance.

CAUTION

- Do not switch on the output switch when UPS is in maintenance bypass mode.
- High voltage exists in the input and output copper bars when UPS is in the maintenance bypass mode, and accidental touching may result in electric shock.

6.1.2 Switching from Maintenance Bypass Mode to Inverter Mode

CAUTION

Before switching from maintenance bypass mode to inverter mode ensure that the bypass input is normal.

PROCEDURE

1. Switch on the bypass switch and the mains switch one by one.
2. Place the ready switch of the bypass module in state. Switch on the external battery switch (Before switching on the switch, ensure there is no alarm of "Not allow to connect battery" on the touch screen.).
3. Switch on the output switch, the output information icon turns to icon in the main page of touch screen.
4. Wait until the bypass indicator on the operation panel are green on, switch off the maintenance bypass switch, "Maintenance bypass open" prompt on the touch screen disappears, system stop beeping.
5. Place the ready switches of all power modules in state.
6. Power on inverter.

Wait for the run indicators of all power modules are green on and flashing slowly, perform the inverter power-on operation.

- Power-on method 1: **ON** combination button on the operation panel

Press the **ON** combination button on the operation panel for 3s.

- Power-on method 2: Touch screen

In the main page, tap the icon to enter the inverter power-on page, and then tap **OK** button.

The inverter indicator on the operation panel is green on. About 10s later, the inverter startup is completed, the bypass indicator on the operation panel is off, and the system switches from bypass mode to inverter mode.

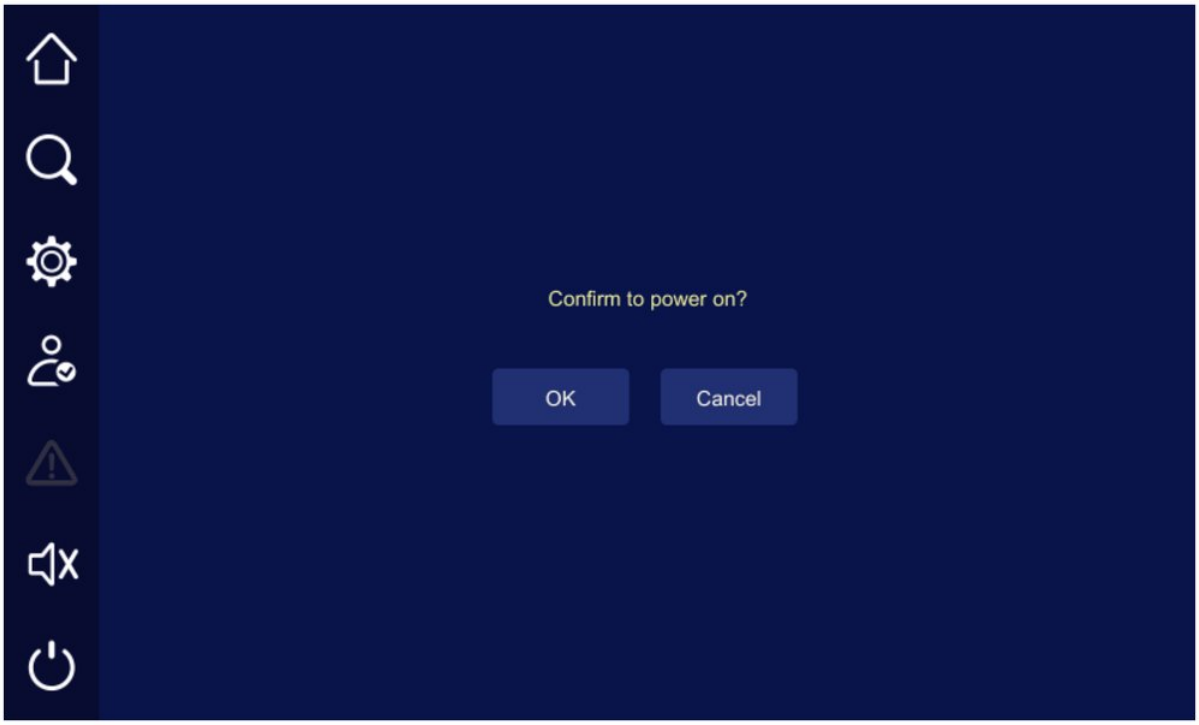

FIGURE 6-2 Inverter power-on page

6.2 Replace Power Module

CAUTION

- Move the power module by many installers or use a suitable moving tool (e.g. lift truck).
- Prevent foreign objects from the connectors of power module and cabinet.
- Power modules are plugged and unplugged from cabinet via connectors. Push the power modules into cabinet slowly and evenly. Do not push power modules vigorously. Otherwise, the connectors may be deformed, resulting in poor connection and other faults.
- Do not pull out power modules quickly after it is pushed into place.
- When using the lift truck, ensure that the wheels of the lift truck are locked and there are no objects on the workbench.
- The lift truck can only carry power modules over short distances on solid and flat ground. Do not use the lift truck as a module transport tool on slopes, potholes and other poor ground.

PROCEDURE

1 Open the front door of UPS with a key.

2 Dismantle the power module to be replaced.

1. Place the ready switch of the power module in state.
2. Dismantle the screws between power module and cabinet.
3. Lift the lift truck to the position of the power module to be replaced, and slowly pull out the power module through handles, and then gently lift the power module onto the lift truck.

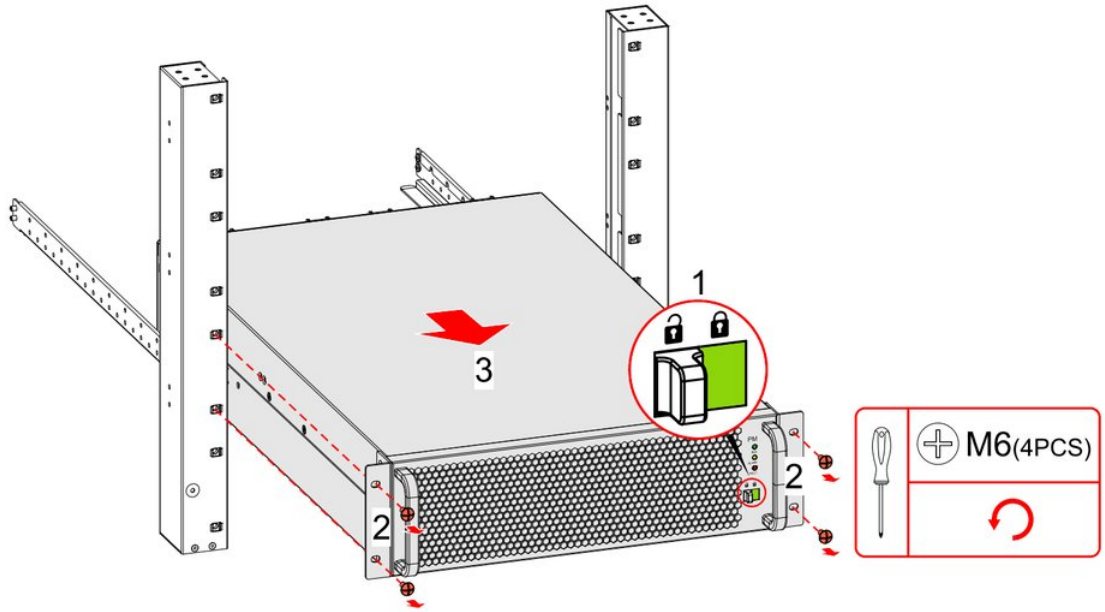

FIGURE 6-3 Dismantle power module

3 Install a new power module.

1. Unpack the power module.
2. Place the ready switch of the power module in 🔓 state.
3. Lift the power module onto the lift truck, then lift the lift truck to the position of the power module to be replaced, and push power module into cabinet slowly. When the power module is in contact with the cabinet connector, gently push the power module into the cabinet.
4. Fasten the screws between power module and cabinet.
5. Place the ready switch of the power module in 🔒 state.

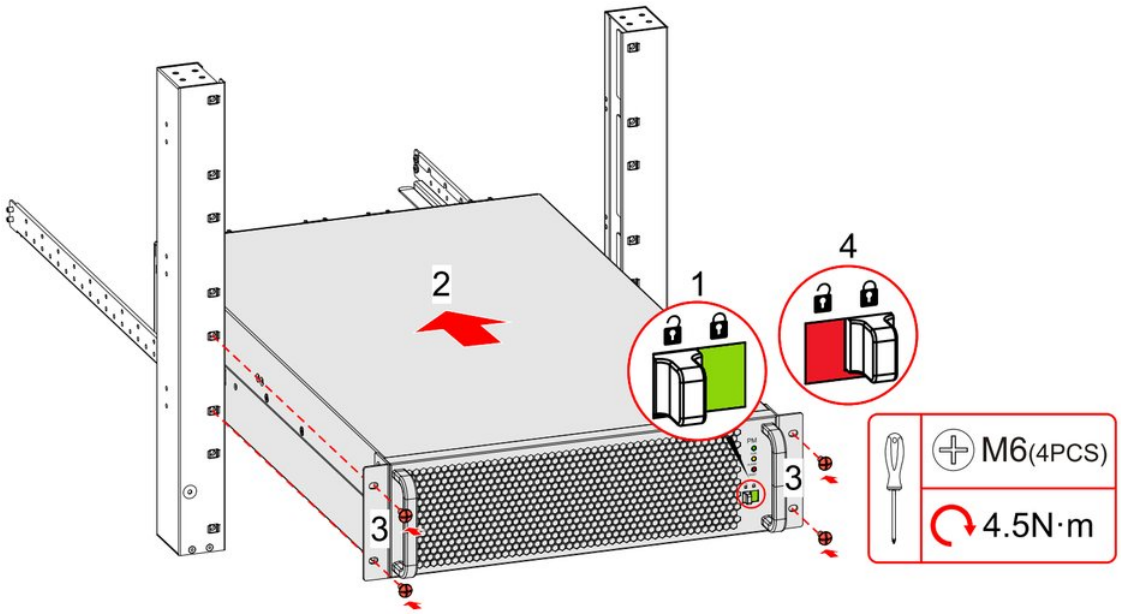

FIGURE 6-4 Install power module

4 Close the front door of UPS.

6.3 Maintenance Guide

6.3.1 UPS Maintenance

WORKING ENVIRONMENT CHECKLIST

No.	Item	Acceptance criteria	Solution	Check interval
1	Device room environment	• The fireproof or device room and the air normally without • The device room and the device is direct ventilation environment. • There is no dust flammable ries device room.	of the rem closed, cond works interruption. ▯ Check method: Visual is airtight, inspection not in a ▯ Troubleshooting: Rectify the fault based on the acceptance criteria. or in the	Monthly
2	Rodent-proof	Rodent-proof res	are Check method: Visual Monthly	

No.	Item	Acceptance criteria	Solution	Check interval
		taken in the device room, such as rat guard and rat trap.	inspection • Troubleshooting: Rectify the fault based on the acceptance criteria.	
3	Heat dissipation space	The distance between the device and surrounding objects meet the space requirements.	• Check method: Visual inspection (using a measuring tape) • Troubleshooting: Rectify the fault based on the acceptance criteria.	Monthly
4	Installation position	There is no air outlet or refrigerant copper pipe of the air conditioner placed above the device, and no other water leakage risks exist.	• Check method: Visual inspection • Troubleshooting: Rectify the fault based on the acceptance criteria.	Monthly
5	Ambient temperature	Actual temperature: _____ °C (0 °C~40 °C)	• Check method: Visual inspection (using a hygrothermograph) • Troubleshooting: Check that the air conditioner runs properly.	Monthly
6	Ambient humidity	Actual humidity:_____% RH (0%RH–95%RH, non- condensing)	• Check method: Visual inspection (using a hygrothermograph) • Troubleshooting: Check that the air conditioner runs properly.	Monthly

COMPONENT CHECKLIST

No.	Item	Acceptance criteria	Solution	Check interval
1	Installation	The device is installed properly and arranged neatly, and screws are tightened.	• Check method: Visual inspection • Troubleshooting: Rectify the fault based on the acceptance criteria.	Monthly
2	Appearance	Wipe the device surface inspection using a white paper and the paper does not turn black. • The device is not rusty or deformed.	• Check method: Visual • Troubleshooting: Rectify the fault based on the acceptance criteria. Clean up the dust on the air filter or replace the air filter during dust removal.	Quarterly
3	Cabinet wire hole protection	The wire holes of the cabinet have been fully sealed using the standard sealing plates, and rodentproof measures are taken.	• Check method: Visual inspection • Troubleshooting: Rectify the fault based on the acceptance criteria.	Quarterly
4	Air outlet	The air outlet is not blocked.	• Check method: Visual inspection • Troubleshooting: Rectify the fault based on the acceptance criteria.	Quarterly
5	Metal scraps in the cabinet	There is no copper scrap or other foreign matter in the cabinet.	• Check method: Visual inspection • Troubleshooting: Rectify the fault based on the acceptance criteria.	Quarterly
6	Grounding wire	The grounding wire is reliably connected to the grounding bar in the device room, and the screws are tightened.	Check method: Visual Yearly inspection • Troubleshooting: Tighten the screws.	
7	Through current capacity	Switches and wires meet load requirements. The through current capacity of wires is greater than the switch specifications.	• Check method: Visual inspection • Troubleshooting: After the device is powered off, replace the switches or wires.	Yearly
9	Power wire	• The wires and insulation layer are intact. • The screws at the wire connection points are tightened, and the tightening marks on the screws do not deviate. • The wire connections are free from black marks and noticeable sparks.	• Check method: Visual inspection • Troubleshooting: After the device is powered off, replace the wires or fasten the screws.	Yearly
10	Signal wire	• The wires and insulation layer are intact. • Signal wire terminals are securely connected.	• Check method: Visual inspection • Troubleshooting: Replace the wires.	Yearly

RUNNING STATE CHECKLIST

No.	Item	Acceptance criteria	Solution	Check interval
1	Grid	• Input voltage: 380VAC/400VAC/415VAC (line voltage) • Output voltage: 380VAC/400VAC/415VAC ±1% (line voltage) • Input frequency: 40Hz~70Hz	• Check method: Visual inspection (View the running information on the touch screen.) • Troubleshooting: If the input voltage is normal, check the grid state or correct the input wire connection. If the output voltage is abnormal, check the alarm information on the touch screen and rectify the fault.	Monthly
2	Working state	The state icons on the touch screen indicate that all units are operating properly, all operating parameters are within their normal ranges, and no fault or alarm information is displayed.	• Check method: Visual inspection (Check the system state on the touch screen.) • Troubleshooting: Check the alarm information on the touch screen and rectify the fault.	Monthly
3	Parameter setting	The configuration of the output voltage grade, frequency, number of batteries, and battery capacity meets requirements.	• Check method: Visual inspection • Troubleshooting: Correct the parameter settings.	Quarterly
4	State record	The three-phase load rate and output power factor are recorded.	Check method: Visual Quarterly inspection (Check the system state on the touch screen.) • Troubleshooting: Equalize the three-phase loads.	

6.3.2 Lead-Acid Battery Maintenance

WORKING ENVIRONMENT CHECKLIST

No.	Item	Acceptance criteria	Solution	Check interval
1	Device room environment	• The fireproof door of the device room remains closed, and the air conditioner works normally without interruption. • There is no dust or flammable sundries in the device room.	• Check method: Visual inspection • Troubleshooting: Rectify the fault based on the acceptance criteria.	Monthly
2	Rodent-proof	Rodent-proof measures are taken in the device room, such as rat guard and rat trap.	• Check method: Visual inspection • Troubleshooting: Rectify the fault based on the acceptance criteria.	Monthly
3	Installation position	There is no air outlet or refrigerant copper pipe of the air conditioner placed above the device, and no other water leakage risks exist.	• Check method: Visual inspection • Troubleshooting: Rectify the fault based on the acceptance criteria.	Monthly
4	Ambient temperature	Actual temperature: _____ °C(20 °C~30 °C)	• Check method: Visual inspection (using a hygrothermograph) • Troubleshooting: Check that the air conditioner runs properly.	Monthly
5	Ambient humidity	Actual humidity: _____% RH (30%RH–80%RH, non- condensing)	• Check method: Visual inspection (using a hygrothermograph) • Troubleshooting: Check that the air conditioner runs properly.	Monthly

COMPONENT CHECKLIST

No.	Item	Acceptance criteria	Solution	Check interval
1	Installation	The device is installed properly and arranged neatly, and screws are tightened.	• Check method: Visual inspection • Troubleshooting: Rectify the fault based on the acceptance criteria.	Monthly
2	Appearance of the battery rack or cabinet	No dust, rust, or deformation exists.	• Check method: Visual inspection • Troubleshooting: Rectify the fault based on the acceptance criteria.	Monthly
3	Battery appearance	• Batteries are clean and free from stains. • Battery wiring terminals are intact. • Batteries are intact and free of damage, deformation, bulges, and cracks. • Batteries have no acid or electrolyte leakage. (If electrolyte leakage occurs, there will be a pungent smell.)	• Check method: Visual inspection • Troubleshooting: contact AEC technical support	Monthly
4	Metal scrap	There is no copper scrap or other conductive foreign matter.	• Check method: Visual inspection • Troubleshooting: Rectify the fault based on the acceptance criteria.	Monthly
5	Grounding wire of the battery rack or cabinet	The grounding wire is reliably connected to the grounding bar in the device room, and the screws are tightened.	• Check method: Visual inspection • Troubleshooting: Tighten the screws.	Yearly
6	Battery wires	• The wires and insulation layer are intact. • The screws at the wire connection points are tightened, and the tightening marks on the screws do not deviate. • The wire connections are free from black marks and noticeable sparks.	• Check method: Visual inspection • Troubleshooting: After the device is powered off, replace the wires or fasten the screws.	Quarterly
7	Battery connection reliability	• After the equipment is powered off, check the reliability of each connection point from positive terminals to negative terminals. All points are connected reliably. • In copper bar check, use a torque wrench to check the tightening torque for each battery screw. The torque meets the requirements of the battery manufacturer. After checking that the battery screws meet the requirements, mark the screws for later check.	• Check method: (1) Visual inspection (2) Verify (After the device is powered off, use an insulated torque wrench to verify the torque of screws.) • Troubleshooting: Rectify the fault based on the acceptance criteria.	Yearly

RUNNING STATE CHECKLIST

No.	Item	Acceptance criteria	Solution	Check interval
1	Working status	The touch screen shows that all batteries are running properly, battery running parameters are within their normal ranges, and no battery fault or alarm information is displayed.	• Check method: Visual inspection (Check the system state on the touch screen.) • Troubleshooting: View the alarm information on the touch screen and handle the alarm.	Monthly
2	Battery management parameters	Battery management parameter settings and battery charge and discharge conditions meet the requirements of the battery manufacturer. The battery operating temperature is lower than the ambient temperature plus 20°C.	• Check method: Visual inspection (Check the parameters displayed on the touch screen.) • Troubleshooting: Correct the parameter settings or rectify battery operating temperature abnormality.	Quarterly
4	Battery voltage	Battery equalized voltage=Cell equalized charge voltage (2.35V/cell±0.02V/cell)×6x +/-12V number of batteries • Battery floating voltage= Cell floating voltage (2.27V/cell±0.02V/cell)×6x +/- 12V number of batteries	• Check method: Quarterly (1) Visual inspection (Check the parameters displayed on the touch screen.) (2) Measure (Use a multimeter to measure the output voltage of the battery pack) • Troubleshooting: Correct the equalized charge voltage and floating charge voltage of UPS. If the difference between the battery pack voltage displayed on the touch screen and the measured value is greater than 1%, contact AEC technical support.	
5	Standard test (suggestion)	During standard test, no fault or alarm is displayed on the touch screen.	• Check method: Perform a standard test and view the alarm information on the touch screen. • Troubleshooting: View the alarm information on the touch screen and handle the alarm.	Quarterly
6	Depth test (suggestion)	During depth test, no fault or alarm is displayed on the touch screen.	• Check method: Perform a depth test and view the alarm information on the touch screen. • Troubleshooting: View the alarm information on the touch screen and handle the alarm.	Yearly

6.3.3 Li-battery Maintenance

WORKING ENVIRONMENT CHECKLIST

No.	Item	Acceptance criteria	Solution	Check interval
1	Device room environment	• The fireproof door of the device room remains closed, and the air conditioner works normally without interruption. • There is no dust or flammable sundries in the device room.	• Check method: Visual inspection • Troubleshooting: Rectify the fault based on the acceptance criteria.	Monthly
2	Rodent-proof	Rodent-proof measures are taken in the device room, such as rat guard and rat trap.	• Check method: Visual inspection • Troubleshooting: Rectify the fault based on the acceptance criteria.	Monthly
3	Installation position	There is no air outlet or refrigerant copper pipe of the air conditioner placed above the device, and no other water leakage risks exist.	• Check method: Visual inspection • Troubleshooting: Rectify the fault based on the acceptance criteria.	Monthly
4	Ambient temperature	Actual temperature: _____ °C(20 °C~30 °C)	• Check method: Visual inspection (using a hygrothermograph) • Troubleshooting: Check that the air conditioner runs properly.	Monthly
5	Ambient humidity	Actual humidity: _____% RH (30%RH–80%RH, non- condensing)	• Check method: Visual inspection (using a hygrothermograph) • Troubleshooting: Check that the air conditioner runs properly.	Monthly

COMPONENT CHECKLIST

No.	Item	Acceptance criteria	Solution	Check interval
1	Installation	The device is installed properly and arranged neatly, and screws are tightened.	• Check method: Visual inspection • Troubleshooting: Rectify the fault based on the acceptance criteria.	Monthly
2	Appearance of the battery rack or cabinet	No dust, rust, or deformation exists.	• Check method: Visual inspection • Troubleshooting: Rectify the fault based on the acceptance criteria.	Monthly
3	Battery appearance	• Batteries are clean and free from stains. • Battery wiring terminals are intact. • Batteries are intact and free of damage, deformation, bulges, and cracks.	• Check method: Visual inspection • Troubleshooting: contact AEC technical support	Monthly
4	Metal scrap	There is no copper scrap or other conductive foreign matter.	• Check method: Visual inspection • Troubleshooting: Rectify the fault based on the acceptance criteria.	Monthly
5	Grounding wire of the battery rack or cabinet	The grounding wire is reliably connected to the grounding bar in the device room, and the screws are tightened.	Check method: Visual Yearly inspection • Troubleshooting: Tighten the screws.	
6	Battery wires	• The wires and insulation layer are intact. • The screws at the wire connection points are tightened, and the tightening marks on the screws do not deviate. • The wire connections are free from black marks and noticeable sparks.	• Check method: Visual inspection • Troubleshooting: After the device is powered off, replace the wires or fasten the screws.	Quarterly
7	Battery connection reliability	• After the equipment is powered off, check the reliability of each connection point from positive terminals to negative terminals. All points are connected reliably. • In copper bar check, use a torque wrench to check the tightening torque for each battery screw. The torque meets the requirements of the battery manufacturer. After checking that the battery screws meet the requirements, mark the screws for later check.	• Check method: (1) Visual inspection (2) Verify (After the device is powered off, use an insulated torque wrench to verify the torque of screws.) • Troubleshooting: Rectify the fault based on the acceptance criteria.	Yearly

RUNNING STATE CHECKLIST

No.	Item	Acceptance criteria	Solution	Check interval
1	Working status	The touch screen shows that all batteries are running properly, battery running parameters are within their normal ranges, and no battery fault or alarm information is displayed.	• Check method: Visual inspection (Check the system state on the touch screen.) • Troubleshooting: View the alarm information on the touch screen and handle the alarm.	Monthly
2	Battery management parameters	Battery management parameter settings and battery charge and discharge conditions meet the requirements of the battery manufacturer. The battery operating temperature is lower than the ambient temperature plus 20°C.	• Check method: Visual inspection (Check the parameters displayed on the touch screen.) • Troubleshooting: Correct the parameter settings or rectify battery operating temperature abnormality.	Quarterly
4	Battery voltage	Battery equalized voltage=Cell equalized charge voltage (3.50V/cell±0.02V/cell)×+/- number of batteries	• Check method: (1) Visual inspection (Check the parameters displayed on the touch screen.) (2) Measure (Use a multimeter to measure the output voltage of the battery pack) • Troubleshooting: Correct the equalized charge voltage of UPS. If the difference between the battery pack voltage displayed on the touch screen and the measured value is greater than 1%, contact AEC technical support.	Quarterly
5	Standard test (suggestion)	During standard test, no fault or alarm is displayed on the touch screen.	• Check method: Perform a standard test and view the alarm information on the touch screen. • Troubleshooting: View the alarm information on the touch screen and handle the alarm.	Quarterly
6	Depth test (suggestion)	During depth test, no fault or alarm is displayed on the touch screen.	• Check method: Perform a depth test and view the alarm information on the touch screen. • Troubleshooting: View the alarm information on the touch screen and handle the alarm.	Yearly

6.4 Battery Test

6.4.1 Standard Test

Shallow discharge the battery. The battery cannot be used when it is not running for a long time. To verify the health of battery, perform a discharge test on the battery without mains power failure.

> **NOTE**
>
> Before performing the standard test, please ensure:
>
> - UPS mains input is normal.
> - Battery is connected properly.
> - Battery is in floating charge state.
> - Load ratio is not less than 15%.

PROCEDURE

1. Tap the icon in the main page of the touch screen, set "Battery test time" in "Battery setting> Manage 1" to "10".

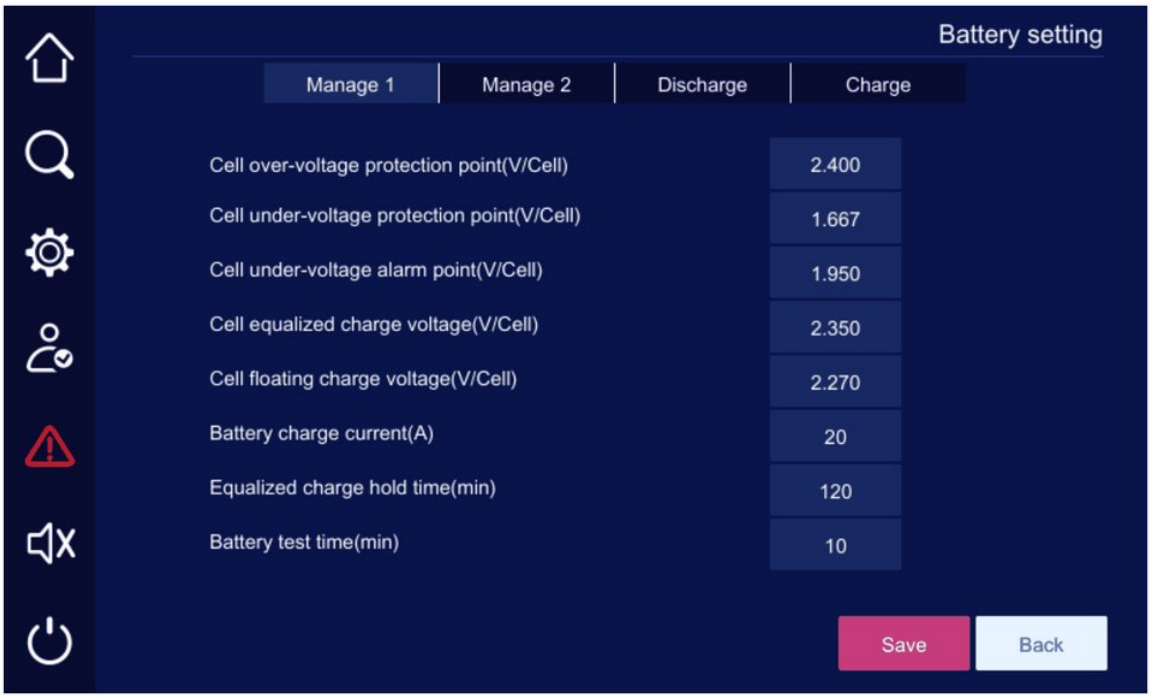

FIGURE 6-5 Battery test time setting

2. Tap the icon in the main page of the touch screen, tap "Battery test>Standard test" to start test.

> **NOTE**
>
> When the battery test meets the following conditions, the standard test will be exited automatically.
>
> - Battery voltage is lower than the battery voltage alarm point.
> - Mains voltage is lower than the rated mains voltage * 0.9.
> - No output or output overload.
> - There has an abnormal alarm.

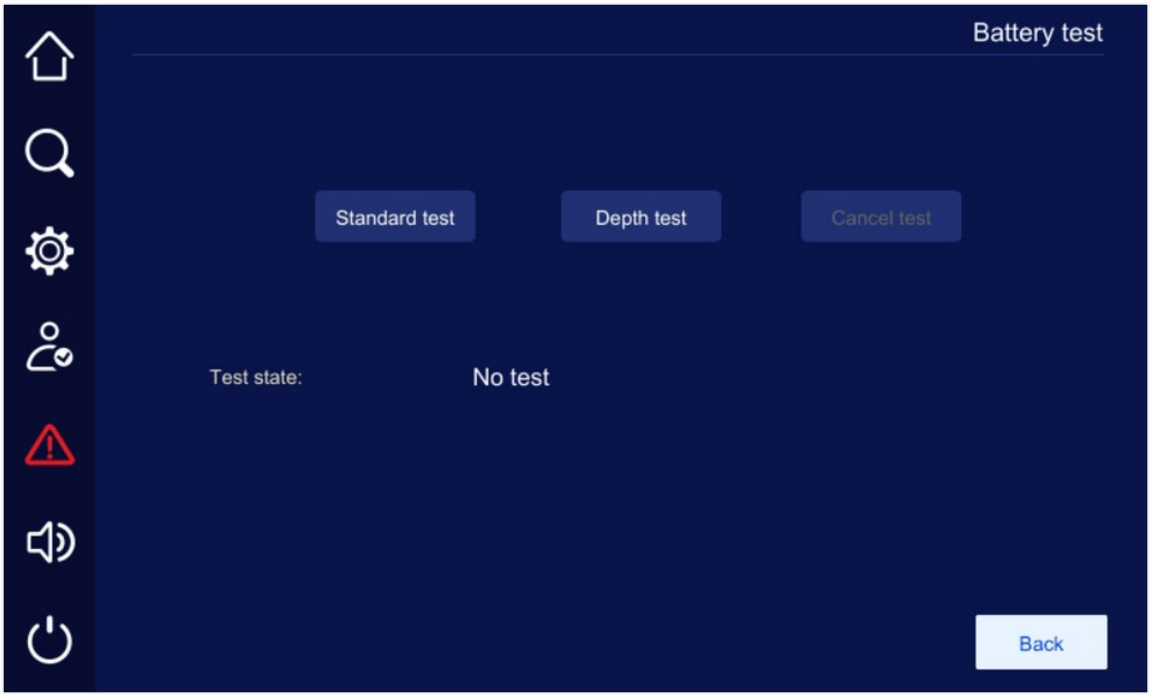

FIGURE 6-6 Standard test

6.4.2 Depth Test

Depth discharge the battery. Discharge battery to the under-voltage alarm point. You can learn more about the battery performance and the battery health via depth discharge.

> **NOTE**
> Before performing the depth test, please ensure:
>
> - UPS mains input is normal.
> - Battery is connected properly.
> - Battery is in floating charge state.
> - Load ratio is not less than 15%.

Tap the icon in the main page of the touch screen, tap " Battery test>Depth test " to start test.

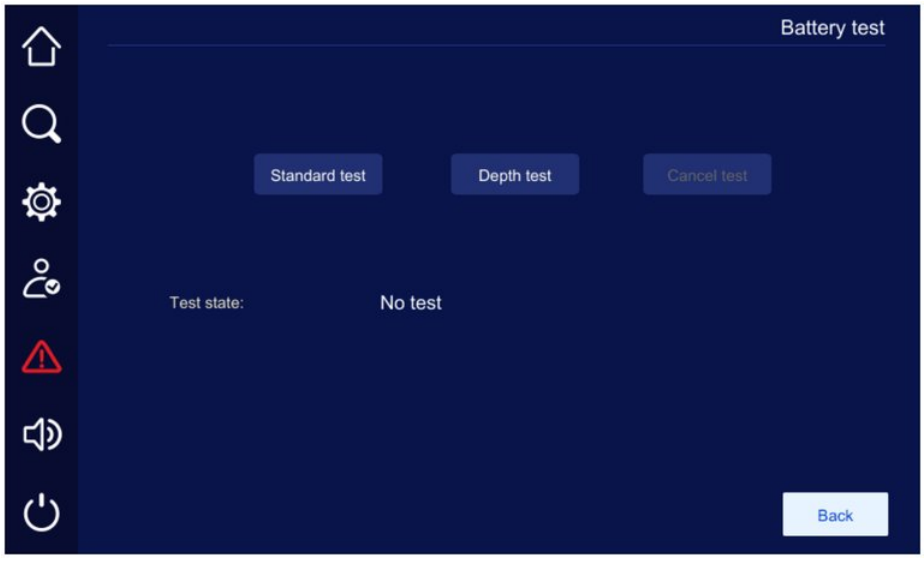

FIGURE 6-7 Depth test

NOTE

When the battery test meets the following conditions, the depth test will be exited automatically.

- Battery voltage is lower than the battery voltage alarm point.
- Mains voltage is lower than the rated mains voltage * 0.9.
- No output or output overload.
- There has an abnormal alarm.

6.5 Troubleshooting

6.5.1 UPS Troubleshooting

CAUTION

- If UPS is faulty, alarm information is displayed on the touch screen. UPS can be powered on only after critical alarms are handled. Failing to do so may escalate faults or damage the device.
- Do not remove alarms by reinstalling modules.
- Remove a faulty module after confirming that it needs to be replaced. After removing the module, do not insert it into UPS again.

TABLE 6-1 Solutions to common faults

No.	Symptom	Possible cause
1	Mains is normal, but UPS works in battery inverter state, the buzzer beeps intermittently.	The contacts and sockets of grid circuit connected to UPS are not in good contact, resulting in poor AC power input.
2	UPS installation is complete, switch on mains switch or power switch will burn off the insurance or trip.	The three-phase input wires or three-phase output wires are wrongly connected, such as neutral wire and grounding wire or live wire and grounding wire (chassis) connected to reverse.
3	UPS outputs 230V AC power after startup, but UPS works in bypass state.	• The connected load capacity exceeds the rated output capacity of UPS. Reduce load or use a UPS with a larger output capacity. • If the temporary bypass is caused by the load boot impact and automatically recovers, it is still normal.
4	UPS output is normal after startup, but UPS stops output immediately after the load is started.	• UPS is seriously overloaded or the output circuit is short- circuited, reduce the load to an appropriate amount or find out the cause of short-circuit. It is common for the output adapter to short-circuit or the input short-circuit fault occurs after the device is damaged. • If the load is not started in the order of "large power load→small power load", UPS should be restarted. After UPS runs stably, start loads in the order of "large power load→small power load".
5	UPS works normally after startup, UPS automatically shuts down after a period of time.	In the battery power supply state, the battery under-voltage protection occurs when the battery runs out, system automatically shuts down. This phenomenon is normal. When mains recovers, system will automatically start and charge battery. Warning: If the battery stays in under-voltage state for a long time, it will influence the battery service life. After taking battery under-voltage protection, if mains cannot restore for a long time, please switch off the battery switch to protect battery, and restart UPS and fully charge the battery once mains recovers.

TABLE 6-1 Solutions to common faults *(continued)*

No.	Symptom	Possible cause
6	UPS works normally after startup for a long time, the buzzer keeps beeping and the touch screen displays the battery under-voltage.	UPS works in the battery inverter state for the grid voltage is too low. Finally, the battery is under-voltage and takes the under- voltage protection.
7	UPS outputs normally when mains is available. UPS has no output when mains is not available.	• Battery fault or battery pack has been seriously damaged. • Charger fault. Usually, the battery cannot be charged, resulting in insufficient battery power. • Battery wire is not connected or terminal contact is poor. • Battery wire is not well connected or the contact of wire terminal is poor. Battery wire is improperly connected or the wiring terminal is improperly connected • Battery switch is not switched off. • UPS is not restarted after serious overload occurs, causing UPS is still in bypass output state.
8	Buzzer keep beeping, UPS switches to bypass power supply.	See the fault information on the touch screen.
9	Mains is present, but the buzzer beeps intermittently.	The mains voltage or frequency exceeds the allowable range of UPS.
10	In the mains state, UPS works normally. However, after the mains power failure, UPS works normally but the user device stops working.	Poor grounding engineering, resulting in the floating voltage between the neutral wire and grounding wire is too high.
11	Fault indicator on a power module is on.	The power module is faulty. Replace the power module.

6.5.2 Emergency Measures in Case of Failure

- Emergency measures when the system fails

When the system fails, shut down the inverter. If necessary, shut down the user load and switch off the input/output switch of UPS. To ensure that UPS does not further damage, and notify an engineer or technical personnel to repair.

- Emergency measures when a power module fails

When a power module fails,

When a power module fails, the power module will be automatically isolated from system, which generally will not affect the normal operation of system, but will reduce the redundancy of power module. At this time, place the ready switch of the power module in  state, remove it from the cabinet, and notify AEC technical support to have the faulty power module repaired.

⚠ CAUTION

After the power module is unplugged, there is still high voltage inside the power module and on its rear cover connector pins, Wait for a long time (≥15 minutes) before opening the cover for maintenance.

CHAPTER 7

07 Removing and Discarding UPS

IN THIS CHAPTER

7.1 Removing UPS
7.2 Discarding UPS

7.1 Removing UPS

CAUTION

After UPS is shut down for 15 minutes, check that there is no voltage or current via multimeter and clamp-on ammeter, wear protective equipment, and then perform UPS operation.

NOTE

Before removing UPS, power off both AC and DC.

PROCEDURE

1. Disconnect all electrical connections of UPS by referring to **3.7.2 UPS Connection.**
2. If UPS needs to be used again in the future, make storage preparations. For storage requirements, see **1.9 Storage Requirements**.

7.2 Discarding UPS

Users are responsible for handling UPS.

WARNING

Discard UPS according to local regulations and standards to avoid property damage or personal injury.

CAUTION

Some components of UPS may cause environmental pollution. Discard UPS according to the electrical waste disposal regulations on the installation site.

APPENDIX A

A Technical Specifications

IN THIS CHAPTER

A.1 UPS Technical Specifications
A.2 Component Technical Specifications

A.1 UPS Technical Specifications

A.1.1 Physical and Electrical Specifications

PHYSICAL SPECIFICATIONS

Item ⌄ Model ›	IST6-200	IST6-300	IST6-400	IST6-500
Wiring mode	Top wiring		Compatible with top and bottom wiring	
Mains and bypass with same power	Support mains and bypass with same power			
Size (Width×depth×height) (mm)	(601±2)x(861±2)x(2000±2)		(1200±2)x(861±2)x(2000±2)	
Weight (UPS without power modules) (kg)	224	236	459	506
Ambient temperature (°C)	0~40			
Storage temperature (°C)	-25~55			
Relative humidity	0% RH~95%RH (non-condensing)			
Altitude (m)	Not more than 2000m, if the altitude is more than 2000m, it must be derated according to IEC 62040-3 standard.			

SYSTEM SPECIFICATIONS

Item	Specifications
System efficiency	Up to 97%
Manual maintenance bypass	Maintenance bypass switch with no transfer time
External isolation transformer function	Isolation transformer of the same capacity at the output is available.
Backfeed protection function	Equipped (Manually enable this function. For details, see Table 2-9 **Output dry contact definition**)
Distribution System	TN-S, TN-C, TN-C-S, TT Note: It does not support the three-phase three-wire triangular grounding power supply.
Communication function	Dry contact, RS232, MODBUS, SNMP (optional)
Electromagnetic compatibility	Complies with IEC 62040-2
Cooling method	Forced air cooling
Noise (dB)	<70 (1m from the front of device)
Protection grade	IP20
Protection level	I
Pollution level	II

MAINS INPUT SPECIFICATIONS

Item	Specifications
Power supply system	3φ4W+PE
Rated input voltage (VAC)	380/400/415 (line voltage)
Input voltage range (VAC)	138~485: 324~485 without derating, 173~323 linearly derated from 100% load to 10%±3% load, 138~173 with 10%±3% load
Rated input frequency (Hz)	50/60
Input frequency range (Hz)	40~70
Input PF	≥0.99
Input THDi	Full load:≤1.5%
Over-voltage level	III

BYPASS INPUT SPECIFICATIONS

Item	Specifications
Power supply system	3φ4W+PE
Bypass input voltage (VAC)	304~438
Bypass synchronization tracking range (Hz)	50±5/60±6
Over-voltage level	III

BATTERY INPUT SPECIFICATIONS

Item		Specifications
Battery type		• Lead-acid battery • Li-battery (optional)
Lead-acid battery	Rated battery voltage (VDC)	±240
	Battery voltage (VDC)	±180~±300
	Number of batteries	2V battery, 180~300 cell/pack. The standard number of batteries 240 cell/pack. • For 216~228 cell/pack: Output power derated to 0.9. • For 192~204 cell/pack: Output power derated to 0.8. • For 180 cell/pack: Output power derated to 0.75. • For 240~300 cell/pack: Output power is not derated.
	Cell equalized charge voltage	It can be set from 2.300V/cell to 2.470V/cell. Default is 2.350V/cell.
	Cell floating charge voltage	It can be set from 2.167V/cell to 2.300V/cell. Default is 2.270V/cell.
Li-battery	Rated battery voltage (VDC)	±256
	Battery voltage (VDC)	±192~294.4
	Number of batteries	120~200cell/pack. The standard number of batteries is 160cell/pack. • 120~138cell/pack: Output power derated to 0.8. • 140~158cell/pack: Output power derated to 0.9. • 160~200cell/pack: Output power is not derated.
	Cell equalized charge voltage	It can be set from 3.40V/cell to 3.55V/cell. Default is 3.50V/cell.
Charge limit coefficient		• Lead-acid battery: It can be set from 0.05C to 0.50C. Default is 0.20C. • Li-battery: It can be set from 0.05C to 1.00C. Default is 0.50C.
Charge current (A)		30 (max. charge current of a module) *N (N is module number.). Default is 20.
Shared battery pack mode		Equipped
Battery cold start function		Equipped

OUTPUT SPECIFICATIONS

Item	Specifications
System	3Ph+N+PE/3Ph+PE (optional)
Voltage (VAC)	380/400/415±1%
Frequency (Hz)	• Normal mains, tracking bypass input. • Abnormal mains, device is 50±0.1 or 60±0.1.
Output voltage stability accuracy	≤1%
Output voltage phase deviation	• Balanced resistive load≤1° • Unbalanced resistive load≤3°
Waveform distortion (THDv)	• Linear load≤1% • Nonlinear load≤4%
Bypass inverter transfer time (ms)	• Sync<1ms • Out of sync<15ms
Mains battery transfer time	0ms
Inverter overload capacity	• Linear load (PF=1.0) Load rate≤105%, long-term running. 105%<load rate≤110%, turn to bypass after 60min. 110%<load rate≤125%, turn to bypass after 10min. 125%<load rate≤150%, turn to bypass after 1min. Load rate>150%, turn to bypass immediately. • Non-linear load (PF=0.9) Load rate≤105%, long-term running. 105%<load rate≤110%, turn to bypass after 60min. Load rate>110%, turn to bypass immediately. • Non-linear load (PF=0.8) Load rate≤105%, long-term running. Load rate>105%, turn to bypass immediately.
Bypass overload capability	• Load rate≤130%, long-term running. • 130%<load rate≤150%, maintain 5min. • 150%<load rate≤200%, maintain 1min. • 200%<load rate≤300%, maintain 100ms. • Load rate>300%, protect immediately.
Inter-module equalized current accuracy	≤5%
Output DC component	-200mV~+200mV
Dynamic voltage transient range	The load varies between 0% to 100% or 100% to 0%, and its output voltage is less than 5%.
Voltage transient recovery time	≤20ms
Output PF	It can be set from 0.8 to 1.0. Default value is 1.0.
Load unbalance capability	It can withstand 100% unbalanced loads.

A.1.2 Parallel Specifications

Item	Specifications
Max. paralleled UPS number (unit)	8
Parallel current imbalance	≤5%
Parallel ECO function	Equipped

A.1.3 Protection Specifications

Item	Specifications
Input over-voltage protection	Equipped
Input under-voltage protection	Equipped
Output short circuit protection	Equipped
Output over-voltage protection	Equipped
Output under-voltage protection	Equipped
Output overload protection	Equipped
Output overtemperature protection	Equipped
Battery under-voltage protection	Equipped
Communication abnormal protection	Equipped

A.1.4 Standard Specifications

Item	Specifications
Product standard	IEC 62040-3:2021
Safety standard	IEC 62040-1:2017+AMD1:2021, IEC 62477-1:2022
EMC standard	IEC 62040-2:2016
Test standard	IEC 60068-2-1, IEC 60068-2-2, IEC 60068-2-78, IEC 60068-2-27, IEC 60068-2-6, IEC 60529
Torque standard	ISO 898-7

A.2 Component Technical Specifications

A.2.1 Power Module Technical Specifications

Item ⌄ Model ›	IST6-200	IST6-300	IST6-400	IST6-500
Rated capacity (kVA)	50			
Size (Width×depth×height) (mm)	500×650×130			
Weight (kg)	39			

A.2.2 Bypass Module Technical Specifications

Item ⌄ Model ›	IST6-200	IST6-300	IST6-400	IST6-500
Rated capacity (kVA)	200	300	400	500
Size (Width×depth×height) (mm)	440×575×130			440×615×200
Weight (kg)	23	32	32	50

A.2.3 System Control Box Technical Specifications

Item ⌄ Model ›	IST6-200	IST6-300	IST6-400	IST6-500
Size (Width×depth×height) (mm)	440×175×75			
Weight (kg)	5			

- Specifications are subject to change without prior notice.

Dimensions and weights

Overall dimensions in millimetres (W × D × H) and net weights, from the technical data of this manual. Leave the clearances given in the installation chapter around the UPS.

IST6-200 / IST6-300
cabinet (tolerance ±2 mm)



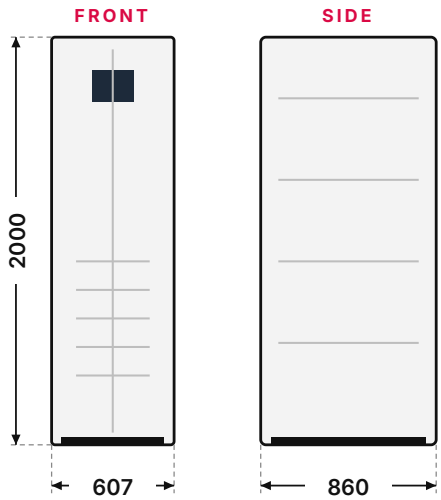

W × D × H	607 × 860 × 2000 mm
IST6-200, without power modules	224 kg
IST6-300, without power modules	236 kg
Power module 50 kW (each)	39 kg

IST6-400 / IST6-500
cabinet (tolerance ±2 mm)



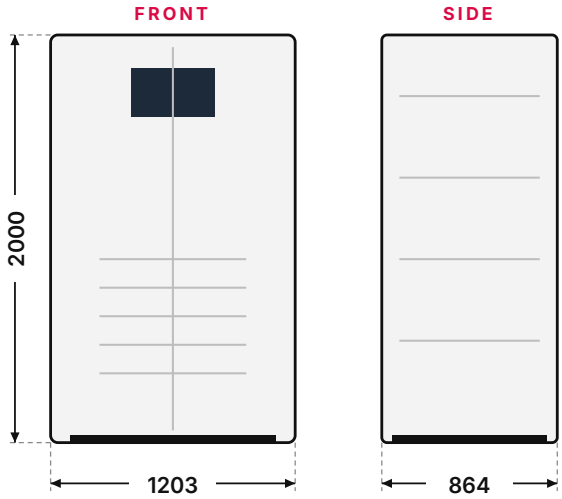

W × D × H	1203 × 864 × 2000 mm
IST6-400, without power modules	459 kg
IST6-500, without power modules	506 kg
Power module 50 kW (each)	39 kg

APPENDIX B

B Acronyms and Abbreviations

Acronym	Meaning
AC	Alternating Current
BMS	Battery Management System
DC	Direct Current
ECO	Economy mode
EMC	Electromagnetic Compatibility
EPO	Emergency Power Off
ESD	Electrostatic Discharge
HMI	Human-Machine Interface
IEC	International Electrotechnical
LED	Light-emitting Diode
NC	Normally Closed (contact)
PE	Protective Earth
PF	Power Factor
PFC	Power Factor Correction
RCD	Residual-Current Device
RMS	Root Mean Square
RS232	Recommended Standard 232
RS485	Recommended Standard 485
SCR	Silicon-Controlled Rectifier
SNMP	Simple Network Management Protocol
SPD	Surge Protective Device
STS	Static Transfer Switch
THDi	Total Harmonic Current Distortion
THDv	Total Harmonic Voltage Distortion
UPS	Uninterruptible Power Supply

More on the AEC partner portal

PARTNER PORTAL

portal.emea.aecups.com

- 3D models of every UPS
- Diagrams and drawings
- Video tutorials
- Manuals and catalogues, always up to date

WHATSAPP SUPPORT

+39 393 080 5211

Technical support 24/7. Scan the code to write to AEC service.

AEC International Srl
Via Nerviano 55 · 20045 Lainate (MI) · Italy

Sales +39 02 9415 8991 · info@aecups.com
Service +39 393 080 5211 · service@aecups.com