AEC
Technology Behind Power

USER MANUAL

IST6

30–120 kVA

Modular online double-conversion UPS, three-phase



English

Read this manual before installing and using the UPS.
Keep it for future reference.

AEC-UM-IST6-120-EN
Rev. 01 · 11/2026

OVERVIEW

Contents

	About this manual	**3**
1	**Safety Description**	**4**
1.1	Safety Instructions	4
1.2	Operation and Maintenance Requirements	7
1.3	Environment Requirements	8
2	**Overview**	**9**
2.1	Product Intro	9
2.2	Features	10
2.3	Working Principle	11
2.4	Appearance and Structure	13
2.5	Optional Accessory	21
2.6	Alarm Function	28
3	**Installation**	**35**
3.1	Installation Process	35
3.2	Installation Preparation	36
3.3	Transporting, Unpacking and Checking	39
3.4	Mechanical Installation	40
3.5	Electrical Connection	52
3.6	Parallel System Connection	56
3.7	System Check and Test	57
4	**Touch Screen Operation**	**59**
4.1	Menu Hierarchy	59
4.2	Main Page	61
4.3	System Work Status Display	62
4.4	Buzzer Control Function	66
4.5	Monitor Page	67
4.6	Set Manage	70
4.7	Information Manage	76
4.8	ON/OFF	81
5	**Use and Operation**	**82**
5.1	Instructions for Use	82
5.2	Operation Process	82
5.3	ON/OFF Operation	82
5.4	Parallel System ON/OFF Operation	87
6	**Maintenance and Troubleshooting**	**90**
6.1	Maintenance Guide	90
6.2	Battery Maintenance	91
6.3	Battery Replacement Safety	91
6.4	Troubleshooting	91
7	**Package, Transportation and Storage**	**94**
7.1	Package	94
7.2	Transportation	94
7.3	Storage	94
A	**Technical Specifications**	**95**
	Dimensions and weights	97
B	**Physical Characters**	**98**
C	**Acronyms and Abbreviations**	**99**

BEFORE YOU START

About this manual

This manual describes the AEC IST6 30–120 kVA UPS: modular online double-conversion UPS, three-phase. It covers the features, controls, installation, operation, maintenance, transport and storage. Read it before you start, and keep it with the UPS for future reference.



IST6-30 … IST6-120

4 × 30 kW hot-swappable power modules	**≧ 0.99** input power factor
95 % system efficiency	**0 ms** bypass ↔ inverter transfer, synchronised

MODELS COVERED

- IST6-30, IST6-60, IST6-90 and IST6-120: the IST6-120 cabinet with 1, 2, 3 or 4 power modules of 30 kW (IST6-PM30)
- N+1 versions (IST6-30-N1 … IST6-120-N1): one more power module, redundant; bypass module IST6-BM120

WHO THIS MANUAL IS FOR

Installers, electricians, IT and facility staff who install, operate and maintain the UPS. Electrical installation and any work inside the UPS must be done by qualified personnel, in line with IEC 60364 and the local wiring rules.

Safety messages

Safety messages in this manual follow ISO 3864 / ANSI Z535. The signal word tells how serious the hazard is.

DANGER	A hazardous situation which, if not avoided, **will** result in death or serious injury.
WARNING	A hazardous situation which, if not avoided, **could** result in death or serious injury.
CAUTION	A hazardous situation which, if not avoided, could result in minor or moderate injury, or in damage to the equipment.
NOTE	Additional information that stresses or completes the text.
TIP	A hint that helps you solve a problem or save time.

Numbers in red circles on a picture are explained in the table or list that follows it. References in red, such as Figure 2-1 or Table 3-1, are links in the PDF. Figures are for reference only: the actual product may differ in detail.

Up and running

The short version: each step points to the full instructions. Read the safety chapter first.

1. **Read the safety instructions.** See Section 1.1, Safety Instructions.
2. **Unpack and check the delivery.** See Section 3.3, Transporting, Unpacking and Checking.
3. **Choose the place and prepare the cables and breakers.** See Section 3.2, Installation Preparation.
4. **Install and connect the UPS.** See Section 2.5.6, Top Wiring Accessory.
5. **Start the UPS.** See Section 5.3.2, Start UPS.
6. **Check the display and the settings.** See Section 4.3, System Work Status Display.
7. **Look after the UPS.** See Section 5.3.5, Switch to Maintenance Bypass Mode From Mains Mode.

CHAPTER 1

01 Safety Description

This chapter describes the safety notices. Before performing any work on the UPS, read this user manual carefully to avoid personal injury and damage to the device caused by improper operation.

IN THIS CHAPTER

1.1 Safety Instructions

1.2 Operation and Maintenance Requirements

1.3 Environment Requirements

AT A GLANCE **The safety rules of this chapter**



High voltage inside, also after the UPS is switched off: wait before opening it.



Installation, opening and service by qualified personnel only.



Batteries: never short-circuit them, keep them from fire, use only the specified type.



Electrostatic-sensitive boards: wear an earthed wrist strap.



Earth the UPS before connecting anything else.



No liquids or foreign objects inside the UPS.



In case of fire use a dry-powder extinguisher, never water or liquid.



Keep the air inlets and outlets free; respect the clearances.

1.1 Safety Instructions

This section mainly describes the safety announcements when operation and maintenance. For details, please refer to safety description in relevant chapters.

CAUTION

Before operating the UPS, read the safety notices and operating instructions in this section carefully to avoid accidents.

The promptings in the user manual, such as "Danger", "Warning", "Caution", etc. don't include all safety announcements. They are just only the supplement of safety announcements when operation.

NOTE

Any device damage caused by violating the general safety operation requirements or safety standards of design, production, and usage will be out of guarantee range.

1.1.1 Safety Instructions

CAUTION

The input and output of the UPS is dangerous high voltage, once operate improperly, it may endanger human safety. Please read this manual carefully before installing or operating, and pay attention to the warning labels. Do not dismantle the cover plate of the UPS unless authorized person.

DANGER

Don't touch terminals or conductors that connected with grid to avoid lethal risk!

DANGER

Device damage or device fault may cause electric shock or firing!

- Before operating, inspect the device for damage or any other hazard.
- Check that the external devices and circuit connections are safe.

WARNING

Touching high voltage and mains directly or through damp objects will lead to lethal risk.

DANGER

During a lightning storm, it is strictly prohibited to perform high voltage and AC operation, as well as in the tower or the mast. The atmosphere will generate a strong electromagnetic field in a lightning storm. Therefore, in order to avoid device struck by lightning, lightning protection and grounding system should be prepared in time.

WARNING

The UPS output mustn't connect the half-wave rectifier load or inductive load, such as air- conditioner, hair drier, starter, electric drill, motor, daylight lamp, etc.

WARNING

Do not reversely connect the grounding wire and neutral wire, live wire and neutral wire, which will cause short circuit.

It should be well grounded and the voltage between ground wire and neutral wire should be not more than 5V.

WARNING

Please do not put fingers or tools into the rotating fans to avoid human injury or device damage.

WARNING

In case of fire, use a dry-powder extinguisher. Do not use liquid extinguishers: risk of electric shock.

CAUTION

Keep good ventilation! Ensure that the air inlet and outlet and fan are not blocked.

⚠ CAUTION

The UPS is the class C3 device. If UPS is applied for the low-voltage power supply system of all commercial areas, light industrial areas that supplies power for the residential building, it may need to take additional actions to avoid the interference.

⚠ CAUTION

When UPS is powered off, there still exists dangerous voltage. It should affix warning labels away from UPS location and the warning labels should include: 1. It supplies power for UPS. 2. Please disconnect UPS before wiring.

1.1.2 Instructions for Use for Battery

⚠ CAUTION

Use only batteries of the type specified by AEC; other batteries can damage the UPS.

Different brands and types of battery require different charging voltages. Before use, make sure that the charging voltage of the UPS matches the battery. If in doubt, consult AEC technical support.

⚠ WARNING

Battery work, especially battery wiring, must follow the instructions. Improper operation can damage the battery and cause personal injury.

- Never short-circuit the positive (+) and negative (-) terminals of the battery. All battery connections must be tightened. Never touch two battery terminals or two bare cable ends at the same time: this can damage the battery or cause injury.
- Prevent electrolyte leaking from battery. The metal objects and circuit board will be corroded by the overflowing electrolyte and it will result in device damage and circuit board short circuit.
- Keep the battery away from fire source and devices that easy cause spark to avoid danger or unnecessary loss.

1.1.3 ESD Protection

⚠ CAUTION

To prevent human electrostatic damaging sensitive components (such as circuit board), make sure that you wear a anti-static wrist strap before touching sensitive components, and the other end is well grounded.

1.1.4 Grounding Requirements

⚠ WARNING

The device must be grounded before wiring. The grounding terminal must be connected to earth.

- When installing, the UPS must be grounded first. When dismantling, the grounding wire must be removed at last;
- Don't damage the grounding conductor;
- The UPS must be connected to protection grounding permanently. Before operation, check the electrical connection to ensure the UPS is grounded reliably.

1.1.5 Warning Mark Setting

In order to avoid accident for the unwanted person gets close to the UPS or makes improper operation, observe the following requirements while installing, maintaining or repairing.

- Set warning marks where the switches are to avoid switching them on improperly.
- Set warning signs or safety warning belt in the operation area, which is to avoid human injury or device damage.
- After maintenance, please pull out the key of the UPS and save it properly.

1.2 Operation and Maintenance Requirements

There exists high temperature and high voltage inside the UPS. Please comply with the relevant safety regulations and operation procedures during installation, operation and maintenance to avoid human injury or device damage. The safety precautions mentioned in the user manual are just as a supplement to the local safety regulations.

⚠ CAUTION

The related operation and wiring for the UPS should be performed by qualified professionals, and ensure the electrical installation accords with the electrical installation standards.

The installation and maintenance man should be trained, know about each safety announcement, get the right operation method, and then, the installation, operation and maintenance can be done.

⚠ DANGER

Never connect or disconnect power cables while the power is on. Switch off the power switches before connecting or disconnecting power cables. Before connecting, make sure that the cable connections and cable labels match the actual installation.

- Only authorized professionals are allowed to open the UPS! The input and output of the UPS are dangerous high voltage. Touching high voltage will lead to lethal risk.
- Before maintenance, please disconnect the AC power and battery to isolate the power input. It is better to measure the input terminals of UPS by a voltmeter to ensure the input power is disconnected and in a safe condition.
- Even if all external powers are disconnected, there still exists residual electric charge on the capacitor inside the UPS, and the output terminals may exist high voltage which may endanger human life. It is necessary to set the UPS aside for enough time (≥10 min) to release all charge before opening the UPS chassis.
- The battery circuit isn't isolated with AC input. There may exist dangerous voltage between battery terminals and grounding terminals. Battery group exists dangerous high voltage. Pay attention to the insulation when installing and using the battery.
- Do not wear conductive objects such as watches, bracelets or rings while working.

⚠ WARNING

Do not drill holes in the cabinet! Drilling can damage internal components, and metal swarf can short-circuit the circuit boards.

NOTE

Any change to the UPS configuration, structure or assembly affects UPS performance. Consult AEC before making any change.

1.3 Environment Requirements

DANGER

Do not put the UPS in the environment where has inflammable, explosive gas or smog. Don't do any operation in this environment.

It's dangerous to operate UPS in the explosive environment, please strictly observe the environment requirements in the user manual when using and storing UPS.

The environment requirements of UPS are as follows.

- Meet the UPS operation specification (operating temperature: -5 °C~40 °C, relative humidity: 0%~95%).
- Keep good ventilation and far away from water source, heat source and inflammable and explosive objects.
- The altitude should not exceed 2000m. If the altitude exceeds 2000m, it should reduce the rated power according to IEC 62040-3.
- Please avoid using UPS in the following environment for a long time.
  - The place where has direct sunshine or near a heat source.
  - The place where has metallic conductive dust.
  - The place where has direct sunlight, dust, volatile gas, corrosive material or high salt.

02

CHAPTER 2

Overview

This chapter mainly introduces the UPS features, working principle, working mode, operation panel, appearance, optional components, alarm function, etc.

IN THIS CHAPTER

2.1 Product Intro
2.2 Features
2.3 Working Principle
2.4 Appearance and Structure
2.5 Optional Accessory
2.6 Alarm Function

THE UPS AT A GLANCE



Front: touch screen and status



Door open: modules and switches



Rear

2.1 Product Intro

The IST6-120 is the online double-conversion UPS system, that consists of cabinet, power module, bypass module, system control box and distribution unit. The modular design is convenient for user to add, decrease or replace the power module online, which will not affect the UPS operation. It's a high performance sine-wave UPS that specially designed for the network computer room and precision instrument of financial, communication, insurance, transportation, tax, army, security, energy source, education, government, enterprise, etc.

> **NOTE**
> IST6-120 has four power modules and a redundancy slot. UPS can select a redundancy module to improve UPS reliability. The detailed configuration is as shown in Table 2-1.

TABLE 2-1 Configuration description

Item	IST6-120
Switch configuration	Full configuration(4 pieces)
30 kW power module	4 × 30 kW
Redundancy module slot	1 piece
Power module height	2U
Bypass module height	3U
UPS dimensions(mm)	600*860*2000
Wiring method	Bottom wiring in default. It's compatible with top wiring(select the top wiring component).
Remark	The power module order is 1 to 5 from bottom to top, see the labels in the side of cabinet.

2.2 Features

HOT SWAPPABLE

The power module adopts the none-principle-subordinate parallel control technique, each power module is independent and do not need to match each other strictly. They can be put into use or exit online at will, which achieves the online hot maintenance. The system has high adaptability, availability, expandability and low cost.

THREE-LEVEL INVERTER TECHNOLOGY

Adopts three-level inverter technology, which makes the quality of output voltage wave better and the efficiency of whole UPS higher.

COMPLETELY DIGITALIZED DSP CONTROL

Adopt the completely digitalized DSP control for the inverter control, phase synchronization, output current-sharing, logic control of the power module, which is with high precision, high speed and perfect whole system performance.

ENERGY CONSERVATION AND HIGH EFFICIENCY

Adopt the advanced PFC control technology, the input power factor is greater than 0.99, which greatly improves the use ratio of electric energy and reduces the load of grid, and saves the cost of power distribution. The size of whole UPS is small, and the weight is light, calorific value is small, which enhances the use ratio of environment and decreases the investment cost.

SMART FAN SPEED CONTROL

The fan speed is adjusted automatically in accordance with the load status to prolong fan life and reduce noise.

ECO ENERGY CONSERVATION MODE DESIGN

The UPS is designed with the ECO energy conservation mode. When the grid is good, if the UPS operates in this mode, the bypass prior to output, and the efficiency can be up to 99%. When the bypass voltage or frequency is out of normal range and cannot satisfy the user’s power supply requirement, it will switch to inverter output, and this guarantees the reliability of power supply and also, save energy.

MANUAL MAINTENANCE BYPASS DESIGN

It designs the manual maintenance bypass channel to ensure the UPS supplies power for load while maintenance, which greatly improve the system operation reliability and maintainability.

RELIABLE EMC PERFORMANCE

Pass the authority institution and professional test on EMC, including conducting disturbance, radioactive disturbance, conducting anti-disturbance, radioactive anti-disturbance, power falling, mass impulse, static discharging, surge, etc. The excellent EMC characteristics can completely filter each grid interference, and also, decrease and eliminate the interference of UPS itself effectively.

7 INCH TOUCH SCREEN DISPLAY

With 7 inch touch screen display, the operation is simple and convenient, which is convenient to daily manage and maintain the UPS. It can display the running parameters and running status of UPS and each power module, and record the history event and alarm information. It can store 10000 pieces of information at most.

2.3 Working Principle

2.3.1 Schematic Diagram

The schematic diagram of the IST6-120 is as shown in Figure 2-1.

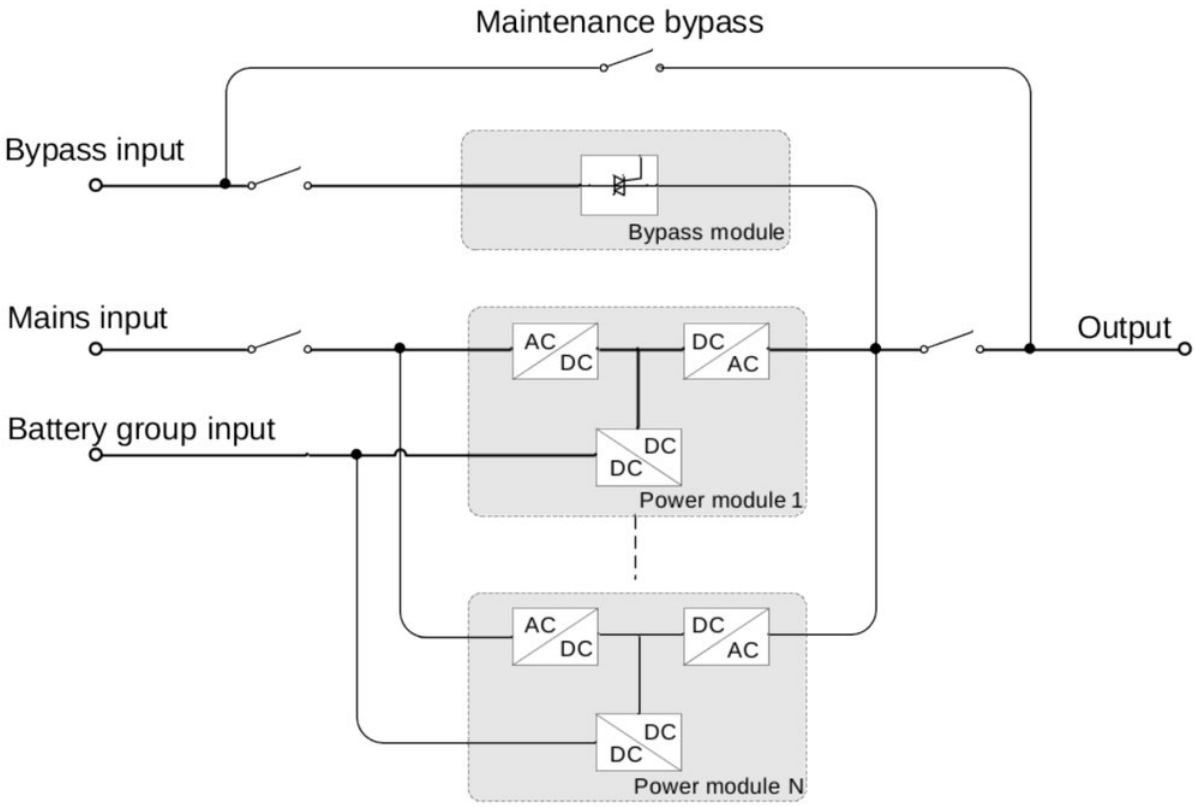

FIGURE 2-1 Schematic diagram

2.3.2 Working Mode

HOW IT WORKS **Operating modes at a glance**

Normal (online) mode

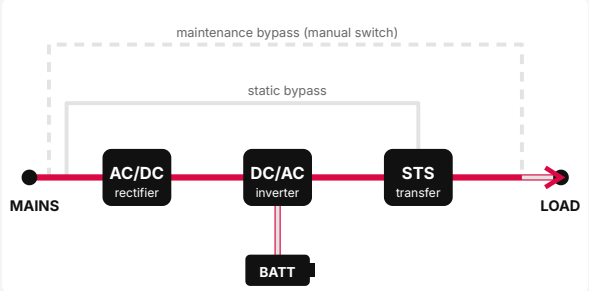

Mains present: the rectifier and the inverter supply the load with regulated power; the battery is kept charged.

Battery mode

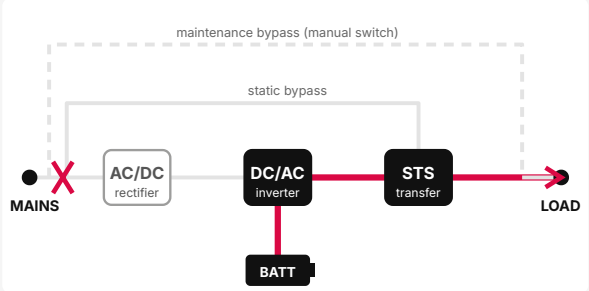

Mains outside its limits or missing: the battery feeds the inverter, with no break for the load.

Bypass mode

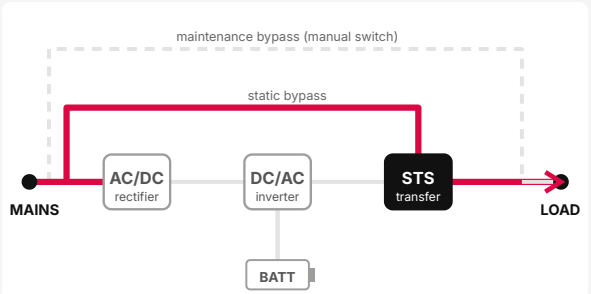

Overload, fault or inverter off: the load is supplied from the mains through the static bypass.

ECO mode

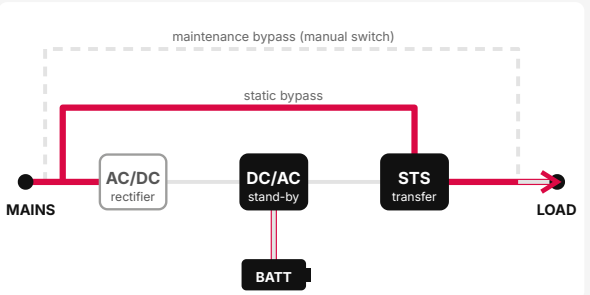

Mains inside the ECO window: the load runs on the bypass for the highest efficiency; the inverter takes over if the mains goes out of range.

Maintenance bypass

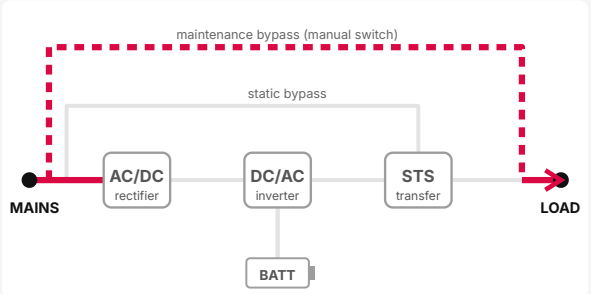

For service: the load is fed from the mains by the manual switch and the UPS can be switched off. Hazardous voltage stays on the terminals.

power flow working idle

The IST6-120 has four work modes: normal mains power supply mode, battery power supply mode, bypass power supply mode and maintenance bypass power supply mode.

NORMAL MAINS POWER SUPPLY MODE

When the mains is normal, AC power is transformed to DC power by PFC, and supplies power for inverter. While rectifier the AC power into DC power, the rectifier eliminates the abnormal noise wave, noise and unstable frequency, and make the inverter provides stable and clean power for load. The specific working process is as follows.

When the mains power supply is normal, the rectifier inside the power module will rectifier the mains to a positive and negative DC voltage, and the DC voltage gets through the inverter and then will output a stable 230 Vac AC voltage to supply power for the load. When the system detects that the inverter is normal, it will supply the inverter voltage to load.

BATTERY POWER SUPPLY MODE

When mains is abnormal, system will switch to battery input, the Boost circuit boosts the battery voltage to a certain value and then supplies the DC power for the inverter, that makes the AC output without interruption phenomenon and then protects the load. The specific working process is as follows.

When mains is abnormal at any time, the rectifier will switch to battery input immediately to keep the voltage of DC electrolysis, and the inverter will not power down. Before battery discharges completely, if mains recovers, the rectifier will switch to mains input and charge battery at the same time. During the switching between grid power supply and battery power supply, the inverter output cannot power down.

In the battery power supply mode, if mains does not recover normal all the time, and the battery energy is running out, the UPS will send sound & light alarm, stop inverter working at the min. battery discharge value, long beep to alarm, and the load will power down.

BYPASS POWER SUPPLY MODE

When system is abnormal (such as over-temperature, short-circuit, output voltage abnormal or overload, and exceed the inverter bearing range), the inverter will shut down to avoid damage automatically. If mains still is normal at this time, it will turn to bypass to supply power for load. The specific work process is as follows.

If the inverter circuit fault or inverter overload and exceeds the bearing range, the UPS will turn to bypass to output. During bypass power supply, if fault or overload is removed, the UPS will start inverter and begin to supply power for load. When the load is serious overload and exceeds the bypass bearing range, the UPS will close the bypass output, and it will cause load powering down. When load short-circuit, the UPS will switch to bypass to supply power from inverter. If the short-circuit is serious, the mains switch and bypass switch of UPS may trip out. After suffering the short-circuit fault, UPS will try to restart. If the short-circuit is removed, the UPS will switch to inverter; if the fault is not removed, the UPS will try to restart for 3 times. 3 times later, the UPS will turn to fault protection. At this time, it needs to power off or click the touch screen to shut down the UPS, and restart the UPS, and then, it will recover working.

MAINTENANCE BYPASS POWER SUPPLY MODE

When the UPS needs to be maintained and the power supply for load cannot be interrupted, user can shut down the inverter and make the UPS work in bypass status, then switch on the maintenance bypass switch and switch off the mains switch, bypass switch. During the switching of manual maintenance bypass, the AC power is supplied for load by maintenance bypass switch. At this time, the UPS has no electricity, maintainer can perform the maintenance safely.

2.4 Appearance and Structure

2.4.1 Appearance

The IST6-120 consists of cabinet, operation panel, power module, bypass module, system control box, distribution unit, etc. The appearance of the IST6-120 is as shown in Figure 2-2.

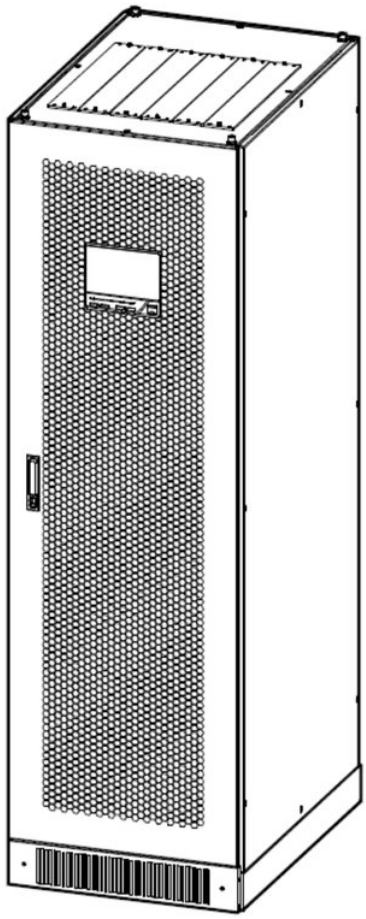

FIGURE 2-2 Appearance

OPERATION PANEL

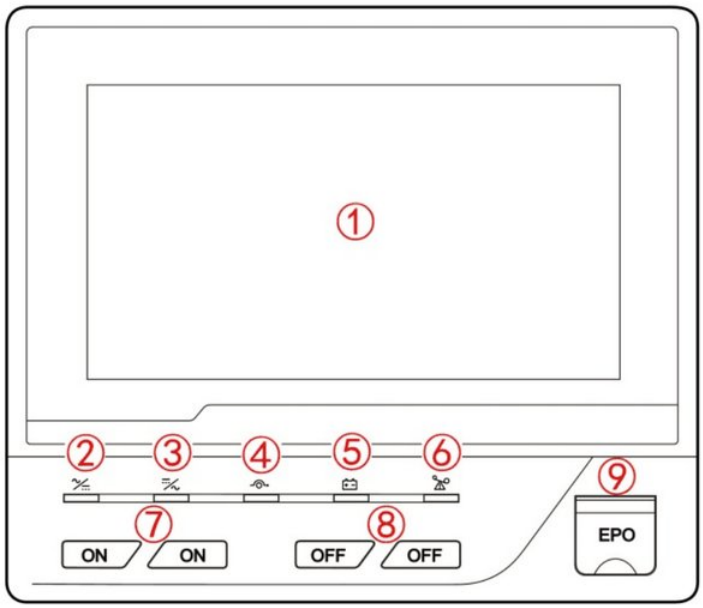

FIGURE 2-3 Operation panel

TABLE 2-2 Illustration of the operation panel

NO.	Name	Illustration
	Touch screen	Human-machine interactive interface
	AC/DC indicator	On (green): The rectifier works normally. On (red): The rectifier works abnormally.
	DC/AC indicator	On (green): The inverter works normally. On (red): The inverter works abnormally.
	BYP. indicator	On (green): Bypass outputs normally. On (red): Bypass is abnormal.
	BATT. LOW indicator	On (green):Battery power supply. On (red): Battery low-voltage.
	OVERLOAD indicator	On (green): Output normal. On (red): Output overload.
	ON combination button	Press the two buttons for 3s, power on UPS.
	OFF combination button	Press the two buttons for 3s, power off UPS.
	EPO button	Press the button to switch off the UPS output immediately.

2.4.2 Structure Layout

The structure layout of the IST6-120 is as shown in Figure 2-4.

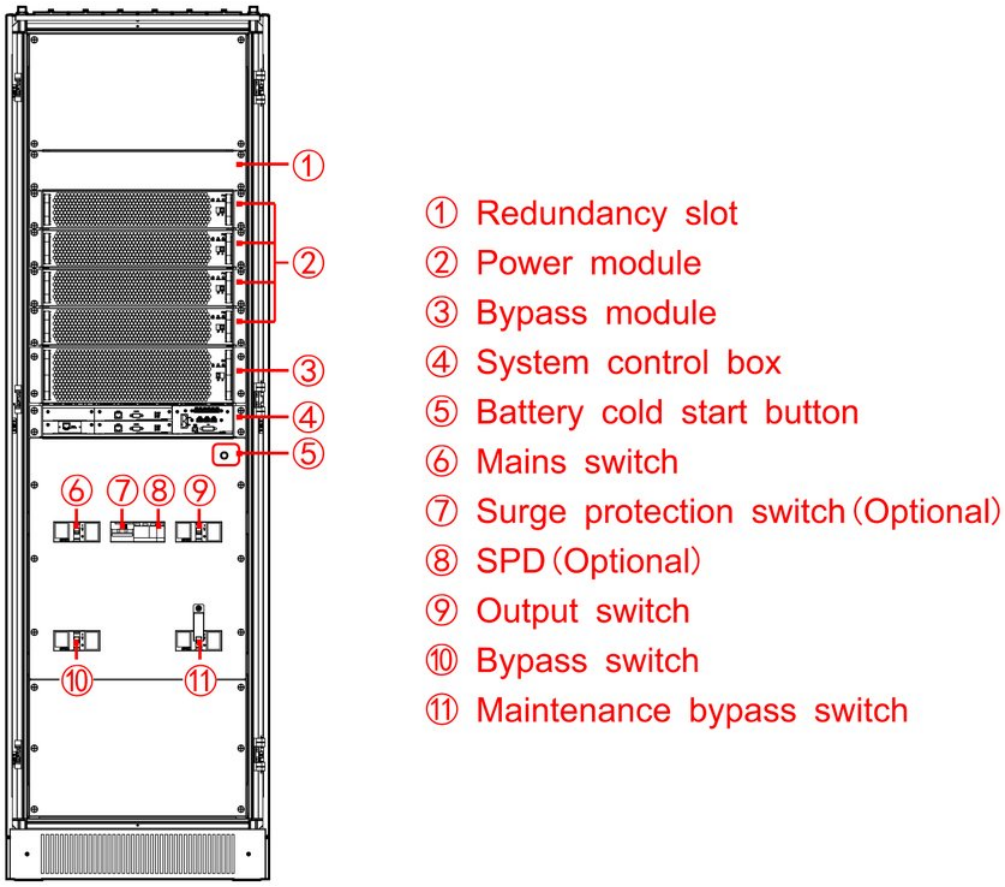

FIGURE 2-4 Structure layout of IST6-120 (open front door)

POWER MODULE

- Power module height: 2U
- Dimensions(H×W×D): 86mm×500mm×700mm(include hangers and handles)
- Weight: 24kg

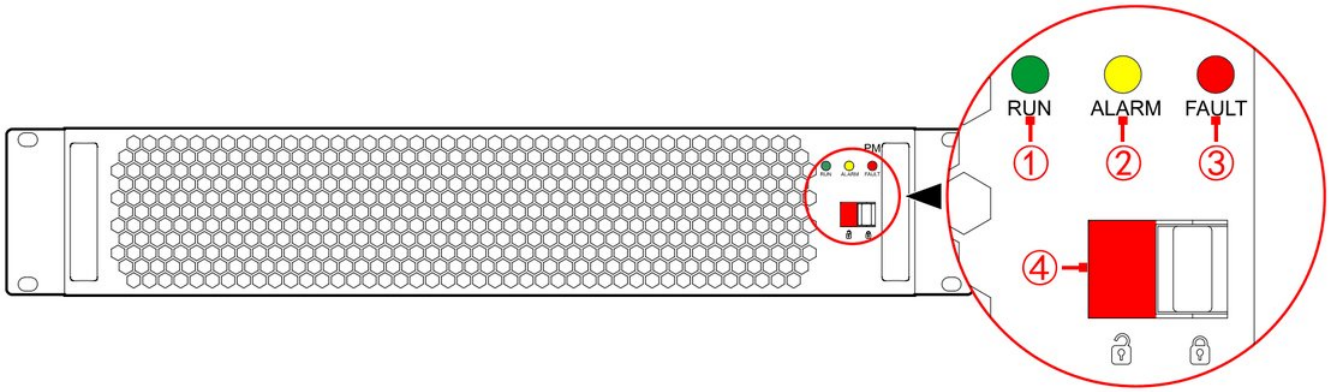

FIGURE 2-5 Front view of power module

TABLE 2-3 Illustration of the operation panel of the power module

NO. Name	Illustration
RUN indicator (green)	On: Power module stays in inverter status. Flicker: Power module stays in standby status.

NO.	Name	II
	ALARM indicator (yellow)	O Module input voltage abnormal, fan abnormal, overload, etc.
	FAULT indicator (red)	O Module fault.
	Ready switch	• Place the ready switch to “unlock” status, the indication color is green, the power module is not locked with the cabinet, and at this time, the power module can be dismantled. • Place the ready switch to “lock” status, the indication color is red, the power module is locked with the cabinet, and at this time, the power module cannot be dismantled.

BYPASS MODULE

- Bypass module height: 3U
- Dimensions(H×W×D): 130mm×500mm×635.5mm (include hangers and handles)
- Weight: 17kg

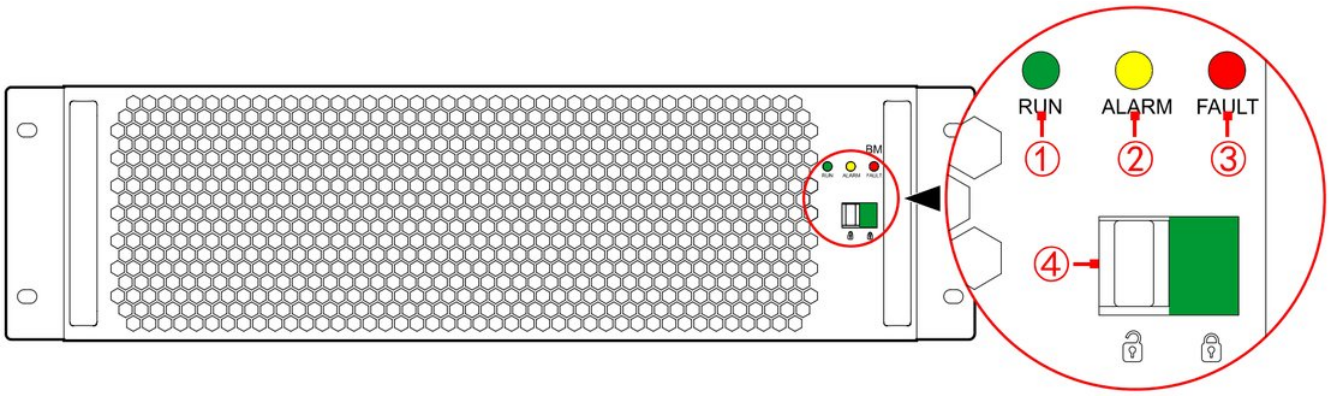

FIGURE 2-6 Front view of bypass module

TABLE 2-4 Illustration of the operation panel of the bypass module

NO.	Name	I
	RUN indicator (green)	O Bypass module is working.
	ALARM indicator (yellow)	O Module input voltage abnormal, fan abnormal, etc.
	FAULT indicator (red)	O Module fault.
	Ready switch •	• Place the ready switch to “unlock” status, the indication color is green, the power module is not locked with the cabinet, and at this time, the bypass module can be dismantled. Place the ready switch to “lock” status, the indication color is red, the bypass module is locked with the cabinet, and at this time, the bypass module cannot be dismantled.

SYSTEM CONTROL BOX

The system control box is as shown in Figure 2-7.

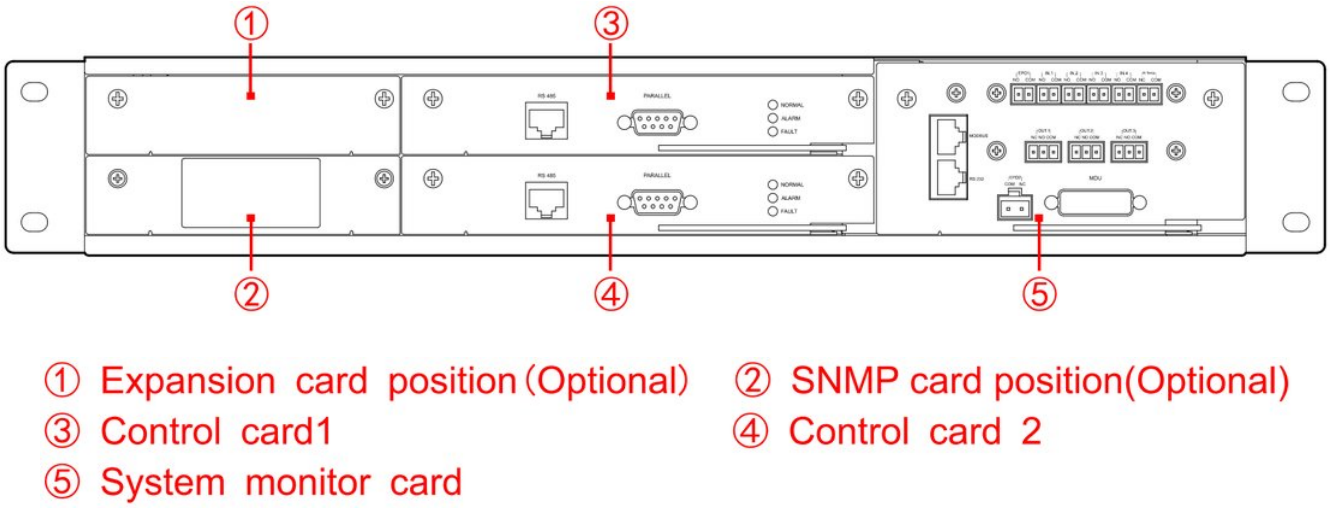

FIGURE 2-7 System control box

> **NOTE**
> The expansion card position is for dry contact expansion card or BMS expansion card. For details, refer to 2.5.2 Expansion Card.

- System control card

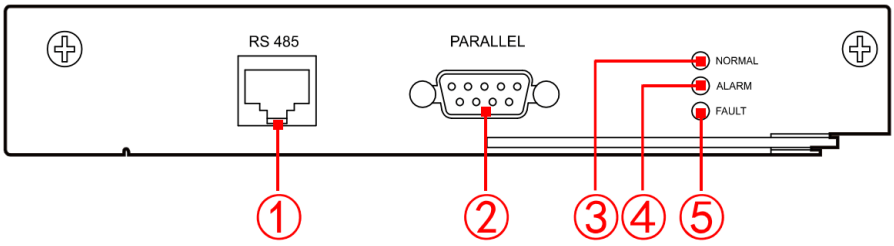

FIGURE 2-8 System control card

TABLE 2-5 Illustration of the system control card

NO.	Name	Illustration
	RS485 port	Realize the smart integrated display function. It is used for a UPS to monitor the running information of other parallel UPSs. The RS485 port adopts the RJ45 plug. The pin definition of the RS485 port is shown in

NO.	Na	Illustration
		Figure 2-9. In the parallel system, the RS485 connections are as shown in Figure 2-10 and Figure 2-11.
	PA port	Parallel ports connection among cabinets to realize the parallel/BSC function. When several UPSs are paralleled, connect the parallel ports of all UPSs with parallel cables. N UPSs require N parallel cables, so that each UPS has at least two parallel cables, which improves the reliability of the parallel system.
	NO ind	On: The system control card is in the running status of the main card. Flicker: The system control card is in the initialization status.
	ALA indicator (ye	On: The system control card has the alarm signal. Flicker: The system control card in the running status of the secondary card.
d)	FA indicator	On: System control card fault.

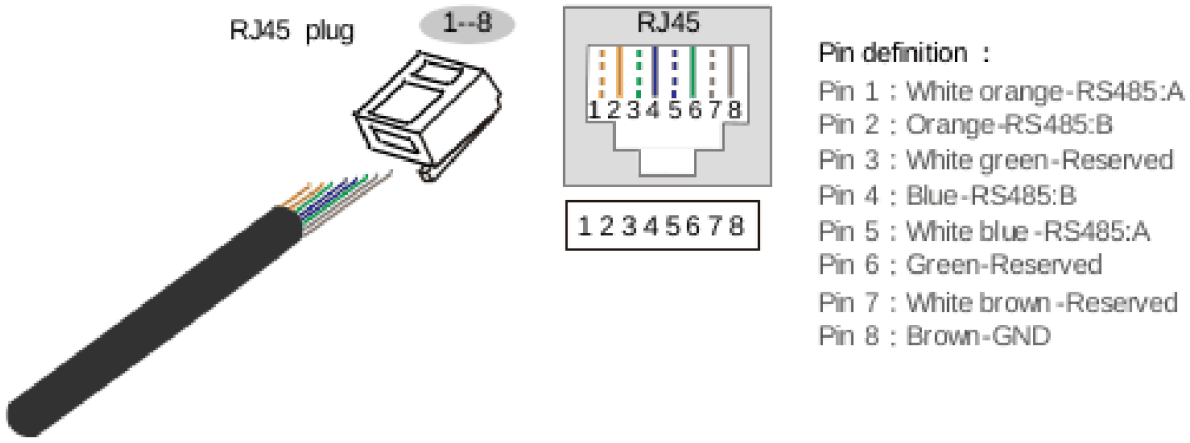

FIGURE 2-9 Pin definition of the RS485 port

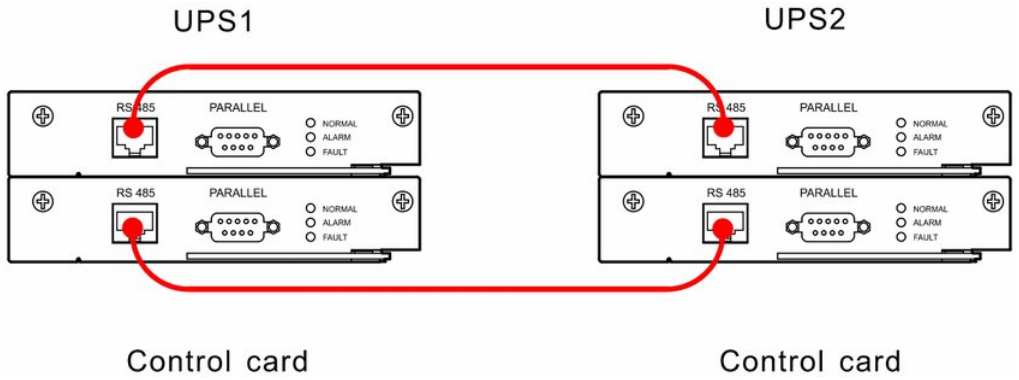

FIGURE 2-10 RS485 port connection(two UPSs)

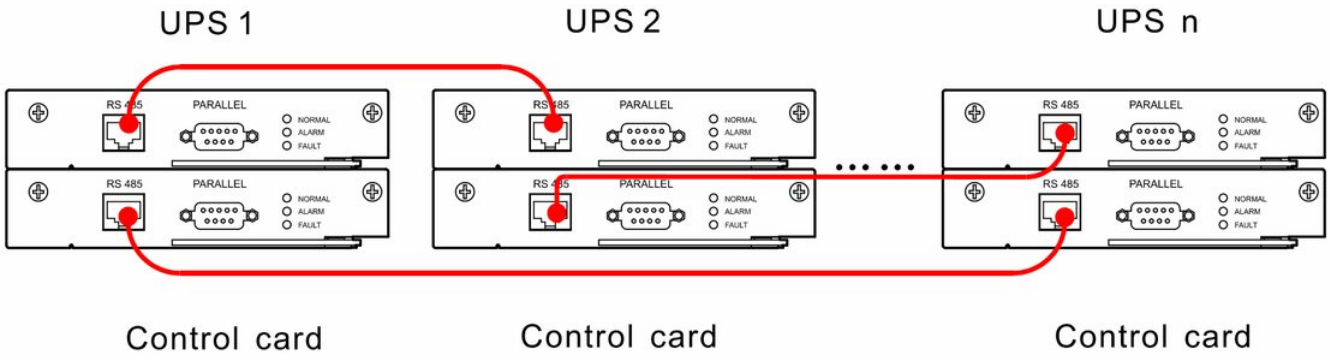

FIGURE 2-11 RS485 port connection(multiple UPSs)

- System monitor card

There is one human-machine interactive communication port, four input dry contact communication signals and three output dry contact signals(as shown in Figure 2-12), the illustration is as shown in Table 2-6.

There are two network ports on the system monitor card: MODBUS port and RS232 port.

1. The MODBUS port is used for MODBUS communication, which is to communicate with upper computer. The MODBUS port adopts RJ45 plug. The pin definition of the MODBUS port is shown in Figure 2-13

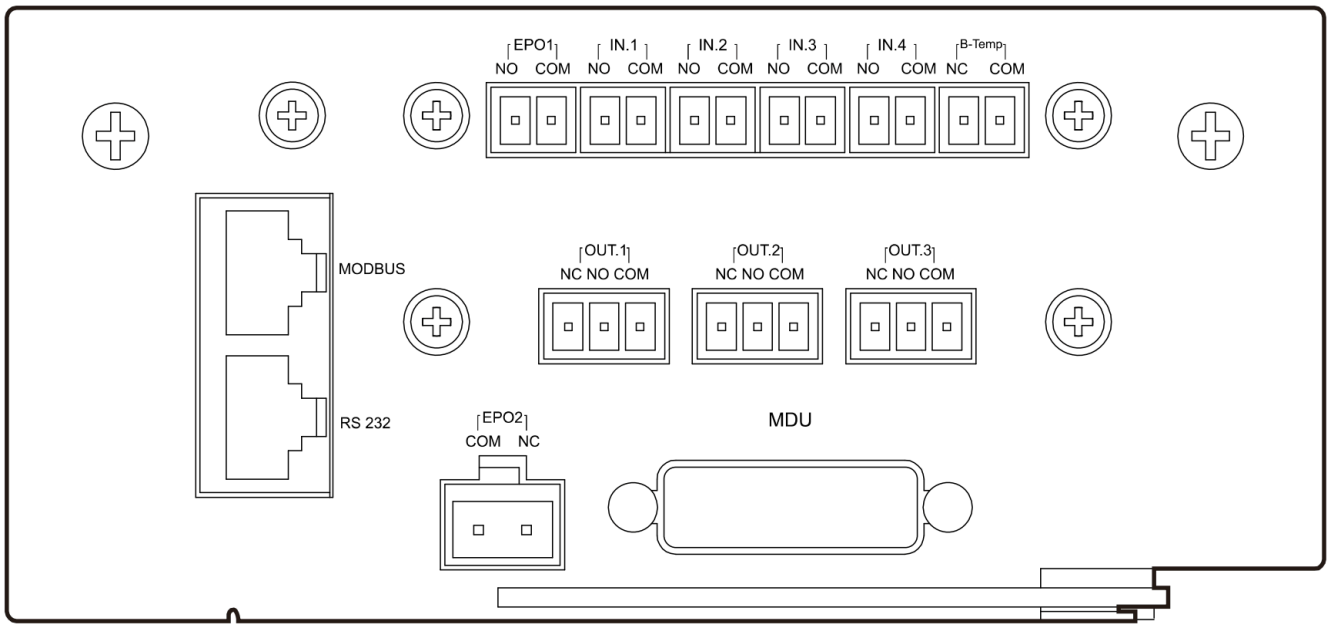

FIGURE 2-12 System monitor card

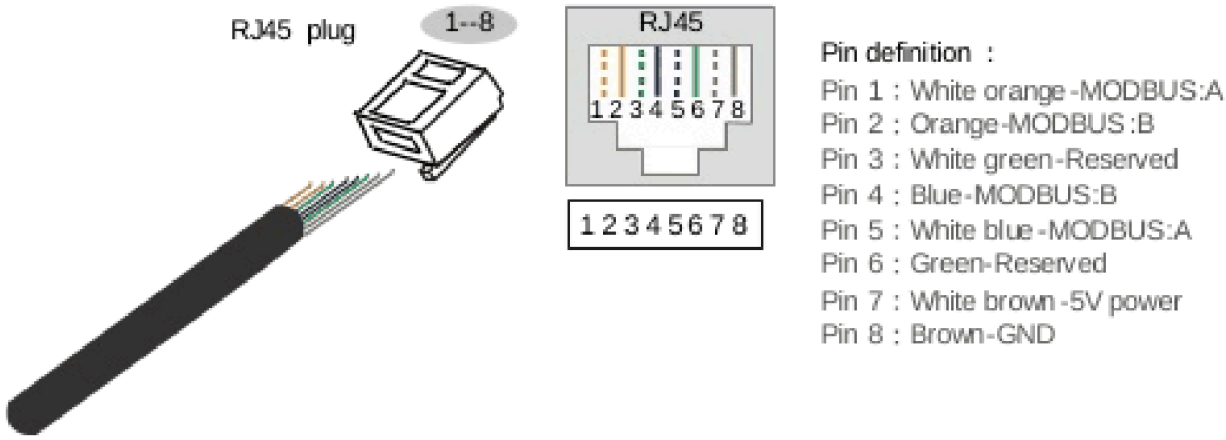

FIGURE 2-13 Pin definition of the MODBUS port

1. The RS232 port is used for RS232 communication, which is to achieve the external SNMP card communication. The RS232 port adopts the RJ45 plug. The pin definition of the RS232 port is shown in Figure 2-14.

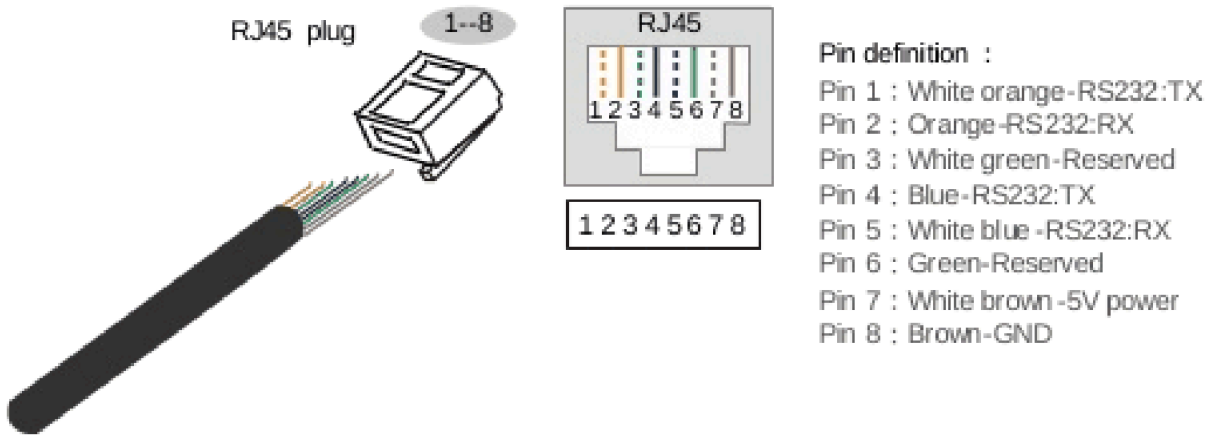

FIGURE 2-14 Pin definition of the RS232 port

The four input ports(IN port) on the system monitor card can be defined according to user requirements, as shown in the Table 2-7.

TABLE 2-6 Illustration of dry contact

Port	Mark	Signal	Illustration
EPO1	NO	External EPO normal open port	When the NO and COM is short circuit, the signal is effective. The signal is preset and isn't settable.
	COM	Common terminal (reinforced insulation from mains)	
B-Temp	NC	Battery temperature sensor (resistor) input	External temperature sampling wire. The signal is preset and isn't settable.
	COM	Common terminal (reinforced insulation from mains)	
EPO2	NC	External EPO normal close port	When the NO and COM disconnect, the signal is effective. The signal is preset and isn't settable. (When use, the CN8 in the monitor
	COM	Common terminal (reinforced	
		insulation from mains)	card should be connected through 2P jumper
OUT.1	NC	OUT.1 normal close output port	When the signal is effective, COM and NO connect, and NC disconnects. This signal is settable.
	NO	OUT.1 normal open output port	
	COM	Common terminal (reinforced insulation from mains)	
OUT.2	NC	OUT.2 normal close output port	When the signal is effective, COM and NO connect, and NC disconnects. This signal is settable.
	NO	OUT.2 normal open output port	
	COM	Common terminal (reinforced insulation from mains)	
OUT.3	NC	OUT.3 normal close output port	When the signal is effective, COM and NO connect, and NC disconnects. This signal is settable.
	NO	OUT.3 normal open output port	
	COM	Common terminal (reinforced insulation from mains)	
IN.1	NO	External switch normal open input port	When the NO and COM is short-circuit, the signal is effective. This signal is settable.
	COM	Common terminal (reinforced insulation from mains)	
IN.2	NO	External switch normal open input port	When the NO and COM is short-circuit, the signal is effective. This signal is settable.
	COM	Common terminal (reinforced insulation from mains)	
IN.3	NO	External switch normal open input port	When the NO and COM is short-circuit, the signal is effective. This signal is settable.
	COM	Common terminal (reinforced insulation from mains)	
IN.4	NO	External switch normal open input port	When the NO and COM is short-circuit, the signal is effective. This signal is settable.
COM	Common terminal (reinforced insulation from mains)		

TABLE 2-7 The definition of the input dry contact

NO.	Definition	Remark
1	Battery abnormal	When this signal is received, UPS alarms and records this status, and then turn off the charge function.
2	Battery grounding fault	Grounding fault signal.
3	Battery switch disconnected	Battery switch auxiliary contact.
4	Bypass switch disconnected	Bypass switch auxiliary contact.
5	Mains abnormal	Mains power failure signal, cooperate with auto generator mode to start the generator.
6	Input SPD abnormal	Input SPD abnormal, UPS records this event.

The three output ports(OUT port) on the system monitor card can be defined according to user requirements, as shown in the Table 2-8.

TABLE 2-8 The definition of the output dry contact

NO.	Definition	Remark
1	Inverter output	UPS is in the inverter output status, and this dry contact is ON.
2	Bypass output	UPS is in the bypass output status, and this dry contact is ON.
3	Battery trip	Battery trips, and this dry contact is ON.
4	Bypass output	UPS is in the battery output status, and this dry contact is ON.
5	Battery under-voltage alarm	Battery discharges to the under-voltage alarm, and this dry contact is ON.
6	Battery under-voltage protection	Battery discharges to the under-voltage protection status, and this dry contact is ON.
7	Output overload	UPS is in the overload status, and this dry contact is ON.
8	UPS fault	Fault status, and this dry contact is ON.
9	Bypass abnormal	Bypass is abnormal or it's unable to track bypass, and this dry contact is ON.
10	Mains abnormal	Mains is abnormal, and this dry contact is ON.
	Start generator	11 When the generator starts, and this dry contact is

BATTERY COLD START BUTTON

When there isn't mains and bypass status, long press the battery cold start button for 2s and UPS will start in the battery status.

2.5 Optional Accessory

The IST6-120 UPS can select different accessories(as shown in Table 2-9) to meet different requirements.

TABLE 2-9 Optional accessory list

NO.	Name	NO.	Name
1	SNMP card and its software	5	Surge protection device
2	Expansion card	7	Top wiring accessory
3	Parallel/BSC accessory	8	Battery tripper control accessory
4	Battery temperature sampling accessory	/	/

2.5.1 SNMP Card and Its Software

SNMP card(as shown in Figure 2-15) is installed in the UPS to realize the UPS remote management.

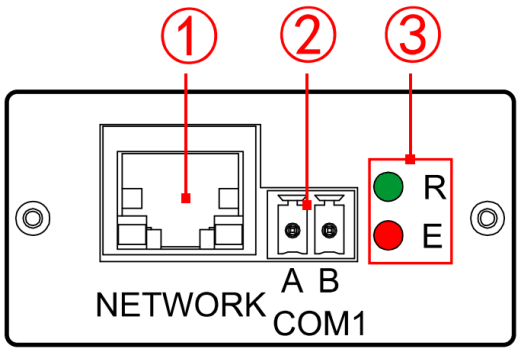

FIGURE 2-15 SNMP card

> **NOTE**
> When the SNMP card is selected, the SNMP card will be installed on the system control box of UPS before shipping.

TABLE 2-10 Illustration of the SNMP card

NO.	Name	Function description
	NETWORK port	Ethernet port.
	COM1 port	Connect with humiture module(RS485).
	Indicator	Show working status.

TABLE 2-11 Illustration of indicator of the SNMP card

Green indicator(R)	Red indicator(E)	Status description
ON	ON	Start
Flicker	*	Running
OFF/ON	*	Crash, keep final status.
*	OFF	No alarm.
*	Flicker	Alarm

> **NOTE**
> * = any indicator state.

NETWORK PORT

The NETWORK port adopts the RJ45 plug. The pin definition of the NETWORK port is shown in Figure 2-16.

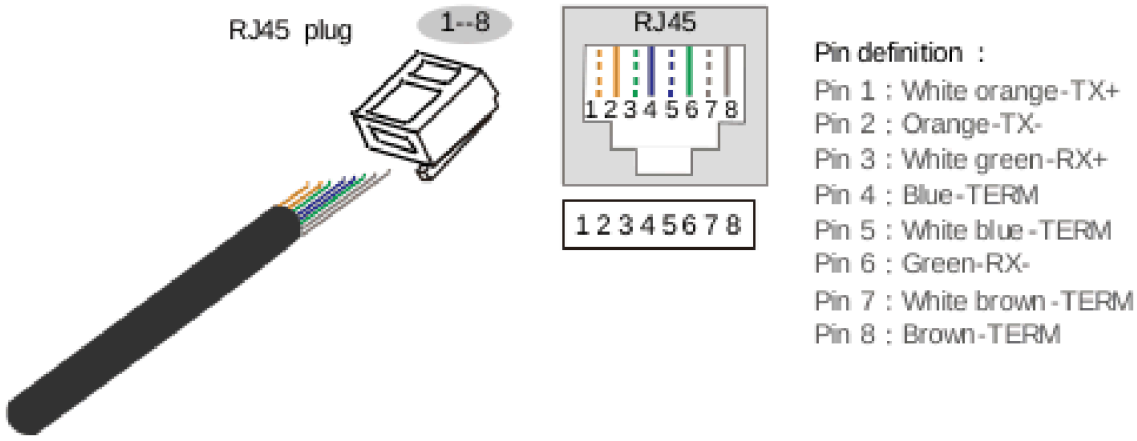

FIGURE 2-16 The pin definition of the NETWORK port

SNMP CARD SOFTWARE

> **NOTE**
> It is suitable but not only for the following browsers(the early operating system may not be good in compatibility): Chrome56+ browser, IE11+ browser. The login interface is different in different browser.

> **CAUTION**
> Please ensure that the setting IP address is in the same network segment with user's computer IP address.

After installing and wiring the SNMP card, configure the software as follows.

PROCEDURE

1. Open a browser and enter the IP address of the SNMP card (default IP: 192.168.0.100).

> **NOTE**
> If the IP address of the SNMP card has been changed, or if several SNMP cards are used, the IP addresses can be found with the network discovery tool supplied by AEC technical support.

2. Enter the user name and password in the login page and click **Login** to enter the monitoring page.

> **NOTE**
> Default user name is admin; the default password is given in the AEC SNMP card manual.

2.5.2 Expansion Card

DRY CONTACT EXPANSION CARD

The dry contact expansion card(as shown in Figure 2-17) is mainly used for the detection signal sampling. The dry contact expansion card includes three input dry contact communication signals and two output dry contact signals, the illustration is shown in Table 2-12.

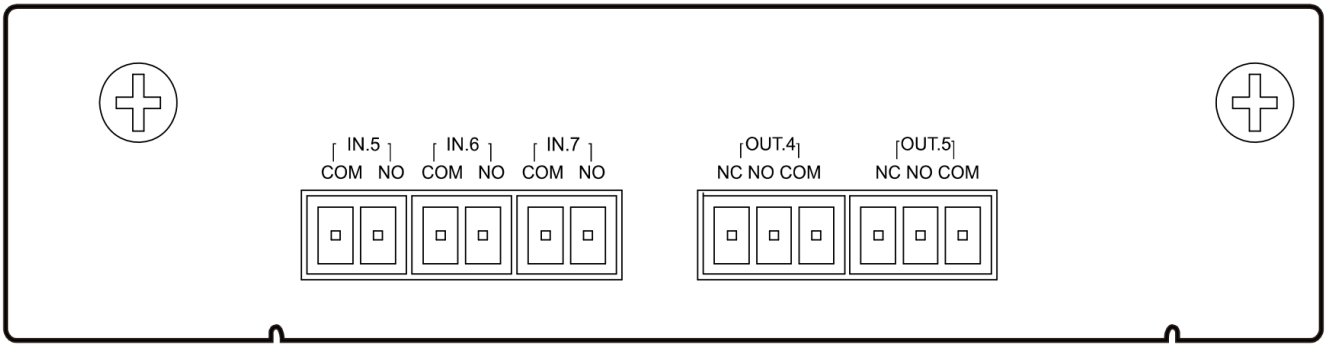

FIGURE 2-17 Dry contact expansion card

> **NOTE**
> When the dry contact expansion card is selected, the dry contact expansion card will installed on the system control box of UPS before shipping.

TABLE 2-12 Illustration of the dry contact

Port	Mark	Signal	Illustration
OUT.4	NC	OUT.4 normal close output port	When the signal is effective, COM and NO connect, and NC disconnects. This signal is settable.
	NO	OUT.4 normal open output port	
	COM	Common terminal (reinforced insulation from mains)	
OUT.5	NC	OUT.5 normal close output port	When the signal is effective, COM and NO connect, and NC disconnects. This signal is settable.
	NO	OUT.5 normal open output port	
	COM	Common terminal (reinforced insulation	
		from mains)	
IN.5	COM	Common terminal (reinforced insulation from mains)	When the NO and COM is short-circuit, the signal is effective. This signal is settable.
	NO	External switch normal open input port	
IN.6	COM	Common terminal (reinforced insulation from mains)	When the NO and COM is short-circuit, the signal is effective. This signal is settable.
	NO	External switch normal open input port	
IN.7	COM	Common terminal (reinforced insulation from mains)	When the NO and COM is short-circuit, the signal is effective. This signal is settable.
	NO	External switch normal open input port	

The pin definition of the input dry contact and output dry contact are as shown in Table 2-7 and Table 2-8.

BMS EXPANSION CARD

The BMS expansion card(as shown in Figure 2-18) is mainly used for the Li-battery communication. The BMS expansion card includes one BMS communication port, two input dry contacts and one output dry contact. The illustration is shown in Table 2-13.

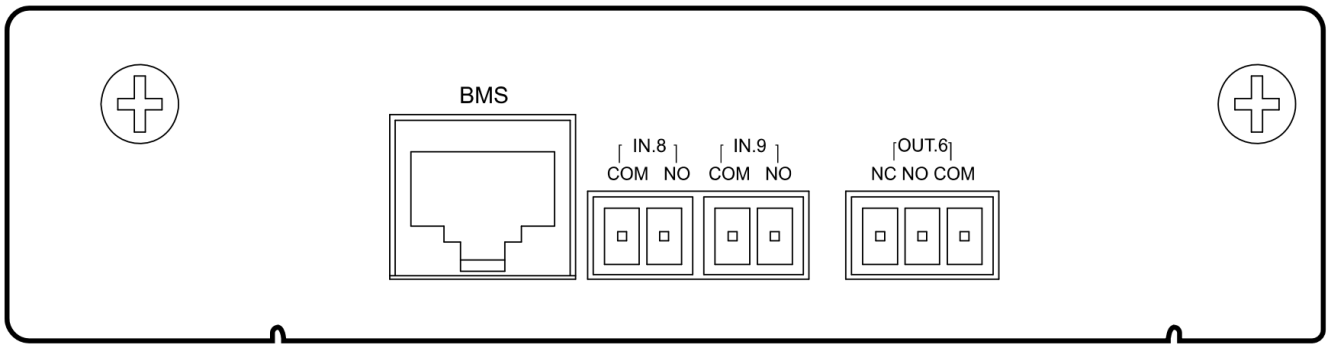

FIGURE 2-18 BMS expansion card

TABLE 2-13 Illustration of the BMS expansion card

Port	Mark	Signal	Illustration
BMS		BMS port	It is used to communicate with the Li-battery. The BMS port adopts the RJ45 plug. The pin definition of the BMS port is shown in Figure 2-19.
IN.8	COM	Common terminal (reinforced insulation from mains)	When the NO and COM is short-circuit, the signal is effective. This signal can be se to charge disabled.
	NO	External switch normal open input port	
IN.9	COM	Common terminal (reinforced insulation from mains)	When the NO and COM is short-circuit, the signal is effective. This signal can be se to discharge disabled.
	NO	External switch normal open input port	
OUT.6	NC	OUT.6 normal close output port	When the signal is effective, COM and NO connect, and NC disconnects. This port is reserved.
	NO	OUT.6 normal open output port	
	COM	Common terminal (reinforced insulation from mains)	

NOTE

For Li-battery reliability consideration, if Li-battery is used, it's recommended to install BMS expansion card and debug with the Li-battery before shipping.

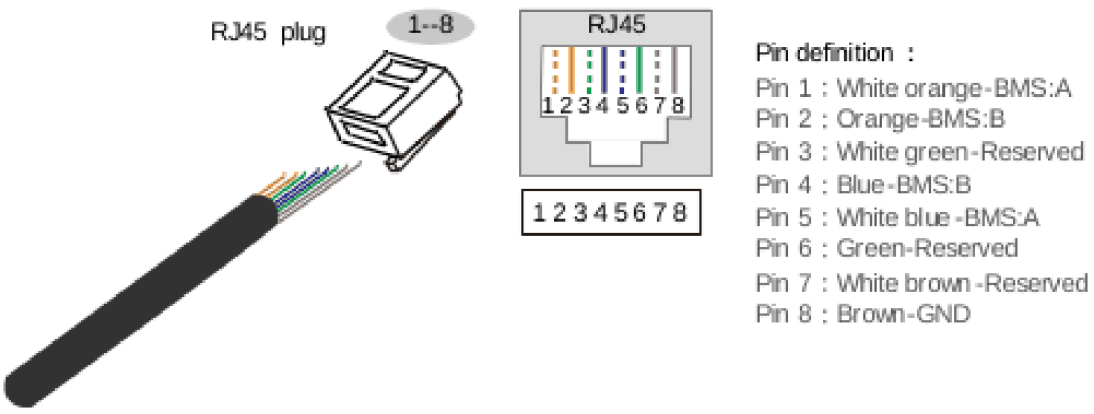

FIGURE 2-19 Pin definition of BMS port

2.5.3 Parallel/BSC Accessory

Parallel/BSC accessory are for parallel/BSC ports connection among UPSs.

When several UPSs are paralleled, connect the parallel ports of all UPSs with parallel cables. N UPSs require N parallel cables, so that each UPS has at least two parallel cables, which improves the reliability of the parallel system.

The synchronous BSC output dual bus control is used in a dual bus system to synchronize the output frequency and phase of each system in a dual bus system to ensure that the two buses can switch to each other.

> **NOTE**
> If parallel wires are selected, the parallel wires are configured with UPS before shipping.

PARALLEL PORT CONNECTION

- Parallel system connection(two UPSs)

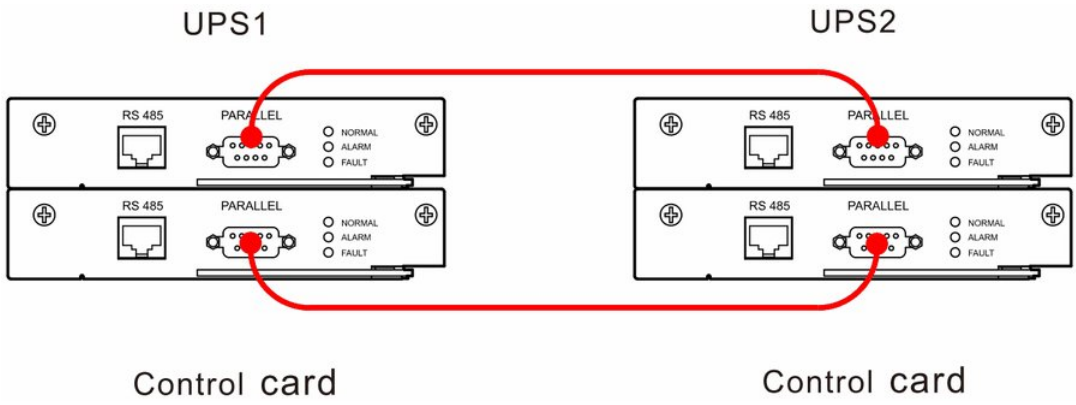

FIGURE 2-20 Parallel system connection(two UPSs)

- Parallel system connection(multiple UPSs)

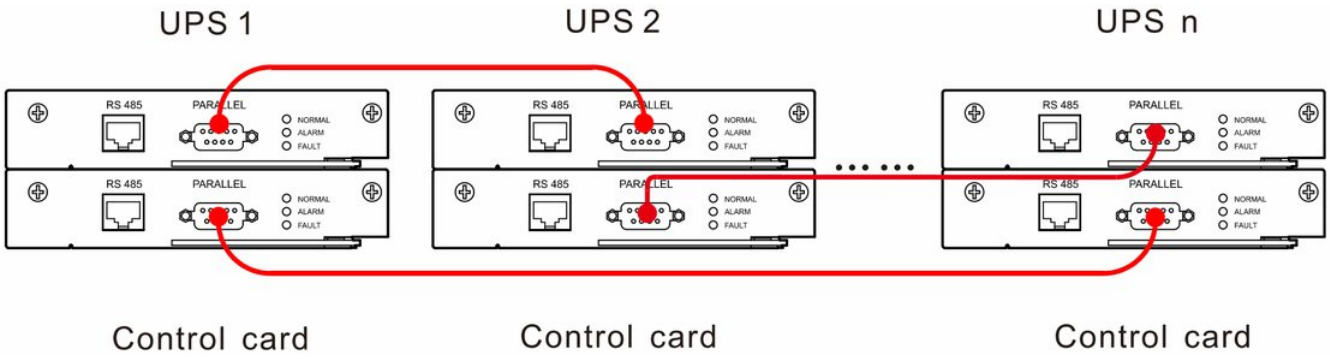

FIGURE 2-21 Parallel system connection(multiple UPSs)

2.5.4 Battery Temperature Sampling Accessory

The battery temperature sampling accessory is used to monitor the battery temperature to realize the battery charging and discharging temperature compensation. When the battery temperature compensation function is selected, it will be configured that one temperature control wire, one temperature control extension wire and one 2 pin green terminal.

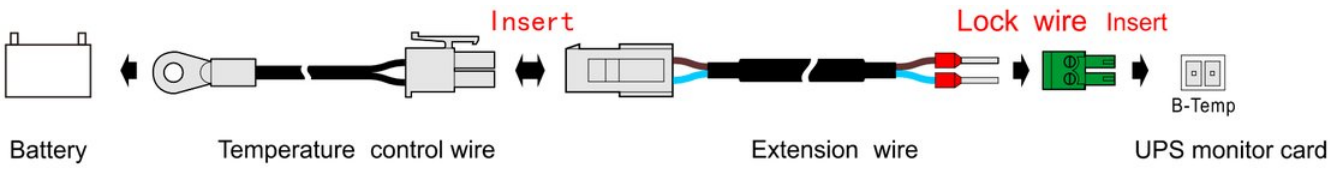

FIGURE 2-22 Battery temperature sampling accessory connection

> **NOTE**
> Fix the temperature sensor in the warmest area of the battery installation.

2.5.5 Surge Protection Device

In areas where lightning strikes are frequent, multistage surge protection system should be installed at the incoming wire of the mains to ensure the safe operation of the device. A class C SPD and protection switch can be selected for UPS.

> **NOTE**
> If the surge protection device is selected, it must power off UPS and then install the surge protection device when there has strong electricity. It's recommended to require installing the surge protection device before shipping.

2.5.6 Top Wiring Accessory

When the cross-sectional area of wire in the site is less than 120mm2 and the wiring method is top wiring, it can select the top wiring accessory to realize the top wiring, the wiring diagram is as shown in Figure 3-33.

2.5.7 Battery Tripper Control Accessroy

When the battery switch tripper is installed, it need to configure the battery tripper control accessory. The output power of the battery tripper control accessory is 24VDC, it can control the voltage turning through dry contact to meet the requirements of shunt tripper and under- voltage tripper.

> **NOTE**
> The output of the battery tripper control accessory is 24VDC, it only meets the requirements of the tripper with rated power 24VDC.

2.6 Alarm Function

Once the UPS is abnormal, it will send sound & light alarm. The alarm or protection function of the UPS is as shown in Table 2-14.

TABLE 2-14 Abnormal status and alarm protection function

Fault	Information	Protect requirement	Alarm requirement
Mains fault	Mains fault	Mains power supply is not allowed. Mains red.	Buzzer slowly beeps, the AC/DC indicator turns red, and the mains icon on the touch screen turns
	Mains over-voltage		
	Mains under-voltage		
	Mains unbalance		
	Mains over-frequency		
	Mains under-frequency		
	Mains failure		
	Mains phase loss		
	phase sequence abnormal		
	Large mains harmonic component		
	Mains drop		
	Mains PFC overload protection		
	Mains neutral wire loss		
	Large mains DC component		
Battery fault	Battery fault	Battery power supply is not allowed.	Buzzer fast beeps, the BATT. LOW indicator turns red, and the battery icon on the touch screen turns red.
	Battery reversed		
	Battery over-voltage		
	Charger over-current		
	Battery circuit abnormal		
	Bypass under-voltage protection		
	Bypass overload		
Bypass	Bypass fault	Bypass power supply	Buzzer slowly beeps, the

TABLE 2-14 Abnormal status and alarm protection function *(continued)*

Fault	Information	Protect requirement	Alarm requirement
fault	Bypass over-voltage	is not allowed.	BYP. indicator turns red, and the bypass icon on the touch screen turns red.
	Bypass under-voltage		
	Bypass unbalance		
	Bypass over-frequency		
	Bypass under-frequency		
	Bypass failure		
	Bypass phase loss		
	Bypass phase sequence abnormal		
	Large bypass harmonic component		
	ECO power down detection	ECO output is not allowed.	Buzzer slowly beeps.
	ECO over-voltage		
	ECO under-voltage		
	ECO over-frequency		
	ECO under-frequency		
Output fault	Inverter output fault	Inverter output is not allowed.	Buzzer long beeps, the DC/AC indicator turns red, and the output icon on the touch screen turns red.
	Output short circuit		
	Inverter over-voltage		
	Inverter under-voltage		
	Output circuit abnormal	None	Buzzer slowly beeps, the DC/AC indicator turns red, and the output icon on the touch screen turns red.
	Low output PF	Inverter output is not allowed.	Buzzer long beeps, DC/AC indicator turns red on the
	Large output current DC		
	component		touch screen, and the output

TABLE 2-14 Abnormal status and alarm protection function *(continued)*

Fault	Information	Protect requirement	Alarm requirement
System fault	System fault	None	Buzzer long beeps.
	System EPO on	Bypass output and inverter output are not allowed.	
	System bypass fault	None	
	System inverter fault	None	
	EPO on	Bypass output and inverter output are not allowed.	
	Bypass overload protection	Bypass output and inverter output are not allowed.	Buzzer long beeps, the OVERLOAD indicator turns red, and the output icon on the touch screen turns red.
	Bypass SCR abnormal	Bypass output is not allowed	Buzzer long beeps, the BYP. indicator turns red, and the bypass icon on the touch screen turns red.
	Parallel wire abnormal	Inverter output is not allowed	Buzzer long beeps.
	Sovereignty of parallel system fault	None	Buzzer long beeps.
	Inverter overload protection	Inverter output is not allowed	Buzzer long beeps, the OVERLOAD indicator turns red, and the output icon on the touch screen turns red.
	Maintenance bypass on	Inverter output is not allowed	Buzzer long beeps
	Battery charge disabled on	None	Buzzer fast beeps, the BATT.
			LOW indicator turns red, and the battery icon on the touch screen turns red.
	Battery discharge disabled on	None	
Cabinet fault	Cabinet fault	None	Buzzer long beeps.
	Bypass over-temperature	Bypass output depends on the "bypass over-temperature enable" setting.	Buzzer long beeps, the BYP. indicator turns red, and the bypass icon on the touch screen turns red.
	Inverter output over-current	None	Buzzer long beeps.
	Rectifier fault self-locking	None	
	Inverter fault self-locking	None	
	Battery overload protection	None	
	Battery discharge protection	None	
	UPS fault	None	

TABLE 2-14 Abnormal status and alarm protection function *(continued)*

Fault	Information	Protect requirement	Alarm requirement
Cabinet pre-alarm	Cabinet pre-alarm	None	Buzzer fast beeps.
	Cabinet over-temperature alarm	None	
	High battery temperature alarm	None	
	Low battery temperature alarm	None	
	Battery under-voltage alarm	None	
	Backup time insufficient	None	
	Output overload alarm	None	Buzzer fast beeps. the OVERLOAD indicator turns red, and the output icon on the touch screen turns red.
	Output frequency out of scope	None	Buzzer fast beeps.
	Bypass auxiliary power abnormal	None	
	Bypass over-temperature alarm	None	
	Some power module PFC abnormal	None	
	Battery auto-start once power recover disable	None	
Cabinet alarm	Cabinet fault	None	Buzzer slowly beeps.
	Battery disconnected alarm	None	
	Auxiliary power abnormal	None	
	Bypass module is not installed.	Bypass output is not allowed	Buzzer slowly beeps, the BYP. indicator turns red, and the bypass icon on the touch screen turns red.
	Setting parameters mismatch	None	Buzzer slowly beeps.
	Battery parameters mismatch	None	
	Module number mismatch	None	
	Cabinet number mismatch	None	
	System card n _ it is not installed.	None	
	System card n _ flash abnormal.	None	
	System card n _ card slot address repeat.	None	
	System card n _ ON/OFF status and the primary card out of sync.	None	
	Bypass output now.	None	
	System card n _ parameter of primary card and secondary card out of sync.	None	
	System card n _ output status out of sync	None	
	Fan dedusting	None	

TABLE 2-14 Abnormal status and alarm protection function *(continued)*

Fault	Information	Protect requirement	Alarm requirement
Startup fault alarm	Startup fault alarm	Static startup is not allowed to work.	Buzzer slowly beeps.
	Inverter output not possible: load too heavy		
	Waiting common inverter for unknown load		
	PFC software version inconformity		
	Inverter software version inconformity		
	CCM software version inconformity		
	Module hardware version inconformity		
	Key parameters mismatch		
	Parallel address conflict		
	Module serial version inconformity		
Component failure alarm	Component failure	None	Buzzer slowly beeps.
	Bypass 1 NTC failure		
	Bypass 2 NTC failure		
	Cabinet NTC failure		
	System card NTC failure		
	Bypass fan abnormal		
	Cabinet fan abnormal		
	Parallel wire 1 alarm		
	Parallel wire 2 alarm		
	Bypass 1 is not installed.		
	Bypass 2 is not installed.		
	Monitor card is not installed.		
	Bypass module offline	Bypass output is not allowed.	Buzzer slowly beeps, the BYP. indicator turns red, and the bypass icon on the touch screen turns red.
	Expansion card offline	None	Buzzer slowly beeps.
	Bypass NTC failure		

TABLE 2-14 Abnormal status and alarm protection function *(continued)*

Fault	Information	Protect requirement	Alarm requirement
Comm. abnormal alarm	Communication abnormal	None	Buzzer fast beeps.
	Sync CAN inside cabinet abnormal		
	Equalized-current CAN inside cabinet abnormal		
	BMS communication fault		
	Display CAN inside cabinet abnormal		
	Sync CAN among cabinets abnormal		
	Equalized-current CAN among cabinets abnormal		
	Inner SCI communication abnormal		
Smart mode alarm	Smart mode alarm	None	Buzzer slowly beeps.
	Generator mode on		
	Generator charge disabled		
	Only a BSC system detected now		
	The load exceeds the set safety load.		
	Power module with no redundancy		
	Power module redundancy insufficient		
	Cabinet with no redundancy		
	Cabinet redundancy insufficient		
	System card with no redundancy		
	Self-load switch abnormal		
	Self-load time-out alarm		
	Inverter bypass out of sync		
Input dry contact status	Input dry contact alarm	None	Buzzer slowly beeps.
	Battery abnormal		Buzzer fast beeps, the BATT. LOW indicator turns red, and the battery icon on the touch screen turns red.
	Battery grounding fault		
	Battery switch off		
	Bypass switch off		Buzzer slowly beeps, the BYP. indicator turns red, and the bypass icon on the touch screen turns red.
	Output switch off		Buzzer slowly beeps.
	Battery discharge disabled on		Buzzer fast beeps, the BATT. LOW indicator turns red, and the battery icon on the touch

TABLE 2-14 Abnormal status and alarm protection function *(continued)*

Fault	Information	Protect requirement	Alarm requirement
			screen turns red.
	Battery charge disabled on		Buzzer fast beeps, the BATT. LOW indicator turns red, and the battery icon on the touch screen turns red.
	Mains abnormal		Buzzer slowly beeps.
	Input SPD abnormal		Buzzer slowly beeps.
Offline alarm status	Power module 1 offline	None	Buzzer slowly beeps.
	Power module 2 offline		
	Power module 3 offline		
	Power module 4 offline		
	Power module 5 offline		
	System card 1 offline		
	System card 2 offline		

⚠ CAUTION

After a battery under-voltage shutdown, the UPS restarts and recharges the battery as soon as the mains is normal.

03

CHAPTER 3

Installation

This chapter mainly introduces the installation of the UPS, including installation process, installation preparation, transporting, unpacking and checking, mechanical installation, electrical connection, parallel wiring and system checking and test, etc.

IN THIS CHAPTER

3.1 Installation Process
3.2 Installation Preparation
3.3 Transporting, Unpacking and Checking
3.4 Mechanical Installation
3.5 Electrical Connection
3.6 Parallel System Connection
3.7 System Check and Test

ROADMAP **From delivery to operation**

1. **Read the safety instructions** Section 1.1
2. **Unpack and check the delivery** Section 3.3
3. **Choose the place and prepare the cables and breakers** Section 3.2
4. **Install and connect** Section 2.5.6
5. **Start** Section 5.3.2
6. **Check the display and the settings** Section 4.3
7. **Look after** Section 5.3.5

CAUTION

Only trained professionals who are with high voltage and AC qualification can install UPS.

The UPS is just suitable to install on the flat ground that is concrete or non-flammable.

3.1 Installation Process

The installation process of the IST6-120 is as shown in Figure 3-1.

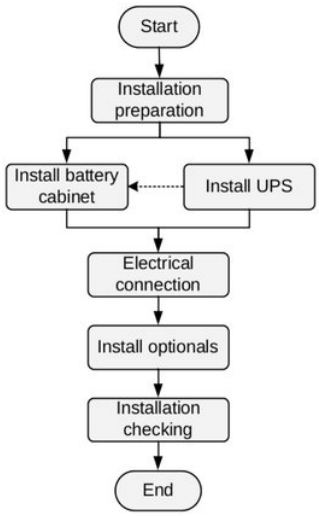

FIGURE 3-1 Installation process

3.2 Installation Preparation

3.2.1 Installation Tools

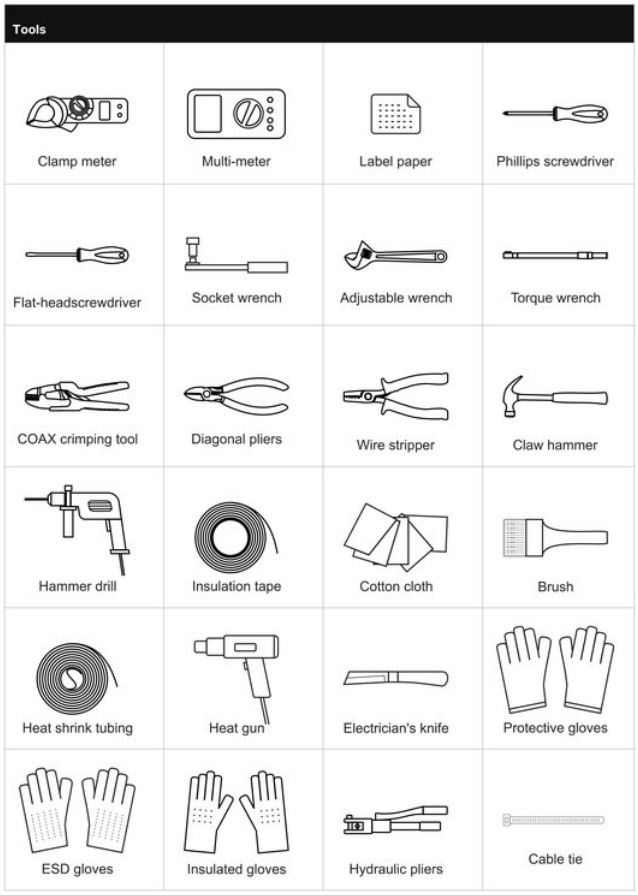

CAUTION

The installation tools must be insulated to avoid electric shock.

3.2.2 Installation Environment

- Install the UPS in the place where the temperature and humidity are within the range of - 5°C~40°C and 0%–95% respectively.
- Don't install the UPS in the environment where has metal conductive dust.
- Don't install the UPS in the open air. The installation environment should meet the specification of the UPS.
- Basic requirements for power supply.
  - Earthing: make sure that the earthing terminal is in order and that the voltage between neutral and earth does not exceed 5 V.
  - Before installation, please ensure that the AC input voltage and mains input wire capacity meet the UPS requirements, and considering if there has current-carrying capacity descending caused by wire aging.
  - The mains input voltage range of the UPS is 80~280VAC. The mains capacity should be greater than the max. input power of the UPS.
  - Do not use an upstream breaker with residual-current (RCD) protection.
- Install the UPS in the environment where with good ventilation and free of dust, volatile gas, salt, and corrosive materials. Keep the UPS far away from water, heat source, flammable and explosive substances. Avoid direct sunlight.

CAUTION

The optimal operating temperature for battery is 20°C–30°C. Operating at temperatures higher than 30°C will shorten the battery lifespan., and operating at temperatures lower than 20°C will shorten the battery backup time.

For safety consideration, please ensure the external DC distribution circuit is with three polar switch.

3.2.3 Installation Clearance

- Keep at least 800mm from the front panel and the rear panel of the UPS to the wall or adjacent device, keep at least 500mm from the top of the UPS to the ceiling for heat dissipation and maintenance, as shown in Figure 3-2.

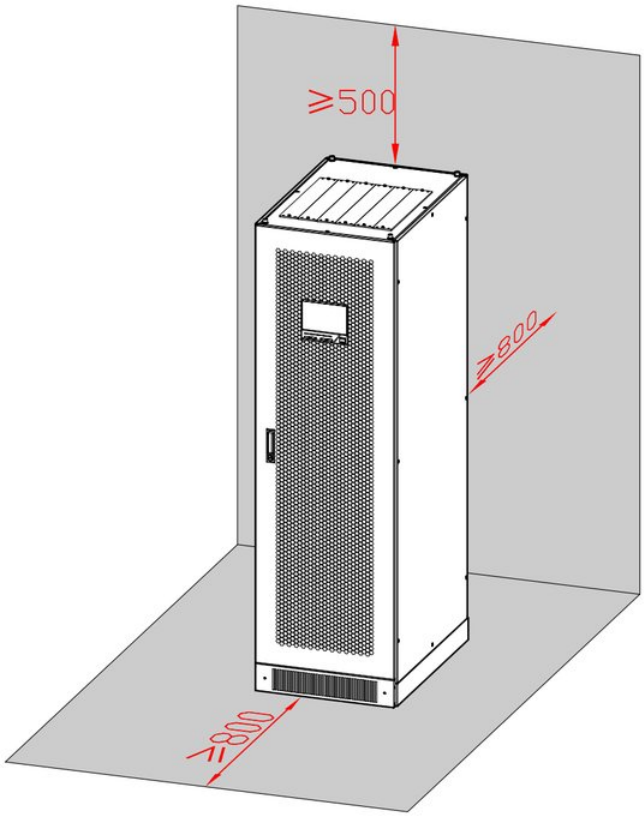

FIGURE 3-2 Installation clearance(unit: mm)

- Keep the ventilation holes on the front panel and rear panel unblocked to facilitate ventilation and heat dissipation, or, it may rise the inner temperature, even influence the UPS service time.

3.2.4 Input and Output Wire Selection

For the cross-sectional area of input wires and output wires of the UPS, please refer to the recommended values in Table 3-1.

TABLE 3-1 Wire and terminal requirements

Item ⌄	Model ›	IST6-120
Main	Mains input current(A)	213

Item ⌄			Model › IST6-120
s input	Cross-sectional area of wire(mm2)	U/V/W/N	1×(4×120)
	Terminal model		DT120
Bypass input	Bypass input current(A)		182
	Cross-sectional area of wire(mm2)	U/V/W/N	1×(4×95)
	Terminal model		DT95
Output	Output current(A)		182
	Cross-sectional area of wire(mm2)	U/V/W/N(Select larger cross- sectional area of neutral wire for non- linear load.)	1×(4×95)
	Terminal model		DT95
Battery input	±16 pieces of 12V storage batteries	Nominal discharge current of storage battery(The current at 384V)(A)	330
		Max. discharge current of storage battery(The ending discharge current value <the voltage of each battery is 10.5V>)(A)	377
		Cross-sectional area of wire(mm2) +/N/-	1×(3×95)
		Terminal model	DT95
	±14 pieces of 12V storage batteries	Nominal discharge current of storage battery(The current at 336V)(A) (Note: when it's 14 pieces batteries, decrease rated power of battery)	302

Item ⌄			Model › IST6-120
		Max. discharge current of storage battery(The ending discharge current value <the voltage of each battery is 10.5V>(A) (Note: when it's 14 pieces batteries, decrease rated power of battery)	345
		Cross-sectional area of wire(mm2) +/N/-	1×(3×95)
		Terminal model	DT95
Grounding	Cross-sectional area of wire(mm2)	PE	95
	Terminal model		DT95

NOTE

The wires supplied with the UPS are UL-certified. The cross-sections above are recommended for cables up to 5 m long; longer cables need larger cross-sections.

3.3 Transporting, Unpacking and Checking

3.3.1 Transportation

⚠ CAUTION

The UPS must be transported by trained professionals.

When transporting, please move carefully and avoid impacting or dropping.

If the UPS needs to be stored for a long time after unpacking, it is suggested to pack the UPS by original plastic bag.

The UPS can be transported by motor-driven forklift (as shown in Figure 3-3) or manual forklift (as shown in Figure 3-4). While lifting, please keep the UPS center of gravity at that of the forklift and move slowly and stably.



FIGURE 3-3 Motor forklift

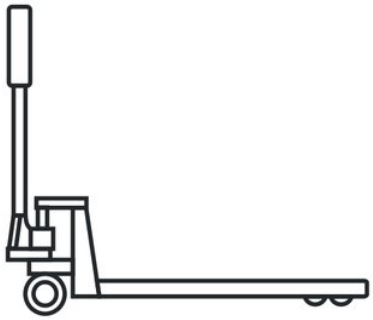

FIGURE 3-4 Manual forklift

⚠ CAUTION

While lifting the UPS, please keep stable and balanced.

During transporting, keep the UPS vertical. Avoid put down or put up the UPS suddenly.

3.3.2 Unpacking and Checking

PROCEDURE

1. Inspect the package's appearance for shipping damage, if any shipping damage is found, report it to the carrier immediately.
2. Move the UPS to the designated site.

⚠ CAUTION

To avoid tipping, use forks longer than the pallet.

3. Unpack the external package. Remove the foam pad and plastic bag, take out the accessories and documents.
4. Check the UPS.
   - Inspect the UPS's appearance for shipping damage, if any shipping damage is found, report it to the carrier immediately.
   - Check that all accessories are present and correct. If there is any discrepancy, note it and contact AEC immediately.
5. Unscrew the bolts that connected UPS with wooden bracket by socket wrench, the bolt position is as shown in Figure 3-5.

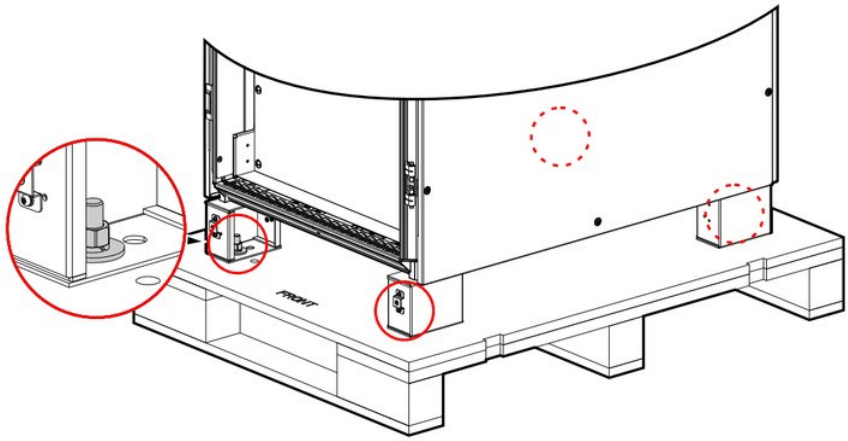

FIGURE 3-5 Bolt position

3.4 Mechanical Installation

3.4.1 UPS Installation

> **NOTE**
> Floor installation is shown as the example. For other installation methods, adapt the procedure to the site.

> **CAUTION**
> For the bottom wiring, dig the wiring groove for wiring in advance, as shown in Figure 3-6.

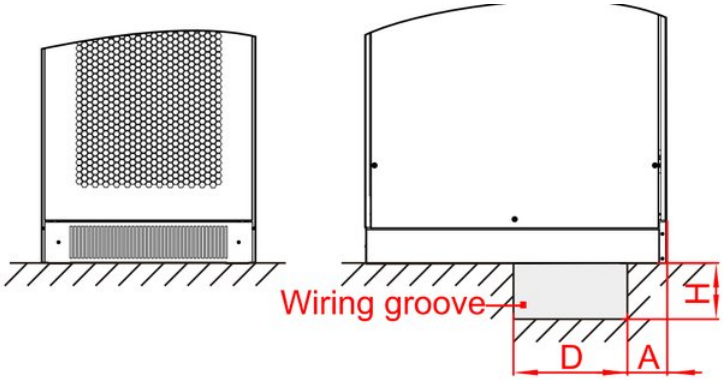

FIGURE 3-6 Wiring groove diagram(Unit: mm)

> **NOTE**
> The recommended cable trench size is: A×D×H: 200×400×300 (mm).

PROCEDURE

1. Determine and plan the installation position according to the UPS size (as shown in Figure 3-7) and installation clearance requirement (see 3.2.3 Installation Clearance).

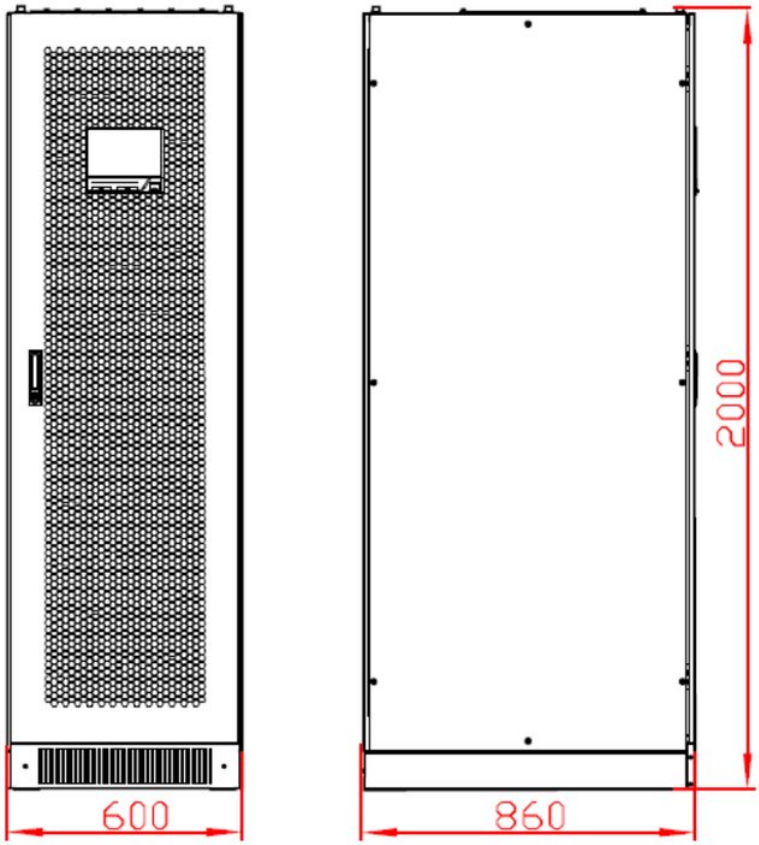

FIGURE 3-7 UPS size(unit: mm)

2 Drill four φ14mm holes on the ground by impact drill according to the installation hole size of pedestal (as shown in Figure 3-8).

NOTE

If the UPS is installed on U-steel, drill four holes(hole diameter isφ14mm) on the U-steel directly(as shown in Figure 3-9), and then perform Step 4 to install UPS directly.

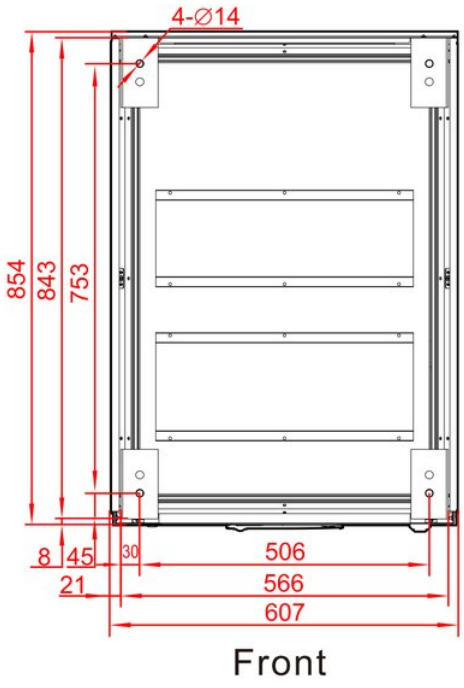

FIGURE 3-8 The installation hole size of pedestal(unit: mm)

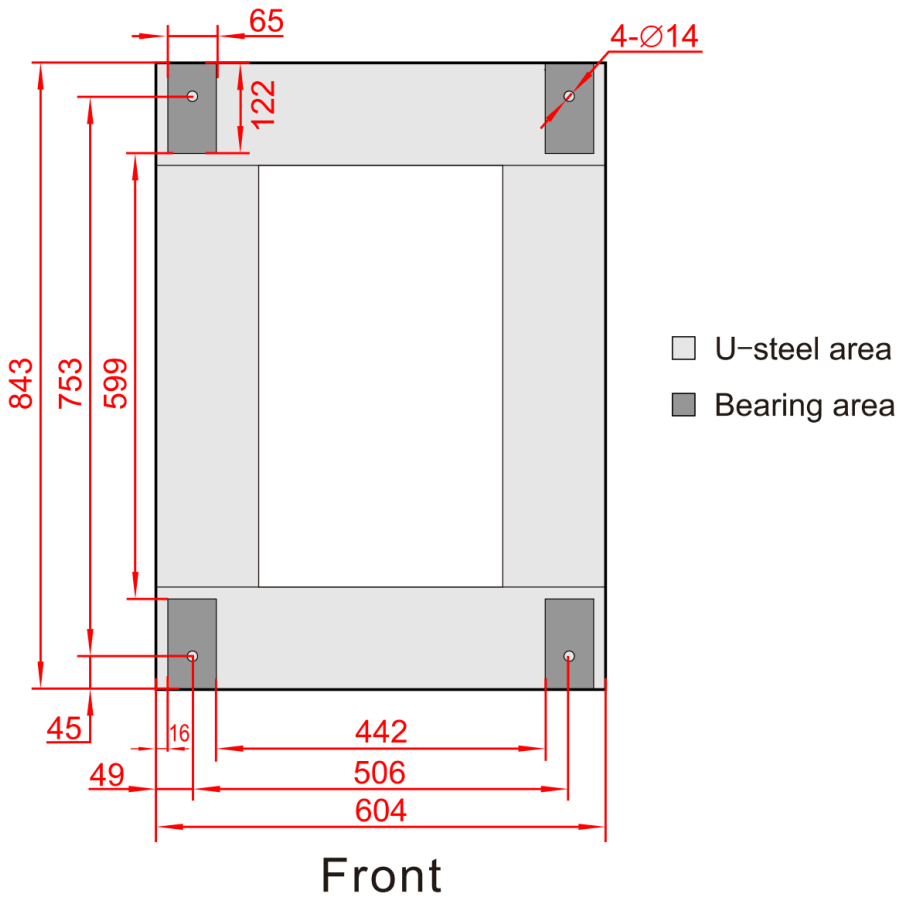

FIGURE 3-9 Recommended U-steel size

3 Install the expansion bolts. The structure and installation of the expansion bolt is as shown in Figure 3-10.

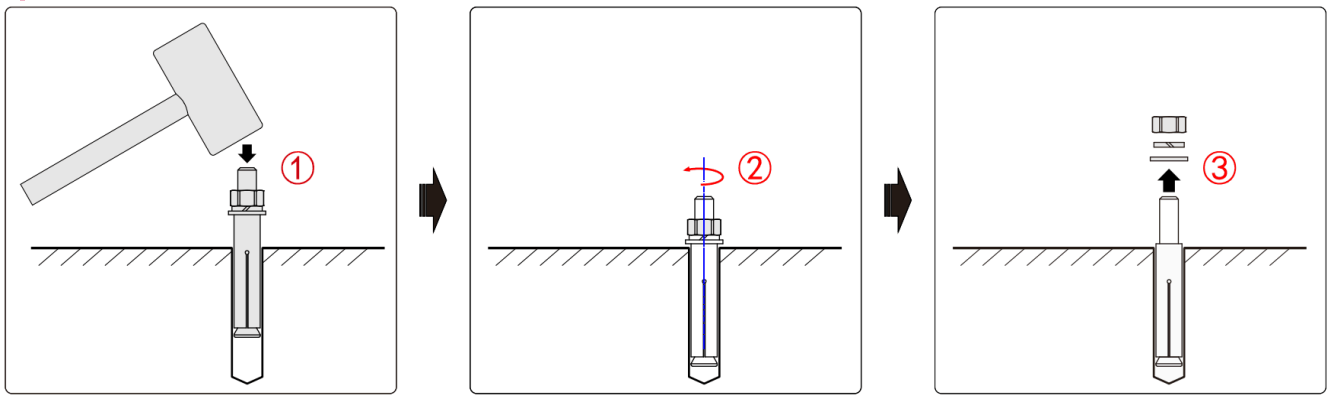

FIGURE 3-10 Structure and installation of expansion bolt

⚠ CAUTION

For installation consideration, the expansion tube should be into the installation hole, that is it should be not higher than ground.

NOTE

The outer height of expansion bolts should be within 30-50mm.

4 Move the UPS from wooden bracket to the ground, align the bottom installation hole with the expansion bolt, and lock the bolts.

CAUTION

When moving UPS by forklift, the forklift arm must be inserted from the side of UPS.

While lifting, please keep the UPS center of gravity at that of the forklift to avoid tilting.

NOTE

If adopting the bottom wiring, please ensure that the installation position is right above the wiring groove.

5 Install the bottom plates, as shown in Figure 3-11.

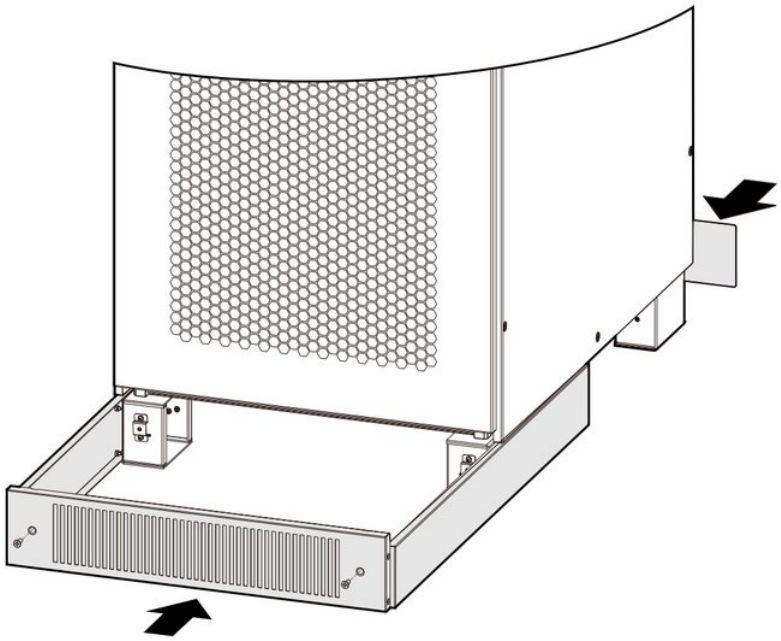

FIGURE 3-11 Install the bottom plates

3.4.2 Optional Accessory Installation

TOP WIRING ACCESSORY

NOTE

When the wiring method is top wiring, it should select the top wring accessory for wiring. The installation procedures are as follow.

CAUTION

The top wiring accessories are installed in the two sides of UPS. It requires enough space in the two sides of UPS for top wiring installation.

PROCEDURE

1 Dismantle the side plates, as shown in Figure 3-12.

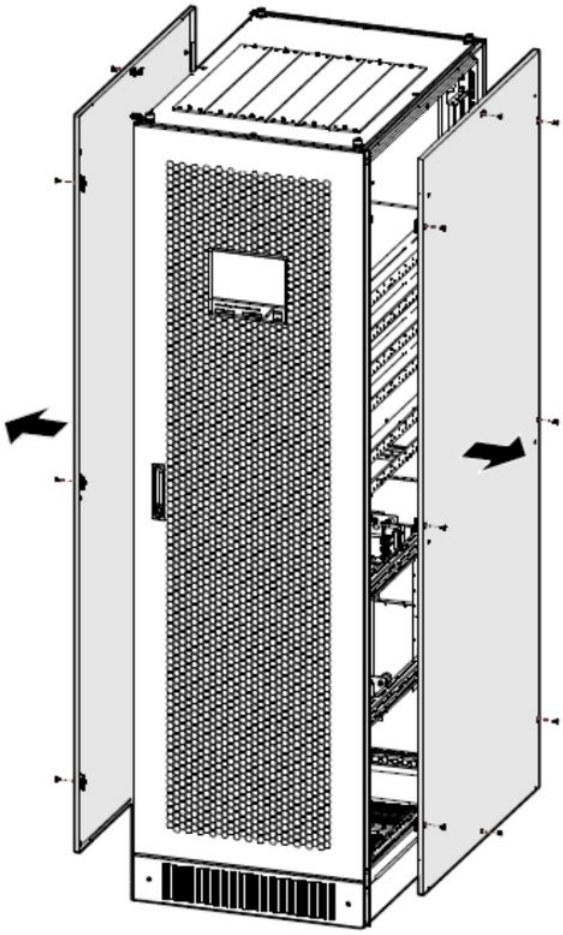

FIGURE 3-12 Dismantle the side plates

2 Install the top wiring accessories, as shown in Figure 3-13.

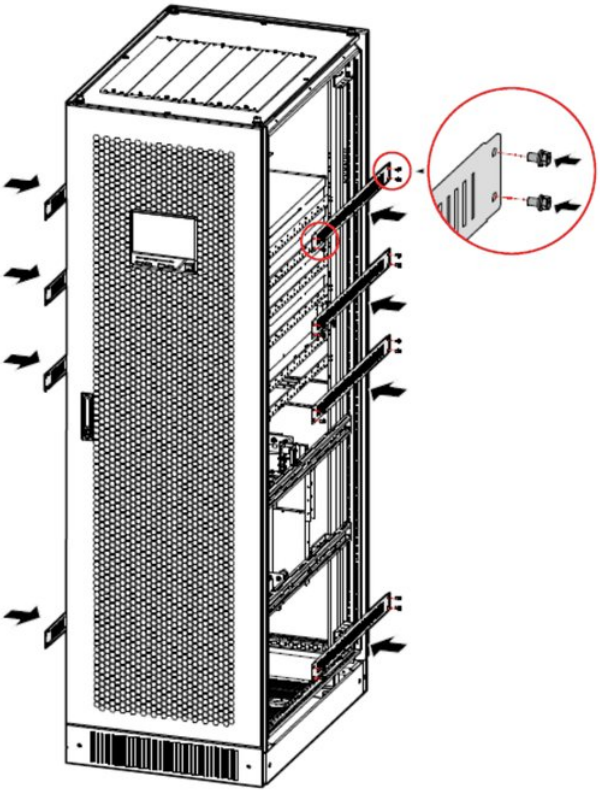

FIGURE 3-13 Install the top wiring accessories

SNMP CARD

PROCEDURE

1. Dismantle the SNMP card plate on the system control box, as shown in Figure 3-14.

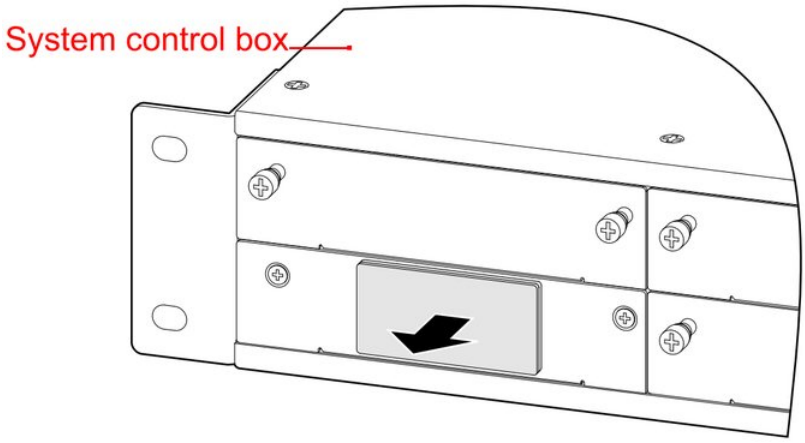

FIGURE 3-14 Dismantle the SNMP card plate

2. Install SNMP card on the system monitor box, as shown in Figure 3-15.

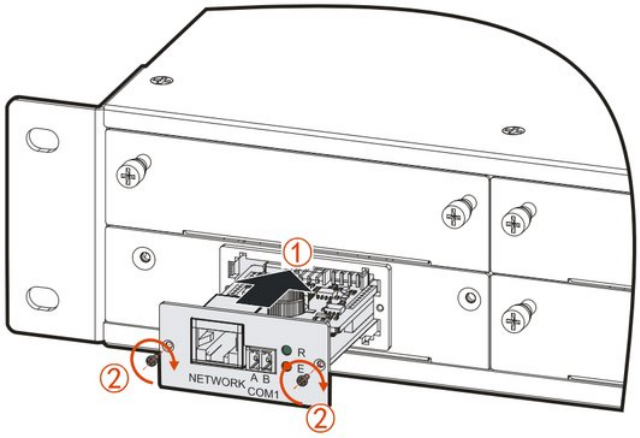

FIGURE 3-15 Install SNMP card

DRY CONTACT EXPANSION CARD/BMS EXPANSION CARD

> **NOTE**
> The installation way for the dry contact expansion card and the BMS expansion card is the same. The dry contact expansion card is shown as the example.

PROCEDURE

1. Unscrew the screws on the dry contact expansion card and dismantle the dry contact expansion card plate on the system control box, as shown in Figure 3-16.

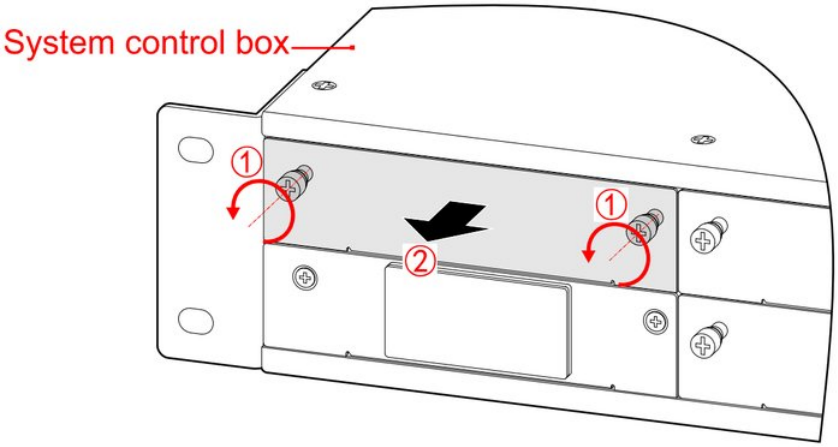

FIGURE 3-16 Dismantle the dry contact card plate

2 Install the dry contact expansion card on the system monitor box, as shown in Figure 3-17.

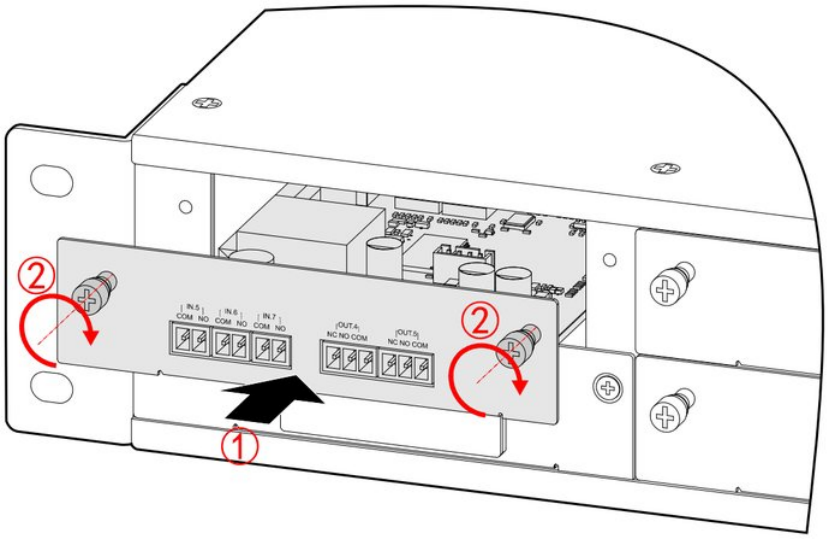

FIGURE 3-17 Install the dry contact expansion card

SURGE PROTECTION DEVICE

DANGER

Before installing the surge protection device, it must power off UPS completely.

It's recommended to require installing the surge protection device before shipping. If the surge protection device is selected after shipping, the surge protection device installation is as follows.

PROCEDURE

1 Dismantle the surge protection device plate, as shown in Figure 3-18.

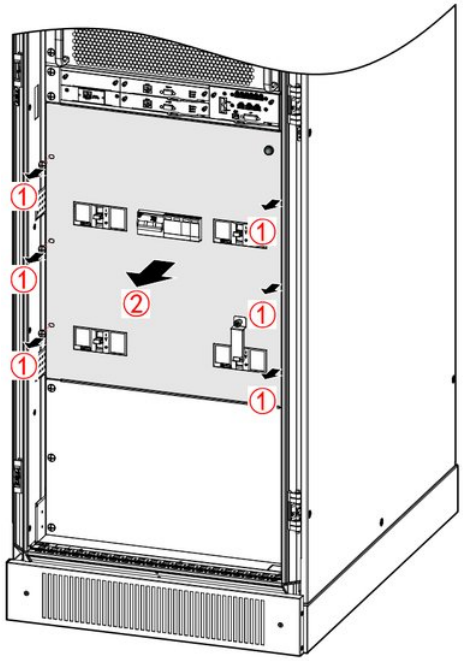

FIGURE 3-18 Dismantle the surge protection device plate

2. Remove the wire for the battery cold start button. The position of the battery cold start button is as shown in Figure 2-4.
3. Install the fixed plate for the surge protection device, as shown in Figure 3-19.

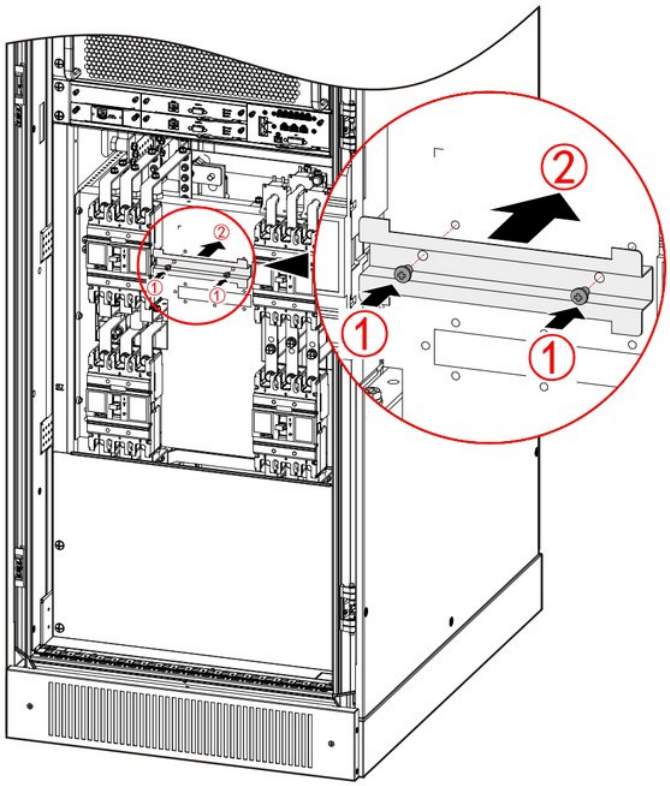

FIGURE 3-19 Install the fixed plate for the surge protection device

4. Install the SPD and surge protection switch in the fixed plate, as shown in Figure 3-20.

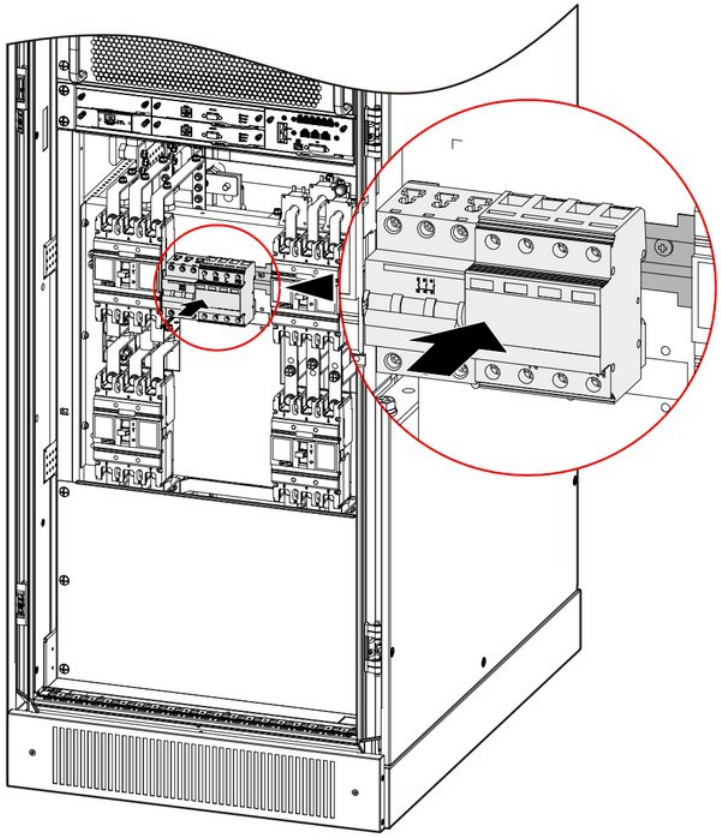

FIGURE 3-20 Install the SPD and surge protection switch

5 Connect the wires of the SPD and surge protection switch to the corresponding copper bars and plates respectively, as shown in Figure 3-21.

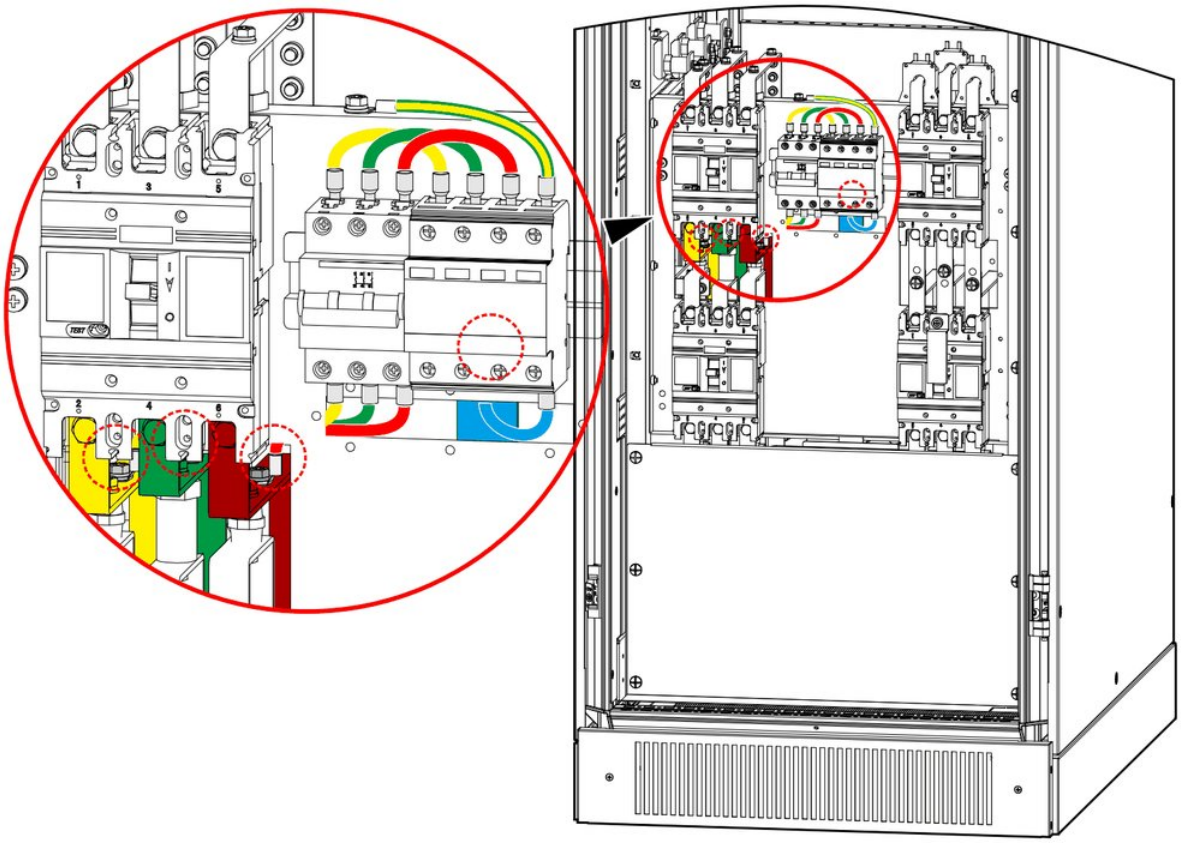

FIGURE 3-21 The wiring for the surge protection device

6 Knock off the knock-off hole of the surge protection device plate and file the disconnected position through file. The position of the knock-off hole is as shown in Figure 3-22.

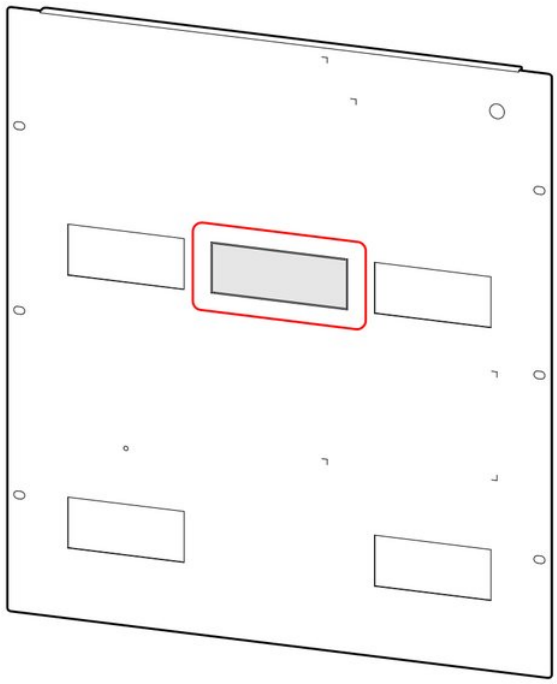

FIGURE 3-22 The position of the knock-off hole

7 Install the surge protection device plate, as shown in Figure 3-23.

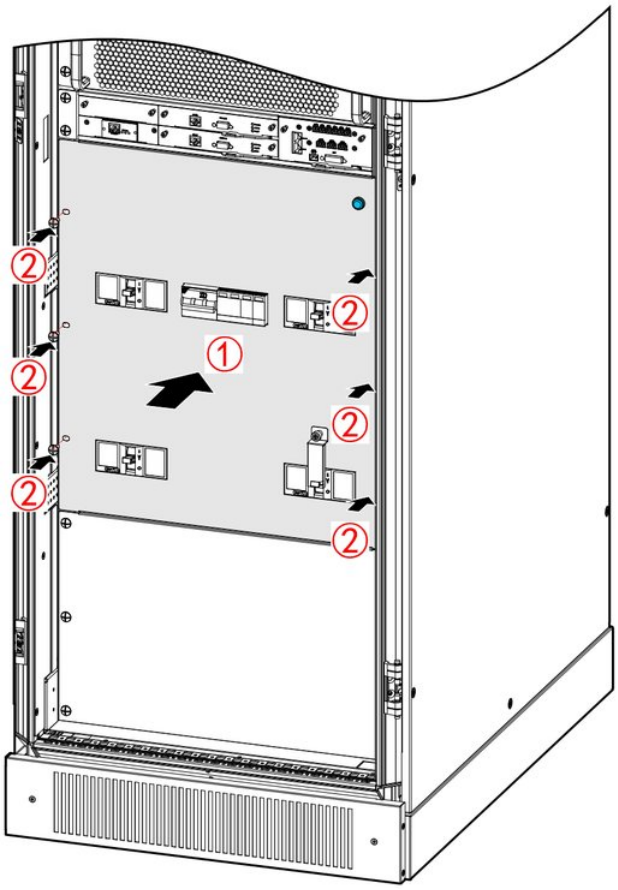

FIGURE 3-23 Install the surge protection device plate

BATTERY TRIPPER CONTROL ACCESSORY

DANGER

Before installing the battery tripper control accessory, it must power off UPS completely.

It's recommended to require installing the battery tripper control accessory before shipping. If the battery tripper control accessory is selected after shipping, the battery tripper control accessory installation is as follows.

PROCEDURE

1. Take the battery tripper PCB board out and install it in the rear of UPS through five M4 screws, as shown in Figure 3-24.

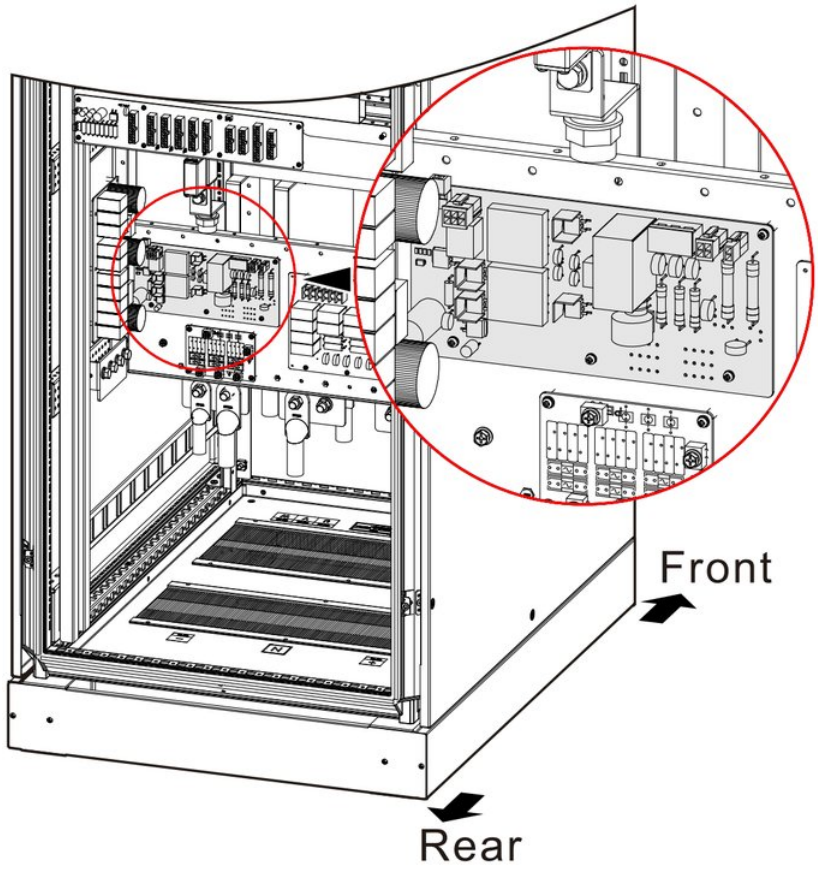

FIGURE 3-24 The position of battery tripper PCB board

2. Connect the CN1~CN5 of PCB board to the copper bars of UPS and user, the wiring is as shown in Figure 3-25, Figure 3-26, Figure 3-27.

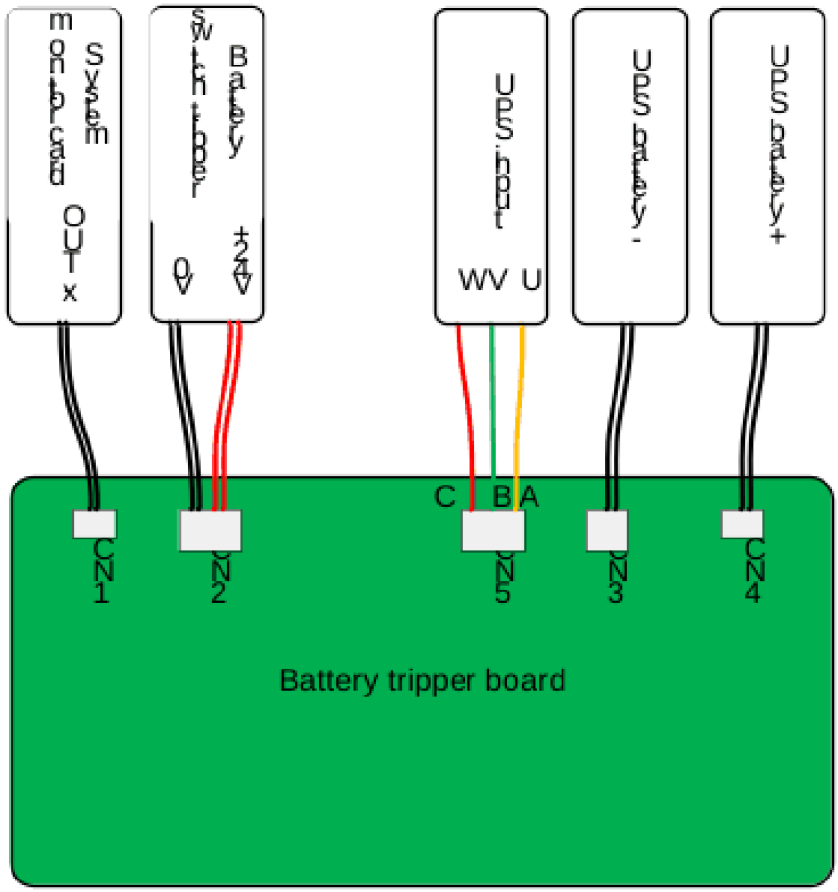

FIGURE 3-25 Battery tripper board connection

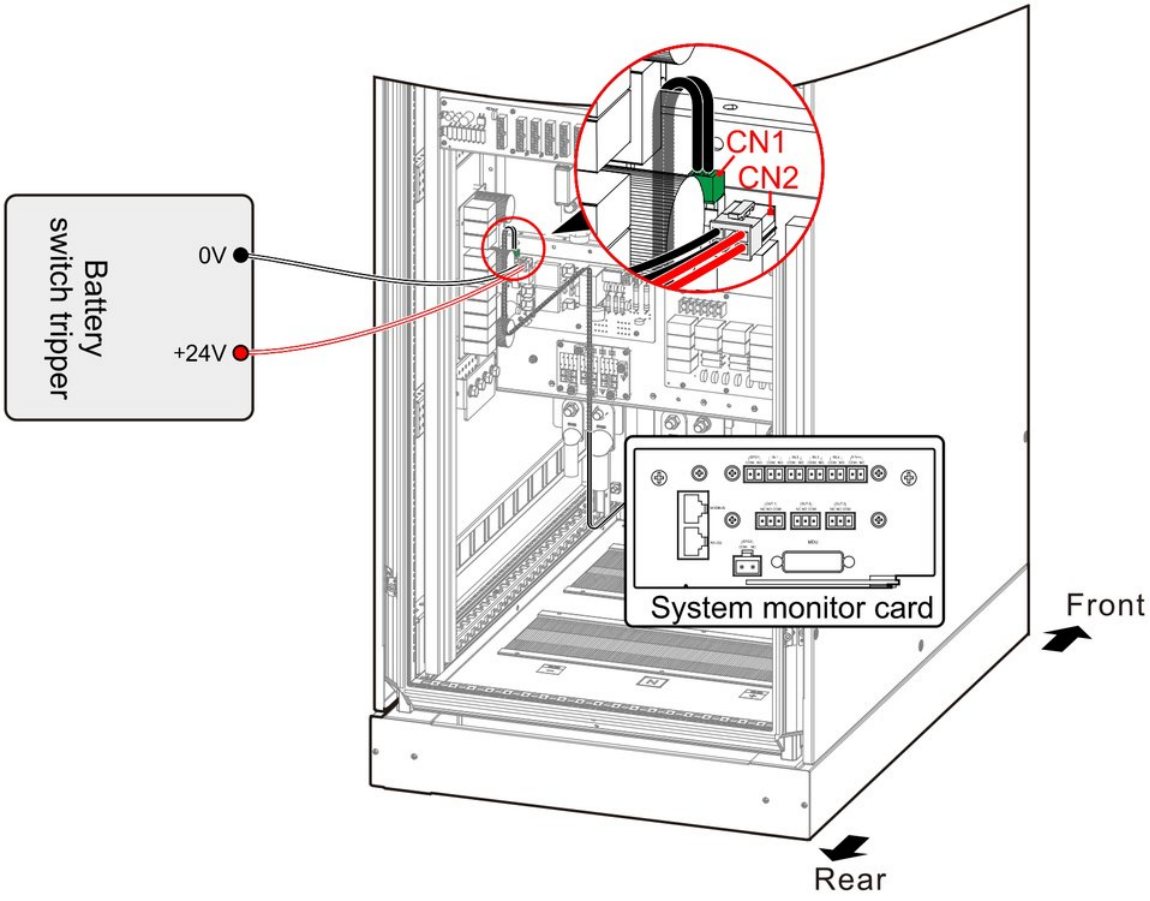

FIGURE 3-26 CN1, CN2 terminal connection

NOTE

The CN1 is connected to the output dry contact of system monitor card based on the touch screen configuration. Draw the CN1 wires through the knock-off holes of bottom plate when wiring. The wiring path of the CN2 is the same to the CN1.

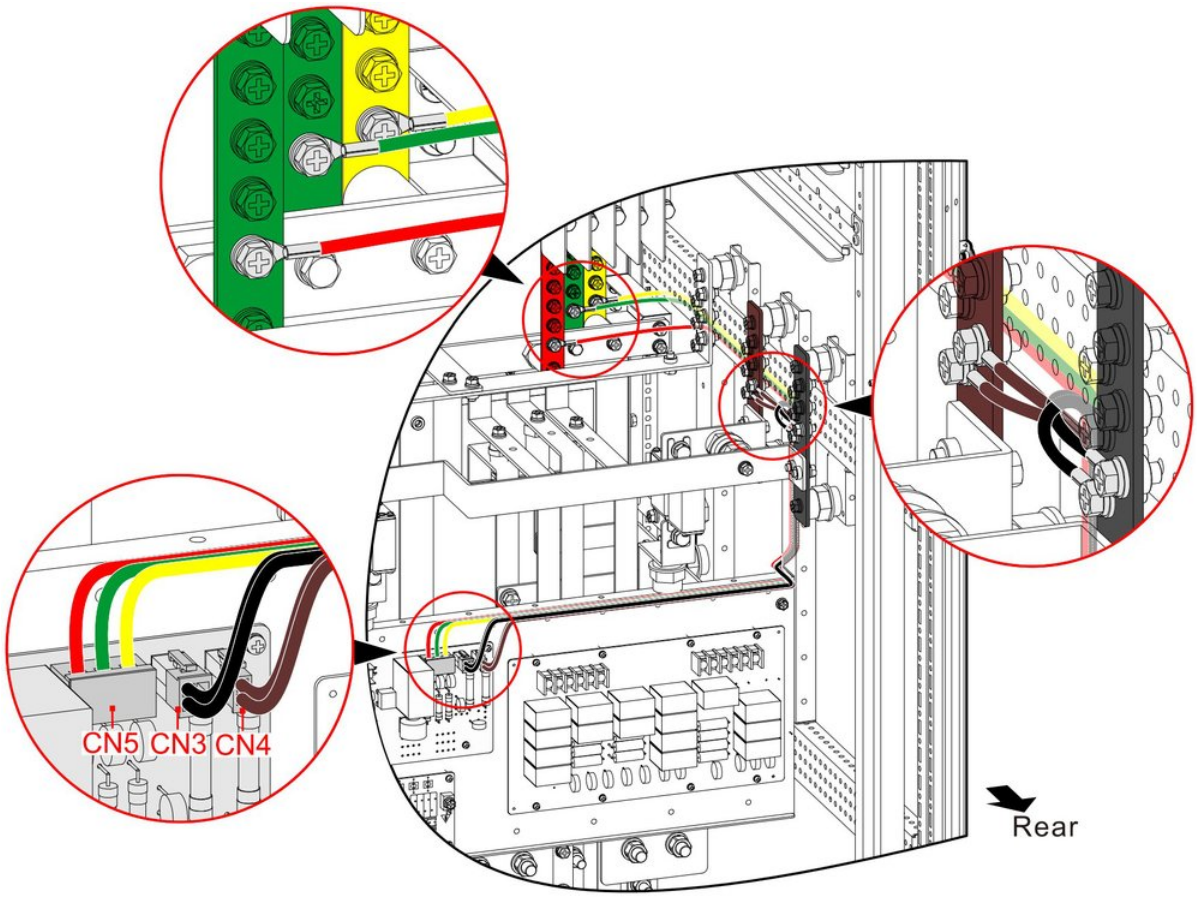

FIGURE 3-27 CN3, CN4, CN5 terminal connection

CAUTION

Avoid the wire contacting copper bar when wiring, or it may cause wire abnormal for copper bar hot.

3.5 Electrical Connection

In default, the wiring method of the IST6-120 is bottom wiring. When it needs the top wiring(the cross-sectional area of wire is less than 120mm2), it needs to select the top wiring accessory to realize the top wiring.

PROCEDURE

1. Open the door of UPS, and dismantle the bottom wiring plate and rear plate, as shown in Figure 3-28.

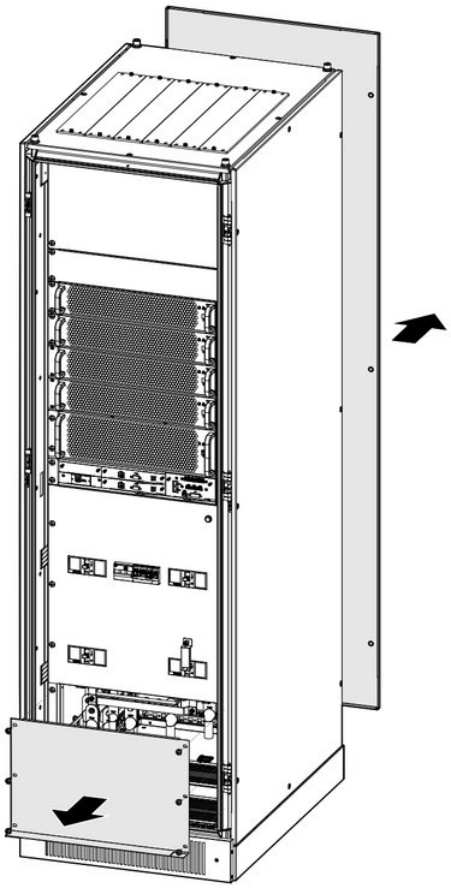

FIGURE 3-28 Dismantle the bottom wiring plate and rear plate

2 Draw the input wires, output wires, battery wires through the bottom wiring holes(as shown in Figure 3-29), connect them to the corresponding copper bar(as shown in Figure 3-30) respectively, and fasten the bolts.

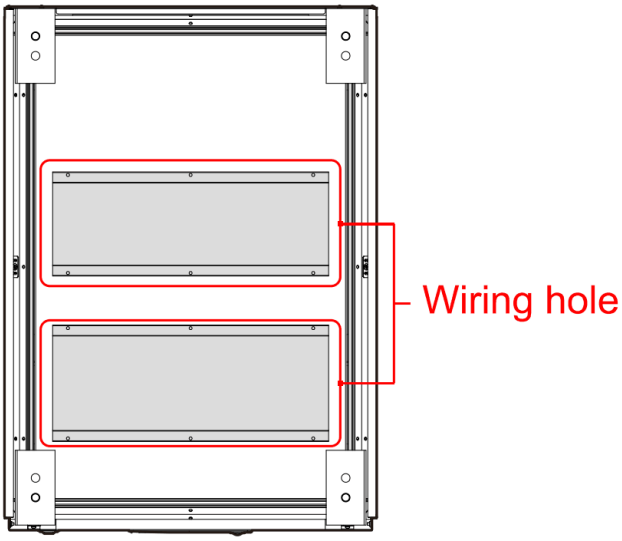

FIGURE 3-29 The position of wiring hole

NOTE

There has two neutral wire copper bars, the neutral wires of input and output connect to one neutral wire copper bar, the neutral wires of battery connect to the other neutral wire copper bar.

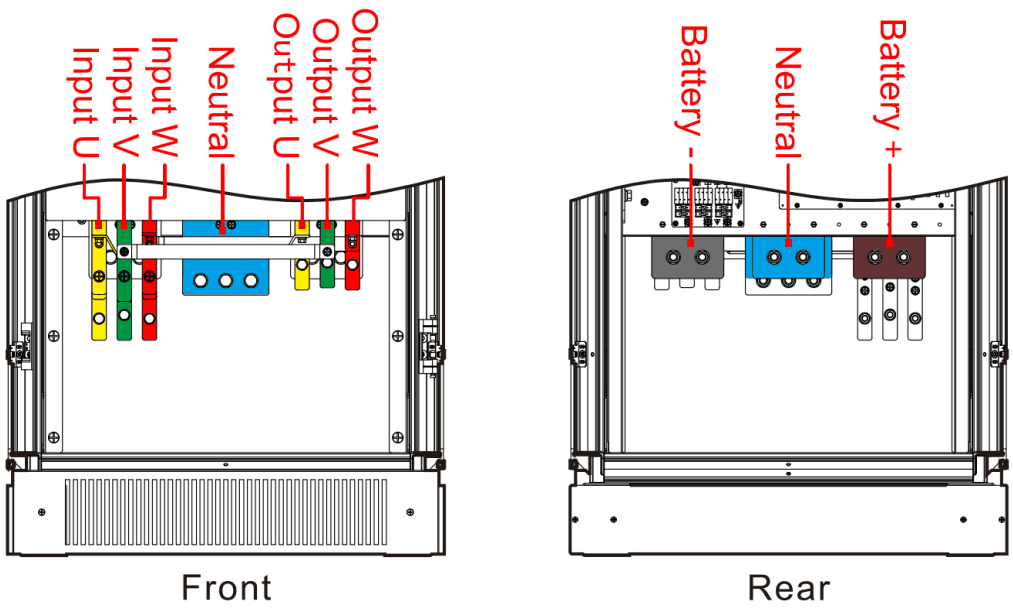

FIGURE 3-30 The position of the copper bar

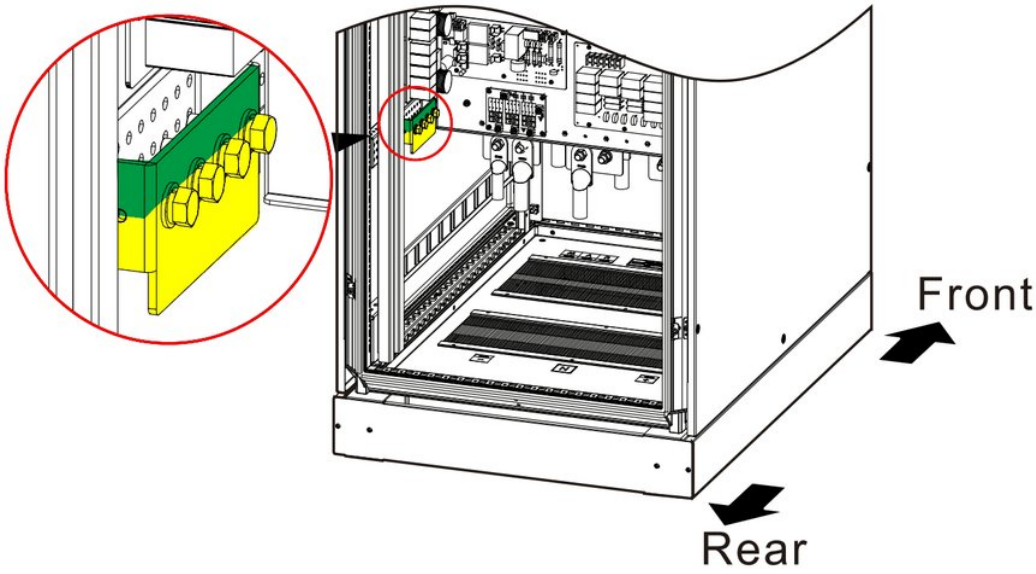

FIGURE 3-31 The position of the grounding copper bar

> **NOTE**
> When the mains and bypass is with the same power, the bypass copper bar doesn't need to connect wires.

When the mains and bypass is with the different powers, dismantle the copper bars(as shown in Figure 3-32) for the mains and bypass with the same power.

> **NOTE**
> The copper bars near the front door of UPS are the bypass copper bars. The back copper bars are the mains copper bars.

When the top wiring component is selected, draw the wires through the top wiring holes of UPS, the wiring diagram is as shown in Figure 3-33.

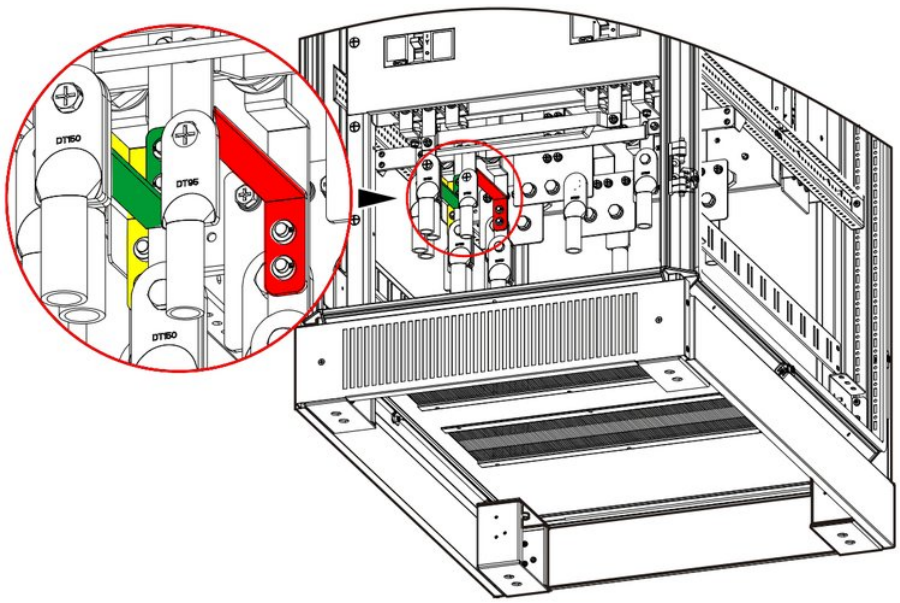

FIGURE 3-32 Dismantle the copper bars for the mains and bypass with the same power

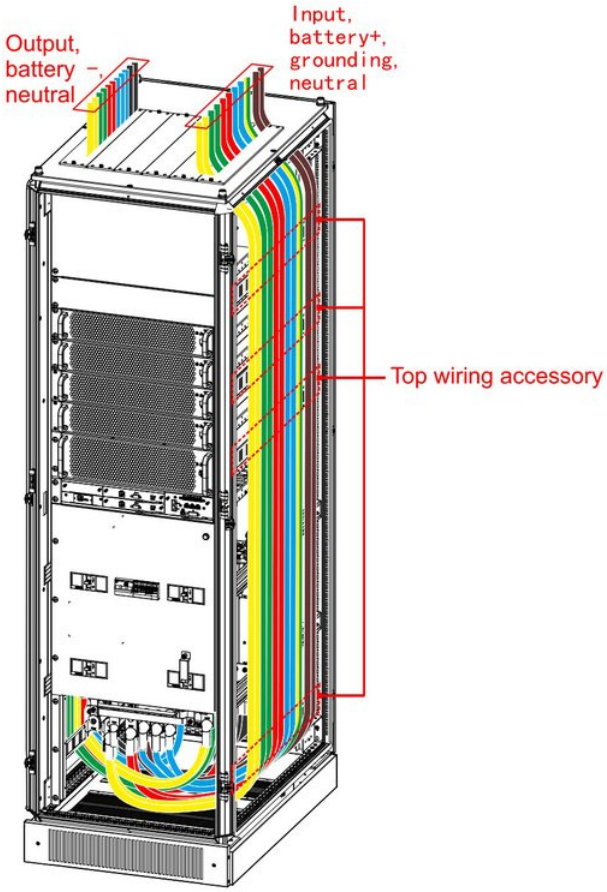

FIGURE 3-33 Top wiring diagram(top wiring accessory is selected)

NOTE

When the wiring method is top wiring, draw the output wires, battery - wires, neutral wire(three pieces) through the left of UPS, and draw the input wire, battery + wires, neutral wire(two pieces) through the right of UPS.

CAUTION

Add a DC switch when battery DC input, the wiring is as shown in Figure 3-34.

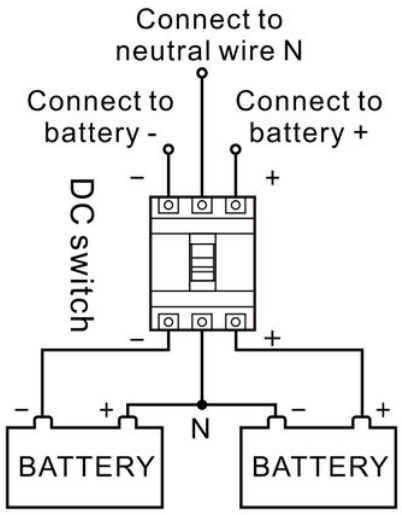

FIGURE 3-34 Battery wiring

3 After wiring, fill the empty part of the wiring hole with insulated fireproofing mud. Install the bottom wiring plate and rear plate, and close the front door.

3.6 Parallel System Connection

When user needs to perform the parallel system connection, please refers to Figure 2-20 and Figure 2-21. The following take two UPSs as example.

TOP WIRING

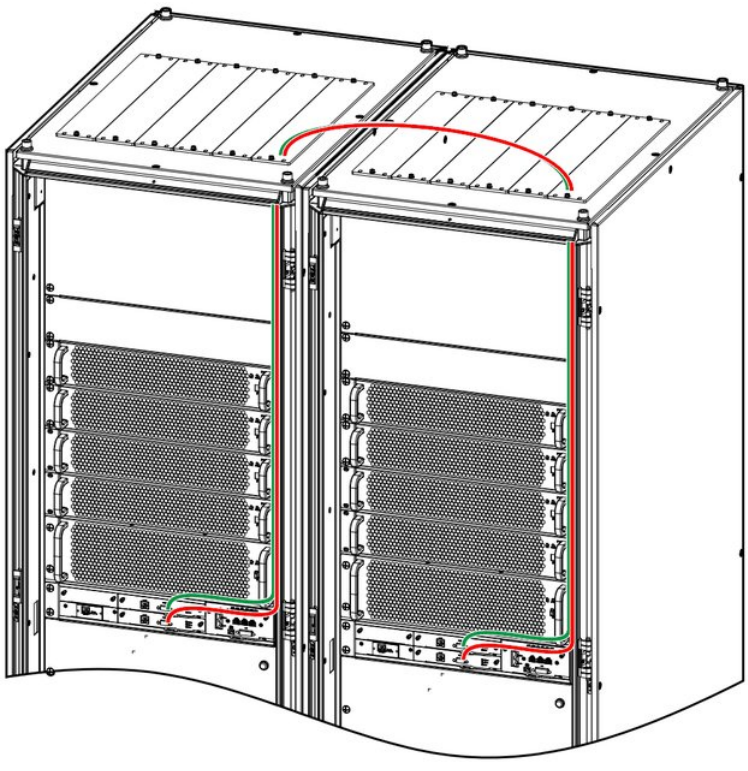

FIGURE 3-35 Parallel system connection diagram(top wiring)

> **NOTE**
> The wire color above is just used to distinguish the different ports, the actual wire color may not be the same as shown in the figure.

BOTTOM WIRING

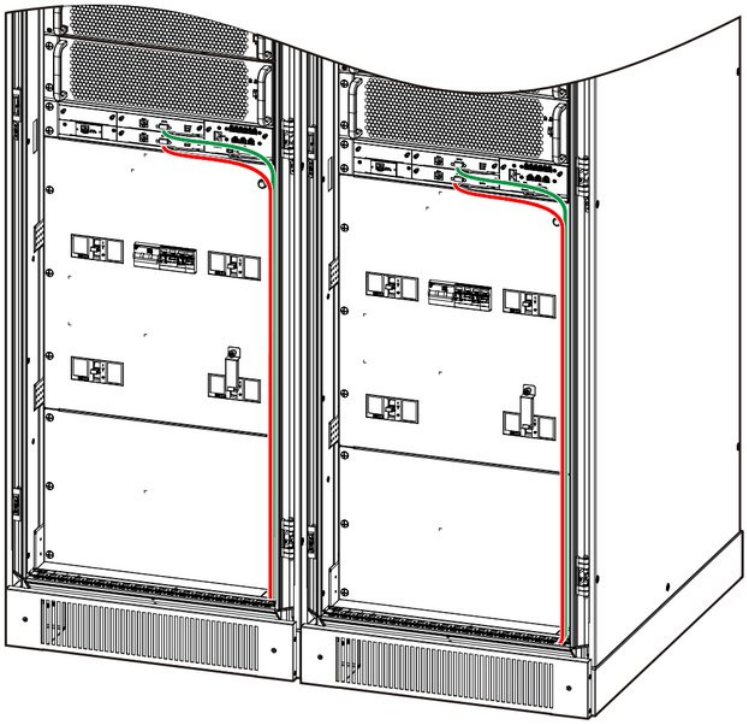

FIGURE 3-36 Parallel system connection diagram(bottom wiring)

> **NOTE**
> The wire color above is just used to distinguish the different ports, the actual wire color may not be the same as shown in the figure.

3.7 System Check and Test

3.7.1 Check Electrical Connection

After completing the electrical connections, check the following items.

TABLE 3-2 Check list

No.	Check item	Result
1	Check if the color of AC wires is in accordance with the specification.	Yes☐ No☐
2	Check if the wiring of the UPS is firmly.	Yes☐ No☐
3	Check if the safety mark of AC distribution unit is complete.	Yes☐ No☐
4	Check if the wire connection is firmly.	Yes☐ No☐
5	Check that the batteries are connected with the correct polarity and sequence.	Yes☐ No☐
6	Check if the wire mark is correct.	Yes☐ No☐
7	Check if the wiring is neat and the wire connection is in accordance with the specification.	Yes☐ No☐
8	Check if the UPS installation and wiring is good for transformation, expansion and maintenance in future.	Yes☐ No☐
9	Check if the UPS has any foreign matter. (E.g. The rear of module, the top of UPS, wiring terminal bar, switch and so on.)	Yes☐ No☐

3.7.2 UPS Test

Switch off the mains input to simulate the situation of mains fault. When mains fault, it will turn to battery inverter from mains inverter, and the touch screen will show the alarm and the buzzer will beep once every 1s.

3.7.3 Connect Load

After the UPS works stably, turn on the load. Start large power devices first, then small power device. Some devices has large starting current which may cause overload protection (or bypass operation), it is better to start these devices first.

CHAPTER 4

04 Touch Screen Operation

This chapter mainly introduces the working parameters, working status and system setting of the UPS.

IN THIS CHAPTER

4.1 Menu Hierarchy
4.2 Main Page
4.3 System Work Status Display
4.4 Buzzer Control Function
4.5 Monitor Page
4.6 Set Manage
4.7 Information Manage
4.8 ON/OFF

NOTE

The value in the figures of this chapter is just for illustration, for real page please see the actual product.

4.1 Menu Hierarchy

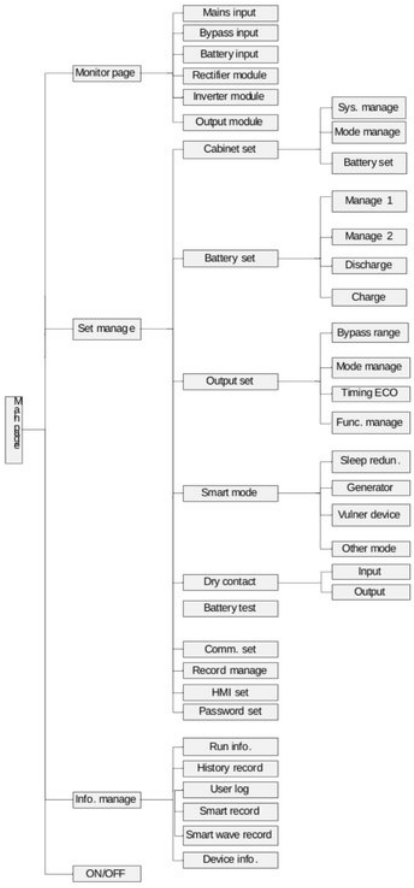

FIGURE 4-1 Menu hierarchy

Panel, indicators and touch screen: quick guide

The inverter is started and stopped with the ON and OFF button pairs (both buttons held together for 3 s) or from the ON/OFF page of the touch screen.

QUICK GUIDE **Start the UPS** Section 5.3.2

1. **Ready switches** — Set the ready switches of the bypass module (BM) and of every power module (PM) to the ready position
2. **Switches** — Bypass, then mains, then external battery switch: the UPS starts on bypass
3. **Alarms** — Enter the user password and check on the main page that no fault alarm is shown
4. **Indicators** — Wait until the run indicators of all power modules flash green slowly
5. **ON + ON** (3 s) — Press the ON button pair, or tap the ON/OFF icon and confirm
6. **OUTPUT** — Switch on the output switch, check the output voltage, then the loads, largest first

QUICK GUIDE **Shut down** Section 5.3.3

1. **Loads off** — Switch off the load
2. **OFF + OFF** (3 s) — Press the OFF button pair, or tap the ON/OFF icon and confirm: the UPS goes to bypass
3. **Switches** — Battery, mains, bypass, then output switch off
4. **Indicators** — Wait until the touch screen and all indicators are off

QUICK GUIDE **Cold start from the battery** Section 5.3.2

1. **Battery switch** — Switch on only the external battery switch
2. **Cold start** (> 3 s) — Press the battery cold-start button on the bypass module

QUICK GUIDE **Mute the buzzer** Section 4.4

1. **Buzzer** — Tap the buzzer icon on the menu bar to mute or unmute

A new fault after muting turns the buzzer on again.

4.2 Main Page

After powering on, it will enter the main page, as shown in Figure 4-2.

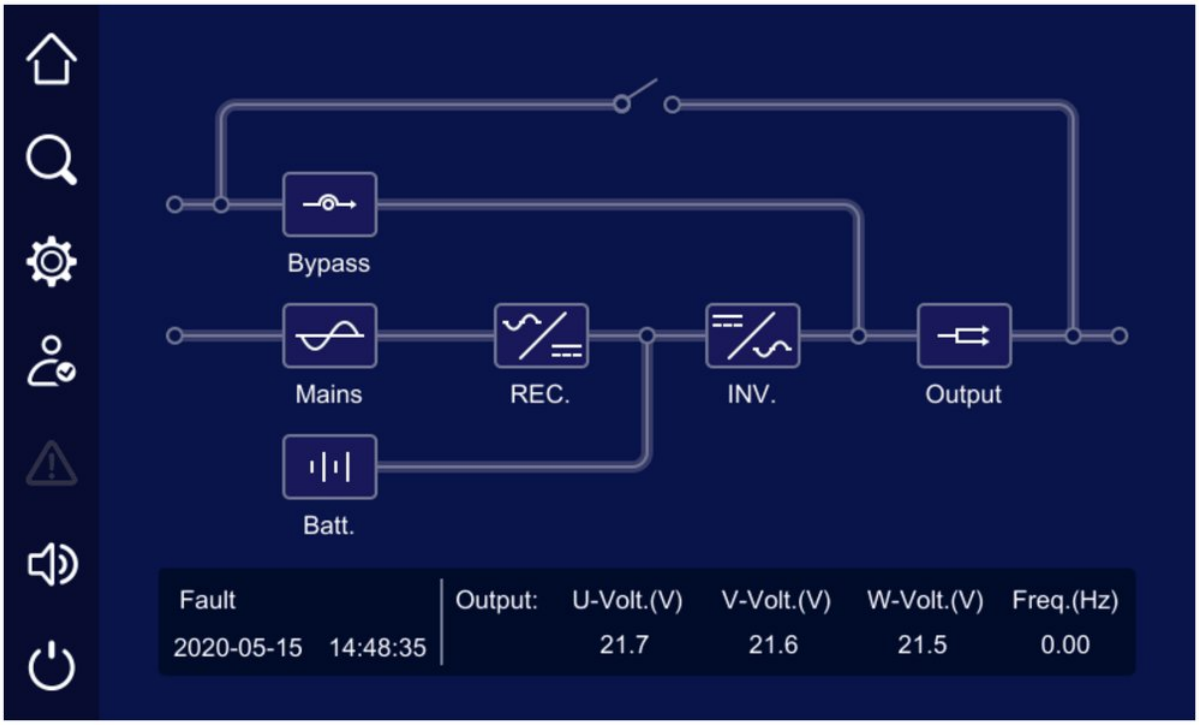

FIGURE 4-2 Main page

The main page gives an overview of the system. The icons on the main page mean:

: System bypass input. When bypass input abnormal, the icon flickers and shows as .

: System mains input. When mains input abnormal, the icon flickers and shows as .

: Rectifier information. Click the icon, you can select and check the rectifier information of each module.

: Inverter information. Click the icon, you can select and check the inverter information of each module.

: Battery status. When battery abnormal, the icon flickers and shows as .

: System output status. When output abnormal, the icon flickers and shows as .

: Back to main page.

: Information record.

: System parameter setting.

: Login.

: Buzzer control.

: Alarm.

: ON/OFF.

The working status and energy flow on the main page shows the system running status and module running condition directly.

4.3 System Work Status Display

The system working status includes: fault protection, shutdown, bypass output, inverter output, grid-tied aging running, ECO bypass output, transducer INV. output, maintenance bypass output, grid-tied aging off. Each page is as shown from Figure 4-3 to Figure 4-11.

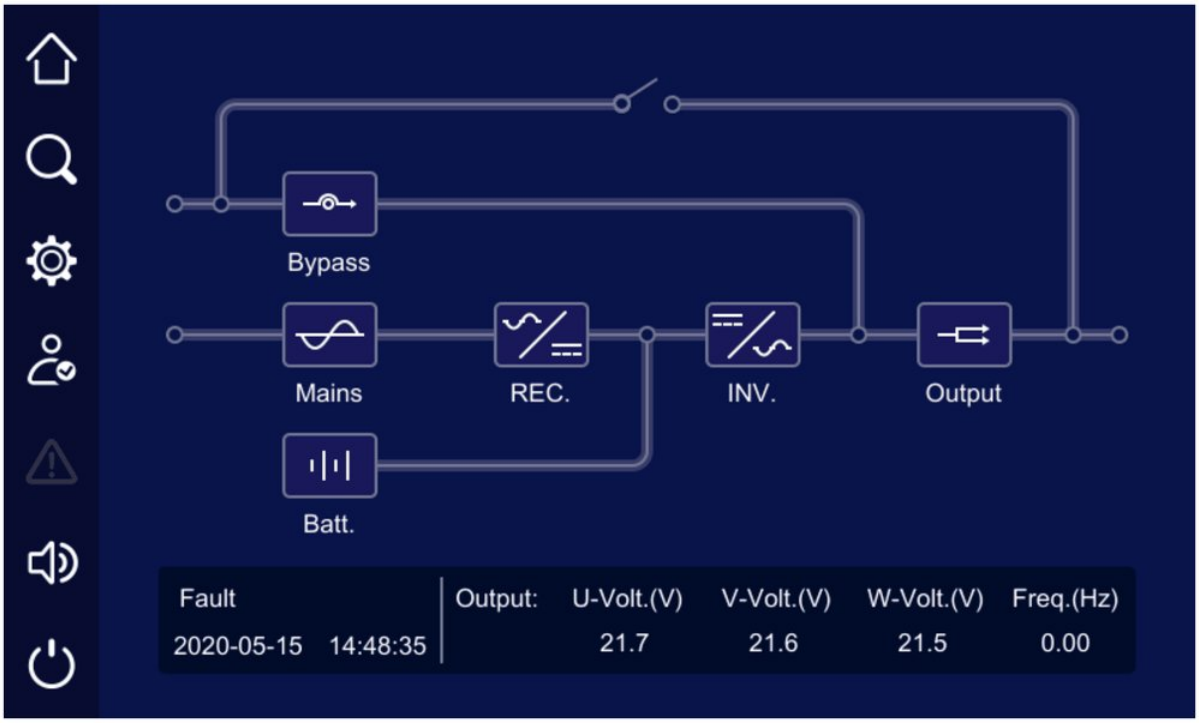

FIGURE 4-3 Fault protection, with no output

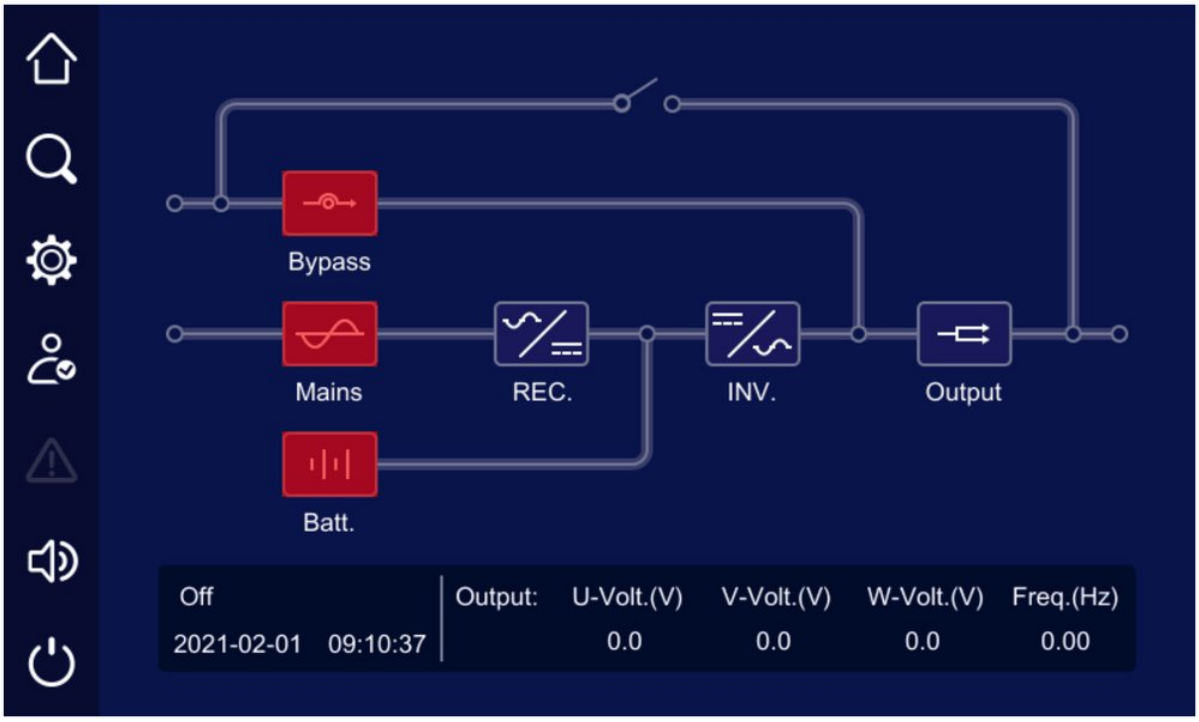

FIGURE 4-4 Shutdown

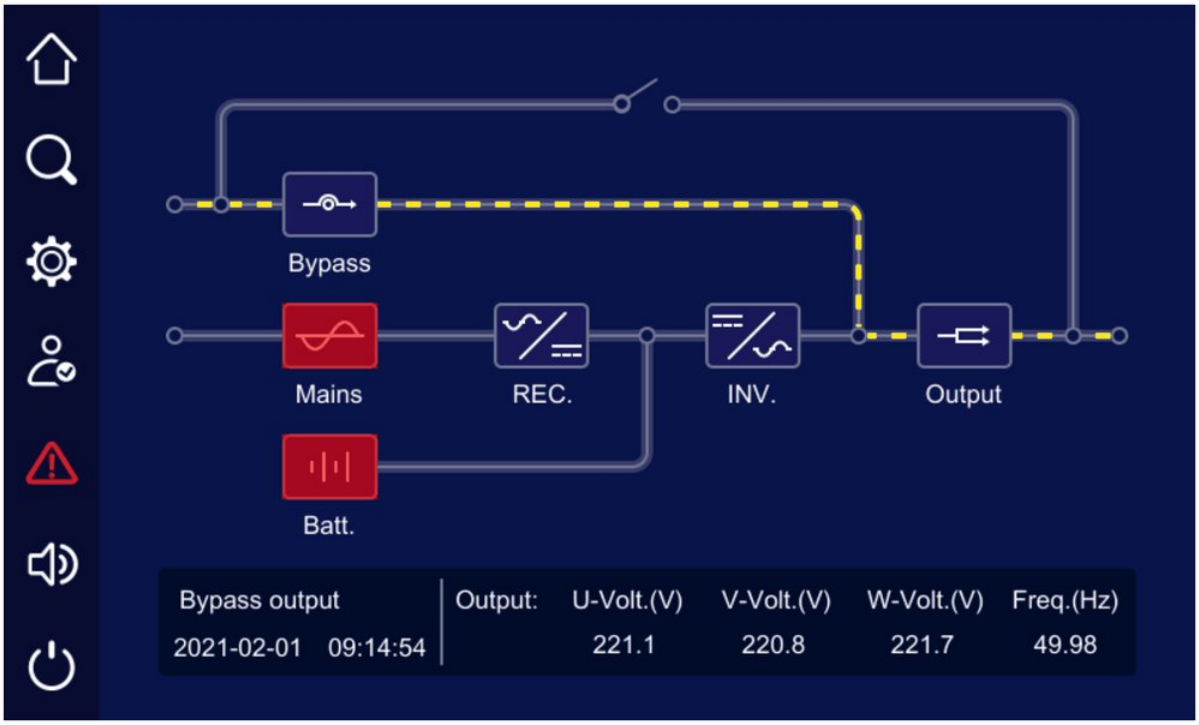

FIGURE 4-5 Bypass output

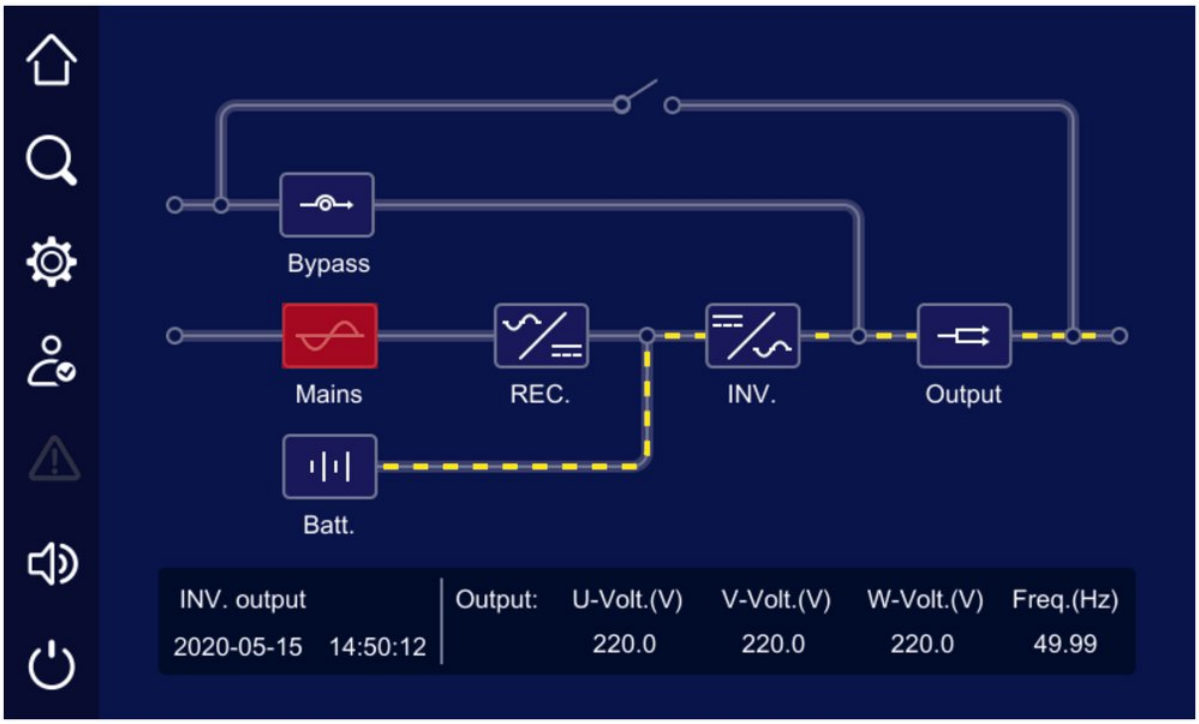

FIGURE 4-6 Battery INV. output

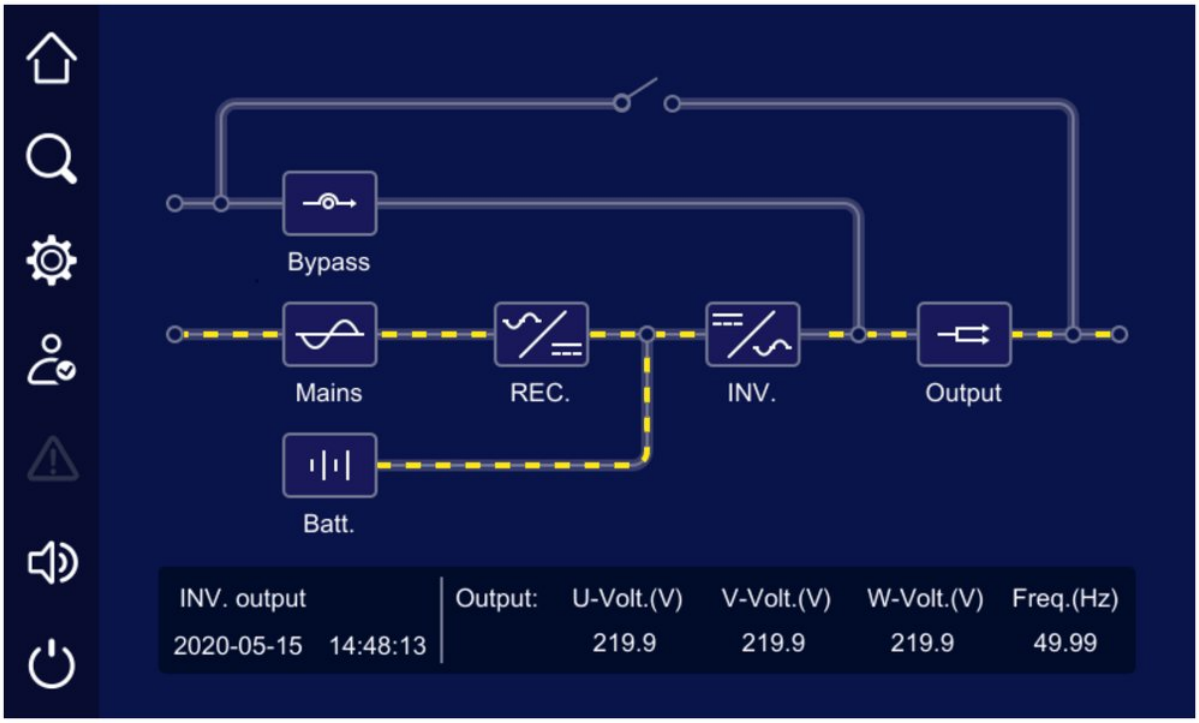

FIGURE 4-7 Mains INV. output

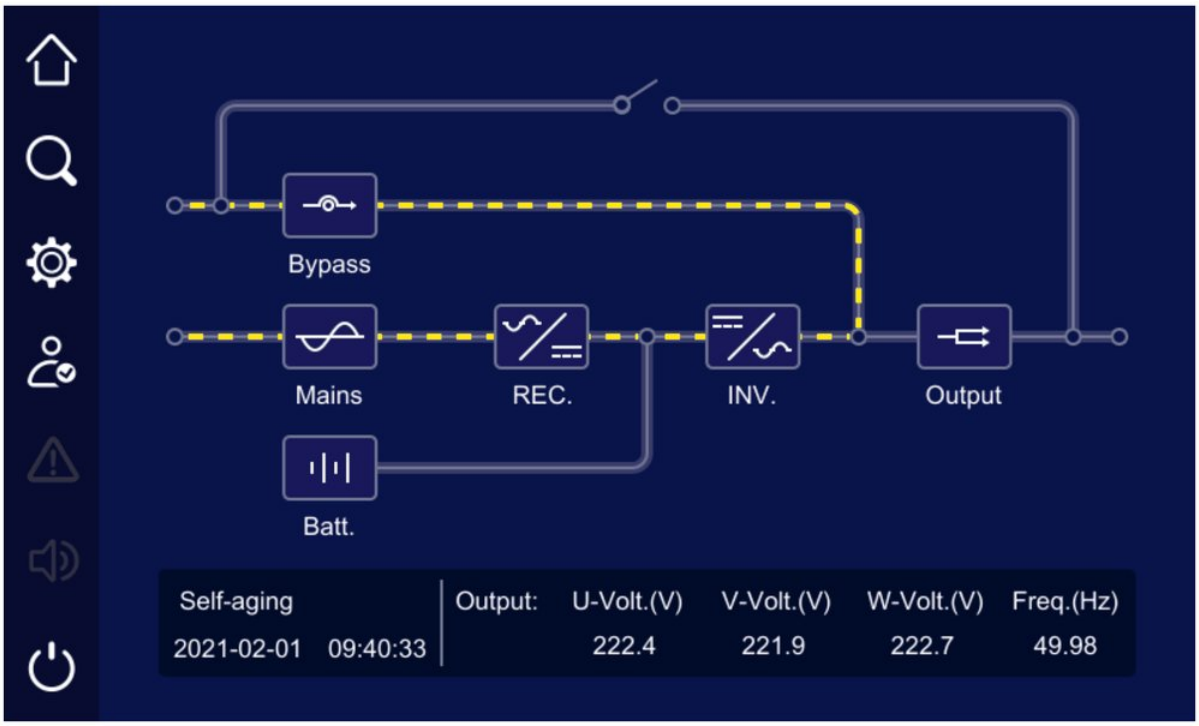

FIGURE 4-8 Grid-tied aging running

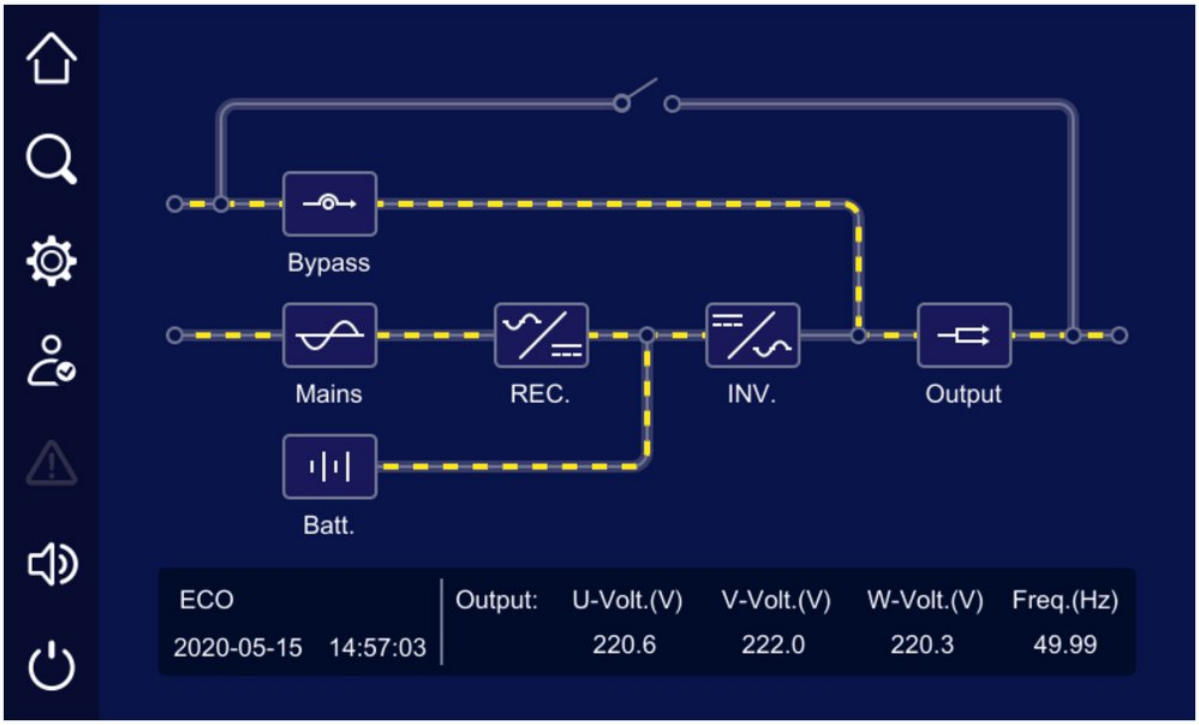

FIGURE 4-9 ECO bypass output

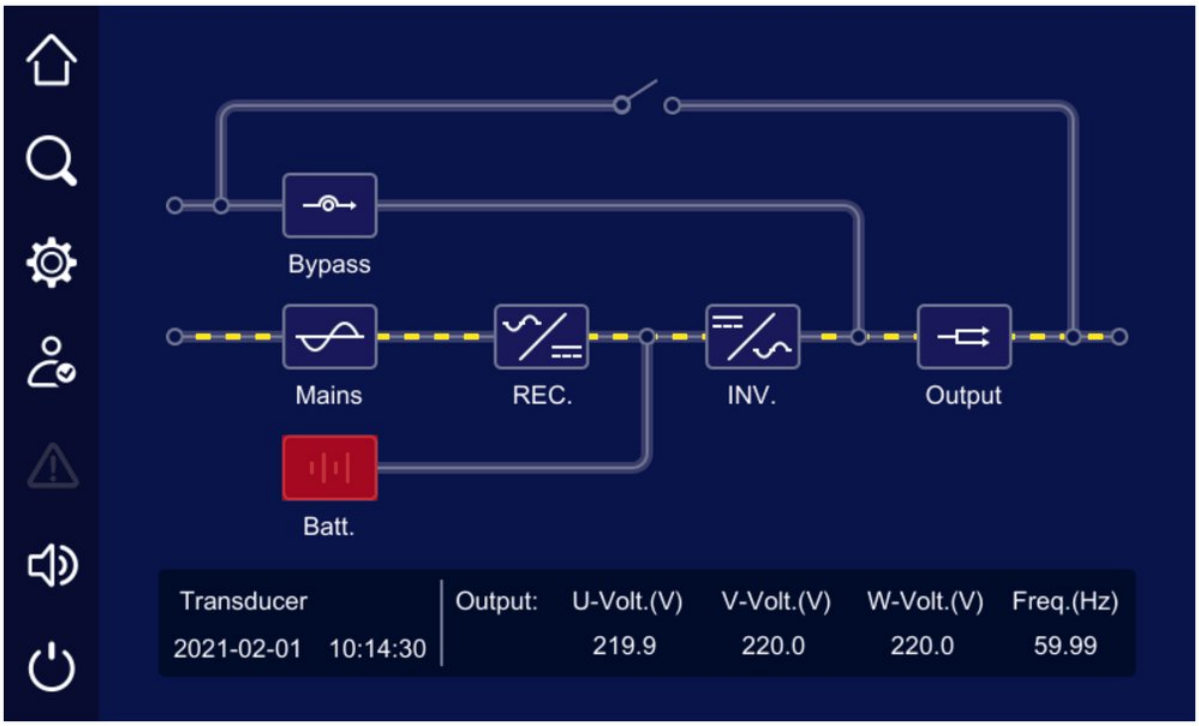

FIGURE 4-10 Transducer INV. output

When module or system abnormal, the main page will show “Fault alarm” indicator, click the “Fault alarm”, it will show the current fault information, as shown in Figure 4-12.

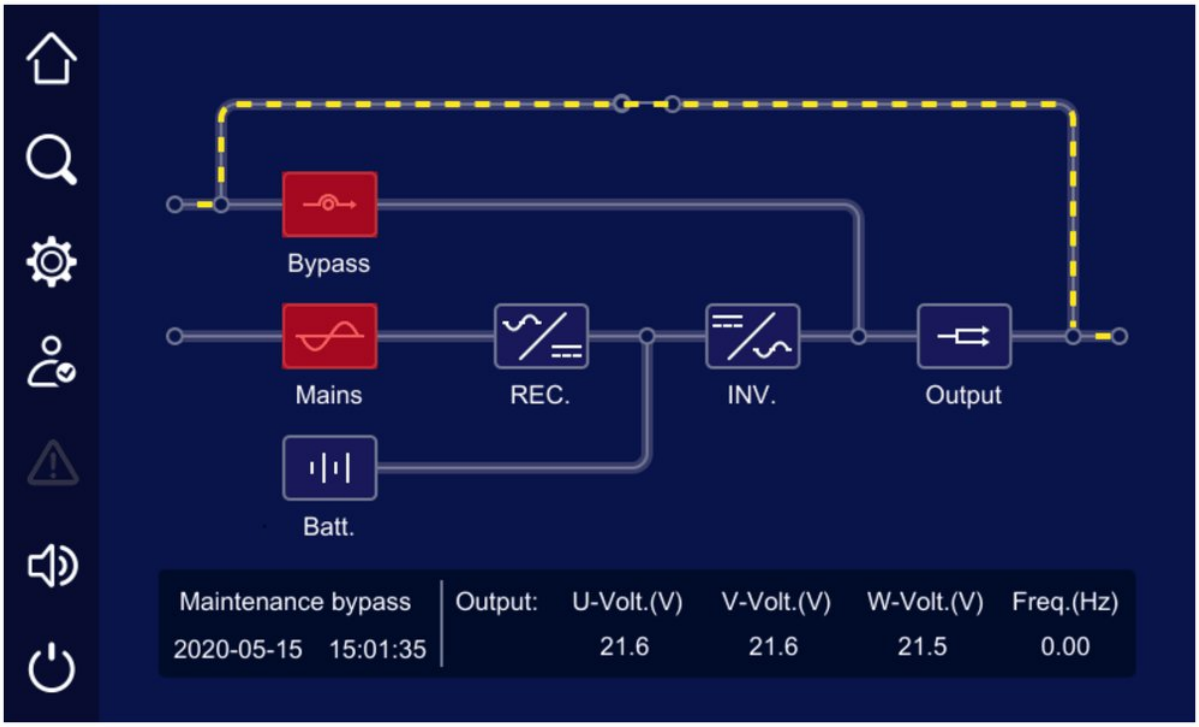

FIGURE 4-11 Maintenance bypass output

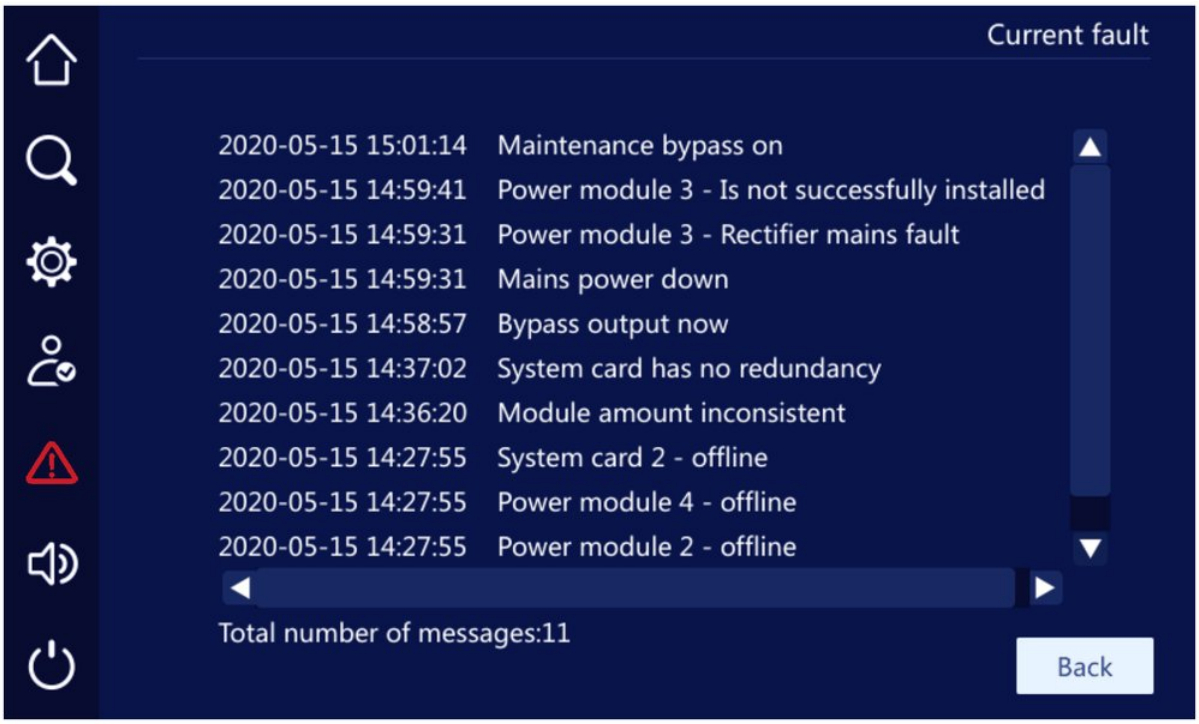

FIGURE 4-12 Current fault information

4.4 Buzzer Control Function

When module or system abnormal, the system will send sound alarm. User can click the  icon at left to close or open the buzzer. After closed, if there is new fault, the buzzer will be opened automatically.

4.5 Monitor Page

4.5.1 Mains Input

In main page, click  icon, it will enter the mains information page, as shown in Figure 4-

1. In the page, it shows the mains phase voltage, mains line voltage, mains current, mains frequency and total input electricity.

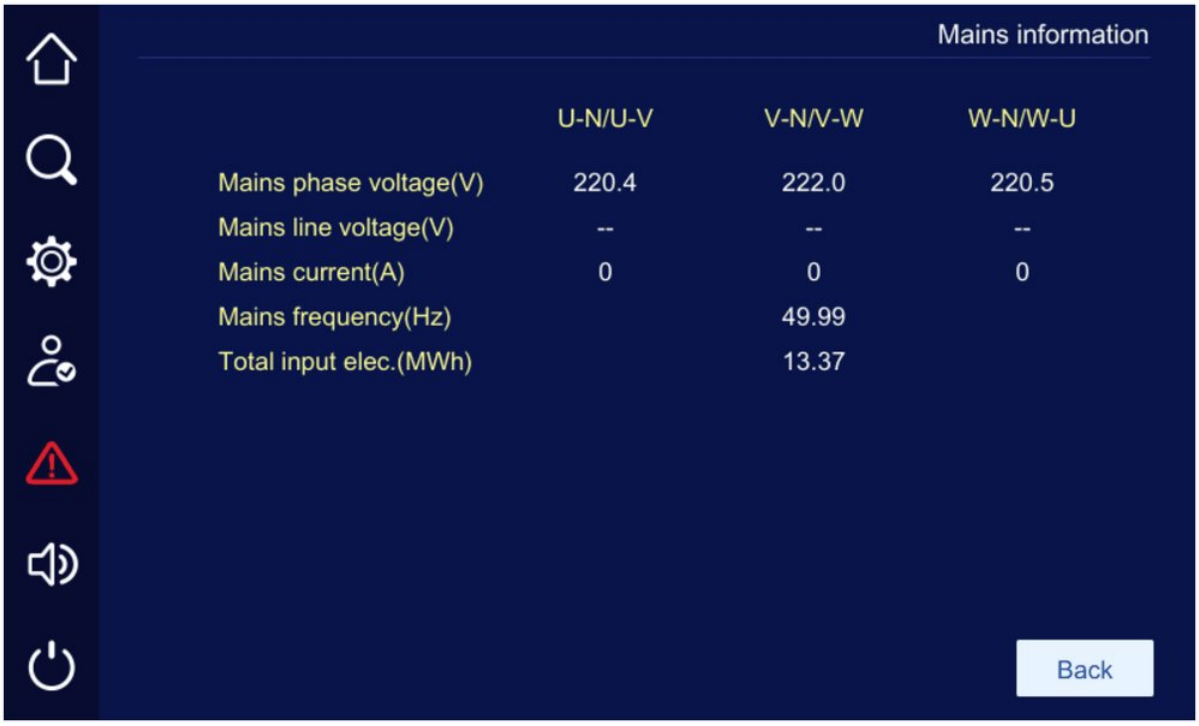

FIGURE 4-13 Mains information

4.5.2 Bypass Input

In main page, click  icon, it will enter the bypass information page, as shown in Figure 4-

1. In the page, it shows the bypass phase voltage, bypass line voltage, bypass current and bypass frequency.

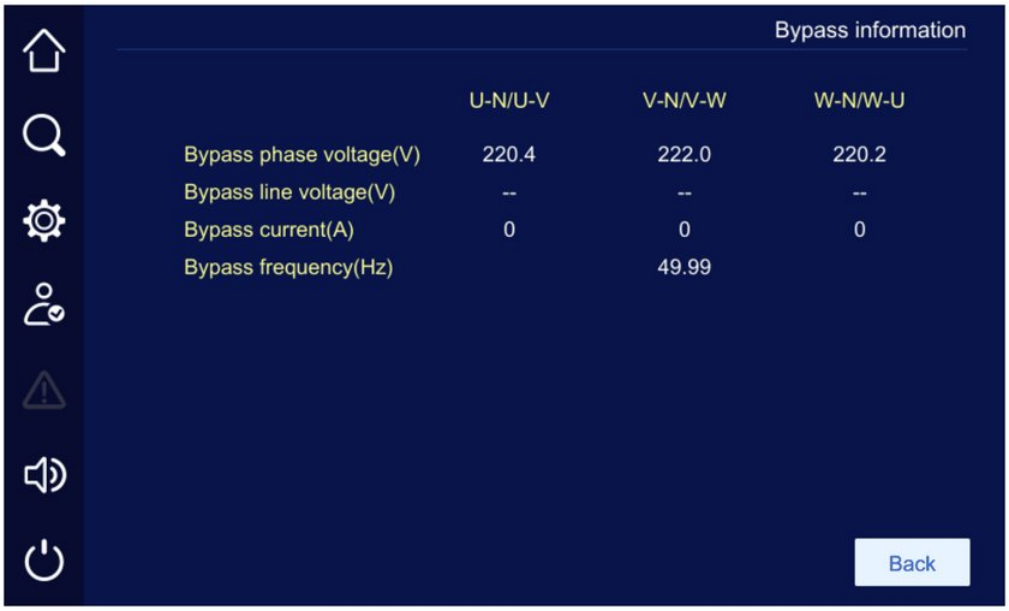

FIGURE 4-14 Bypass information

4.5.3 Battery Input

In main page, click  icon, it will enter the battery information page. If the battery is lead- acid cell, it shows the positive and negative battery voltage, battery charge/discharge current, battery remaining capacity, battery remaining time, battery temperature, battery status. It shows the charging current or discharging current according to battery charge/discharge status, as shown in Figure 4-15.

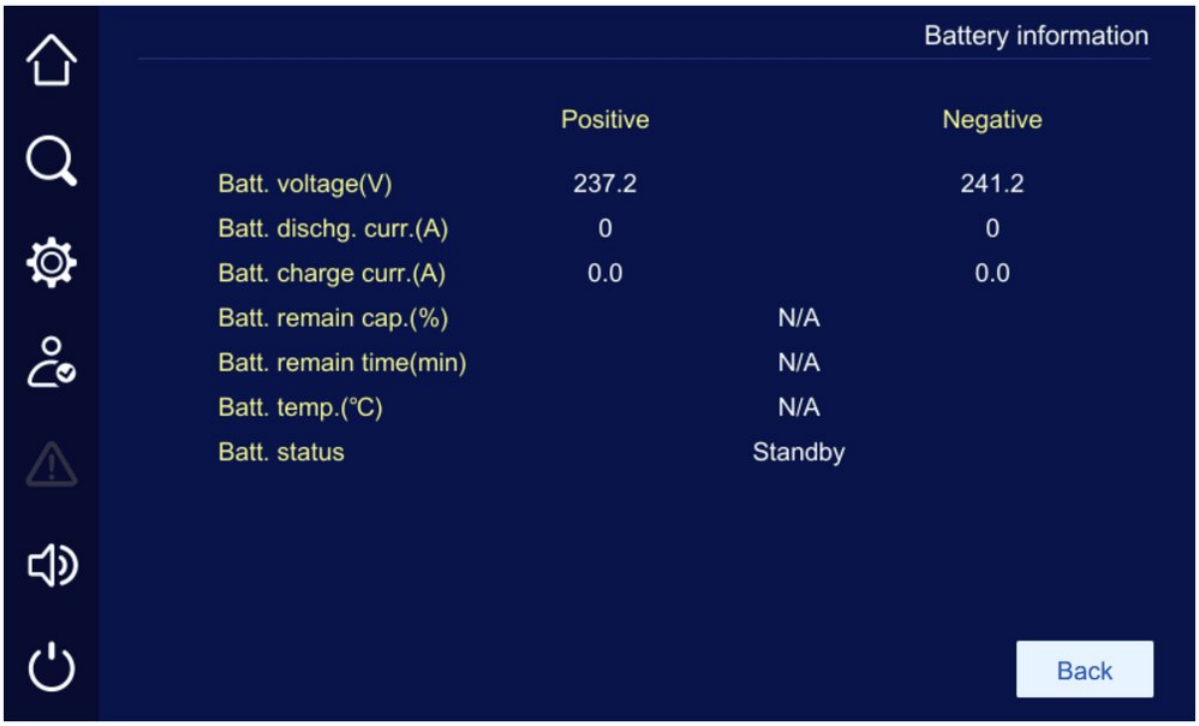

FIGURE 4-15 Battery information

4.5.4 REC. Module

In main page, click  icon, it will enter the REC. information page, as shown in Figure 4-16. Click “Module” button, it can view the information of each power module.

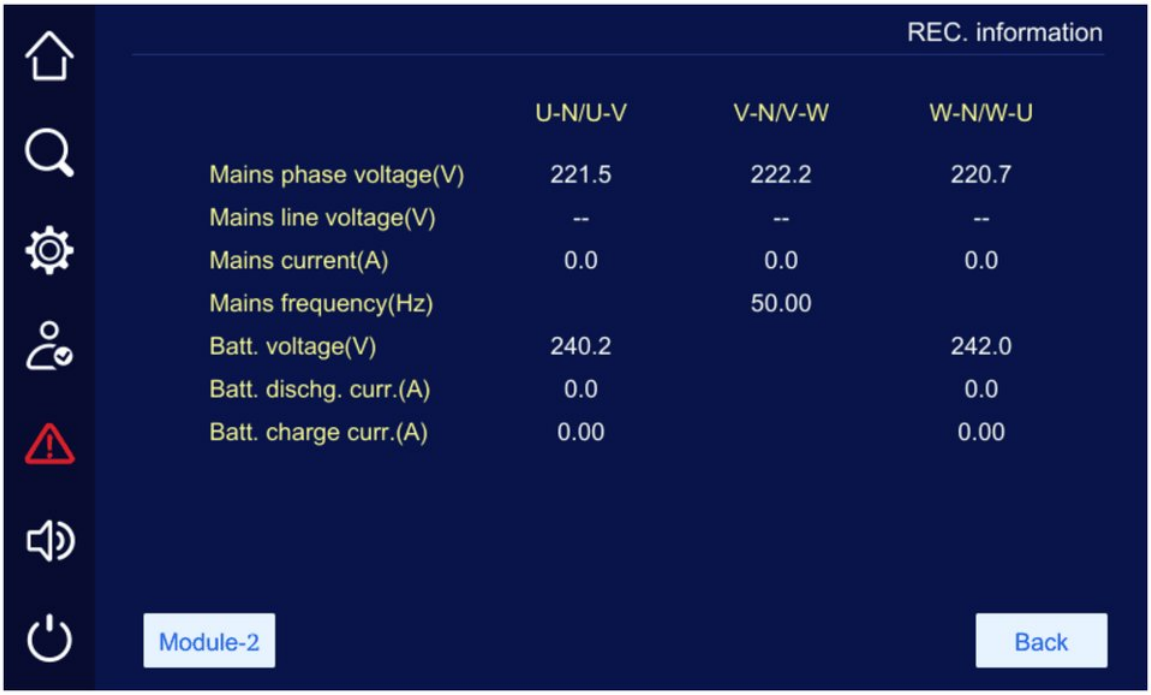

FIGURE 4-16 REC. information

4.5.5 INV. Module

In main page, click  icon, it will enter INV. information page, as shown in Figure 4-17.Click “Module” button, it can view the information of each power module.

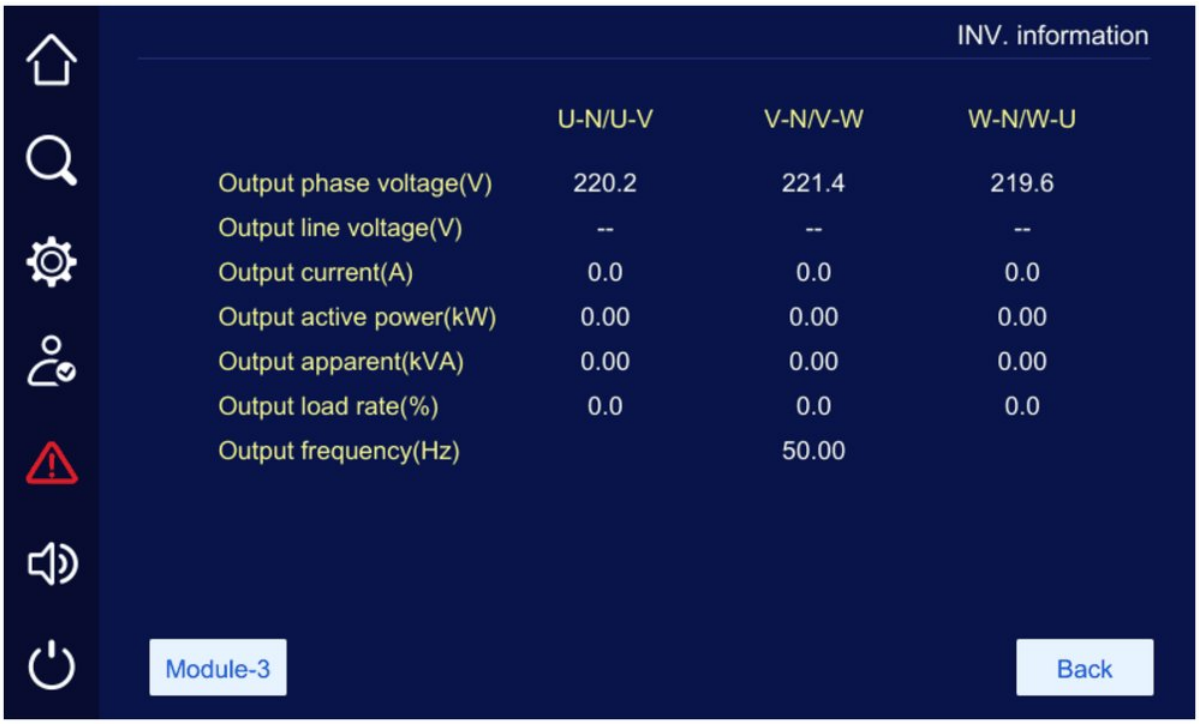

FIGURE 4-17 INV. information

4.5.6 Output Information

In main page, click  icon, it will enter the output information page, as shown in Figure 4-

1. In the page, it shows the output phase voltage, output line voltage, output current, output active power, output apparent power, output load rate, output power factor, output frequency and total output electricity.

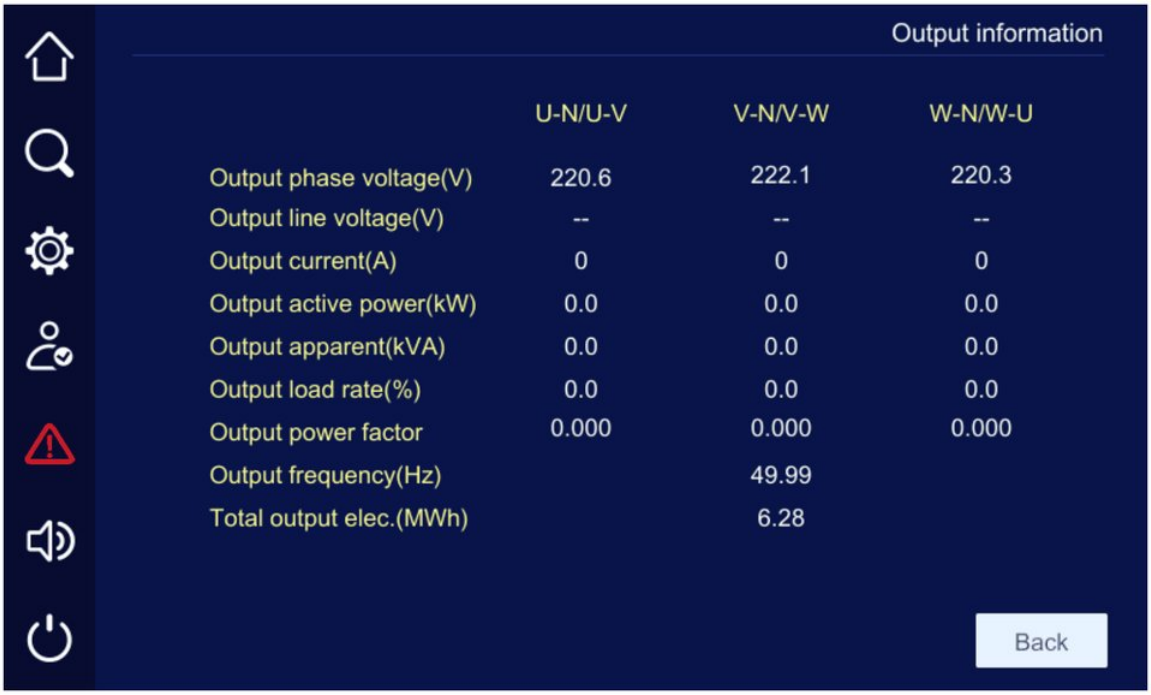

FIGURE 4-18 Output information

4.6 Set Manage

In main page, click icon, it will enter the set manage page, as shown in Figure 4-19. In the page, it shows cabinet set, battery set, battery test, output set, smart mode, dry contact, HMI set, password set, comm. set and record manage.

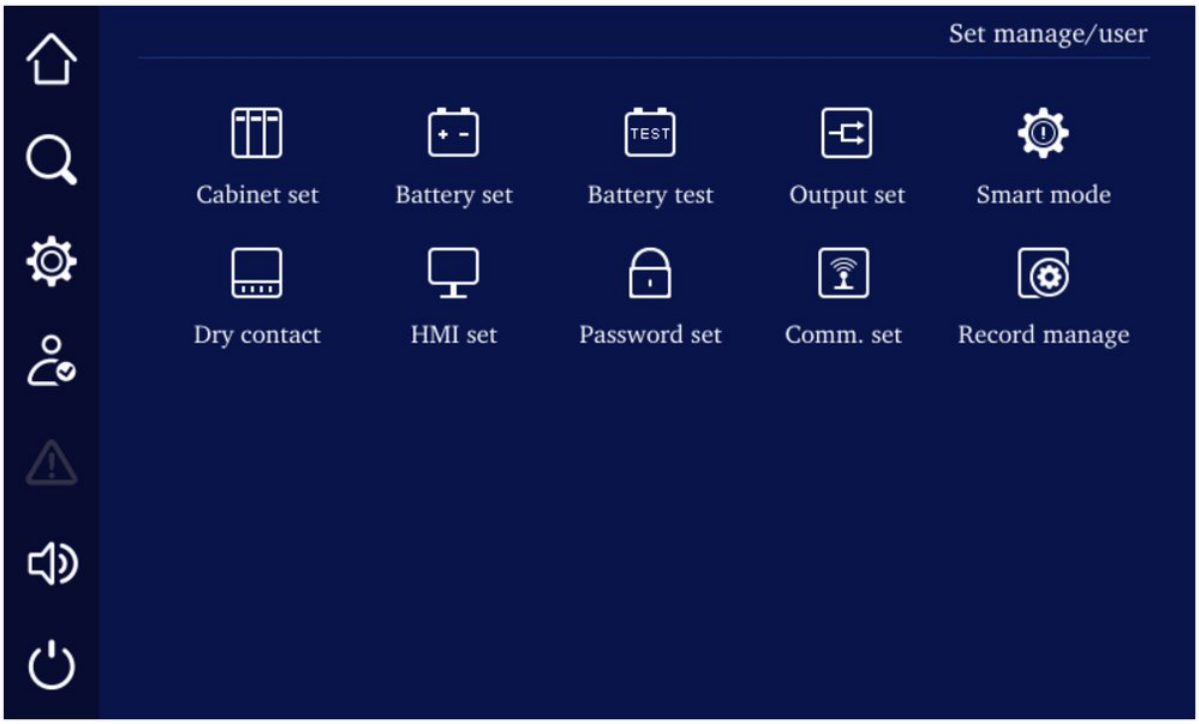

FIGURE 4-19 Set manage

4.6.1 Cabinet Set

In set manage page, click icon, it will enter the cabinet set page, as shown in Figure 4-20.

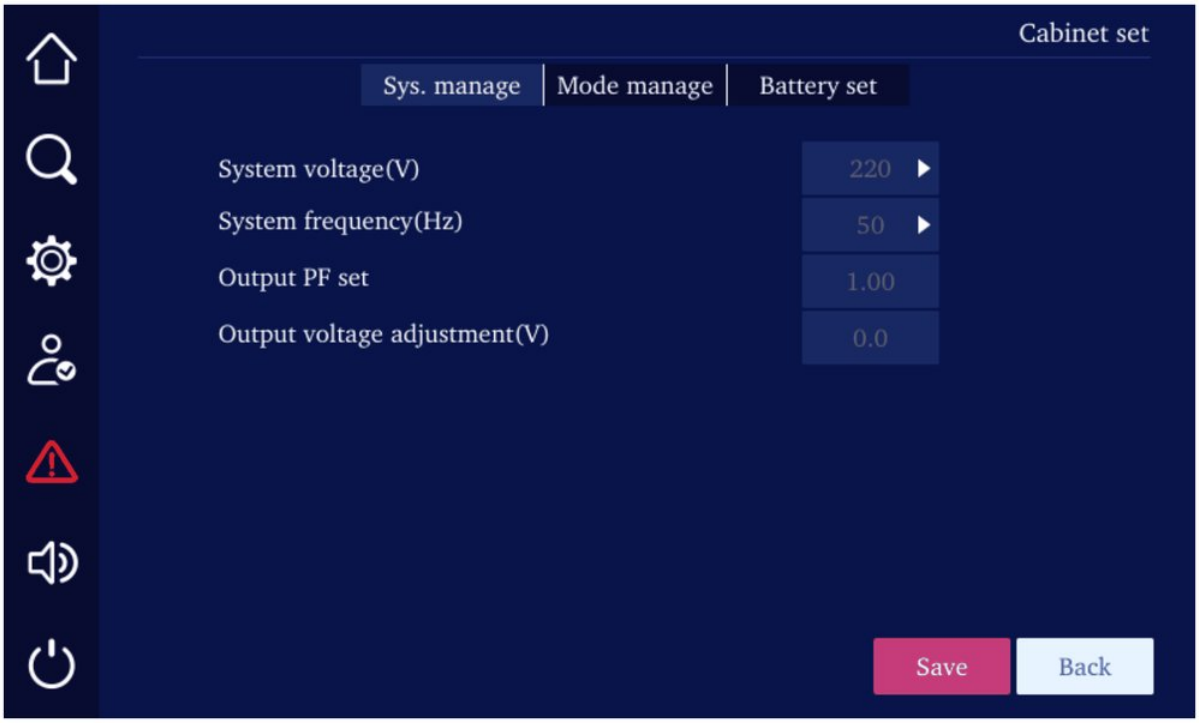

FIGURE 4-20 Cabinet set

NOTE

Battery cells setting: In the cabinet set page, click **battery set** to perform the battery cells setting, as shown in Figure 4-21.

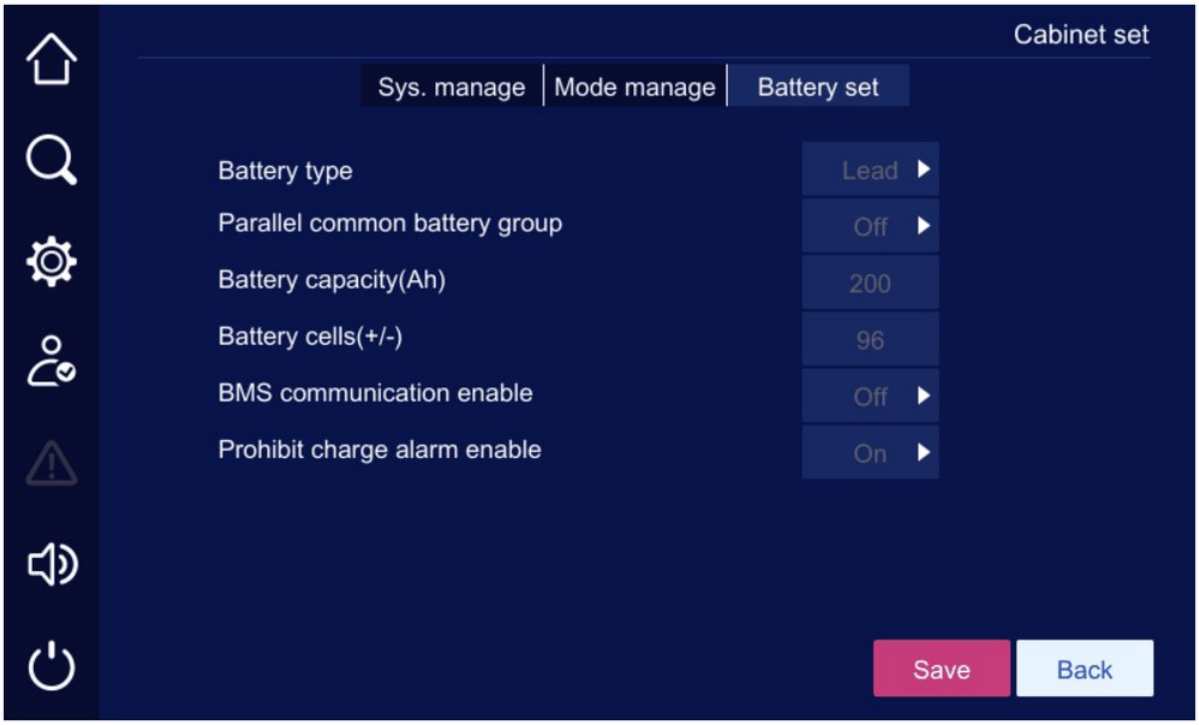

FIGURE 4-21 Cabinet set-battery set

4.6.2 Battery Set

In set manage page, click  icon, it will enter the battery set page, as shown in Figure 4-22.

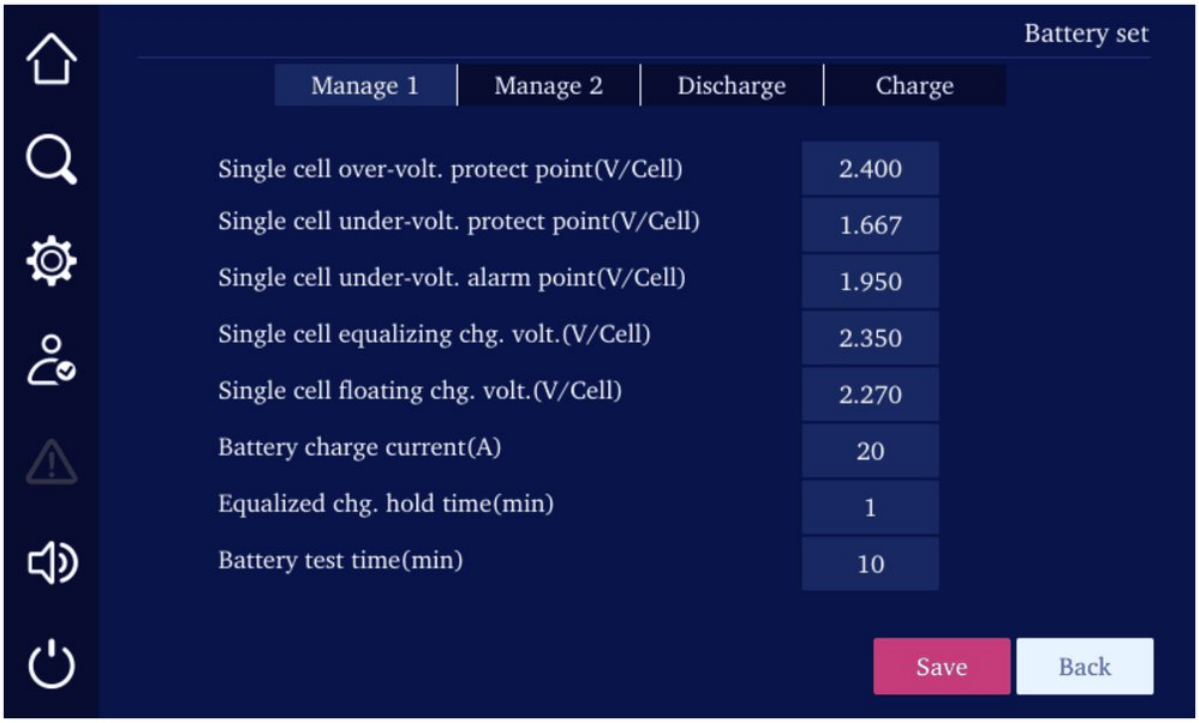

FIGURE 4-22 Battery set

4.6.3 Output Set

In set manage page, click 

icon, it will enter the output set page, as shown in Figure 4-23.

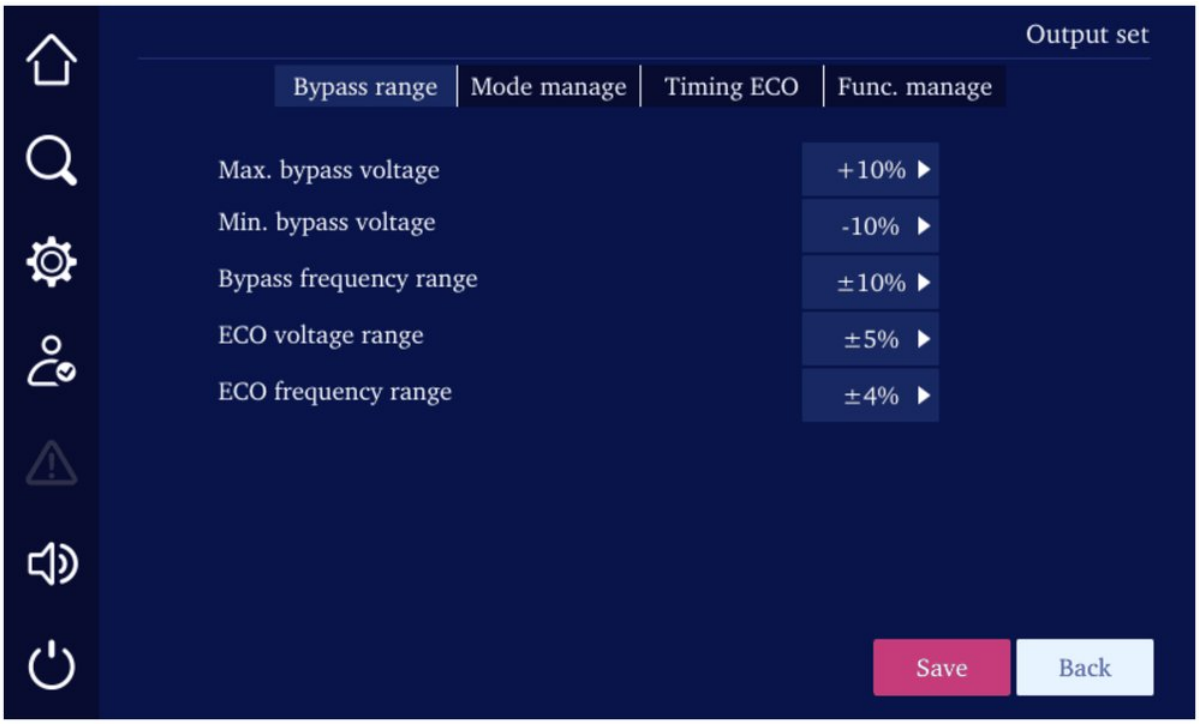

FIGURE 4-23 Output set

4.6.4 Smart Mode

In set manage page, click 

icon, it will enter the smart mode page, as shown in Figure 4-24.

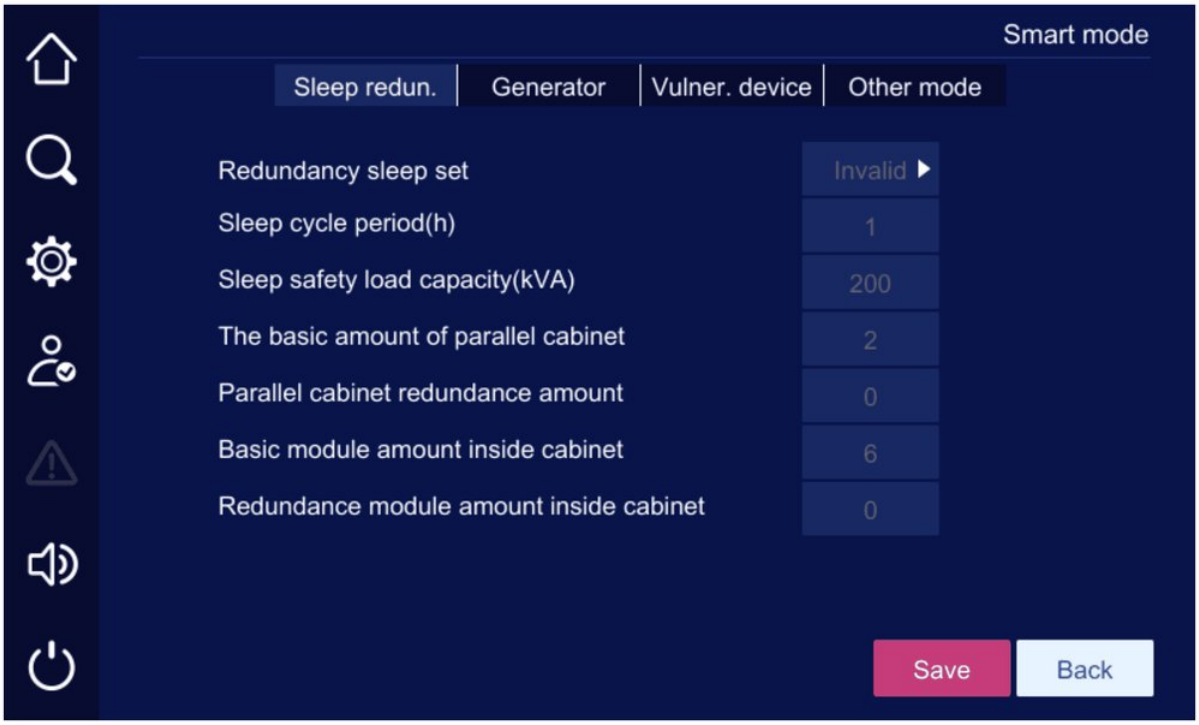

FIGURE 4-24 Smart mode

4.6.5 Dry Contact

In set manage page, click 

icon, it will enter the dry contact page, as shown in Figure 4-25.

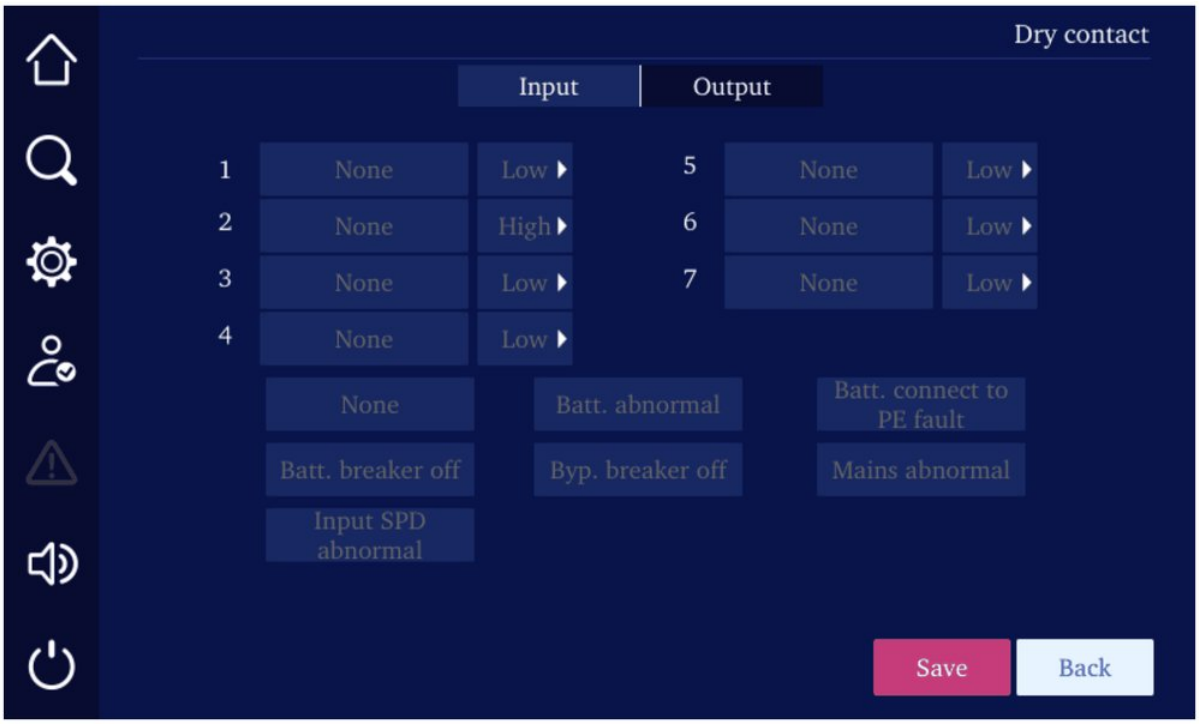

FIGURE 4-25 Dry contact

4.6.6 Battery Test

In set manage page, click 

icon, it will enter the battery test page, as shown in Figure 4-26.

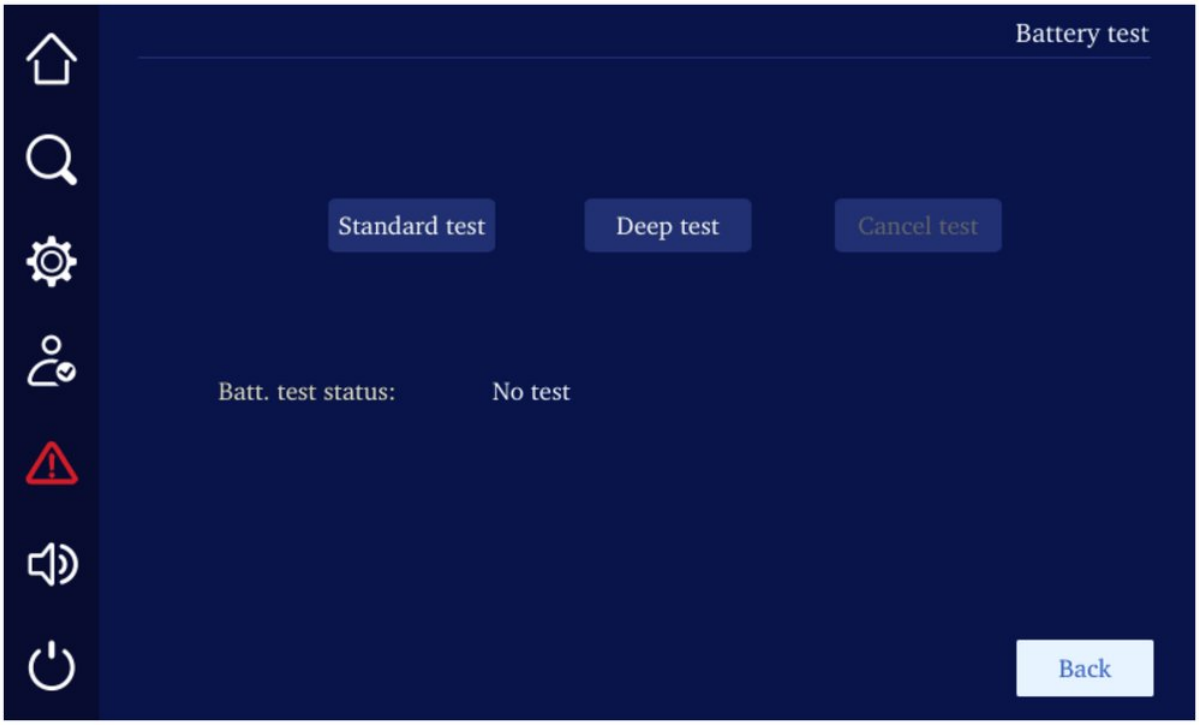

FIGURE 4-26 Battery test

4.6.7 Communication Set

In set manage page, click 

icon, it will enter the communication set page, as shown in Figure 4-27.

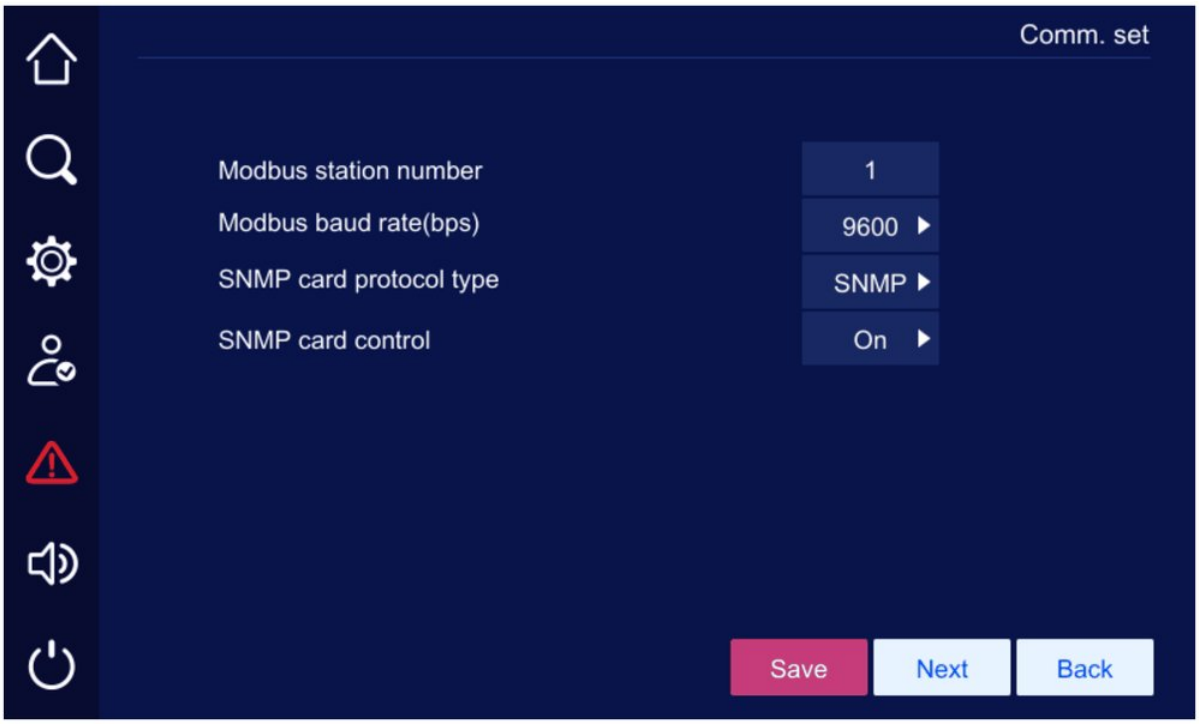

FIGURE 4-27 Communication set

4.6.8 Record Manage

In set manage page, click 

icon, it will enter the record manage page, as shown in Figure 4-28.

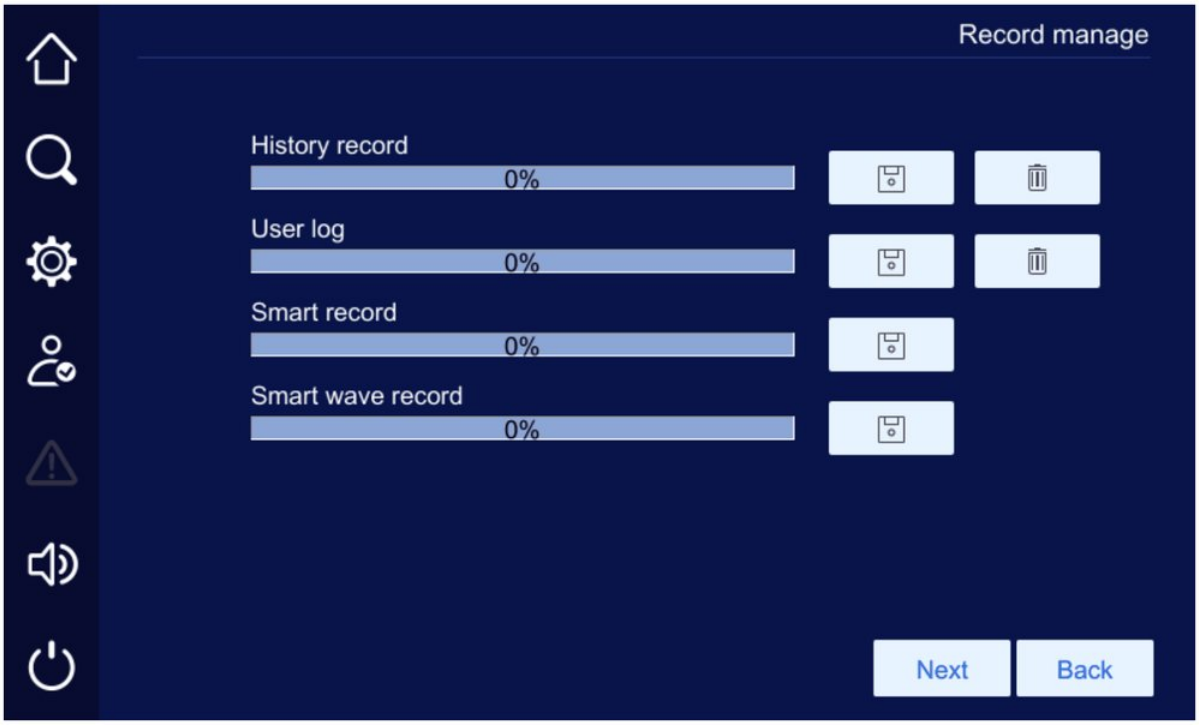

FIGURE 4-28 Record manage

4.6.9 HMI Set



In set manage page, click icon, it will enter the HMI set page, as shown in Figure 4-29.

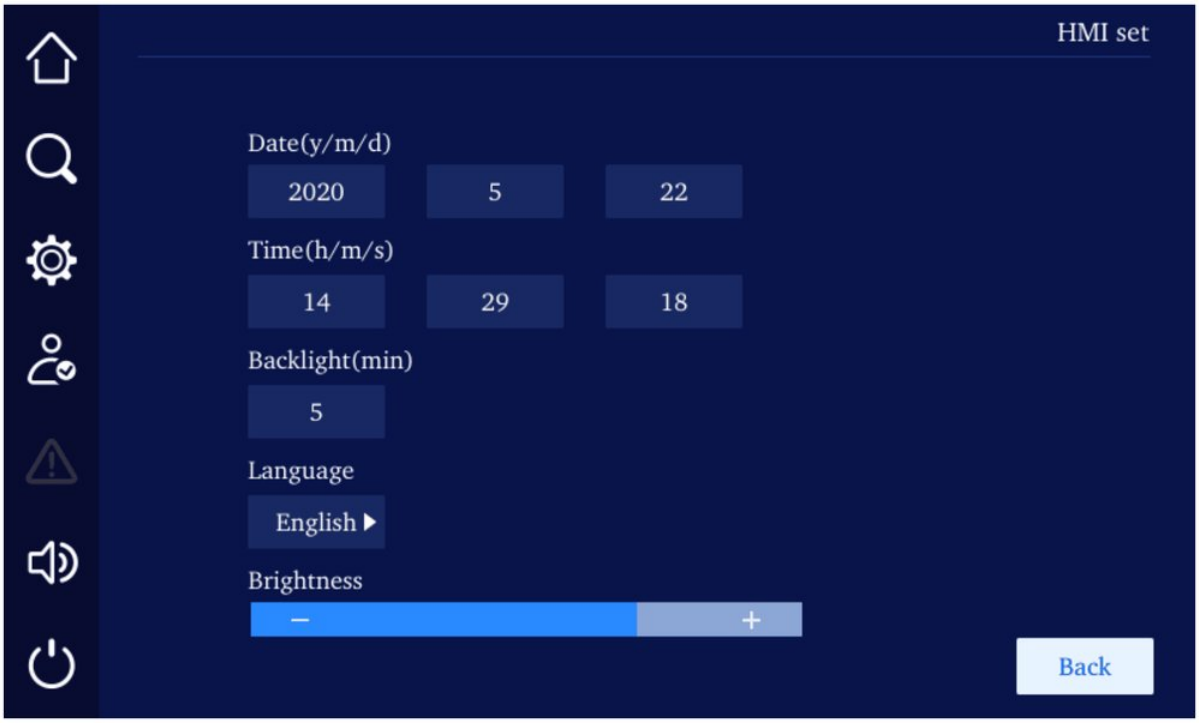

FIGURE 4-29 HMI set

4.6.10 Password Set

In set manage page, click  icon, it will the password set page, as shown in Figure 4-30.

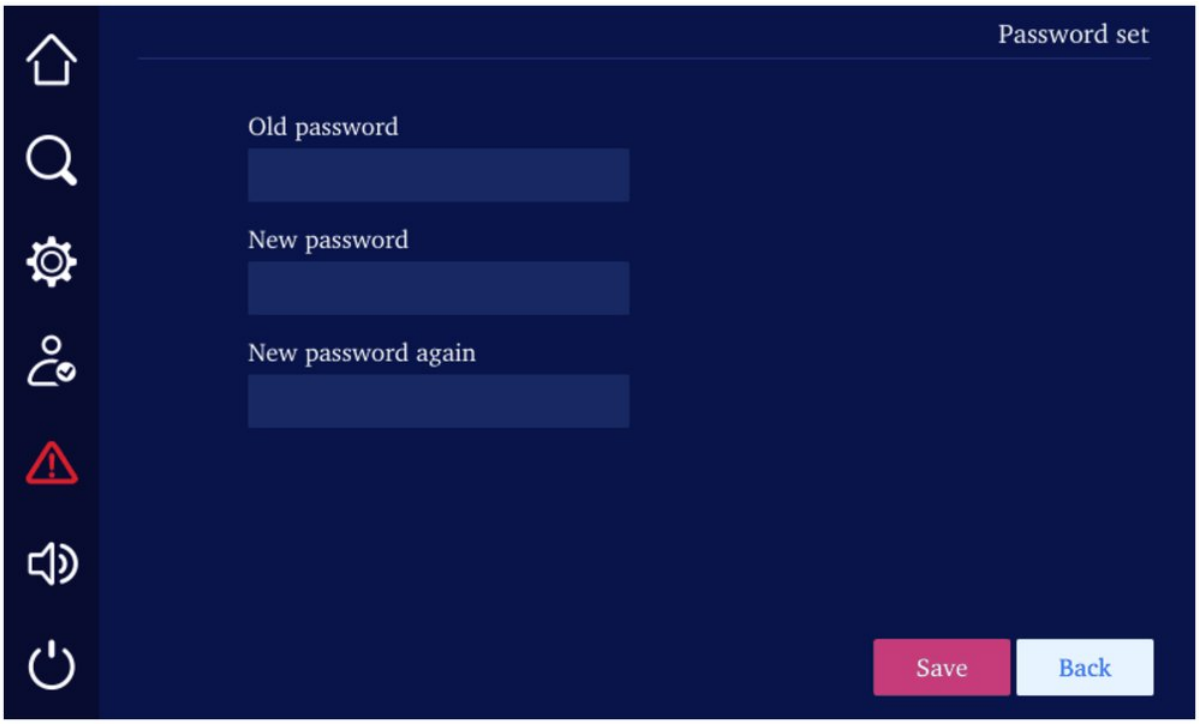

FIGURE 4-30 Password set

> **NOTE**
> The initial user password is 111.

4.7 Information Manage

In main page, click icon, it will enter the information manage page, as shown in Figure 4-31.

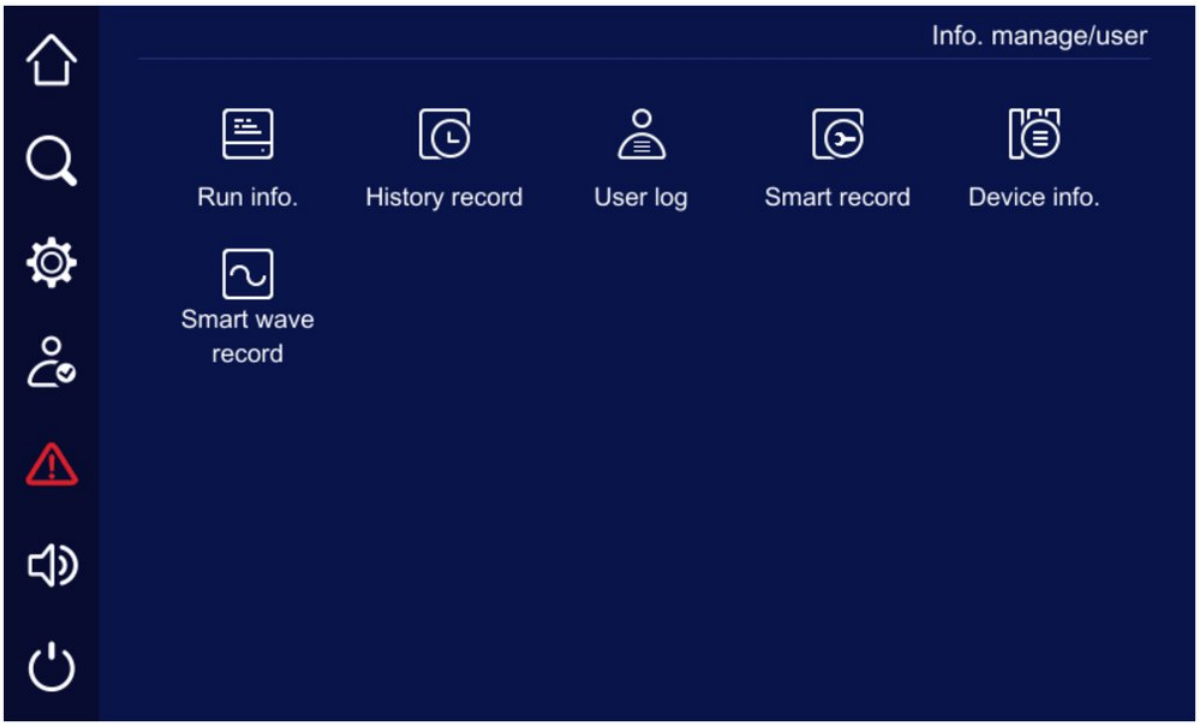

FIGURE 4-31 Information manage

> **CAUTION**
> Up to 10,000 records are stored. When this number is exceeded, the oldest records are overwritten. Records are listed newest first.

4.7.1 Run Information



In information manage page, click icon, it will enter the run information page, as shown in Figure 4-32.

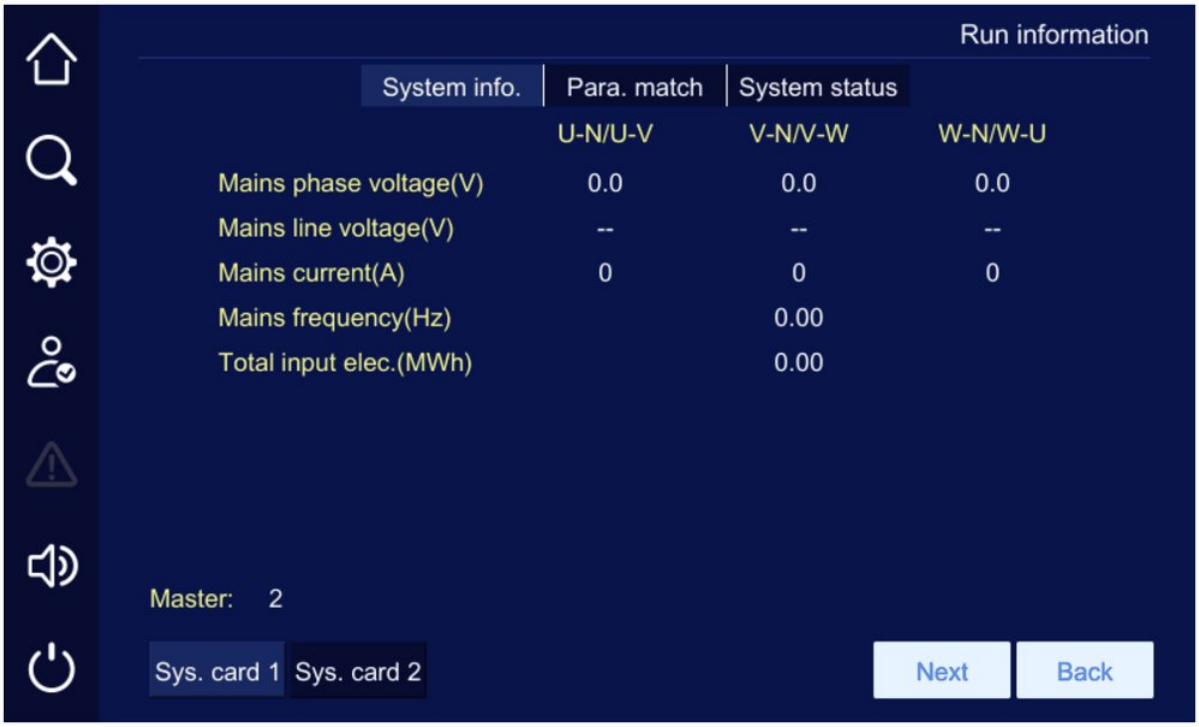

FIGURE 4-32 Run information

4.7.2 History Record

In information manage page, click 

icon, it will enter the history record page, as shown in Figure 4-33. In the page, it shows the history fault and alarm information of system and module.

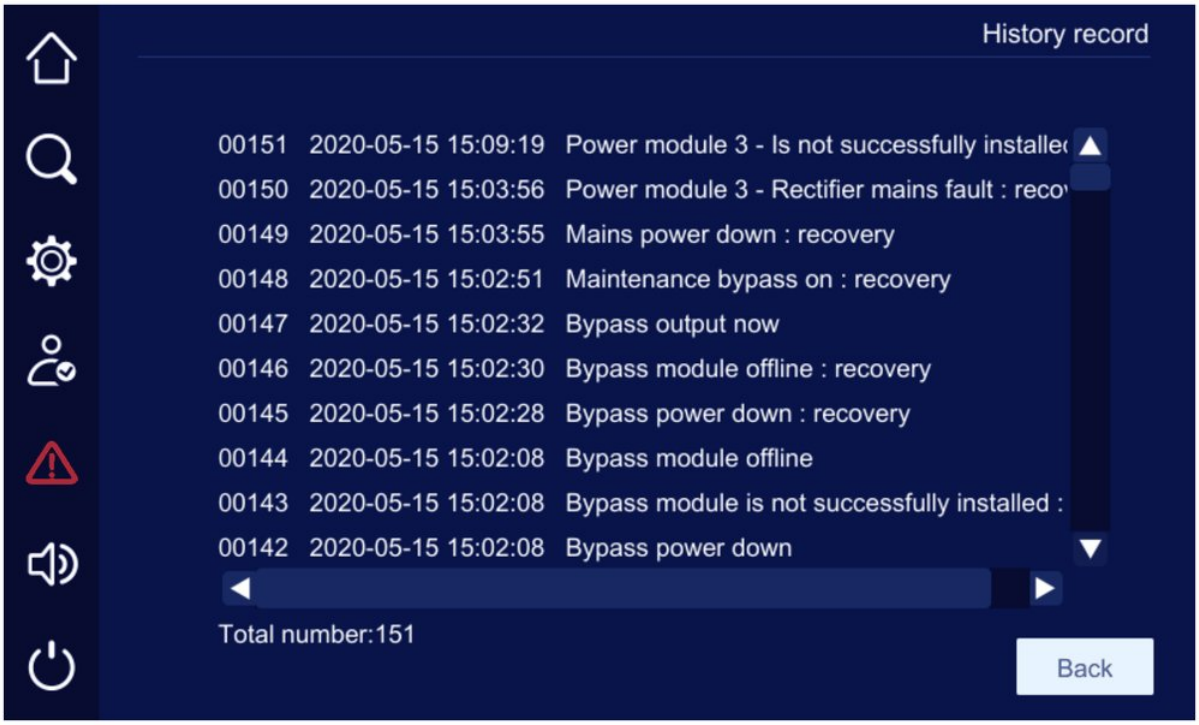

FIGURE 4-33 History record

4.7.3 User Log



In information manage page, click icon, it will enter the user log page, as shown in Figure 4-34. In the page, it shows the user parameter setting record.



FIGURE 4-34 User log

4.7.4 Smart Record

In information manage page, click 

icon, it will enter the smart record page, as shown in Figure 4-35.

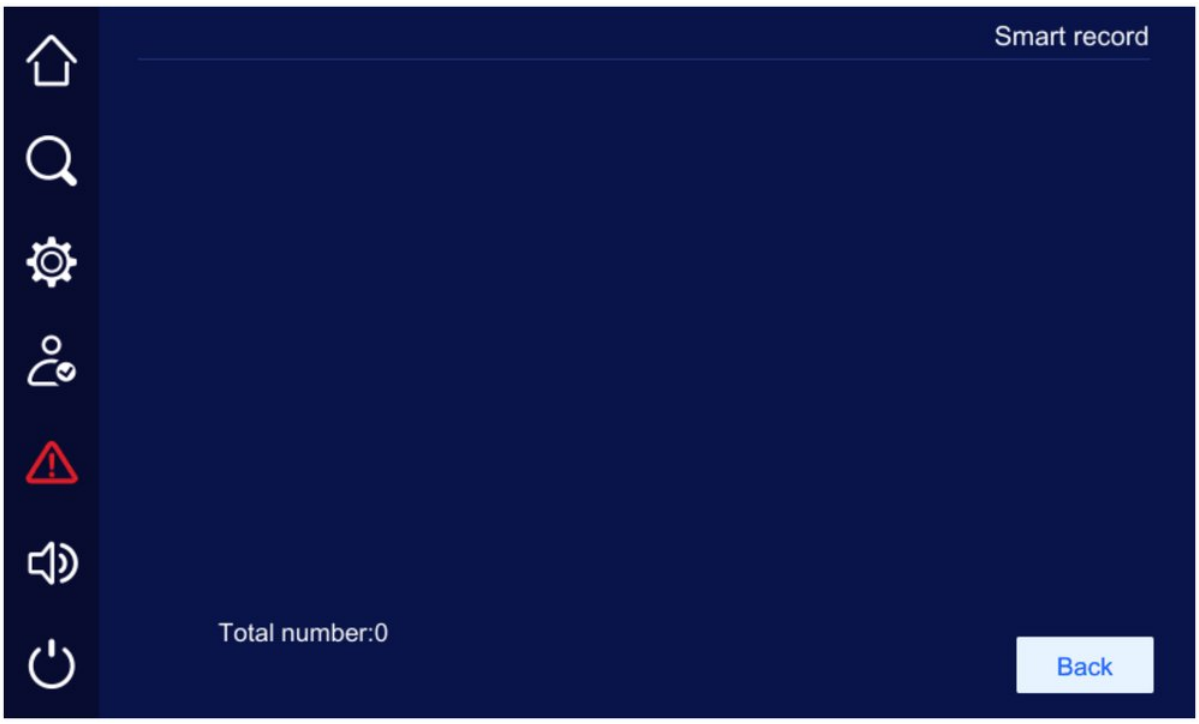

FIGURE 4-35 Smart record

4.7.5 Smart Wave Record

In information manage page, click 

icon, it will enter the smart wave record page, as shown in Figure 4-36.



FIGURE 4-36 Smart wave record

4.7.6 Device Information

In information manage page, click 

icon, it will enter the device information page. In the page, it shows the product name, model, S/N, product version, etc, as shown in Figure 4-37, Figure 4-38, Figure 4-39.

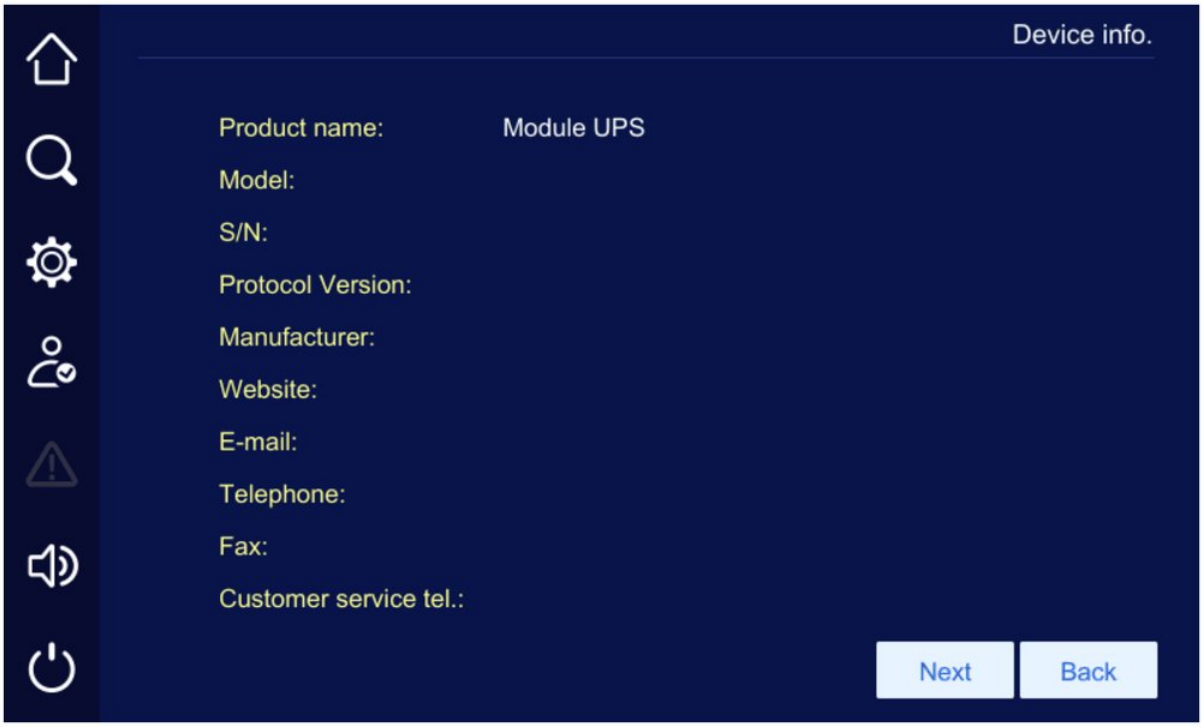

FIGURE 4-37 Product information 1



FIGURE 4-38 Product information 2



FIGURE 4-39 Product information 3

4.8 ON/OFF

In main page, click  icon, it will enter the ON/OFF page. When the system is OFF, click the icon to enter the confirm page, as shown in Figure 4-40. Click **Confirm** button to perform the startup operation.

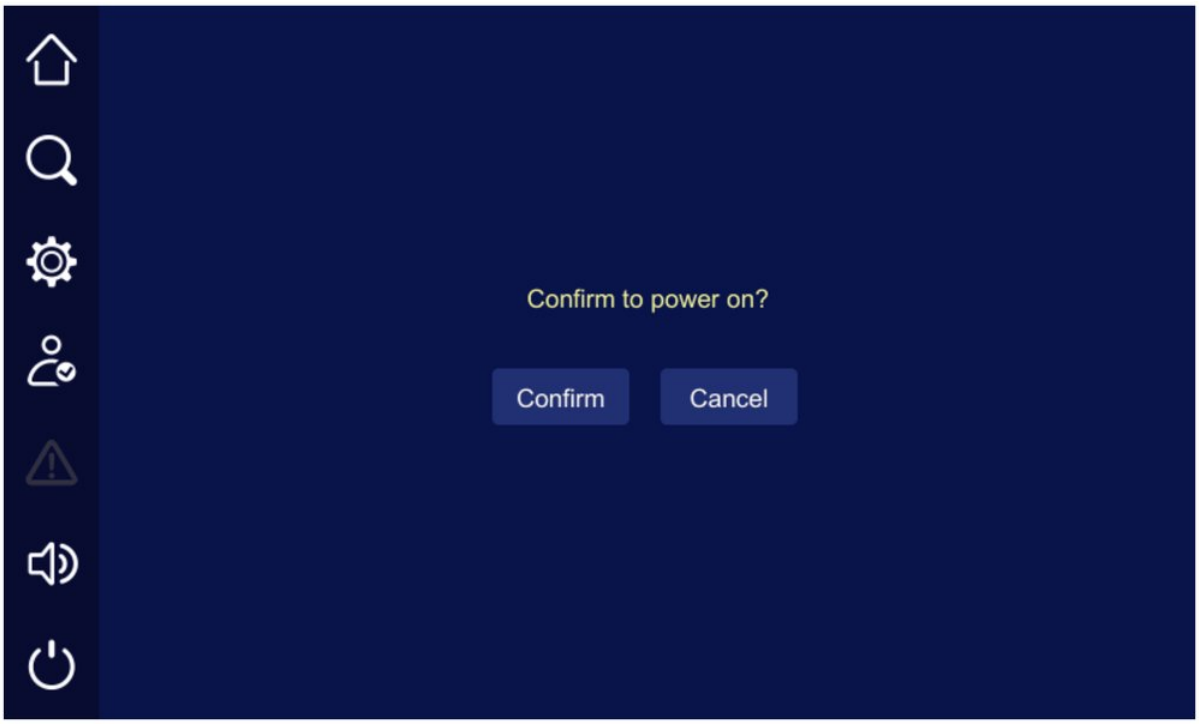

FIGURE 4-40 Power on prompting

CHAPTER 5

05 Use and Operation

This chapter mainly introduces the operation process and method, including use announcements, operation process, UPS ON/OFF operation and parallel system ON/OFF operation, etc.

IN THIS CHAPTER

5.1 Instructions for Use
5.2 Operation Process
5.3 ON/OFF Operation
5.4 Parallel System ON/OFF Operation

5.1 Instructions for Use

- Before starting the UPS, check whether the load is proper. The load must not exceed the rated power of the UPS, which is to avoid overload protection.
- Do not use the <ON> and <OFF> buttons on the panel of UPS as the power switch of load. Do not start the UPS frequently.
- After the UPS works stably, turn on the load. Some devices has large starting current which may cause overload protection, it is better to start these devices first. Start large power device first, then small power device. If you want to turn off UPS, it must turn off load first.
- When mains power outage, if the UPS is power supplied by generator, it is necessary to start the generator firstly. After the generator works stably, the UPS can be connected, or it may cause UPS or load damage. If it needs to close generator, it must close UPS firstly.

5.2 Operation Process

Operation process is as shown in Figure 5-1. If it starts UPS at the first time, it is necessary to do the checking before power-on, see 5.3.1 Check Before Power-on. If all OK, power on UPS. If the UPS isn't used for a long time, it also needs to be checked before power-on.

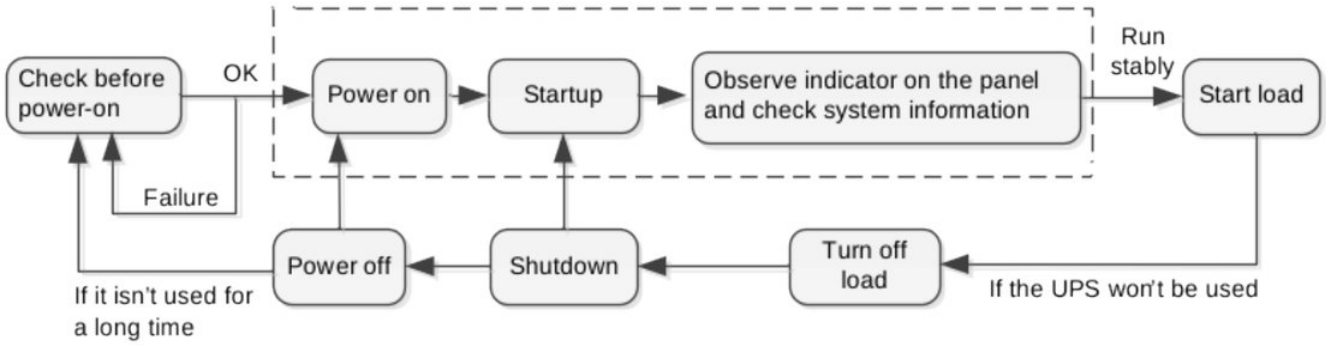

FIGURE 5-1 Operation process

5.3 ON/OFF Operation

5.3.1 Check Before Power-on

Before startup, do the check according to following steps. If all OK, start UPS.

PROCEDURE

1. Ensure that the mains switch(POWER), bypass switch(BYPASS), output switch(OUTPUT), maintenance bypass switch(MAINTENANCE) are all OFF.

2 Check load.

- Ensure that the load is not an inductive load. The UPS output must not be connected to inductive loads, such as motor, fan, air-conditioner, etc. Generally, grid supplies power for these loads.
- Ensure that the load is closed. At the same time, the load capacity should not exceed the rated output capacity of UPS, or, it will cause overload protection.

3 Ensure that there is no short-circuit between the live wire and neutral wire, live wire and grounding wire in the input and output.

4 Measure the AC voltage of mains input terminals, and the voltage should be in the range of 80V~280V, or, it only can use battery to start UPS.

5 Measure the DC voltage of battery input terminals. The voltage of positive battery group should be greater than a certain value (+11.5× battery amount), the voltage of negative battery group should be less than a certain value (-11.5× battery amount), and pay attention to the polarity, avoid wrong battery connection.

6 Ensure that the auxiliary contact of battery switch is connected to a input dry contact of system monitor card, and display the corresponding information on the touch screen.

5.3.2 Start UPS

PROCEDURE

1 Ensure that all the system parameters setting in 5.3.1 Check Before Power-on are right.

2 Switch off the ready switches of bypass module(BM) and all power modules(PM).

3 Switch on the bypass switch → mains switch → external battery switch, it will in bypass power supply mode. (For a battery cold start, only just switch on the external battery switch, and then press the battery cold start button on the bypass module for more than 3s, the system power is set up.)

4 Start the inverter.

- Startup method 1: ON combination button on the panel

When the green indicators of all power modules slowly flicker, press ON combination button on the panel for 3s, the system will turn to the inverter output. View the system running status in the touch screen to check if the system turns to the inverter power supply mode. During test, check if the output voltage and output frequency of UPS are normal through the real-time data in the touch screen.

- Startup method 2: Touch screen

In main page of touch screen, click  icon, it will enter the ON/OFF page, as shown in Figure 5-2, click **Confirm** button to perform the startup operation. After starting the inverter, UPS will turn to the inverter output. View the system running status in the touch screen to check if the system turns to the inverter power supply mode. During test, check if the output voltage and output frequency of UPS are normal through the real-time data in the touch screen.

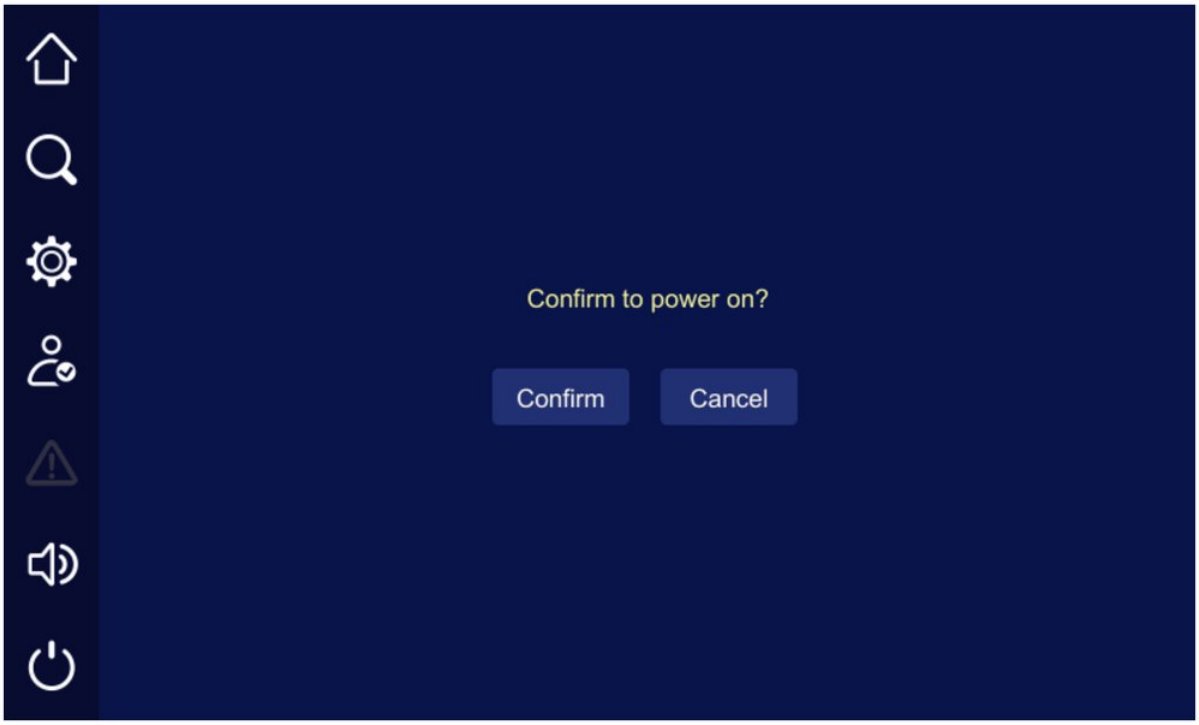

FIGURE 5-2 Power on prompting

5. Switch on the output switch and check with a multimeter that the output voltage and frequency are normal. The UPS is then ready for use.
6. Switch on the load: high-power devices first, then low-power ones.

5.3.3 Shut Down UPS

⚠ CAUTION

If the bypass is normal, after the inverter shutdown, system will turn to the bypass power supply mode. If bypass is abnormal, after the inverter shutdown, system will be with no output. Before performing shutdown operation, please ensure that the load is closed.

PROCEDURE

1. Switch off the load.
2. Shut down the inverter.

- Shutdown method 1: OFF combination button on the panel

Press the OFF button pair on the panel for 3 s: the system transfers from inverter output to bypass output. Check on the touch screen that the system is in bypass mode.

- Shutdown method 2: Touch screen

In main page, click  icon, it will enter the ON/OFF page, as shown in Figure 5-3, click **Confirm** button to perform the shutdown operation.

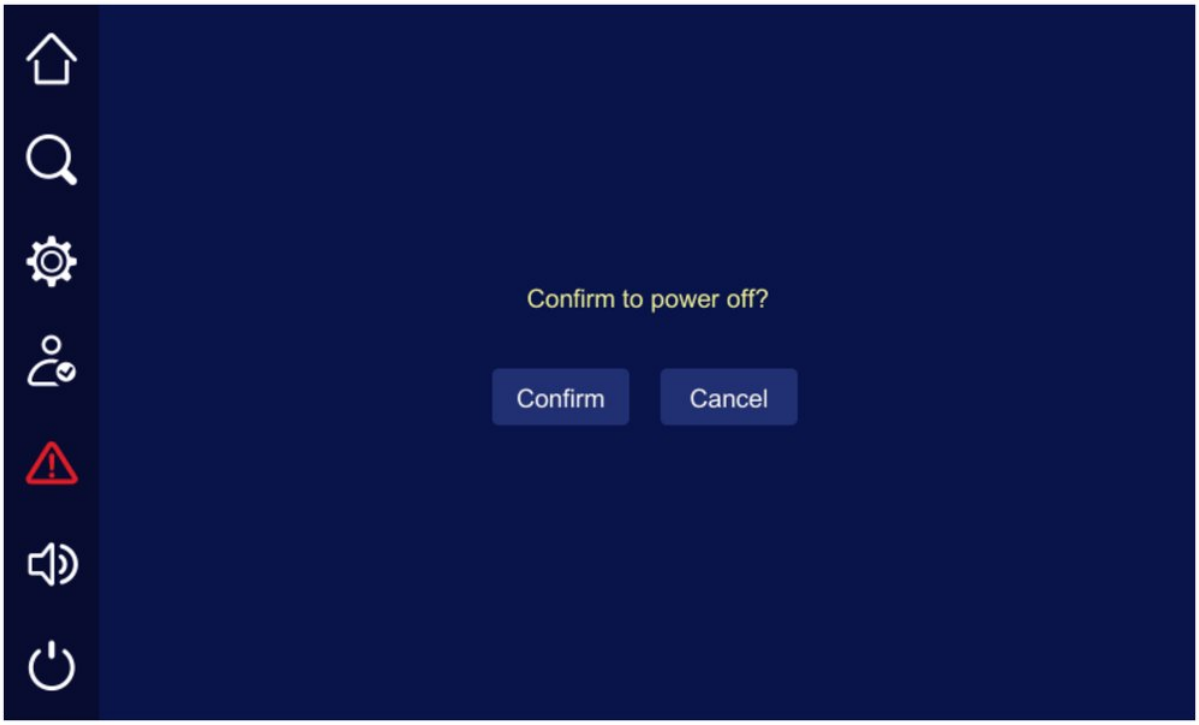

FIGURE 5-3 Power off prompting

3. Switch off the external battery switch → mains switch → bypass switch → output switch.
4. When the touch screen and all LED indicators are off, the UPS is completely shut down.

5.3.4 Switch to Bypass Mode Manually

CAUTION

Before shutting down the inverter, please ensure that the bypass is normal. If bypass is abnormal, after shutting down the inverter manually, the system will be with no output and the power supply for load will be broken off.

Shut down the UPS inverter, please see **Step2** in the 5.3.3 Shut Down UPS, The system will turn to the bypass supply power mode automatically.

NOTE

If the bypass voltage or frequency is outside the set limits, shutting down the inverter leaves the system without output and the load supply is interrupted.

5.3.5 Switch to Maintenance Bypass Mode From Mains Mode

CAUTION

The following operations only can be performed by professionals. Any device damage caused by violating the general safety operation requirements or safety standards of design, production, and usage will be out of guarantee range.

PROCEDURE

1. Shut down the inverter. In main page, click  icon, it will the ON/OFF page, click **Confirm** button to shut down inverter.

NOTE

The inverter also can be shut down by OFF combination button on the panel. Generally, it isn't recommended to operate like this.

2. When the UPS has transferred to bypass and the energy flow on the touch screen shows bypass output, set the maintenance bypass switch to ON.
3. Switch off the mains switch→external battery switch→bypass switch.
4. Switch off the output switch. When the touch screen and all LED indicators are off, maintenance can begin (the maintenance bypass circuit and the terminals remain live).

CAUTION

During maintenance, it is strictly forbidden to switch off the output switch.

5.3.6 Switch to Inverter Mode from Maintenance Bypass Mode

CAUTION

Before perform the operation of switching to inverter mode from maintenance bypass mode, please ensure that the system bypass input is normal.

PROCEDURE

1. Switch on the bypass switch → mains switch → external battery switch → output switch.
2. When the power is normal and the energy flow on the touch screen shows bypass output, set the maintenance bypass switch to OFF. The load is now supplied by the bypass.
3. Start the inverter.

When the green indicator of all power modules slowly flicker, click  icon to enter the ON/OFF page, click **Confirm** button to start inverter. The UPS turns to inverter output.

> **NOTE**
> The inverter also can be started by ON combination button on the panel. Generally, it isn't recommended to operate like this.

5.3.7 Emergency Power Off (EPO)

CAUTION

Don't perform the EPO operation unless emergency.

Press the EPO button on the panel or external EPO button of system, the UPS will turn to emergency power off status. At this time, the touch screen shows EPO protection, and the buzzer long beeps.

CAUTION

- After pressing the EPO button, the UPS will be with no output, the power supply for load is interrupted.
- When the system stays in maintenance bypass mode, after pressing EPO button, the UPS still has output.

5.3.8 Emergency Power Off Recovery

PROCEDURE

1. Ensure that the dry contact of system monitor card, which connected to the external EPO switch, is not in emergency power off status.
2. Switch off the mains switch, output switch and battery switch, and wait for all LED indicators off, the UPS is completely shut down.
3. Switch on the mains switch, bypass switch, battery switch, system will be started again, and EPO removes.

5.4 Parallel System ON/OFF Operation

5.4.1 Start Parallel System

⚠ CAUTION

1. Before starting the parallel system, please perform the 5.3 ON/OFF Operation for each UPS.
2. Before starting the parallel system, please ensure that the wire connection in the output and output and phase sequence is right and the parallel wire is well connected and stay in disconnection status.
3. Do not switch on the load until the parallel system is fully started; keep all load switches off.
4. Before performing the parallel wire operation, please do not connect the parallel wire.

PROCEDURE

1. Measure the front-end voltage and frequency of input switch of all UPSs(including mains switch and bypass switch) or external input distribution switch. Voltage range: 80V-280V, frequency range: 40Hz-70Hz.
2. Connect the parallel wires, switch on the mains switch and bypass switch of all UPSs(keep the output switch of all UPSs on off status). If the input power is normal, the rectifier will start automatically, and the touch screens begin to start.
3. Connect the battery to the parallel system.
4. If the monitor page of each UPS has no alarm, switch on the battery switch of each UPS(If there are many groups of batteries, it needs to switch off the switch of each battery group, and then switch off the total switch between UPS and battery groups). Measure the voltage of battery switch by multimeter (If there are many groups of batteries, measure the voltage of battery switch of each battery group, and then measure the voltage of total switch). Ensure that the battery connection is normal (the “battery circuit abnormal” alarm on the main page of touch screen disappears in 2min).
5. Check if the system alarms are all disappeared. If there is any fault alarm, please stop the startup operation and inform serviceman to solve the problem till all faults are removed.
6. Start the inverter of each UPS. Ensure that each UPS stay in bypass power supply mode and the system has no alarm, start the inverter of each UPS manually, and all UPSs turn to inverter mode.
7. Measure the output voltage and output frequency of each UPS. After each UPS turns to inverter mode(view the system running status in the touch screen to check if the system is in the inverter power supply mode.), check if the output voltage and output frequency of UPS are normal through the real-time data in the touch screen, measure the front-end output voltage of output switch in output distribution cabinet or external output distribution switch to ensure that the inverter output voltage is normal(output voltage = output voltage setting ±2V), and ensure that the inverter output frequency is normal(output frequency = output frequency setting ±0.1Hz). Record the measured output voltage effective value of each UPS).
8. Compare the output voltage of each UPS. After measuring the output voltage and frequency of each UPS, compares the output voltage of each UPS, ensure that the phase voltage effective value difference of any two UPSs is less than 5V, and then the parallel operation can be done. If it does not meet the requirement, the UPS with big voltage difference be connected in parallel system, and it is necessary to debug again.
9. Shut down the inverter of each UPS. Ensure that there is no alarm of each UPS, shut down each UPS manually. All UPSs turn to the bypass power supply mode.
10. Check the phase sequence of bypass.

Switch on the output switch of UPS1(Ensure that the total switch of load is switched off, or once switching on the output switch of UPS1, it will supply power for load), keep output switches of other UPSs off, set the multimeter to AC position, one pen connects with the output switch front-end phase-U of UPS2 and the other pen connects with the output switch back- end phase-U of UPS2 to measure the voltage difference between the front-end and back-end of output switch of UPS2. Measure the voltage difference of phase-V and phase-W as the same way. If the phase sequence is right, the voltage difference of each phase should be less than 5V. If the phase sequence is not right, at least one phase voltage difference is greater than 5V. Measure whether the bypass sequence of each paralleled UPS is right(When measuring the other UPSs' phase sequence, it doesn't need to operate the switch. Keep the output switch of UPS1 on and the output switches of other UPSs off). If all bypass phase sequence of all UPSs is right, go on next step. If the phase sequence of any UPS is not right, power off the system and check the input and output wiring of each UPS and see if the connection is right.

11 Switch on the output switches of all UPSs.

With no alarm on any UPS, switch on the output switches of all UPSs one after the other. Check that the outputs of all UPSs are in parallel.

12 Start the inverter of each UPS.

Ensure that the system is with no alarm, manually start the inverter of each UPS successively. System starts inverter output. Monitor that there is no alarm.

13 Shut down the inverter of each UPS.

Ensure that each UPS is with no alarm, shut down the inverters of all UPSs, the system turns to the bypass power supply mode.

14 Switch on the total output switch of load.

After the parallel system turns to the bypass power supply mode, switch on the total output switch of load, bypass supplies power for load.

15 Start each UPS successively, the system will turn to the inverter power supply mode.

5.4.2 Shut Down Parallel System

⚠ CAUTION

If the bypass is normal, after the inverter shutdown, system will turn to the bypass power supply mode. If bypass is abnormal, after the inverter shutdown, system will be with no output. Before performing shutdown operation, please ensure that the load is closed.

PROCEDURE

1 Shut down all loads in the parallel system, keep the UPS running without load for a while for heat dissipation.

2 Perform 5.3.3 Shut Down UPS to shut down all UPSs, system turns to the bypass power supply mode.

3 Switch off the total load switch, output switch (OUTPUT), battery switch, bypass switch (BYPASS) and mains switch (POWER) of each UPS successively.

ⓘ NOTE

If it just needs to shut down the inverter of the UPS, system turns to the bypass power supply mode and the load without power outage, just perform Step 2. If it needs to shut down all UPS system, perform all above steps.

5.4.3 Emergency Power Off(EPO)

SINGLE UPS RUNNING

Press the EPO button of the UPS or the EPO button of total system, the UPS will be shut down and close all outputs.

MULTI UPSS RUNNING IN PARALLEL

- EPO linkage is enabled.

Press the EPO button of any UPS or the EPO button of total system, all the paralleled UPSs will be shut down and close all outputs.

- EPO linkage is disabled.

Pressing the EPO button of one UPS switches off the output of that UPS only.

Press the EPO button of total system, all paralleled UPSs will be shut down and all output will be closed.

CHAPTER 6

06 Maintenance and Troubleshooting

This chapter mainly introduces the maintenance guide, battery maintenance, battery replacement announcements and troubleshooting, etc.

IN THIS CHAPTER

6.1 Maintenance Guide
6.2 Battery Maintenance
6.3 Battery Replacement Safety
6.4 Troubleshooting

6.1 Maintenance Guide

Proper maintenance is the key to make the device operate in best status and with a longer service life.

6.1.1 Safety Precautions

To ensure personal safety and protect the device, observe the following precautions.

- Please keep in mind that there is dangerous voltage inside the UPS even if the UPS does not operate. Before maintenance, use a multimeter to check the voltage and make sure that the UPS is completely shut down and stays in safe status.
- Before switching off the battery switch at any time, use a multimeter to measure if the voltage of wiring terminal is normal and the polarity is reverse connected. If the result is abnormal, it is strictly forbidden to close the battery switch.
- Do not wear conductive metal objects such as rings or watches while working.
- Observe the safety regulations strictly. If in doubt, consult qualified personnel.

6.1.2 Preventive Maintenance

To improve the reliability and efficacy of the UPS, perform the following maintenance tasks on a quarterly basis.

- Keep the operating environment free from dust and chemical pollutants.
- Check if the terminals in the input and output are in good contact every half year.
- Check the working status of fans periodically and avoid sundries blocking the air vents. If a fan is damaged, maintain or replace it in time.
- Check the voltage of battery group periodically, ensure that the battery voltage is within the normal range.
- Check the UPS status regularly so that any fault is detected in time.

6.2 Battery Maintenance

- Battery charge requirements
  - When using the battery at the first time, please start the UPS and charge the battery for 24h. During charging, the UPS still can be used, but if power outage occurs at the same time, the battery discharge time may be less than the standard vale this time.
  - Generally, the battery needs to be charged and discharged every 4 to 6 months. First, discharge till 1/3 of battery capacity and then charge the battery. The charge time of each time cannot be less than 24h.
  - In high temperature area, the battery needs to be charged and discharged every 2 months and the charge time of each time cannot be less than 24h.
  - If the battery will not be used for a long time, it also needs to charge the battery every 3 months and the charge time of each time cannot be less than 24h.
- Clean battery shells by cloth. Oil and organic solvents, such as petrol and diluents are prohibited.
- Keep batteries far away from fire sources and devices that easily generate sparks to avoid explosion.
- Avoid over-discharge the battery during using. Fully charge the battery immediately after discharge(24h at most) and then the battery can discharge again. It is strictly forbidden to discharge the not fully charged battery, or, it will cause battery capacity decrease even battery damage.
- To avoid battery discharging for too much time after mains power outage, switch off the battery switch when the UPS is not used.

6.3 Battery Replacement Safety

- Do not put the battery into fire to avoid explosion.
- Do not open or disassemble the battery: the electrolyte is harmful to skin and eyes.
- Recycle the batteries according to the instructions on the battery and local regulations.
- Replace the complete battery string; do not mix new and old batteries.
- New batteries must have the same capacity and type, and come from the same manufacturer, as the replaced ones. Never mix batteries of different capacity, type or manufacturer.
- Dangerous voltage can be present between the battery terminals and earth: measure before touching. Never touch the two battery terminals or bare cable ends of the battery.

6.4 Troubleshooting

6.4.1 Common Abnormal Phenomena Diagnosis

If the UPS works abnormally after startup, please refer to Table 6-1 to find possible reason. Meanwhile, check if the fault is caused by external environment, such as temperature, humidity is not accordance with the requirement or overload.

Table 6-1 only includes some simple diagnosis. If the diagnosis is not clear, or not sufficient to solve the problem, please contact with local agency or dealer to deal with.

TABLE 6-1 Troubleshooting

NO.	Abnormal phenomenon	Possible reason
1	Mains is normal, but UPS works in battery inverter status, the buzzer beeps intermittently.	Each connection point, socket of grid circuit is poor contact, which causes the AC power supply input blocked.
2	After installation, switch on switches or power switch, the fuse will fuse or trip off.	The three-phase input wires are wrongly connected, such as neutral wire and grounding wire or live wire and grounding wire (case) is wrongly connected or the three-phase output wires are wrongly connected.
3	After startup, the UPS outputs 230V AC power, but the UPS works in bypass status.	1. The load is too large, which exceeds the rated output capacity of the UPS. It needs to reduce load or select a UPS with larger output capacity. 2. A temporary transfer to bypass caused by load inrush, with automatic return to inverter, is normal.
4	The UPS output normally after startup, but once start load, the UPS stops outputting immediately.	1. The UPS is serious overload or the output circuit is short- circuit. It is necessary to reduce load to proper capacity or find the reason of short-circuit. Common reason is the output socket is short-circuit or input short-circuit caused by device damage. 2. The load is not started according to the sequence from large power device to small power device. You should restart the UPS. After the UPS runs stably, start the load according to the sequence from large power device to small power device.
5	The UPS works normally after startup, but some time later, the UPS shuts down automatically.	In the battery supply power mode, the battery is runs out and system takes the battery under-voltage protection, the UPS shuts down automatically. This phenomenon is normal. Once mains is normal, system will start and charge battery automatically. Warning: If the battery stays in under-voltage status for a long time, it will influence the battery service life. After taking battery under-voltage protection, if mains cannot recover for a long time, please switch off the battery switch to protect battery and restart the UPS and fully charge the battery once mains recovers.
6	The UPS works normally after startup for a long time, buzzer long beeps and the touch screen shows battery low-voltage.	The grid voltage is too low, and the UPS works in battery inverting status, finally, the battery is under-voltage and takes the under- voltage protection.
7	When there is mains, the UPS outputs normally. When there is no mains, the UPS is with no output.	1. Battery fault, or the battery string is badly damaged. 2. Charger fault: the battery is not charged and its energy is insufficient. 3. Battery wire is not well connected or the contact of wire terminal is poor. 4. Battery switch is not switched off. 5. After serious overload, the UPS is not restarted, which causes that the UPS is in bypass output status.
8	Buzzer long beeps, the UPS turns to bypass supply power mode.	See the fault information on touch screen.
9	Mains is present, but the buzzer beeps intermittently.	The mains voltage or frequency exceeds the allowable range of the UPS.
10	On mains the UPS works normally; during a power failure the UPS also works normally, but the load equipment stops.	The earthing is poor and the floating voltage between neutral wire and grounding wire is too high.
11	FAULT indicator of a power module is on.	The power module is fault, replace it in time.

6.4.2 Emergency Handling of System Faults

- How to deal with the system fault in emergency

When system fault, shut down the power of UPS by the touch screen, if necessary, shut down the user load and switch off the input and output switch of the UPS to avoid further UPS damage. Inform the engineering technicist to maintain.

- How to deal with the fault of single power module in emergency

When one power module fault, it will be insulated with system automatically. Generally, it will not influence the system normal operation, but it will decrease the redundancy degree of the module. At this time, please shut down the fault module and pull it out of the cabinet, and then inform the engineering technicist to maintain.

After pulling out the module, there still has high voltage inside the module and on the rear connector pin. It is necessary to wait enough time (≥10min) and then open the cover to maintain.

CHAPTER 7

07 Package, Transportation and Storage

This chapter describes packaging, transport and storage of the UPS.

IN THIS CHAPTER

7.1 Package
7.2 Transportation
7.3 Storage

7.1 Package

During packing, please pay attention to the place direction requirements. At the side of the package, there is afraid of wet, handle with care, upward, stack layer limit, etc. alarm marks. And also, the device model is printed on the package. At front of the package, the LOGO of Company and device name is printed.

7.2 Transportation

During transporting, pay attention to the warning marks and avoid severe impact on the device. Place the device according to the marked direction, which is to avoid damage the component. Any inflammable, explosive, corrosive object is not allowed to shipping with the device. While midway transportation, do not put the device in the open air. The device cannot suffer any rain, snow or liquid material or mechanical damage.

7.3 Storage

When storing the device, place the device according to the marked direction. The package box should be far away from ground for 200mm, and keep at least 500mm from wall, heat source, cold source, window or air inlet.

Storage temperature: -25~55 °C(Exclude battery). If the device is transported or stored out of the storage temperature, before installation and startup, put the device aside and let the device temperature recover to normal range for more than 4h. In the warehouse, any inflammable, explosive, corrosive object or harmful gas is not allowed, and also, strong mechanical shake, impact or magnetic field is forbidden. The storage period of these requirements, generally, is 6 months. If the device stored more than 6 months, it is necessary to check again. If the device is stored for a long time, please charge the battery every 3 months.

APPENDIX A

A Technical Specifications

Index ⌄	Model ›	IST6-120
Input	Input mode	3φ4W+PE
	Rated input voltage(VAC)	220/230/240(phase voltage)
	Input voltage range	Vin=176Vac~280Vac, it does not need to decrease rated power to use. Vin=80Vac~186Vac, for linear load, it is necessary to decrease rated power to use.
	Input frequency range (Hz)	40~70
	Bypass sync tracking range (Hz)	50/60±6
	Bypass input voltage(VAC)	220/230/240(phase voltage)
	Input power factor	≥0.99
	Input THDi	Resistive load:≤2%; non-linear full load:≤3%
	Battery voltage (VDC)	+168~+276(It can be selected in the range of +14 pieces to +23 pieces, the default is +16 pieces.) If the battery amount is less than<+16 pieces, it's is necessary to decrease rated power to use, and decrease the output load capacity to 80%.
	Charge current (A)	Power module amount*10A(Max)
Output	Output mode	3φ4W+PE
	Output waveform	Sine-wave
	Voltage(VAC)	L-N: 220/230/240 L—L: 380/400/415
	Frequency (Hz)	When mains is normal, it tracks the bypass input frequency; When mains is abnormal, it tracks the frequency 50±0.2% or 60±0.2% of the UPS.
	Three-phase phase error	With balance load≤1°
	Wave form distortion(THDv)	Linear load≤1%; non-linear load≤4%
	Bypass inverter switching time (ms)	Sync 0; Async<15
	System efficiency	95%

Index ⌄	Model ›	IST6-120
	Overload capacity	**Inverter overload capacity:** • Linear load(PF=1.0) For less than 105% load, it runs for long-term; For 106%~110% load, it turns to bypass after 60min; For 111%~125% load, it turns to bypass after 10min; For 126%~150% load, it turns to bypass after 1min; For greater than 151% load, it turns to bypass immediately. • Non-linear load(PF=0.9) For less than 105% load, it runs for long-term; For 106%~110% load, it turns to bypass after 60min; For greater than 110% load, it turns to bypass immediately. • Non-linear load(PF=0.8) For less than 105% load, it runs for long-term; For greater than 105% load, it turns to bypass immediately.
		Bypass overload capacity: For less than 130% load, it runs for long-term; For 131%~150% load, it turns to bypass after 5min; For 151%~200% load, it turns to bypass after 1s; For 201%~300% load, it turns to bypass after 100ms; For greater than 300% load, protect immediately.
	Dynamic response transient range	The load changes in the range of 0%~100% or 100%~0%, its output voltage is less than 5%.
	Load unbalance capacity	It can bear 100% unbalance load
	Manual maintenance bypass	Equipped with the maintenance bypass switch with no switching time.
Others	DC startup function	Equipped
	Touch screen display	Three-phase input voltage, input frequency, three-phase output voltage, load, battery voltage, battery charge/discharge current, output current of each module and inner temperature, parameter setting, history record, etc.
	LED display	Display the working status and fault of UPS
	Alarm function	Input abnormal, battery low-voltage, overload, fault.
	Communication function	1. RS232 2. Build-in SNMP communication 3. Modbus communication 4. Dry contact communication
	Battery monitoring function(optional)	BMS battery monitoring manage system monitors the cell working status in real-time.
	Protection function	Output short-circuit protection, output over-voltage/ under-voltage protection, overload protection, over-temperature protection, battery under-voltage protection, etc.
	EMC	Meets IEC 62040-2
	Cooling way	Forced air cooling
	Wiring method	Bottom wiring in default. It's compatible with top wiring(select the top wiring accessory).

- Specifications are subject to change without prior notice.

Dimensions and weights

Overall dimensions in millimetres (W × D × H) and net weights, from the technical data of this manual. Leave the clearances given in the installation chapter around the UPS.

IST6-30 ... IST6-120
cabinet, with the power modules and bypass module



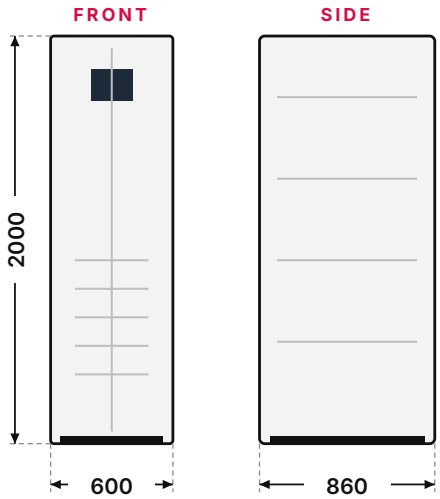

W × D × H	600 × 860 × 2000 mm
Cabinet without modules	180 kg
Power module (each)	24 kg
Bypass module	17 kg

APPENDIX B

B Physical Characters

Item ⌄ Model ›	IST6-120
Wiring method	Top wiring / bottom wiring(in default)
Weight (kg)	Cabinet without module:180 Power module:24 Bypass module:17
Size(W×H×D)(mm)	600×2000×860
Noise (dB)	<65
Protection grade	IP20
Communication function	Dry contact, RS232, RS485, MODBUS, SNMP(optional)
Operating temperature (°C)	-5~40
Storage temperature (°C)	-25~55
Relative humidity	0%~95% RH(with no condensation)

APPENDIX C

C Acronyms and Abbreviations

Acronym	Meaning
AC	Alternating Current
BMS	Battery Management System
DC	Direct Current
DSP	Digital Signal Processor
ECO	Economy mode
EMC	Electromagnetic Compatibility
EPO	Emergency Power Off
ESD	Electrostatic Discharge
HMI	Human-Machine Interface
IEC	International Electrotechnical
LED	Light-emitting Diode
NC	Normally Closed (contact)
PE	Protective Earth
PF	Power Factor
PFC	Power Factor Correction
RCD	Residual-Current Device
RS232	Recommended Standard 232
RS485	Recommended Standard 485
SCR	Silicon-Controlled Rectifier
SNMP	Simple Network Management Protocol
SPD	Surge Protective Device
THDi	Total Distortion of the input current
THDv	Total Harmonic Distortion of output
UPS	Uninterruptible Power Supply

More on the AEC partner portal

PARTNER PORTAL

portal.emea.aecups.com

- 3D models of every UPS
- Diagrams and drawings
- Video tutorials
- Manuals and catalogues, always up to date

WHATSAPP SUPPORT

+39 393 080 5211

Technical support 24/7. Scan the code to write to AEC service.

AEC International Srl
Via Nerviano 55 · 20045 Lainate (MI) · Italy

Sales +39 02 9415 8991 · info@aecups.com
Service +39 393 080 5211 · service@aecups.com