AEC
Technology Behind Power

USER MANUAL

IST6

600–1200 kVA

Modular online double-conversion UPS, three-phase



English

Read this manual before installing and using the UPS.
Keep it for future reference.

AEC-UM-IST6-600-1200-EN
Rev. 01 · 11/2026

OVERVIEW

Contents

About this manual 4

1 Safety Description 5

1.1 General Description 5
1.2 Personal Safety 6
1.3 Device Safety 7
1.4 Mechanical Safety 9
1.5 Electrical Safety 12
1.6 Operation Safety 14
1.7 Maintenance Safety 14
1.8 Transportation Requirements 14
1.9 Storage Requirements 15

2 Overview 16

2.1 Product Intro 16
2.2 Appearance 21
2.3 Structure Layout 24
2.4 Components Description 26
2.5 Working Principles and Modes 35
2.6 Optional Components 39
2.7 Alarm Protection Function 49

3 Installation 60

3.1 Installation Process 60
3.2 Unpacking and Checking 61
3.3 Installation Preparation 62
3.4 Transportation 69
3.5 UPS Installation 70
3.6 Optional Components Installation 74
3.7 Electrical Connection 87
3.8 Check the Installation 111

4 Operation Guide 112

4.1 Single UPS Operation 112
4.2 Parallel System Operation 116
4.3 BSC System Operation 120

5 Touch Screen Operation 121

5.1 Menu Hierarchy 121
5.2 Home Page 123
5.3 System Working Status 125
5.4 Buzzer Control 130

5.5 Home Page 131
5.6 Info Manage 134
5.7 Setting Manage 139
5.8 Inverter ON/OFF 148

6 Maintenance and Troubleshooting 149
6.1 Manual Maintenance Operation 149
6.2 Replace Power Module 151
6.3 Maintenance Guide 153
6.4 Battery Test 160
6.5 Troubleshooting 163

7 Removing and Discarding UPS 165
7.1 Removing UPS 165
7.2 Discarding UPS 165

A Technical Specifications 166
A.1 UPS Technical Specifications 166
A.2 Component Technical Specifications 169
Dimensions and weights 170

B Quality Assurance 172

C Acronyms and Abbreviations 173

BEFORE YOU START

About this manual

This manual describes the AEC IST6 600–1200 kVA UPS: modular online double-conversion UPS, three-phase. It covers the features, controls, installation, operation, maintenance, transport and storage. Read it before you start, and keep it with the UPS for future reference.



IST6-600



IST6-800 + distribution



IST6-1000 / 1200 + distribution

97.2 % maximum efficiency, online mode	**100 kW** 3U hot-swappable power modules
≤ 3 % input THDi at full load	**0 ms** mains ↔ battery transfer

MODELS COVERED

- IST6-600: 800 mm cabinet, up to 6 power modules of 100 kW (IST6-PM100); bypass module IST6-BM600
- IST6-800: 800 mm cabinet, up to 8 power modules of 100 kW; bypass module IST6-BM800; with the distribution cabinet IST6-DIST800, 1400 mm
- IST6-1000 and IST6-1200: 1200 mm cabinet, up to 10 and 12 power modules of 100 kW; bypass module IST6-BM1200; with the distribution cabinet IST6-DIST1200, 1800 mm

WHO THIS MANUAL IS FOR

Installers, electricians, IT and facility staff who install, operate and maintain the UPS. Electrical installation and any work inside the UPS must be done by qualified personnel, in line with IEC 60364 and the local wiring rules.

Product standard: IEC 62040

Safety messages

Safety messages in this manual follow ISO 3864 / ANSI Z535. The signal word tells how serious the hazard is.

⚠ DANGER	A hazardous situation which, if not avoided, **will** result in death or serious injury.
⚠ WARNING	A hazardous situation which, if not avoided, **could** result in death or serious injury.
⚠ CAUTION	A hazardous situation which, if not avoided, could result in minor or moderate injury, or in damage to the equipment.
NOTE	Additional information that stresses or completes the text.
TIP	A hint that helps you solve a problem or save time.

Numbers in red circles on a picture are explained in the table or list that follows it. References in red, such as Figure 2-1 or Table 3-1, are links in the PDF. Figures are for reference only: the actual product may differ in detail.

Up and running

The short version: each step points to the full instructions. Read the safety chapter first.

1. **Read the safety instructions.** See Section 1.2, Personal Safety.
2. **Unpack and check the delivery.** See Section 3.2, Unpacking and Checking.
3. **Choose the place and prepare the cables and breakers.** See Section 3.3, Installation Preparation.
4. **Install and connect the UPS.** See Section 2.6.9, Side Wiring Cabinet.
5. **Start the UPS.** See Section 4.1.2, Startup.
6. **Check the display and the settings.** See Section 5.7, Setting Manage.
7. **Look after the UPS.** See Section 6.1, Manual Maintenance Operation.

01 CHAPTER 1 Safety Description

IN THIS CHAPTER

1.1 General Description
1.2 Personal Safety
1.3 Device Safety
1.4 Mechanical Safety
1.5 Electrical Safety
1.6 Operation Safety
1.7 Maintenance Safety
1.8 Transportation Requirements
1.9 Storage Requirements

AT A GLANCE **The safety rules of this chapter**



High voltage inside, also after the UPS is switched off: wait before opening it.



Installation, opening and service by qualified personnel only.



Batteries: never short-circuit them, keep them from fire, use only the specified type.



Electrostatic-sensitive boards: wear an earthed wrist strap.



Earth the UPS before connecting anything else.



No liquids or foreign objects inside the UPS.



In case of fire use a dry-powder extinguisher, never water or liquid.



Keep the air inlets and outlets free; respect the clearances.

1.1 General Description

⚠ CAUTION

- Before operating the equipment, please read the safety notices and operating instructions in this manual carefully to avoid accident.
- Comply with local laws and regulations when installing, operating and maintaining the device. The alerts in the user manual, such as "DANGER", "WARNING" and "CAUTION", do not include all safety instructions. They are only the supplement of local laws and regulations.

NOTE

AEC accepts no liability for malfunctions, component damage, personal injury or property damage caused by violating the general safety requirements or the safety standards for the design, production and use of the device; such damage is not covered by the warranty.

AEC is not liable in any of the following circumstances:

- Device damage resulting from force majeure events, including but not limited to earthquakes, floods, volcanic eruptions, mudslides, lightning, fires, wars, armed conflicts, typhoons, hurricanes, tornadoes, extreme weather, or other natural disasters.
- Operation of the equipment outside the usage conditions specified in this manual.

- Installation or usage environments that do not comply with applicable international, national, or regional standards.
- Installation or operation by unqualified personnel.
- Failure to follow the operational instructions and safety warnings provided in the product and the manual.
- Unauthorized disassembly, modification of the product, or alteration of its software code or firmware.
- Damage incurred during transportation arranged by the customer.
- Damage resulting from storage conditions that do not conform to the requirements outlined in this manual.
- Use of materials or tools supplied by the customer that fail to meet applicable laws, regulations, and relevant standards.
- Damage caused by negligence, gross negligence, wilful misconduct, improper operation or any cause not attributable to AEC.

1.2 Personal Safety

⚠ DANGER

Installation or removal of cables while the device is energized is strictly prohibited. Contact between cable cores and conductors may result in arcing or electrical discharge, thereby causing fire, equipment damage, or personal injury.

⚠ DANGER

During device operation, wearing conductive items, including but not limited to watches, bracelets, rings, and necklaces, is strictly prohibited, as this may result in electric shock or thermal burns.

⚠ DANGER

During device operation, only specialized insulated tools shall be used to prevent electric shock or short-circuit hazards. The insulation properties and voltage resistance levels of such tools must comply with all applicable local laws, regulations, standards, and industry norms.

⚠ WARNING

During device operation, appropriate personal protective equipment must be used, including but not limited to protective clothing, insulated footwear, safety helmets, insulated gloves.

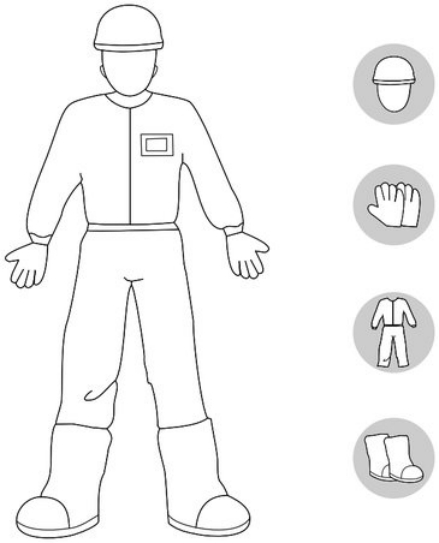

FIGURE 1-1 Protective device

- Device must be installed, operated, and maintained by qualified professionals. Professionals must have basic electrical knowledge, be familiar with the device's principles and structure, possess installation and operational experience, have received safety training, and be capable of identifying hazards and taking the correct actions.
- Do not disable the device's protective devices or ignore the warnings, cautions, and preventive measures outlined in the manual and on the device.
- Do not directly touch or allow other conductors to make contact or indirectly touch the power supply device through wet objects. Before touching any conductor surface or terminal, check the voltage at the contact point to ensure there is no risk of electric shock.
- Do not insert fingers or tools into operating fans in order to prevent damage to the device or injury to the operator.
- In the event of fire, evacuate the building or device area immediately, raise the fire alarm and call the emergency number (112 in the EU).

1.3 Device Safety

1.3.1 UPS Safety

> **NOTE**
> Category C3 UPS are used in all commercial, light industrial, and industrial zones connected to low-voltage power systems that are not directly supplying power to residential buildings, installation restrictions or additional measures may be required to suppress interference.

- For power supply systems that are critical to major economic interests or public order, such as national computing centers, emergency command centers, railway signal system and control centers, civil aviation and air traffic control centers, airport command centers, financial clearing centers, and trading centers, a TIER4 or TIER3 power supply architecture as specified by TIA-942 must be used, meaning dual power supply paths for the loads.
- The UPS should avoid operating in non-enclosed environments near the ocean (0~3.7 km), areas with uncontrolled temperature and humidity, or semi-enclosed environments. For example: simple computer rooms, residential buildings, garages, corridors, direct ventilation cabinets, houses with only a roof, train station platforms, gyms, and aquariums, etc., near the ocean.
- After removing the UPS packaging, it is recommended to power it up and run it as soon as possible.
- The UPS can be used for resistive-capacitive, resistive, and slightly inductive loads, but should not be used for purely capacitive, purely inductive, or half-wave rectifying loads, such as air conditioners, blowers, starters, drills, motors, fluorescent lamps, etc.
- The UPS front-end distribution must meet the requirements of IEC 60364-4-41 for electric shock protection.
- A circuit breaker equipped with a residual current device (RCD) is not recommended.
- If the effective voltage of the mains exceeds 320 VAC, the UPS may be damaged.
- During maintaining UPS, set the output to external maintenance bypass mode. To avoid power failure or load damage, ensure that the bypass input is within the specified power supply range.
- Manual inverter shutdown, adjustment of UPS output voltage mode or output frequency may affect the power supply to the load.

1.3.2 Battery Safety

DANGER

Battery work must be carried out with care, only by qualified personnel familiar with battery handling. Unauthorized personnel are prohibited from operating the batteries.

WARNING

Battery operation must be done according to battery instructions, especially battery cabling.

- The battery must not be used when the battery packaging is damaged, the battery terminals are dirty, corroded, rusted or the battery case is cracked, deformed or leaking liquid.
- Only use batteries of the same brand, model and quantity.
- Do not expose batteries to high temperatures, direct sunlight, high humidity, corrosive environment or heat-emitting devices.
- Do not subject batteries to mechanical vibration, drops, collisions, puncturing or pressure impacts to avoid damage or fire.
- Do not disassemble, modify or damage the battery to prevent leakage, release of flammable gases, fire or explosion.
- When handling or installing batteries, avoid pulling on the battery terminals to prevent damaging the connection.
- Lead-acid batteries release flammable gases during operation, so ensure the battery installation area is well-ventilated and has fire prevention measures to avoid fire hazards.
- Battery connections must be secure and reliably fastened. Tighten the terminal screws according to the provided torque and regularly check for tightness. Loose terminals may cause poor connections, arcing, or heat accumulation, which could lead to fire.
- After discharging the battery, the battery should be charged in time, otherwise the battery may be damaged due to overdischarge.
- Check if the battery is grounded. If so, remove the grounding. Touching any part of a grounded battery may lead to electric shock.
- Ensure the UPS charging voltage matches the battery voltage. If unsure, consult AEC technical support.
- Do not short-circuit the positive and negative terminals of a single battery or battery pack, as this will cause a short circuit. Avoid simultaneously touching any two terminals or the exposed ends of battery cables to prevent damage or injury. When installing or maintaining batteries, cover the exposed terminal ends with insulating tape.
- Prevent electrolyte spillage from lead-acid batteries.
  - Electrolyte is corrosive, and can corrode metal objects and circuit boards, causing short circuits.
  - Electrolytes may cause skin irritation or chemical burns. If contact occurs, immediately rinse with plenty of water and seek medical treatment.
  - If electrolyte spillage is discovered, contact AEC technical support immediately. Professionals should wear goggles, rubber gloves, gas masks and protective clothing, and follow the battery manufacturer's instructions, or use sodium bicarbonate (NaHCO)

3

or sodium carbonate (Na CO) to neutralize and absorb the electrolyte.

2 3

NOTE

When the battery temperature exceeds 60°C, check for electrolyte spillage. If spillage occurs, handle it promptly.

- At the end of the battery's lifespan, internal faults such as short circuits, electrolyte depletion, or corrosion of the positive plate grid may occur, which can lead to thermal runaway, swelling or leakage. Replace the battery promptly.
- When installing and commissioning the battery, ensure fire safety device such as fire sand or CO extinguishers is provided as per construction standards. Once the battery is in use,

2

ensure the battery room has a fire protection system compliant with local laws and regulations, and is in automatic or manual control mode.

- Dispose of used batteries according to local laws and regulations. Do not dispose of batteries as household waste.

1.4 Mechanical Safety

DANGER

Work at height must be performed while wearing a helmet and using a safety belt or waist rope that is fastened to a firm and stable structural part. It is strictly prohibited to attach the belt or rope to moving or unstable objects, or to metal surfaces with sharp edges or corners, so as to prevent hook slippage and falls.

WARNING

Tools must be prepared and certified by professional organizations. Do not use tools that are damaged, have failed inspection, or are beyond their inspection validity period, to ensure they are not overloaded.

WARNING

Before installing the device into the cabinet, first ensure that the cabinet is securely fixed to prevent tipping due to an unstable center of gravity, which could result in injury to installation personnel and damage to the device.

WARNING

When pulling device out of the rack, be cautious of any unstable or heavy device inside the cabinet to avoid being crushed or injured.

WARNING

Do not drill holes in the device. Drilling will damage the sealing electromagnetic shielding, internal components and metal shavings from drilling will enter the device and cause a short-circuit on the circuit board.

- Paint scratches during transport and installation of the device must be repaired in time, and long-term exposure of the scratched part is strictly prohibited.
- Do not weld, cut or carry out similar work on the device without AEC's assessment.
- Do not install other devices on top of the device without AEC's assessment.
- When working in the space above the top of the device, additional protection should be added to the top of the device to avoid device damage.
- Use correct tools and operate them in the correct way.

MOVING HEAVY OBJECTS

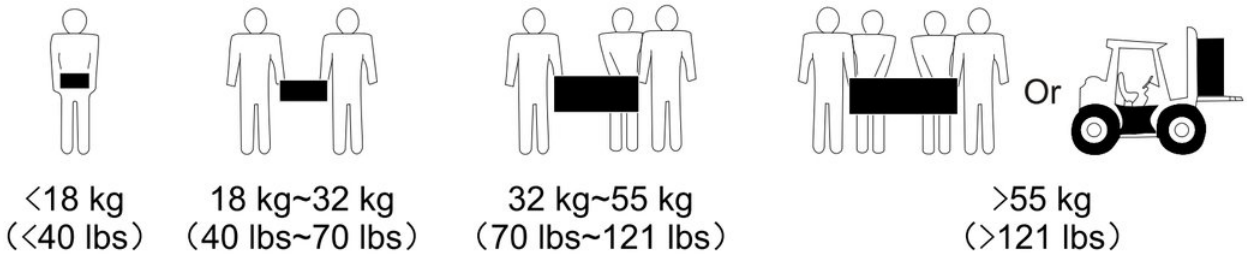

FIGURE 1-2 Moving heavy objects

- To move a device by hand, lift the device slowly and stably. Do not lift it suddenly or turn or twist your body.
- Move or lift the device by holding its handles or lower edges.
- Move a heavy object stably with balanced force at an even and low speed. Put down the object stably and slowly to prevent any collision or drop that may cause scratches on the surface of the device or damage to the components and cables.
- When moving a heavy object, be aware of the workbench, slope, staircase, and slippery places. When moving a heavy object through a door, ensure that the door is wide enough to move the object and avoid bumping or injury.
- When moving large device, if the freight elevator cannot be used, keep the device vertical (inclination angle α≤15°), prohibit horizontal, and contact professionals to get a reasonable moving method.

WORKING AT HEIGHTS

> **NOTE**
> Any work performed 2 m or more above the ground is considered work at height.

- Do not work at heights when steel pipes are wet or other risky situations exist. After the preceding conditions no longer exist, the safety owner and relevant technical personnel need to check the involved device. Operators can begin working only after safety is confirmed.
- Set a restricted area and prominent signs for working at heights to warn irrelevant personnel away.
- Set guard rails and warning signs at the edges and openings of the area involving working at heights to prevent falling.
- Do not pile up scaffolding, springboards, or other sundries on the ground under the area involving working at heights. Do not stay or pass under the area involving working at heights.
- Personnel involving working at heights are not allowed to throw objects from the height to the ground, or vice versa. Objects shall be transported by slings, hanging baskets, highline trolleys, or cranes.
- Do not perform operations on the upper and lower layers at the same time. If unavoidable, install a dedicated protective shelter between the upper and lower layers or take other protective measures. Do not pile up tools or materials on the upper layer.
- Personnel working at height must strictly comply with the safety regulations. AEC is not responsible for any accident caused by violating the safety regulations for work at height.
- Behave cautiously when working at heights. Do not rest at heights.

USING LADDERS

> **NOTE**
> Use wooden or insulated ladders when you need to perform live-line working at heights.

- Platform ladders with protective rails are preferred. Single ladders are not recommended.
- Before using a ladder, check that it is intact and confirm its load bearing capacity. Do not overload it.

- Ensure that the ladder is securely positioned and held firm.
- When climbing up the ladder, keep your body stable and your gravity center between the side rails, and do not overreach to the sides.
- When a step ladder is used, ensure that the pull ropes are secured.
- If a single ladder is used, the recommended angle for the ladder against the floor is 75 degrees. A square can be used to measure the angle.

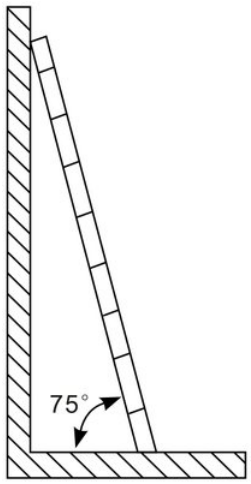

FIGURE 1-3 Single ladder requirements

- If a single ladder is used, ensure that the wider end of the ladder is at the bottom, and take protective measures to prevent the ladder from sliding.
- If a single ladder is used, do not climb higher than the fourth rung of the ladder from the top.
- If you use a single ladder to climb up to a platform, ensure that the ladder is at least 1m higher than the platform.

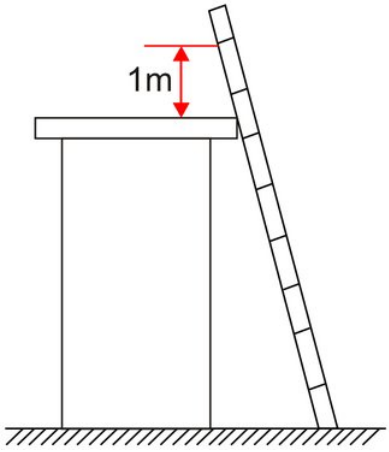

FIGURE 1-4 Single ladder requirements

HOISTING

Only trained and qualified personnel are allowed to perform hoisting operations.

- Install temporary warning signs or fences to isolate the hoisting area.
- Foundation where hoisting is performed meets the loadbearing requirements.
- Before hoisting objects, ensure that hoisting tools are firmly secured onto a fixed object or wall that meets the load-bearing requirements.
- During hoisting, do not stand or walk under the crane or the hoisted objects.

- During hoisting, do not drag steel ropes and hoisting tools or bump hoisted objects against hard objects.
- Angle between two hoisting ropes is no more than 90°.

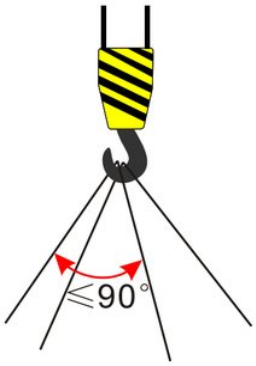

FIGURE 1-5 Hoisting requirements

1.5 Electrical Safety

DANGER

Before connecting cables, ensure that the device is intact. Otherwise, electric shocks or fires may occur.

WARNING

- Do not reversely connect the grounding wire and neutral wire, live wire and neutral wire, otherwise, it will cause short circuit.
- It should be well grounded and the voltage between grounding wire and neutral wire should be no more than 5V.

- Set warning signs or safety warning belts in the operation area to avoid personnel injury or device damage caused by irrelevant personnel.
- Follow the procedures described in this manual for installation, operation, and maintenance. Do not reconstruct or alter the device, add components, or change the installation sequence without permission.
- Before installing or removing power cables, turn off the switches of the device and its upstream and downstream switches.
- Incorrect electrical connections may cause device damage, which is not within the scope of the quality guarantee of the device.
- Even if all external powers are disconnected, there still exists residual charge on the capacitor inside the UPS, and there still exists high voltage on the output copper bar that may endanger personal safety. It is necessary to set the UPS aside for enough time (≥15 minutes) to release all charge before opening the UPS chassis.
- All electrical connections must comply with the local battery/region electrical connection standards.

NOTE

Any change to the UPS configuration, structure or components affects UPS performance. Consult AEC before making any change.

GROUNDING REQUIREMENTS

WARNING

The device must be grounded before connecting cables. The grounding terminal must be connected to earth.

- When installing device, it must be grounded first. When dismantling device, the grounding wire must be removed at last.
- Do not damage the earth conductor.
- Device must be connected to protection grounding permanently. Before operation, check the electrical connection to ensure the device is grounded reliably.

CABLING

- When selecting, installing, and routing cables, follow local safety regulations and rules.
- Select the flame spread cables.
- All cables are properly connected and insulated, and meet specifications.
- When routing cables, reserve at least 30 mm space between the cables and heat- generating components or areas. This prevents deterioration or damage to the cable insulation layer.
- Cables of the same type are bound together. When routing cables of different types, ensure that they are at least 30 mm away from each other.
- The surface layer of large bundles of wires should be straightened to eliminate crossover phenomenon. The wire bundle should be kept straight and the height of the cable tie of the horizontal wire bundle should be the same.
- When the bundled wires are turned, the cable ties should be tied on both sides of the corner.
- If a cable is connected to the cabinet from the top, bend the cable in a U shape outside the cabinet and then route it into the cabinet.
- When the temperature is low, violent impact or vibration may damage the plastic cable sheathing. To ensure safety, comply with the following requirements:
  - Cables can be laid or installed only when the temperature is higher than 0°C. Handle cables with caution, especially at a low temperature.
  - Cables stored at subzero temperatures must be stored at room temperature for at least 24 hours before they are laid out.

ESD

CAUTION

The static electricity generated by human bodies may damage the electrostatic sensitive components on boards, before contacting the electrostatic sensitive components (such as plug-in board, circuit board or IC chip, etc.), wear ESD gloves or a well-grounded ESD wrist strap.

- When holding a board, hold its edge without touching any components. Do not touch the components with bare hands.
- Pack boards with ESD packing materials before storing or transporting them.

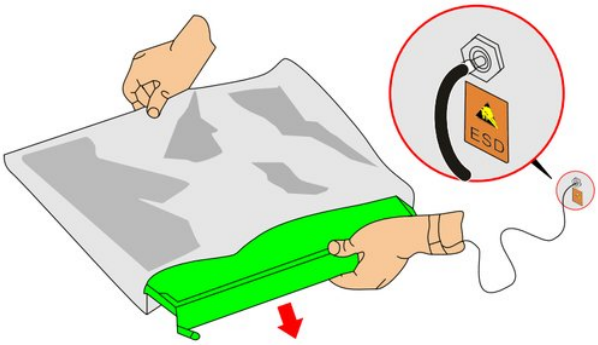

FIGURE 1-6 Board unpacking diagram

1.6 Operation Safety

DANGER

Device has high voltage, and accidental contact may result in electric shock.

Do not touch any terminals or components of the device while it is in operation, otherwise there may be a risk of electric shock.

1.7 Maintenance Safety

CAUTION

Improper maintenance operations may result in personal injury or device damage.

- Place warning signs or safety warning belts in the operation area to prevent irrelevant personnel from entering the maintenance site.
- Place warning signs where the switches are to avoid switching them on improperly.
- Before maintenance, ensure that there is no voltage or current in the UPS input and output. Wear protective equipment to maintain the UPS.
- Restart the device only after removing faults that affect the safety performance of the device.
- There is still a risk of burn after the device is shut down. After the device cools down, wear protective gloves before operating the device.
- Do not replace internal components of the UPS without authorisation. AEC accepts no warranty claim or liability for any damage caused.
- Danger of electric shock! Do not touch the contacts or terminals connected to the grid or devices.

1.8 Transportation Requirements

- The packaged products shall not be loaded in the open cabins and carriages during long distance transportation, shall not be stored in the open storage during transit, shall not be loaded with flammable, explosive and corrosion-prone items (or other transportation means) during transportation, and shall not be subjected to rain, snow or liquid substances and mechanical damage.
- Suitable for transport by car, train, ship and plane. The package must be in good condition to avoid dampness, dust, vibration and chemical corrosion during transportation.
- Do not stack.

1.9 Storage Requirements

- The device should be stored in the original packaging, and its storage environment temperature is -25 °C~55 °C, and relative humidity is 0%RH~95%RH. All kinds of hazardous gases, flammable and explosive substances and corrosive chemicals are not allowed in the warehouse, and it should be free from strong mechanical vibration, impact and strong magnetic field effect.
- The packing box should be at least 10cm away from the ground and at least 50cm away from the wall, heat source, cold source, window or air inlet. If the packing box is found to be bitten by worms or damaged, please replace it in time.
- The packing box cannot be tilted or inverted.
- If not specified otherwise, the storage period should be six months. If the storage period is more than six months, then batch by batch inspection should be re-conducted. For long term storage, the battery should be charged every three months.



FIGURE 1-7 Storage environment requirements

⚠ CAUTION

Please store the device according to the storage requirements, if the device is damaged due to the storage conditions do not meet the requirements, it will not be covered by the warranty.

CHAPTER 2

02 Overview

IN THIS CHAPTER

2.1 Product Intro
2.2 Appearance
2.3 Structure Layout
2.4 Components Description
2.5 Working Principles and Modes
2.6 Optional Components
2.7 Alarm Protection Function

THE UPS AT A GLANCE



Front: touch screen and status lamp



Door open: power modules



Rear

2.1 Product Intro

IST6-600 to IST6-1200 products are an online double-conversion UPS system, consisting of a UPS cabinet, power modules, bypass module, system control box, and distribution. The entire system is designed with a modular approach, allowing users to easily add, remove, or replace power modules online without worrying about affecting the normal operation of the system. The system is a high-performance sine wave UPS, specifically designed for the network server rooms and precision instruments of finance, communications, insurance, transportation, taxation, military, securities, energy, education, government, and enterprises.

2.1.1 Typical Configuration

TABLE 2-1 UPS typical configuration

Configuration	Application scenario
Single device	Supplies power to common loads, with multi-module redundancy and high reliability.
Parallel system	Supplies power to large-scale data centers or important loads, with high reliability and strong transient overload resistance capability.
BSC system	• Supplies power to important loads, such as medium and large computer rooms, data centers, etc., with higher reliability than the parallel system, but the configuration is more complex. • BSC systems include dual bus mode and multi-bus mode.

SINGLE DEVICE

In single device mode, different numbers of power modules can be selected according to load capacity. Uniform load sharing between modules ensures that failure in one power module does not affect the normal operation of others. A multi-module redundant configuration allows the UPS to maintain high reliability in single-device mode.

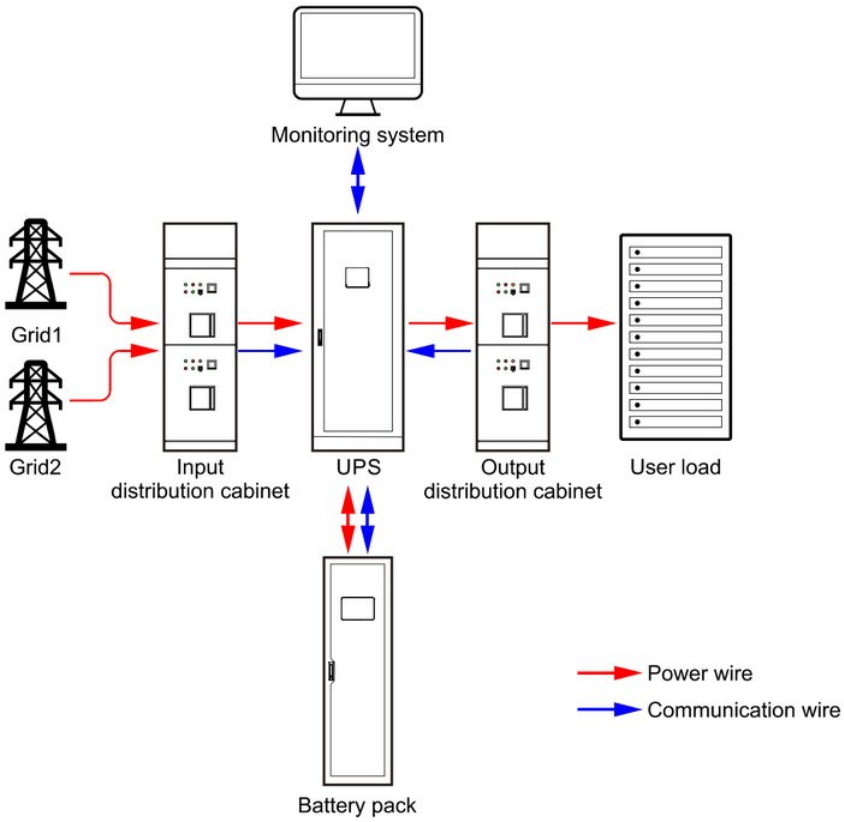

FIGURE 2-1 Typical application scenario in the single UPS mode

PARALLEL SYSTEM

In parallel mode, the mains input, bypass input, and AC output of each UPS cabinet are connected in parallel, and then the CCM (Central Control Module) of each UPS cabinet is connected together through parallel wires to keep the outputs of each cabinet synchronized and supply power to load together. When a UPS cabinet malfunctions, other UPS systems will continue to supply power to the load to ensure its normal operation, demonstrating the high reliability of the parallel mode.

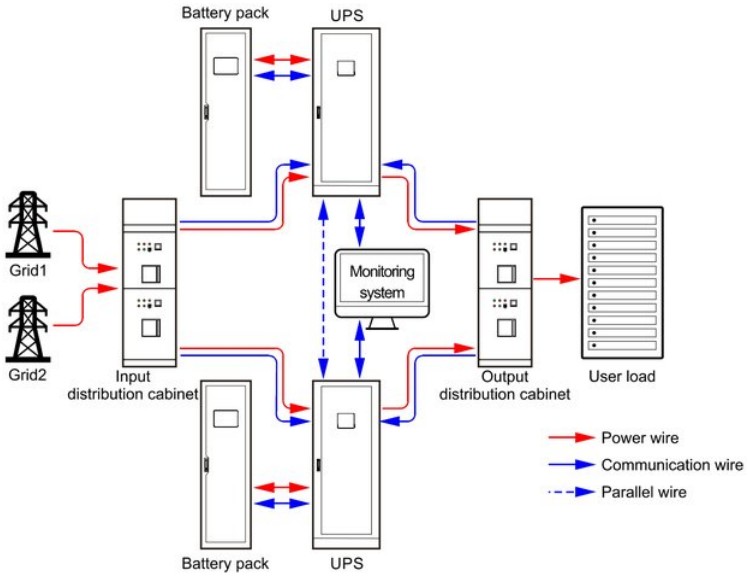

FIGURE 2-2 Typical application scenario in the parallel UPS mode

BSC SYSTEM

The BSC system (Bus Sync Controller) refers to a bus synchronization control system, which uses software control to ensure the output synchronization of multiple power sources under different bus inputs, thereby ensuring the continuity of load input in the event of a UPS failure. According to different application scenarios, BSC systems are divided into dual-bus mode and multi-bus mode with the multi bus mode supporting three bus numbers.

- Dual-bus system

A dual-bus system consists of two independent UPS systems. Each UPS system consists of a UPS in the single UPS mode. For single-power loads, a static transfer switch (STS) can be configured to ensure the power switch when the bus fails, which greatly improves the system reliability.

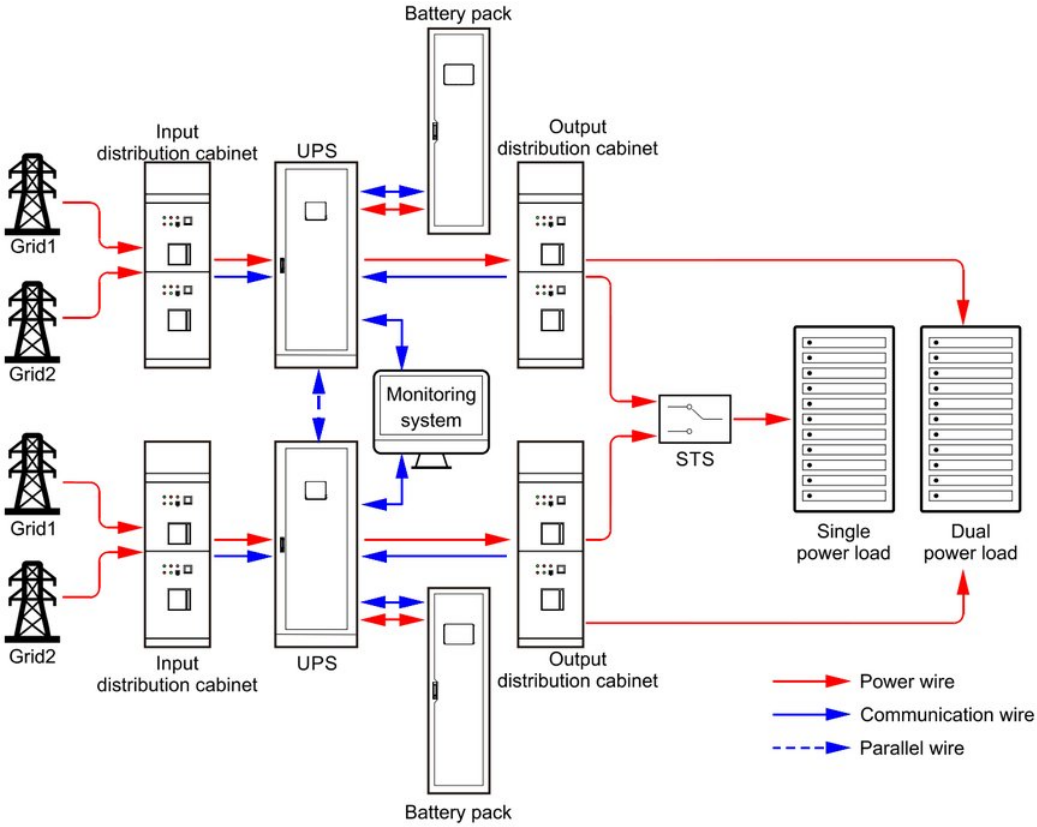

FIGURE 2-3 Typical application scenario in the dual-bus system mode

- Multi-bus system

A multi-bus system consists of multi independent UPS systems. Each UPS system consists of a UPS in single mode. The multi-bus system is suitable for dual-power load. For single-power load, a static transfer switch (STS) can be configured to ensure the power switch when the bus fails. Multi-bus system has higher reliability than single-bus system, but less reliable than dual- bus system.

> **NOTE**
>
> Both single system and parallel system can operate multi bus systems.

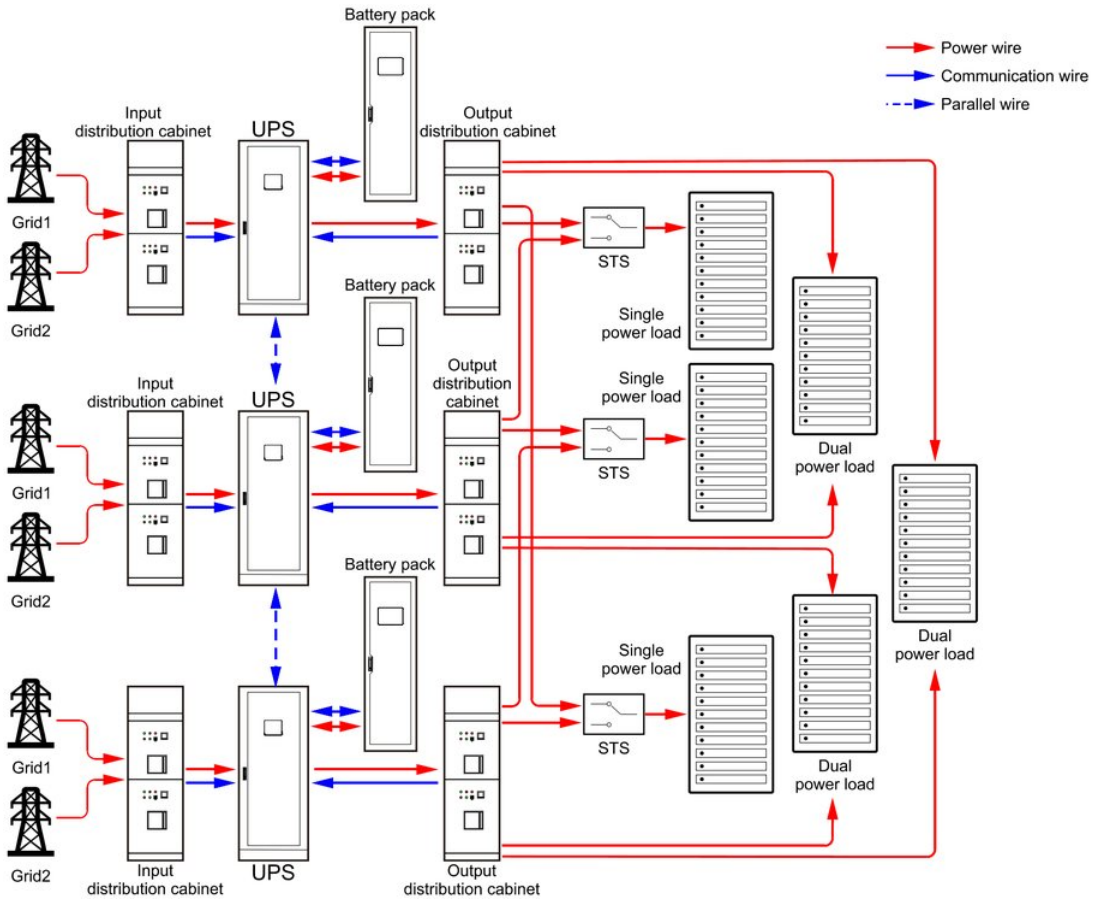

FIGURE 2-4 Typical application scenario in multi-bus system mode

2.1.2 Product Features

HIGH RELIABILITY

- **Wide input voltage range** -60%~25% and **wide input frequency range** 40-70Hz with high grid adaptability and prolong battery life.
- **All module hot-swappable** design ensures uninterrupted operations during maintenance and easy for module replacement.
- **High overload capacity** on inverter for 105% load long term, 125% load 10 mins and 150% load 1min.
- The most advanced and dual DSP control prevents single failure point and increase performance.
- Intelligent fan control and redundant design: 15% load can be driven when 2 fans fail and 40% load when 1 fan fails.
- **All-round conformal coating** to all PCB boards to protect electronics from environmental effects and corrosion.
- **Multilevel electrical isolation design**, frame and modules equip with fuse, which isolate the abnormal condition and make sure safety.
- High short circuit capacity with time duration settable from **20~400ms** which provide high protection for system.
- **Standard dust filter** protect UPS placed in dusty environment.
- Cold start function which allows UPS start on battery when grid isn't available.
- Bus synchronization control function provides reliable high power for dual bus application.
- **Power walk in function** decreases the inrush to mains or generator.
- Startup delay function to sequentially restart the rectifiers once the mains power supply is restored if there are several UPS within the overall system.
- No derating operates up to 40°C and continuously running under **high ambient temperature up to 55°C** with power derating.

GREEN POWER

- **Latest generation IGBT and three level technology**, low harmonic, high efficiency, effectively energy-saving.
- **General AC/AC efficiency** in on-line mode up to **97.2%**; **High efficiency PLUS power module** up to **98.1%,** reduces heat dissipation and limits power consumption costs.
- W-ECO mode efficiency could reach 99%, THDi below 5% and transfer time below 0ms to reduce TCO.
- ECO mode efficiency up to 99.2% lead to significant cost reduction.
- Low **THDi≤1.5%** and input power factor 0.99 reduce the pollution to grid and reduce upstream investment costs.
- **3U 100KW power module** make sure utility output power (kVA=kW) to maximize power availability and **high-power density** cabinet up to 800KW only 0.8m² and 1.2MW only 1.2m².
- **Self-load test function**, easy debugging and easy onsite test during commissioning without using costly temporary loads, cabling and breakers for energy saving.
- **Intelligent sleep mode** which UPS module sleep in random keep maximum efficiency and energy saving.
- 8 units of intelligent paralleling helps to achieve maximum capacity up to 9.6MW.

INTELLIGENT MANAGEMENT

- **Fault Trace Management (FTM)** for convenient failure analysis (waveform record before & after of the fault point for 200ms) which easily figure out faulty point.
- **Maintenance assistant** locates the problem easily and quickly, Reduce time for maintenance.
- Start-up guidance and diagnosis help to clear potential risk before power on the system.
- **Energy Storage Mode** allow system working Intelligent peak cutting and valley filling, using the peak and valley electricity price difference, reduce TCO.
- 3 stage battery charging and single power module up to **100A charger** prolong the service life of batteries.
- Intelligent battery management and multiple setting, 30-50pcs* batteries per string allow customers to get the faulty battery out instead of replacing it.
- **Key components pre-alarm** function, which provides precaution for the system fault and reminds of maintenance for key components, such as capacitors and fans.
- Full asset management record the spare parts replacement, timeline and service people.
- Cabinet temperature detection and pre-notification which prevent over temperature.
- **Smart programmable dry contact** which has 6 input dry contact and 3 output dry contact, which input dry contact have 10 functions and output dry contact have 18 functions allows to settable at site.
- Smart generator mode which allows UPS sent signal to turn on and off generator, also taking part power from battery to compensation generator capacity.
- **Self-dedusting function** which save the preventive service time.
- Frequency converter function (60Hz to 50Hz or 50Hz to 60Hz).
- VRLA and Lithium battery compatible design.

USER-FRIENDLY INTERFACE

- Double physical ON/OFF button design to avoid false operation.
- User-friendly graphical interface with Single-line mimic diagram showing system status.
- Colorful 7-inch **touch screen** with LED Indicators, ensure comprehensive and visualized information display.
- **Multicolor LED bar** allowing quick and easy detection of the system status and simplified troubleshooting.
- **Multi-language built-in display: English, Italian, French, Spanish, German, Portuguese, Polish, Russian, Korean and Chinese.**
- High security access with separate password levels for users, technician and service engineers.
- Large data storage capacity,10000pcs events logs.

- Support firmware online update, one time update for touch screen, power unit, bypass unit and extended card.
- Main unit display allows to check the information of each UPS status during parallel mode.

MORE OPTIONS

- Network Management: SNMP card.
- Li battery communication: BMS expansion card.
- Backup: VRLA or Lithium battery.
- SPD: Class-C.
- Battery temperature compensation kit.
- Battery trip control kit.
- Dry contact expansion card.
- Parallel kit of different lengths.
- Top air outlet assembly.
- Back-feed protection kit.
- Distribution cabinet.

2.2 Appearance

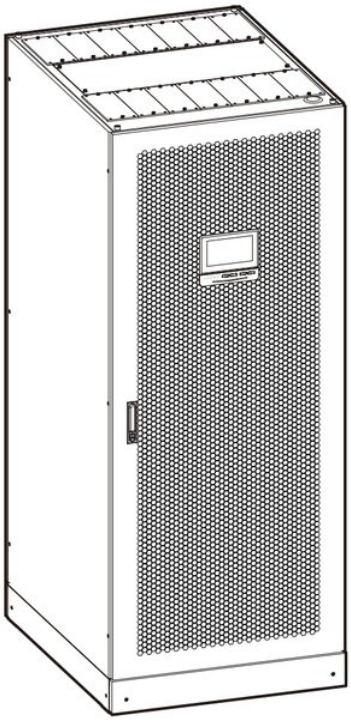

FIGURE 2-5 Appearance of IST6-600

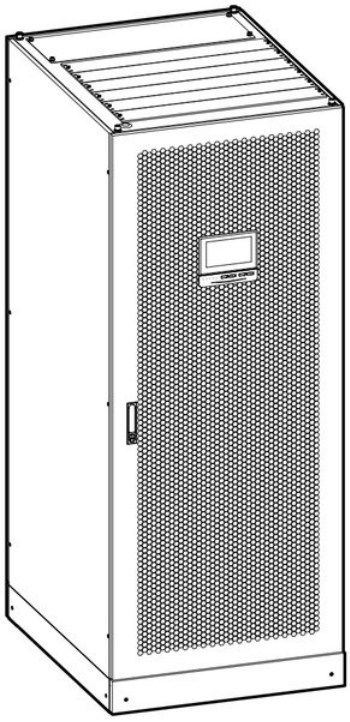

FIGURE 2-6 Appearance of IST6-800

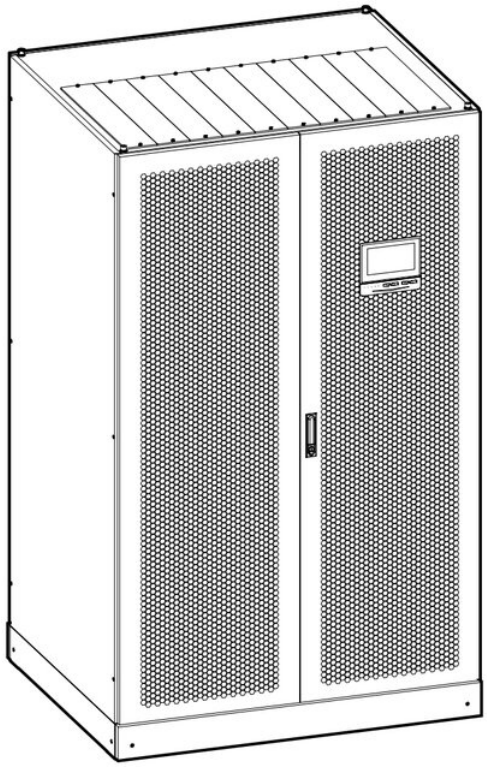

FIGURE 2-7 Appearance of IST6-1000, IST6-1200

OPERATION PANEL

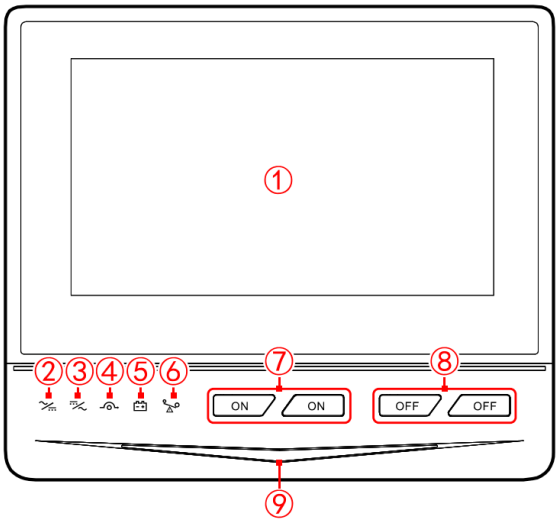

FIGURE 2-8 Operation panel

TABLE 2-2 Operation panel description

No.	Mark	Name	Description
	-	Touch screen	Display the running parameters (e.g. voltage, current, load capacity, etc.) and status.
		AC/DC indicator DC/AC indicator	• On (green): Rectifier works normally. • On (red): Rectifier works abnormally. • On (green): Inverter works normally. • On (red): Inverter works abnormally.
		Bypass indicator	• On (green): Bypass outputs normally. • On (red): Bypass is abnormal.
		Battery indicator	• On (green): Battery output. • On (red): Battery low-voltage.
		Load indicator	• On (green): Output normal. • On (red): Output overload
	ON	ON combination button	Press the two buttons for 3s to power on the UPS.
	OFF	OFF combination button	Press the two buttons for 3s to power off the UPS.
	-	Status indicator	• On (blue): UPS works normally. • Flashing (blue): Battery output. • On (yellow): UPS is abnormal but does not affect the working. • On (red): UPS is abnormal and does not work.

SYMBOL ON THE DEVICE

TABLE 2-3 Instructions of the labels on the UPS

Symbol	Meaning
	No trampling
	High leakage hazard
	Beware of electric shock
	Please refer to the user manual of the product when using
	Ten years environment symbol

Symbol	M
	De grounding symbol

⚠ WARNING

All safety symbols, warning labels, and nameplates on UPS must be clearly visible and cannot be removed or covered.

2.3 Structure Layout

IST6-600

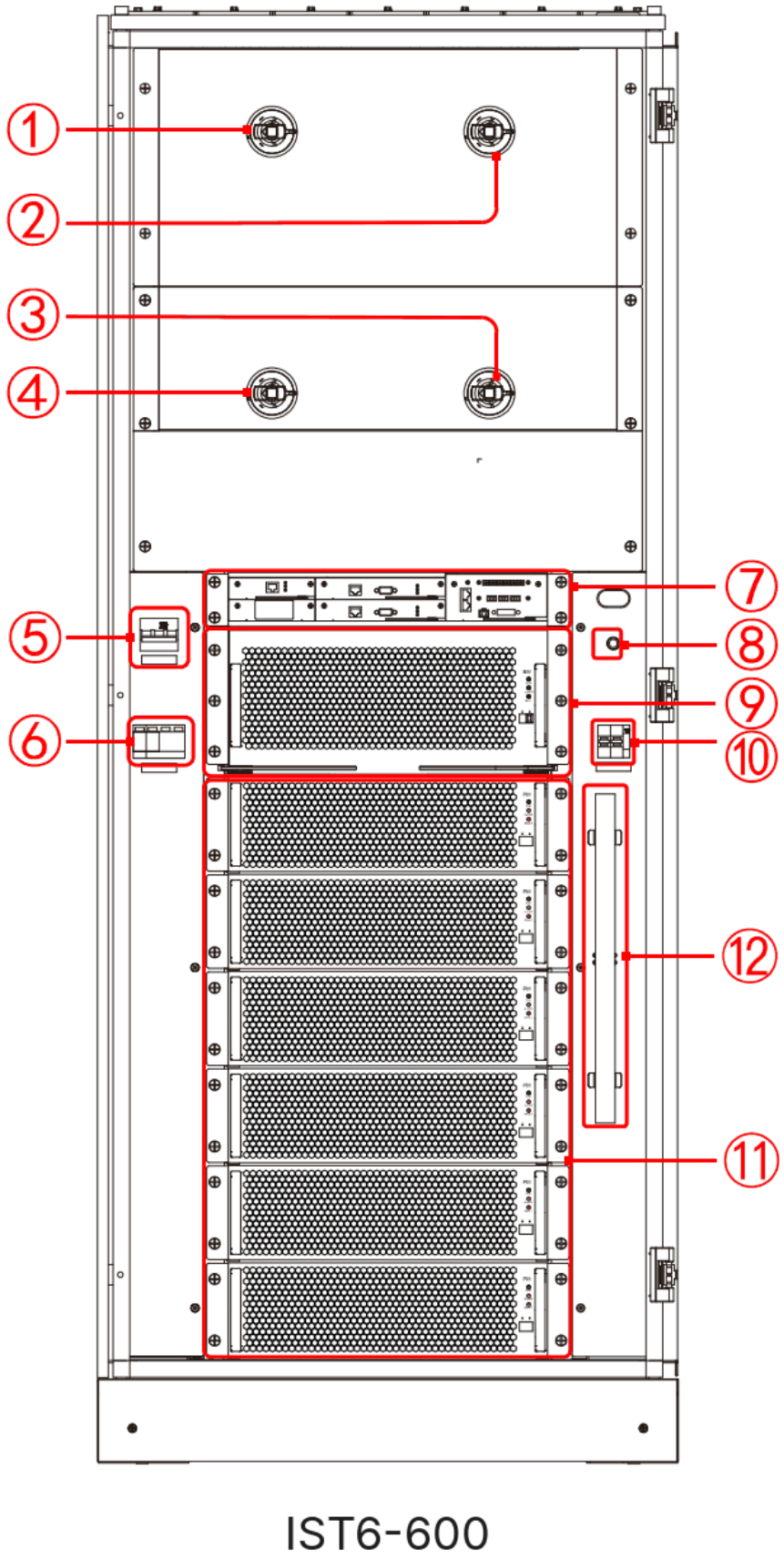

FIGURE 2-9 Structure layout diagram of IST6-600 (open front door)

TABLE 2-4 Structure layout description of IST6-600

No.	Name	No.	Name
	Mains switch Output switch		System control box Battery cold start button
	Maintenance bypass switch		Bypass module
	Bypass switch		Fan control switch (optional)
	SPD switch (optional)		Power module
	SPD (optional)		Switch operating lever

> **NOTE**
> IST6-600 can be customized without switch versions, which do not include components ①②③④.

IST6-800, IST6-1000, IST6-1200

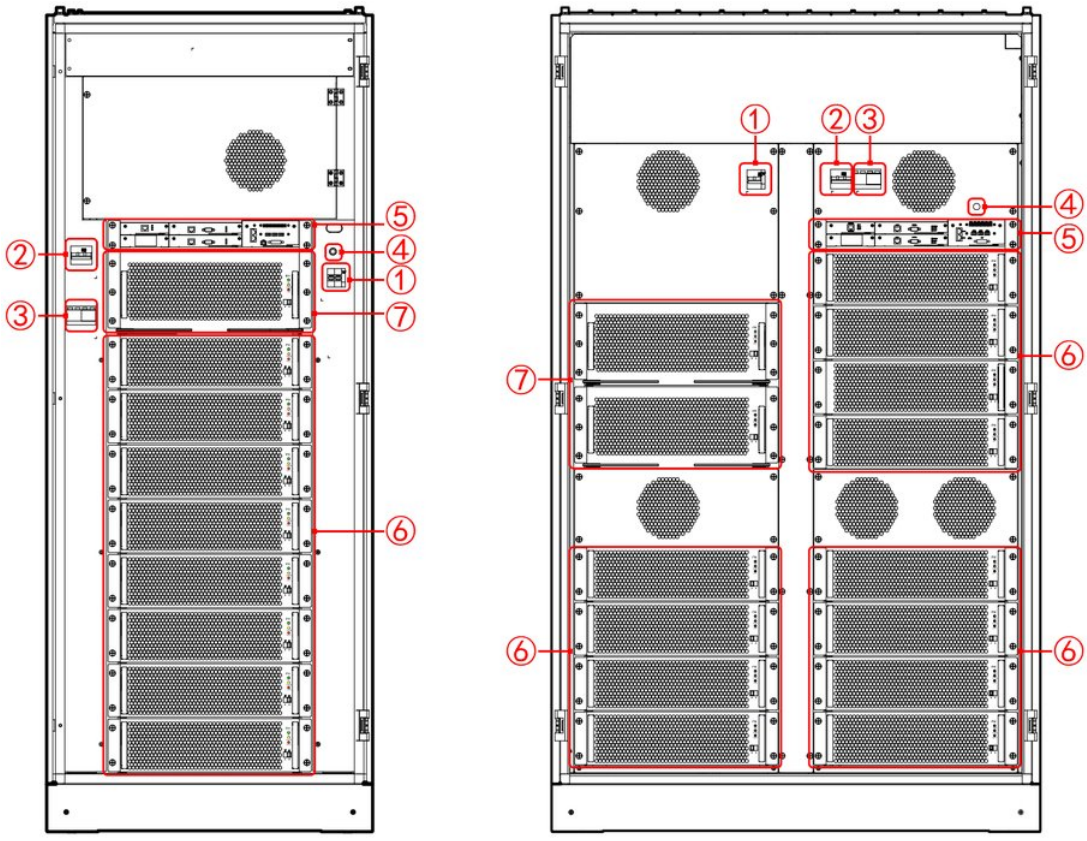

FIGURE 2-10 Structure layout diagram (open front doors)

TABLE 2-5 Structure layout description

No.	Name	No.	Name
	Fan control switch		System control box
	SPD switch (optional)		Power module
	SPD (optional)		Bypass module
	Battery cold start button	-	-

> **NOTE**
>
> The bypass modules, power modules, and system control boxes of IST6-800, IST6-1000, and IST6-1200 are the same; for details, refer to "**2.4 Components** ". The structure layout of IST6-1000 and IST6-1200 are similar, with the only difference being the number of power modules (IST6-1000: 10 modules; IST6-1200: 12 modules). Figure 2-19 illustrates this with the IST6-1200 as an example.

2.4 Components Description

2.4.1 Power Module

Power module mainly consists of rectifier, inverter and DC/DC converter, which is to convert the mains input and battery input into a stable DC bus through the rectifier and DC/DC converter, and then convert the DC bus into a sine wave output through the inverter.

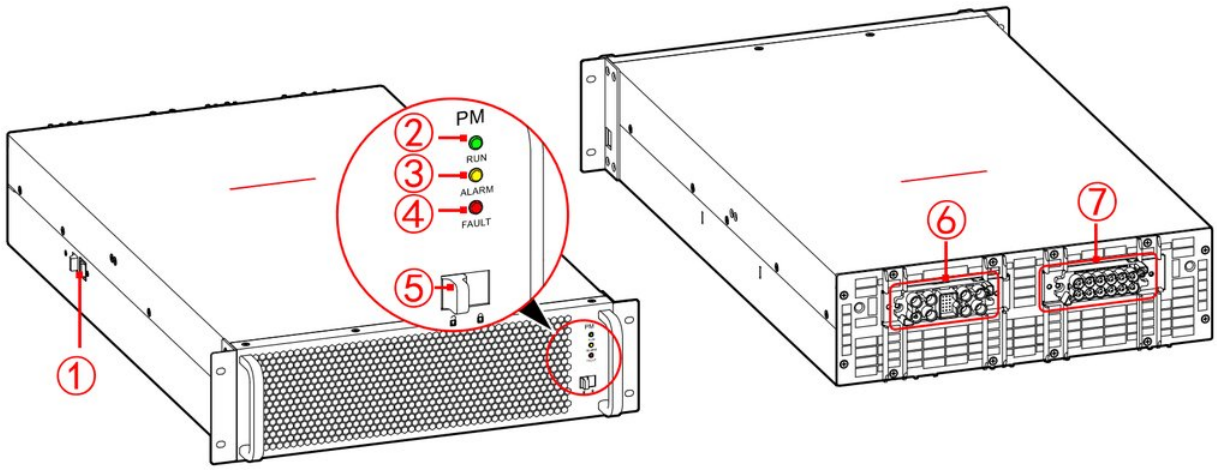

FIGURE 2-11 Appearance

TABLE 2-6 Power module description

No.	Mark	Name	Color	Description
	-	Limit lock	-	When plugging out the power module, the limit lock must be pressed to ensure the power module can be removed smoothly.
	RUN	Run indicator	Green	• On: Power module is in the inverter status. • Flashing: Power module is in standby status. • Off: Power module is not in inverter status.
	ALARM	Alarm indicator	Yellow	• On: Power module input voltage abnormal, fan abnormal, overload, etc. • Off: Power module has no alarm.
	FAULT	Fault indicator	Red	• On: Power module is faulty. • Off: Power module is working properly.
	-	Ready switch	-	• Place the ready switch in status, the indication color is green, the power module is not locked with the cabinet, at this time, the power module can be dismantled. • Place the ready switch in " " status, the indication color is red, the power module is locked with the cabinet, at this time, the power module cannot be dismantled.
	-	Output port	-	Connects to AC output of UPS.
	-	Input port	-	Connects to AC mains input and DC battery input of UPS.

2.4.2 Bypass Module

The Bypass module consists of a static switch and a filtering device. When abnormal conditions such as overload, over-temperature, etc. occur in the power module or when the system is abnormal, the static switch automatically transfers the load to the bypass power supply. Additionally, when the UPS operates in ECO/WECO mode and the bypass voltage is within the set range, the bypass supplies power to the load.

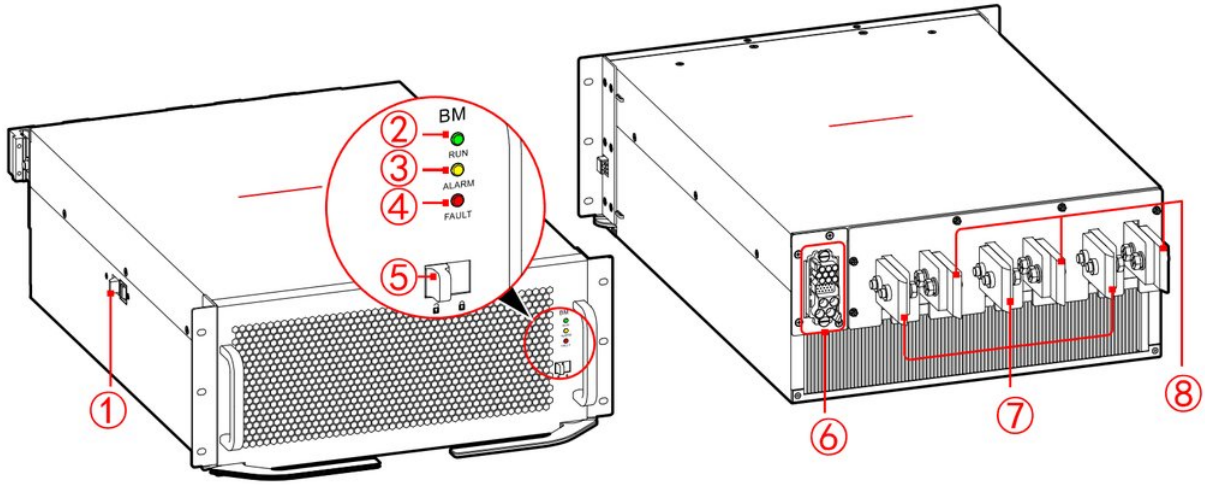

FIGURE 2-12 Appearance (4.5U) (applicable for IST6-600, IST6-800, IST6-1000, IST6-1200)

TABLE 2-7 Bypass module description

No.	Mark	Name	Color	Description
	-	Limit lock	-	When plugging out the bypass module, the limit lock must be pressed to ensure the bypass module can be removed smoothly.
	RUN	Run indicator	Green	• On: Bypass module is in the inverter status. • Flashing: Bypass module is in standby status. • Off: Bypass module is in off-line or fault status.
	ALARM	Alarm indicator	Yellow	• On: Bypass module input voltage abnormal, fan abnormal, overload, etc. • Off: Bypass module has no alarm.
	FAULT	Fault indicator	Red	• On: Bypass module is faulty. • Off: Bypass module is working properly.
	-	Ready switch	-	• Place the ready switch in status, the indication color is green, the bypass module is not locked with the cabinet, at this time, the bypass module can be dismantled. • Place the ready switch in " " status, the indication color is red, the bypass module is locked with the cabinet, at this time, the bypass module cannot be dismantled.
	-	Communication port	-	External communication port with hot-swappable function.
	-	Output port	-	Connects to AC output of UPS.
	-	Input port	-	Connects to AC bypass input of UPS.

2.4.3 System Control Box

System control box contains the expansion card (optional), SNMP card (optional), system control card 1, system control card 2, and system monitoring card. All types of cards are hot- swappable.

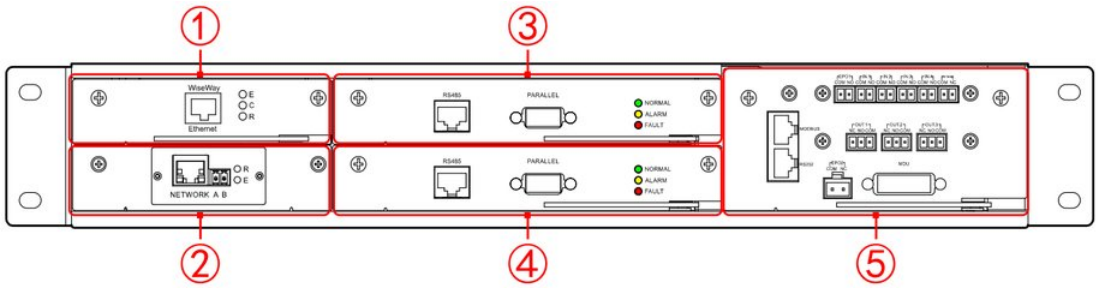

FIGURE 2-13 Appearance

TABLE 2-8 Layout description

No.	Description	No.	Description
	Expansion card (optional)		System control card 2
	SNMP card (optional)		System monitoring card
	System control card 1	-	-

> **NOTE**
>
> The expansion card can be optionally equipped with a BMS or dry contact expansion card. For details, refer to "**2.6 Optional Components**". The system control card 2 is identical to the system control card 1.

SYSTEM CONTROL CARD

The system control card centrally controls the machine's operating logic and fault monitoring acting as the brain of the entire system. Through in-cabinet CAN communication and inter- cabinet CAN communication, it manages the synchronization and equalized current of all modules within and between cabinets, ensuring synchronized output from all power modules and an even distribution of load. It also provides the monitoring system with the operating status and fault information of the cabinets. The two system control cards serve as backup redundancy for each other.

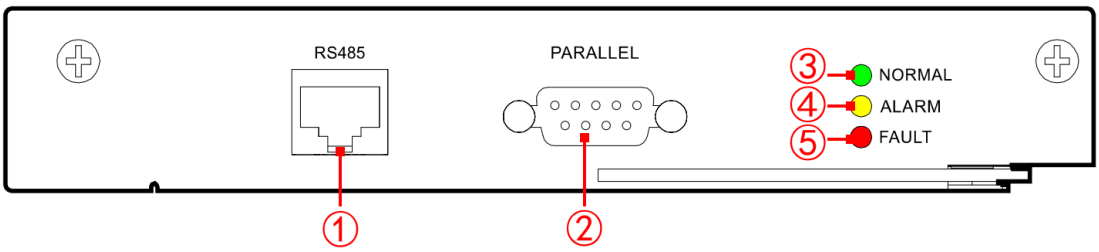

FIGURE 2-14 Appearance

TABLE 2-9 System control card description

No.	Mark	Name	Color	Description
	RS485	RS485 port	-	Used for one machine to monitor the running information of other parallel systems. The RS485 port is connected by an RJ45 plug, and its pin definition is shown in Figure 2-15. When the system is used in parallel, connect the RS485 ports together to enable intelligent display functions, the connection is shown in Figure 2-16 and Figure 2-17.
	PARALLEL	Parallel/BSC port	-	Inter-cabinet parallel /BSC signal port
	NORMAL	Run indicator	Green	• On: The system controller card is in the primary card status. • Flashing: The system controller card is being initialized. • Off: The system controller card is faulty.
	ALARM	Alarm indicator	Yellow	• On: The system controller card has an alarm signal. • Flashing: The system controller card is in the secondary card status. • Off: The system controller card has no alarm.
	FAULT	Fault indicator	Red	• On: The system controller card is faulty. • Off: The system controller card works properly.

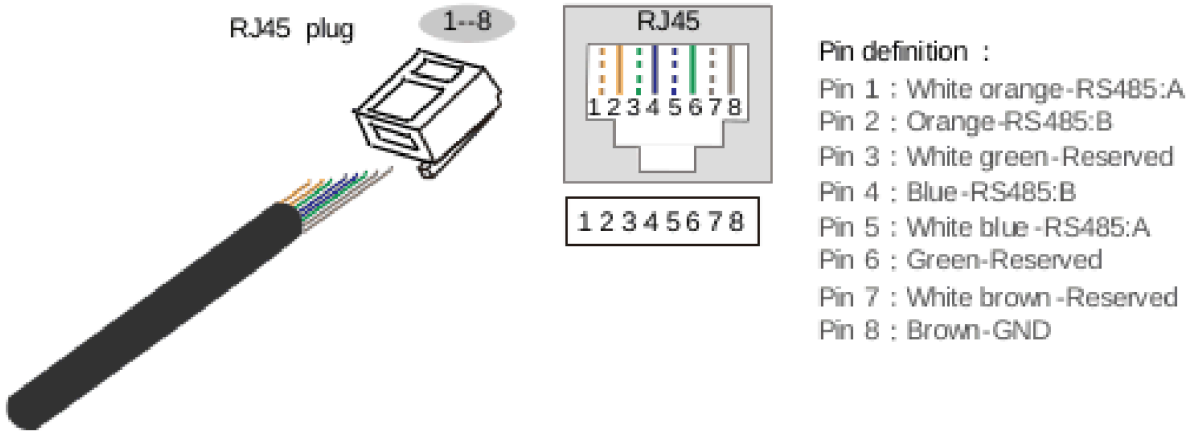

FIGURE 2-15 Pin definition of RS485 port

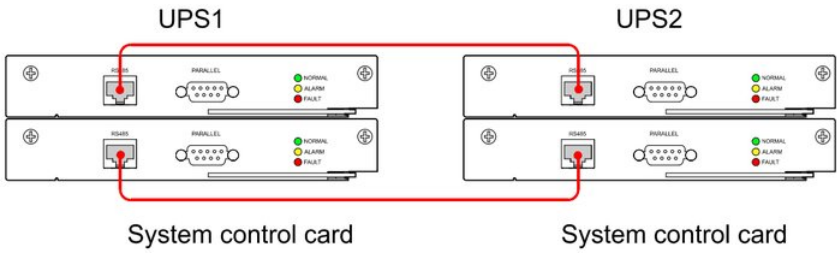

FIGURE 2-16 RS485 port connection (two UPSs)

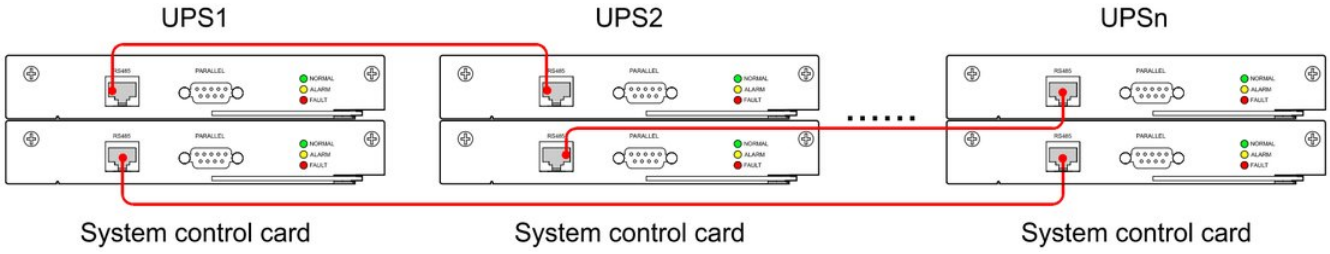

FIGURE 2-17 RS485 port connection (multiple UPSs)

SYSTEM MONITORING CARD

The system monitoring card is a communication transfer module for system monitoring, providing external communication ports, dry contact control, battery temperature sampling and other functions. The system monitoring card panel includes one MODBUS port, one RS232 port, one EPO1 port, four input dry contact signal ports, one battery temperature collection port, one EPO2 port, three output dry contact signal ports, and one HMI port.

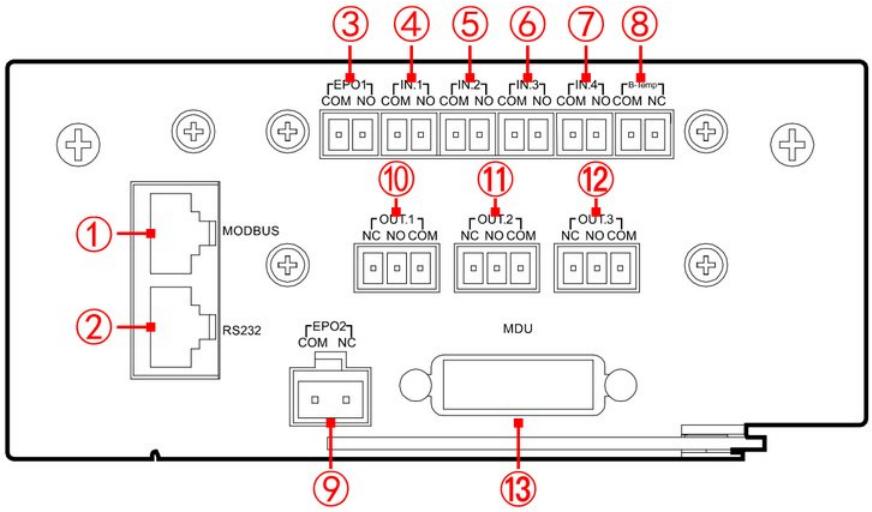

FIGURE 2-18 Appearance

TABLE 2-10 System monitoring card description

No.	Mark ple	Name	Description
	MODBUS -	MODBUS port	Used for MODBUS serial communication to realize the MODBUS communication function with the upper computer.
	RS232 -	RS232 port	Used for RS232 serial communication to realize the communication function of the external SNMP card.
	NO NO EPO1 COM COM	24V Detection External EPO normally open input port Enhanced insulated ground	When NO and COM short- circuit, the signal is effective. The signal is preset and isn't settable.
	NO NO IN.1 COM COM IN.2 NO	24V Detection External switch normally open input port Enhanced insulated ground External switch normally open input port	• When NO and COM short-circuit, the signal is effective. • The four IN ports can be set according to user requirements in

No.	Mark		Principle	Name	Description
		COM		Enhanced insulated ground	the ten dry contact definitions in Table 2-11.
	IN.3	NO		External switch normally open input port	
		COM		Enhanced insulated ground	
	IN.4	NO		External switch normally open input port	
		COM		Enhanced insulated ground	
	B-Temp	NC	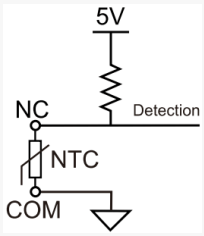	Battery temperature sensor (resistor) input	External temperature sampling wire. The signal is preset and isn't settable.
		COM		Enhanced insulated ground	
	EPO2	NC	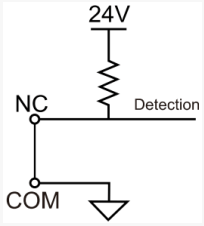	External EPO normally closed input port	Trigger EPO2 operation: • Short-circuit the CN8 of the system monitoring card with a 2P short cap, as shown in Figure 2-19. • Short-circuit NC and COM to make the system work normally. (If not operated, the touch screen displays "EPO abnormal" alarm.) • Disconnect NC and COM, the signal is effective. The signal is preset and isn't
		COM		Enhanced insulated ground	

No. rk		Pr	Name	Description
T.1	 NC NO COM NC NO COM NC NO COM	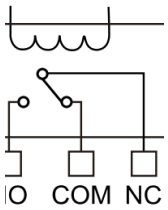	OUT.1 normally closed output port	settable. • The max. voltage and current of the external power are 30VDC/2A. • When the signal is effective, COM circuit NO, and disconnect from NC. • The three OUT ports can be set according to user requirements in the eighteen dry contact definitions in Table 2-12.
			OUT.1 normally open output port	
			Enhanced insulated ground	
T.2			OUT.2 normally closed port short-	
			OUT.2 normally open output port	
			Enhanced insulated ground	
T.3			OUT.3 normally closed output port	
			OUT.3 normally open output port	
			Enhanced insulated ground	
U	-		HMI port	Used for HMI communication.

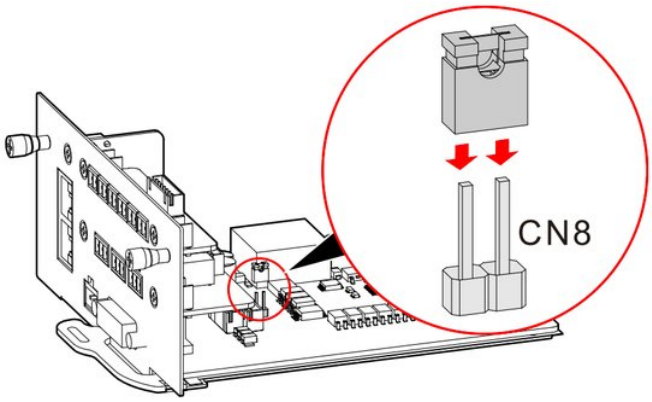

FIGURE 2-19 System monitoring card CN8 short circuit diagram

TABLE 2-11 Input dry contact definition

No.	Dry contact definition	Description
1	Battery abnormal	When a battery abnormal signal is received, the UPS alarms and records the event and the charging function is turned off.
2	Battery grounding abnormal	Grounding abnormal signal
3	Battery switch off	Battery switch auxiliary contact
4	Bypass switch off	Bypass switch auxiliary contact
5	Generator mode	Generator start signal, UPS records this event.
6	SPD abnormal	Input SPD abnormal, UPS records this event.
7	Maintenance bypass open	Maintenance bypass open. The current passes through the maintenance bypass circuit.
8	Mains switch off	Mains switch auxiliary contact
9	Environment smog abnormal	When the smog sensor detects abnormality, UPS records this event.
10	Strip light switch off	Strip light off signal

TABLE 2-12 Output dry contact definition

No.	Dry contact definition	Illustration
1	Inverter mode	When UPS is in inverter output status, the dry contact is ON
2	Bypass mode	When UPS is in bypass output status, the dry contact is ON
3	Battery trip	When the battery trips, the dry contact is ON
4	Battery mode	When UPS is in battery output status, the dry contact is ON
5	Battery undervoltage alarm	When battery discharges to undervoltage alarm, the dry contact is ON
6	Battery undervoltage protection	When battery discharges to the undervoltage protection status, the dry contact is ON
7	Output overload	When UPS is in the overload status, this dry contact is ON.
8	UPS abnormal	When UPS is in the abnormal status, this dry contact is ON.
9	Bypass abnormal	When bypass is abnormal or cannot be traced, this dry contact is ON.
10	Mains abnormal	When mains is abnormal, this dry contact is ON.
11	Start generator	When generator starts, this dry contact is ON.
12	ECO mode	When UPS is in the ECO output status, this dry contact is ON.
13	Inverter abnormal	When UPS inverter is abnormal, this dry contact is ON.
14	Single UPS bypass backfeeding	When the UPS detects bypass current backfeeding, this dry contact is ON.
15	Parallel system bypass backfeeding	When the UPS detects bypass current backfeeding in parallel mode, this dry contact is ON.
16	UPS ON	When UPS is in ON status, this dry contact is ON.
17	Fan abnormal	When UPS fan is abnormal, this dry contact is ON.
18	UPS alarm	When UPS has an alarm, this dry contact is ON.

2.5 Working Principles and Modes

2.5.1 Working Principle

The UPS is an online product that uses modular technology, making it easy to maintain and expand. Module adopts smart control. Power module consists of a rectifier, an inverter and a DC/DC converter, which converts the input into pure, high-quality sine wave output through high-frequency switching technology.

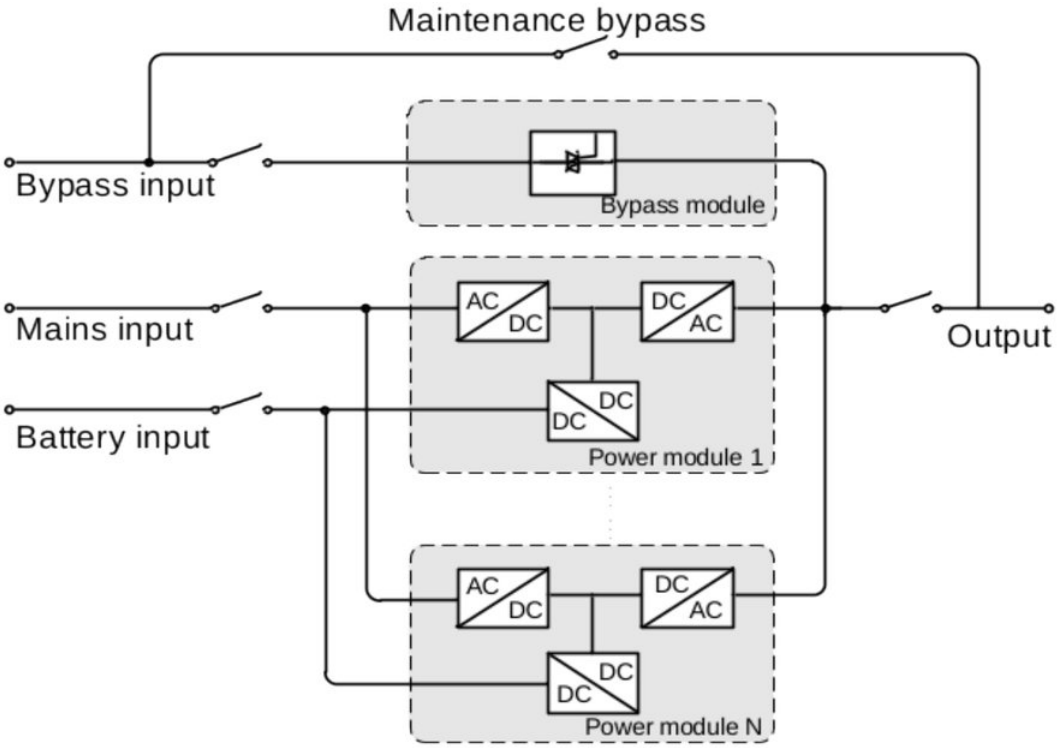

FIGURE 2-20 Working principle diagram

2.5.2 Working Modes

HOW IT WORKS **Operating modes at a glance**

Normal (online) mode

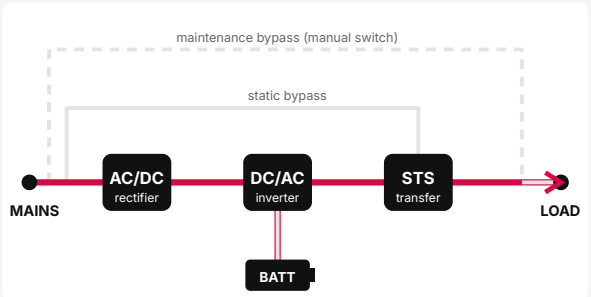

Mains present: the rectifier and the inverter supply the load with regulated power; the battery is kept charged.

Battery mode

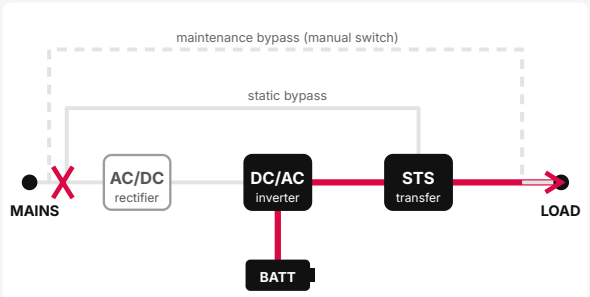

Mains outside its limits or missing: the battery feeds the inverter, with no break for the load.

Bypass mode

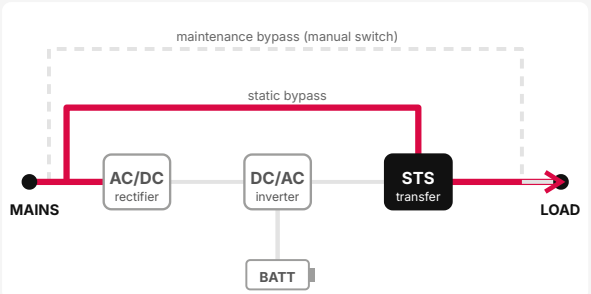

Overload, fault or inverter off: the load is supplied from the mains through the static bypass.

ECO mode

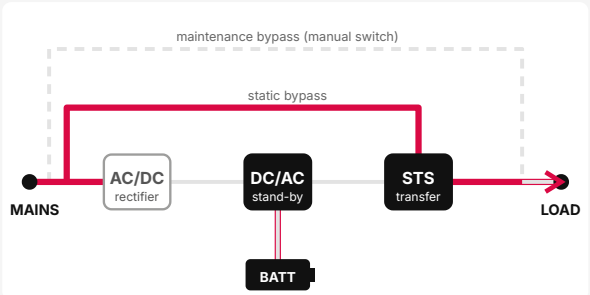

Mains inside the ECO window: the load runs on the bypass for the highest efficiency; the inverter takes over if the mains goes out of range.

Maintenance bypass

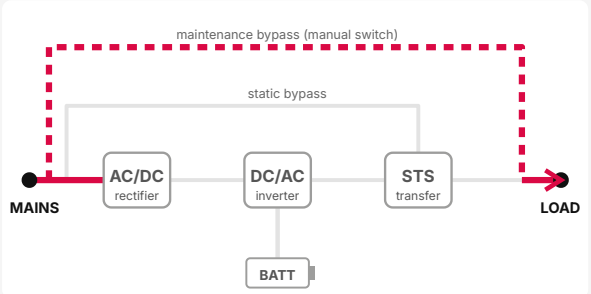

For service: the load is fed from the mains by the manual switch and the UPS can be switched off. Hazardous voltage stays on the terminals.

power flow working idle

MAINS MODE

The mains input is converted from AC to DC voltage by the rectifier, and then from DC to AC output by the inverter. After the two-stage conversion, the output voltage has improved accuracy and quality, which can prevent input harmonics, burrs, voltage transients and other interference from affecting the load. At the same time, the rectified bus charges the battery through the DC/DC converter.

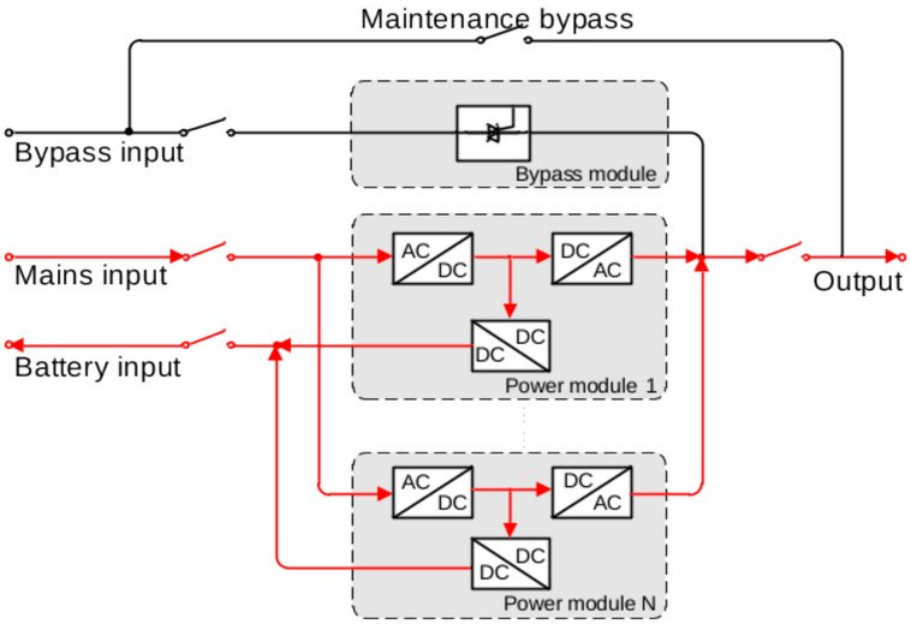

FIGURE 2-21 Mains mode

BATTERY MODE

When the AC input voltage or frequency of the rectifier becomes abnormal, the UPS switches to battery mode. The power modules draw energy from the battery, and the battery input is boosted by a DC/DC converter, then converted into AC voltage by the inverter for output. If the mains power returns to normal before the battery discharge is terminated, the rectifier switches back to mains input and simultaneously charges the battery. During the transition between grid power and battery power, the inverter output remains uninterrupted without any power loss. However, if the mains power fails to return to normal and the battery energy is nearly depleted, the UPS will trigger an audible and visual alarm, halt the inverter operation at the battery discharge lower limit, and emit a continuous warning beep. At this point, there is a risk of power loss to the user's load.

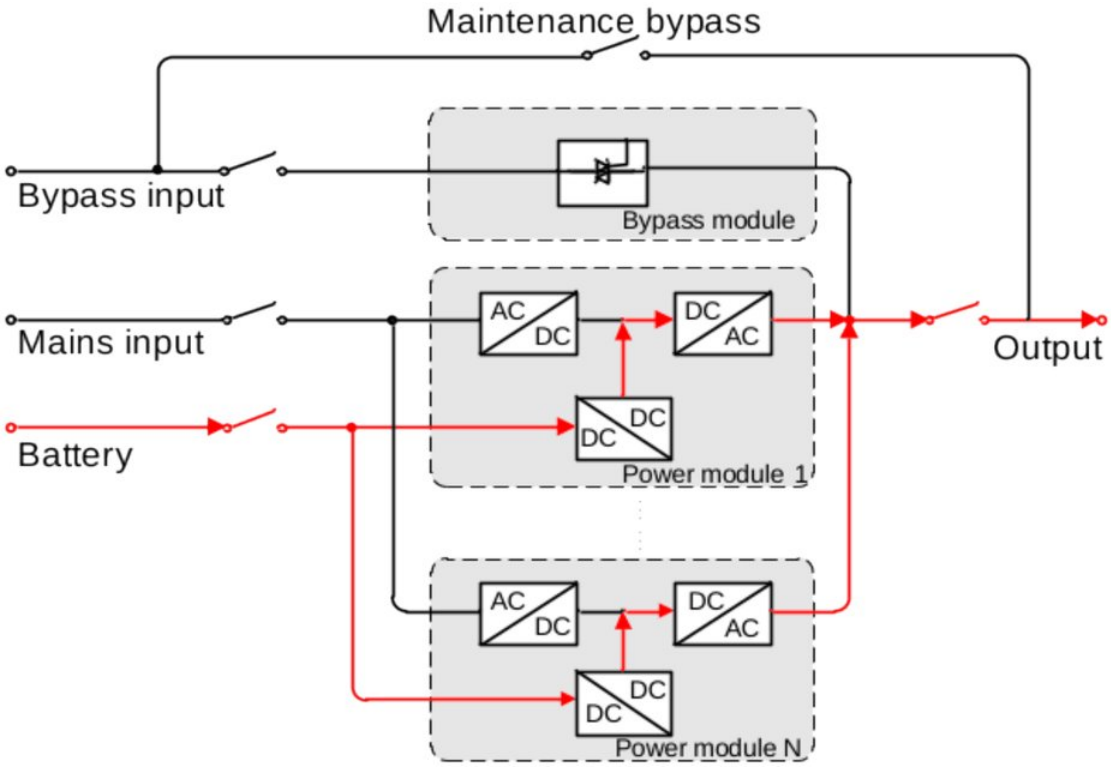

FIGURE 2-22 Battery mode

MAINS AND BATTERY SOURCE-SHARE MODE

When the mains input voltage is too low to support stable load operation, UPS automatically enters the mains and battery source-share mode. The mains and battery provide energy for power modules at the same time. Before the battery discharges completely, if the mains return to normal, UPS will switch to the mains mode again and charge the battery. If the mains does not return to normal and battery energy is about to run out, UPS sends a sound & light alarm, stops the inverter at the lower limit of battery discharge, and long beeps to alarm. In this case, the load may be powered down.

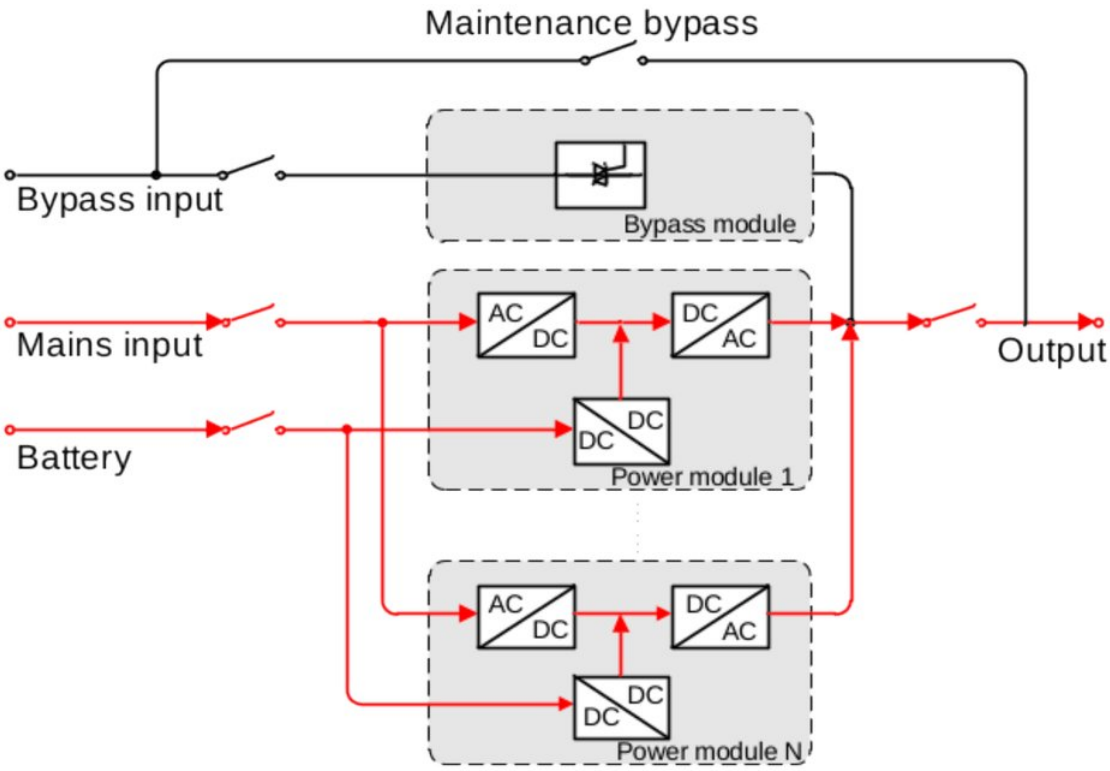

FIGURE 2-23 Mains and battery source-share mode

BYPASS MODE

When the system encounters abnormal conditions, such as high temperature, short circuit, abnormal output voltage or overload, and these conditions exceed the tolerable range of the inverter, the inverter automatically shuts down to prevent damage. If the input remains normal during this time, the bypass module will transfer the load power supply to the bypass power supply. At the same time, the rectifier will continue to operate normally and charge the battery via the DC/DC converter. During the bypass power supply, if the fault or overload is removed, the UPS resume inversion and switch back to inverter output. In bypass mode, the load power supply quality is not protected by UPS and may be affected by power failure, abnormal mains voltage, and abnormal input frequency.

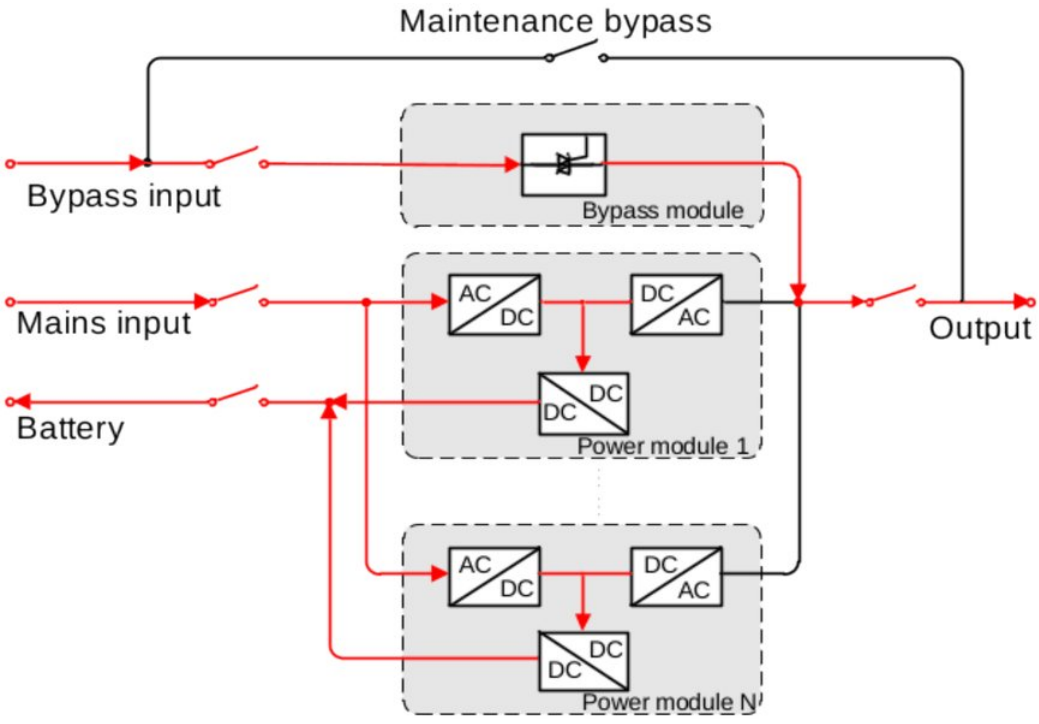

FIGURE 2-24 Bypass mode

ECO MODE

In ECO mode, when the AC input is normal, the UPS supplies power to the loads through the static bypass. If the AC input is abnormal, the UPS switches to inverter output mode. ECO mode can be manually configured via the touchscreen. When the bypass source voltage and frequency are within the ECO range, the bypass static switch conducts, allowing power to be supplied via bypass while the inverter remains in standby mode. If the bypass source voltage or frequency falls outside the ECO range, the load will switch from bypass to inverter output. Regardless of whether the power is supplied by the bypass or the inverter, the rectifier remains active and continues to charge the battery through the DC/DC converter. ECO mode ensures reliable power supply, improves efficiency, and saves energy, thereby reducing costs.

2.6 Optional Components

TABLE 2-13 Optional components list

No.	Name	Model	No.	Name	Model
1	SNMP card	-	7	Bypass anti-backfeed kit	-
2	Dry contact expansion card	-	8	Battery grounding detection kit	-
3	BMS expansion card	-	9	Side wiring cabinet	-
4	Parallel/BSC kit	7 m / 10 m / 15 m	10	Single power source kit	-
5	Battery temperature compensation kit	-	11	Distribution cabinet	-
6	Surge protection facility	SPD	12	Top air outlet kit	-

2.6.1 SNMP Card

The SNMP card is used to remotely manage the UPS via the network. For the installation of SNMP card, please refer to "**3.6.1 SNMP Card Installation**".

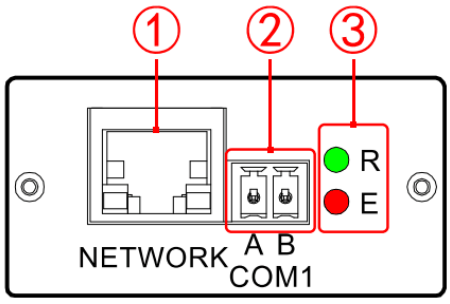

FIGURE 2-25 Appearance

TABLE 2-14 SNMP card description

No.	Mark		Name	Color	Description
	NETWORK		Ethernet port	-	Used for Ethernet serial communication to realize the remote monitoring communication function. The Ethernet port is connected by an RJ45 plug.
	COM1	A B	COM1 port	-	Connect with humiture module (RS485).
	R		Run indicator	Green	• R is on, E is on: System starts. • R flashes, E is in any status: System is running. • R is on/off, E is in any status: System crashes, keep the last status. E ▮ R is in any status, E is off: System has no • R is in any status, R flashes: System has an alarm.
				Red	

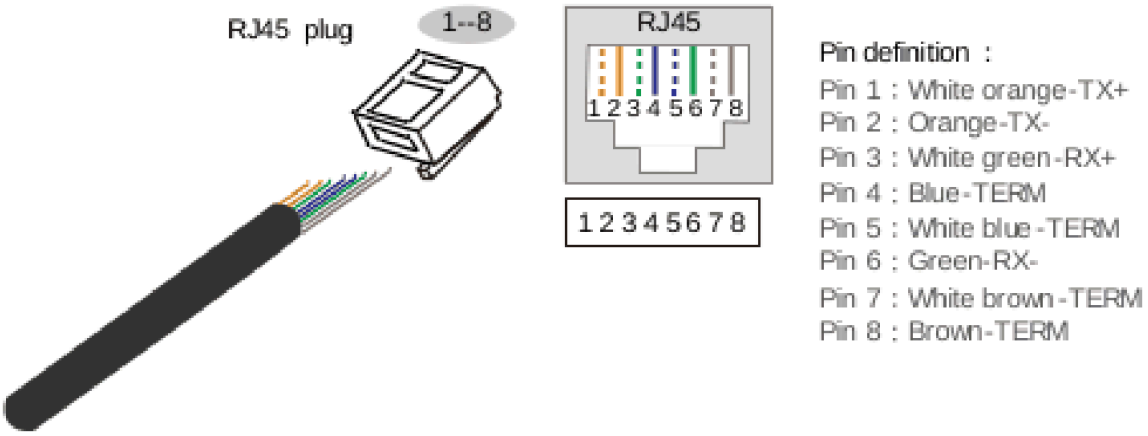

FIGURE 2-26 Pin definition of Ethernet port

SNMP CARD SOFTWARE

NOTE

- It is suitable but not only for the following browsers (The old version operating system may not be good in compatibility): Chrome56+ browser, IE11+ browser. The login interface is different in different browser.
- The monitoring software and its user manual are available from AEC technical support (service@aecups.com); have the UPS serial number (S/N) ready.

CAUTION

Please ensure that the setting IP address is in the same network segment with user's computer IP address.

After the SNMP card is installed and connected, configure the software in the following order.

PROCEDURE

1. Open a browser and enter the IP address of the SNMP card (default IP: 192.168.0.100).

NOTE

If the IP address of the SNMP card has been changed, or if several SNMP cards are used, the IP addresses can be found with the network discovery tool supplied by AEC technical support.

2. Enter the user name and password in the login page and click "Login" to enter the monitoring page.

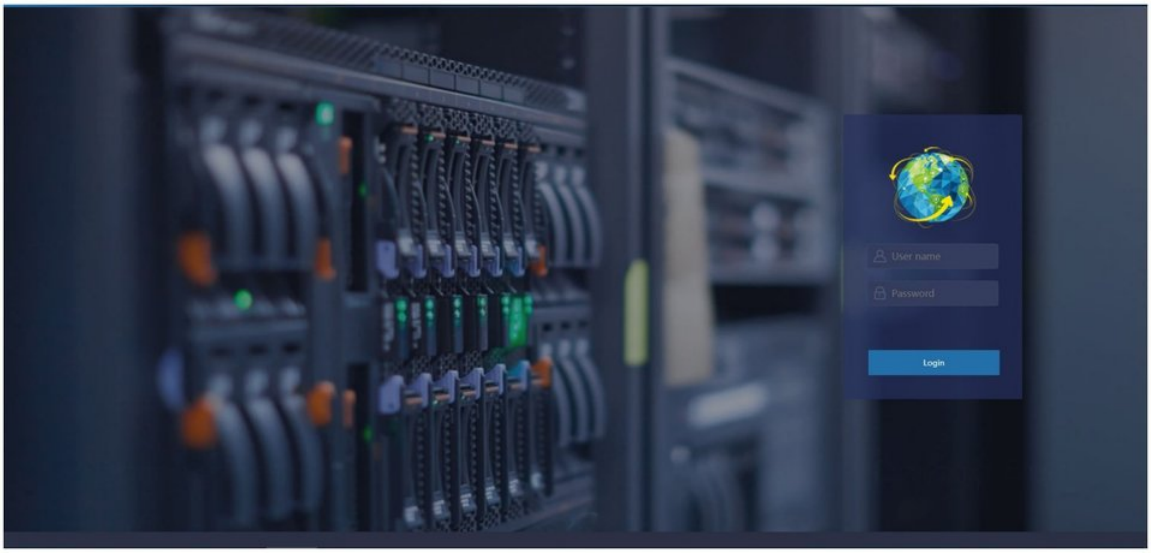

FIGURE 2-27 Login page

> **NOTE**
> Default administrator user name is admin; the default password is given in the AEC SNMP card manual.

2.6.2 Dry Contact Expansion Card

The dry contact expansion card is used for signal acquisition and detection. The dry contact expansion card includes three input dry contact signal ports and two output dry contact signal ports. The definitions of input and output dry contacts are as shown Table 2-11 and Table 2-12. For the installation of dry contact expansion card, please refer to "3.6.2 **Expansion Card Installation**".

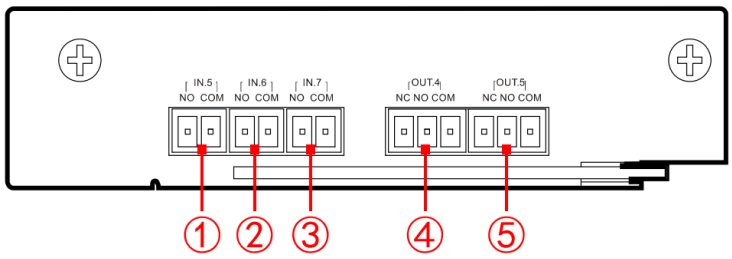

FIGURE 2-28 Appearance

TABLE 2-15 Description of dry contact expansion card

No.	Mark		Principle	Name	Description
	IN.5	NO		External switch normally open input port	When NO and COM short- circuit, the signal is effective. The signal is
		COM		Enhanced insulated	
			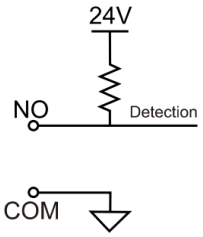	ground	settable.
	IN.6	NO		External switch normally open input port	
		COM		Enhanced insulated ground	
	IN.7	NO		External switch normally open input port	
		COM		Enhanced insulated ground	
	OUT.4	NC	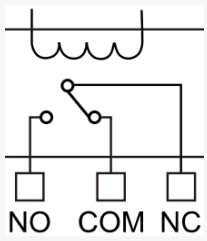	OUT.4 normally closed output port	• The max. voltage and current of the external power are 30VDC/2A. • When the signal is effective, COM short- circuit NO, and disconnect from NC. The signal is settable.
		COM		Enhanced insulated ground	
		NO		OUT.4 normally open output port	
	OUT.5	NC		OUT.5 normally closed output port	
		COM		Enhanced insulated ground	
		NO		OUT.5 normally open output port	

2.6.3 BMS Expansion Card

The BMS expansion card is mainly used for Li-battery communication. The BMS expansion card includes one BMS port, two input dry contact signal ports, and one output dry contact signal port. For the installation of BMS expansion card, please refer to "3.6.2 **Expansion Card Installation**".

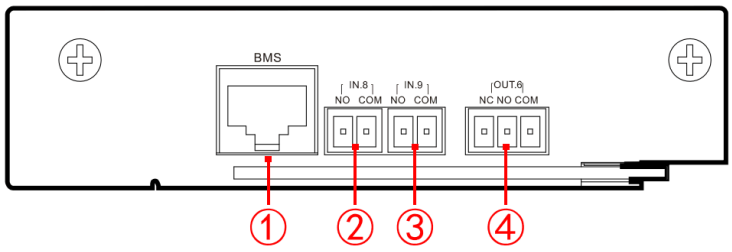

FIGURE 2-29 Appearance

TABLE 2-16 BMS expansion card illustration

No.	Mark ple			Name	Description
	BMS -			BMS port	Used to achieve communication function with the Li-battery BMS. The BMS port is connected by an RJ45 plug, and its pin definitions are shown in Figure 2-30.
	IN.8	 NO COM NO COM COM	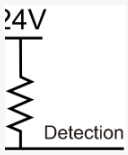	External switch normally open input port Enhanced insulated ground	When NO and COM short-circuit, the signal is effective. The signal can be set to prohibit charge.
	IN.9			External switch normally open input port Enhanced insulated ground	When NO and COM short-circuit, the signal is effective. The signal can be set to prohibit discharge.
	OUT.6	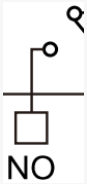 NO NC NO COM	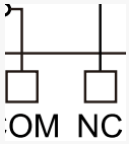	OUT.6 normally closed output port OUT.6 normally open output port Enhanced insulated ground	• The max. voltage and current of the external power are 30VDC/2A. • When the signal is effective, COM short-circuit NO, and disconnect from NC. The signal is reserved.

NOTE

If lithium batteries are used, contact AEC to ensure their reliable operation with the UPS.

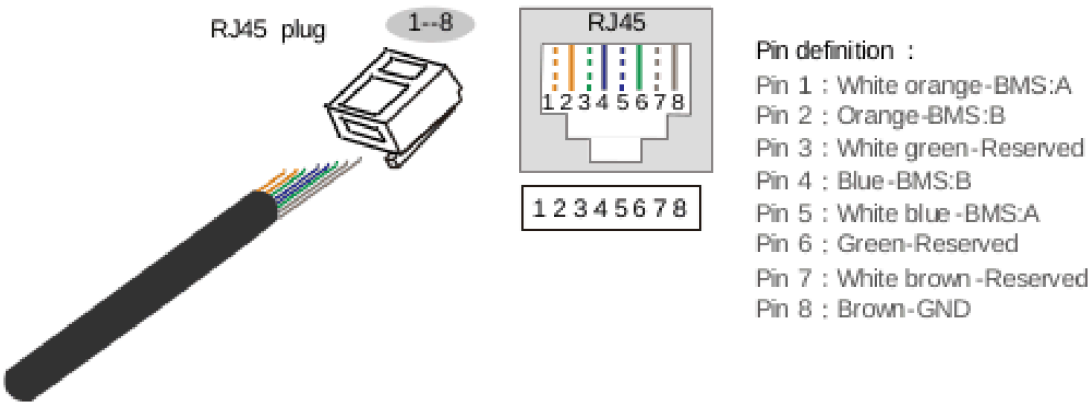

FIGURE 2-30 Pin definition of BMS port

2.6.4 Parallel/BSC Kit

Parallel/BSC kit is used to connect the parallel/BSC signal ports between cabinets in the parallel system. For the installation of parallel/BSC kit, please refer to "**3.6.3 Parallel/BSC Kit Installation**".



FIGURE 2-31 Appearance

- When multiple UPS are connected in parallel, it is necessary to use parallel wires to connect the parallel port of each UPS in a circular manner. Connecting N sets of UPS require N pieces of parallel wires to ensure that each UPS has at least two parallel wires connected, thereby improving the reliability of parallel operation.
- Synchronous BSC output dual-bus control is used in dual-bus systems to synchronize the output frequency and phase of each system in the dual-bus system, ensuring that the two buses can switch to each other.

> **NOTE**
> The UPS is supplied with a 7 m parallel cable. For a longer parallel cable, consult AEC.

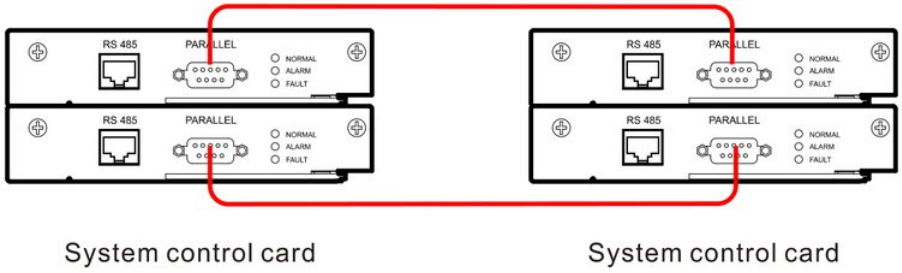

FIGURE 2-32 Parallel port connection (two UPSs)

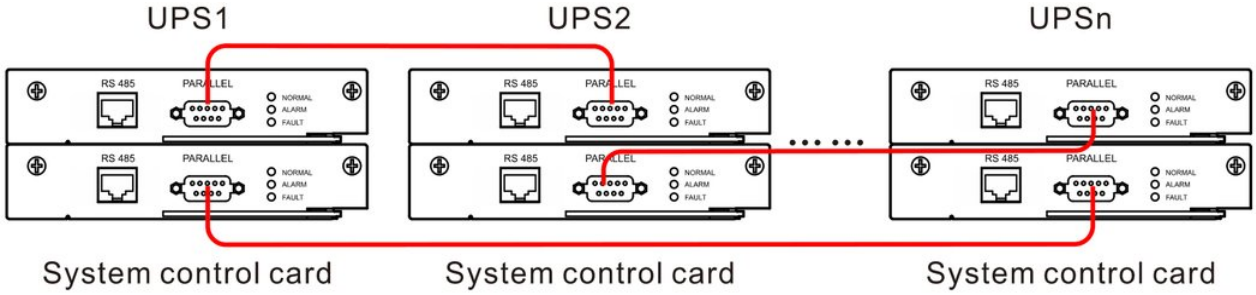

FIGURE 2-33 Parallel port connection (multiple UPSs)

2.6.5 Battery Temperature Compensation Kit

The battery temperature compensation kit is used to compensate for the battery temperature. This function is used to monitor the battery temperature and realize the temperature compensation of battery charging and discharging. For the installation of the battery temperature compensation kit, please refer to "3.6.4 **Battery Temperature Compensation Kit Installation**".

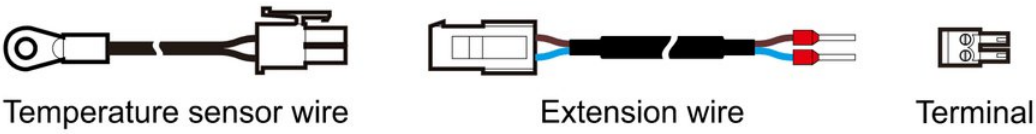

FIGURE 2-34 Appearance

NOTE

The temperature sensor wire must be fixed in the area where the battery temperature is high.

2.6.6 Surge Protection Facility

In lightning-prone areas, a multistage surge protection system must be installed at the incoming wire of the mains to ensure the safe operation of the devices. This series UPS can be equipped with a class C SPD and surge protection switch.

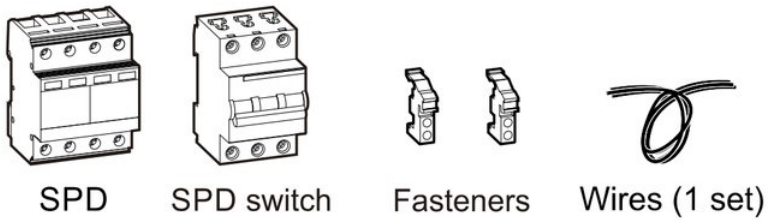

FIGURE 2-35 Appearance

NOTE

When the UPS is optionally equipped with the surge protection facility, it should be installed after the UPS is powered off for power cable safety consideration. Please specify this requirement in the order, so the surge protection facility can be installed at factory before delivery.

2.6.7 Bypass Anti-backfeed kit Kit

The bypass anti-backfeed kit is used to detect abnormal bypass SCR during UPS inverter operation. When such an anomaly is detected, the kit controls the battery release PCB board's power signal via dry contact, causing the bypass breaker's trip unit to activate. This disconnects the bypass breaker, preventing the output voltage from backfeeding into the bypass. When customers require this feature, the bypass anti-backfeed kit can be added. The output power of this kit is 24VDC, and the voltage reversal can be controlled via dry contacts, meeting the on-site requirements for shunt trip and undervoltage trip power supply.

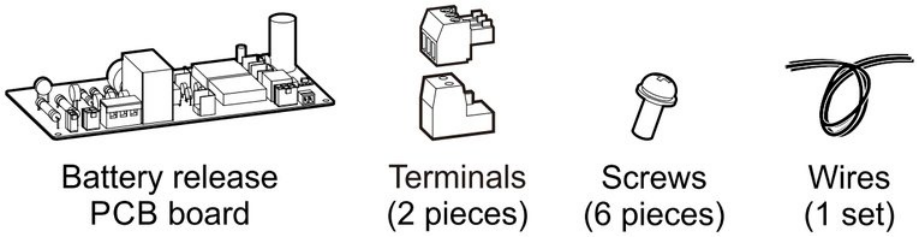

FIGURE 2-36 Appearance

NOTE

- If a bypass anti-backfeed kit is selected for the UPS, its installation involves high-voltage components. The on-site installation requires powering off the UPS. It is recommended to specify this requirement in the order so that the bypass anti-backfeed kit can be installed at the factory before shipping.
- The output of the bypass anti-backfeed kit is 24VDC, so it only meets the power supply requirements for the rated 24VDC battery release device.
- When the bypass anti-backfeed kit is pre-installed at the factory, only the wiring of the battery release device needs to be completed on-site by the customer.

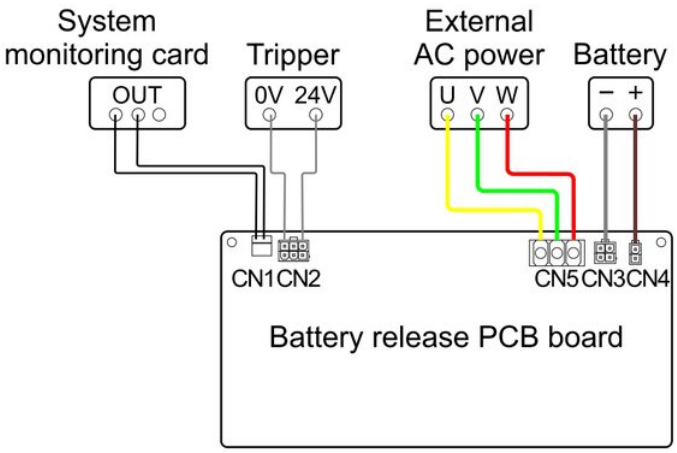

FIGURE 2-37 Battery release connection diagram

2.6.8 Battery Grounding Detection Kit

> **NOTE**
>
> The battery grounding detection kit is only applicable when the battery does not have a neutral wire. When the battery has a neutral wire, this kit cannot be connected or used.
>
> The battery grounding detection kit is only available as an option for IST6-600.

The battery grounding detection kit is used to detect whether there is a grounding fault in the battery. It is applicable to UPS systems where the grounding wire and neutral wire are not isolated, enabling online, non-contact battery-to-ground insulation detection, such as in applications like battery leakage. For the installation of battery grounding detection kit, please refer to “3.6.6 Battery Grounding Detection Kit Installation”.

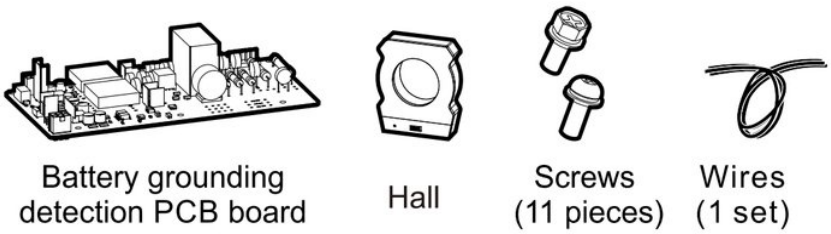

FIGURE 2-38 Appearance

> **NOTE**
>
> If a battery grounding detection kit is selected for the UPS, its installation involves high-voltage components. If the battery grounding detection kit is installed on-site, please power off the UPS and then perform the installation operation. It is recommended to specify this requirement in the order, and the battery grounding detection kit will be installed at the factory before shipping.

2.6.9 Side Wiring Cabinet

When the UPS requires bottom cable entry, a separate side wiring cabinet can be optionally installed to meet this requirement. For the installation of side wiring cabinet, please refer to "**3.6.5 Side Wiring Cabinet Installation**".

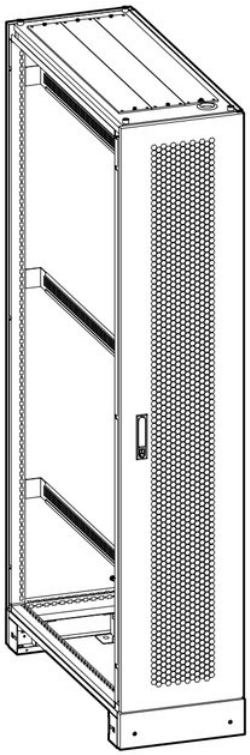

FIGURE 2-39 Appearance

2.6.10 Single Power Source Kit

Single power source kit is used to connect the mains input copper bar with bypass copper bar so that the mains input and bypass input of the UPS are supplied by the same power. For the installation of single power source kit, please refer to "**3.6.7 Single Power Source Kit Installation**".

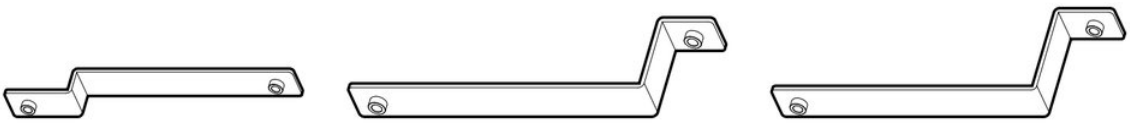

FIGURE 2-40 Appearance of IST6-600

> **NOTE**
> The single power source kits of IST6-600 are similar. The above figure uses IST6-600 as an example.

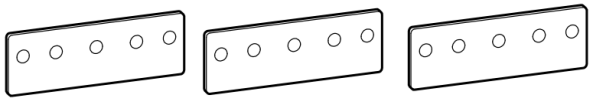

FIGURE 2-41 Appearance of IST6-800



FIGURE 2-42 Appearance of IST6-1000, IST6-1200

2.6.11 Distribution Cabinet

When the built-in distribution switches are required, the distribution cabinet can be optionally configured (the appearance is as shown in Figure 2-43). The standard distribution cabinet of IST6-800 is equipped with mains, bypass, output, and maintenance bypass switches. The standard distribution cabinet of IST6-1000 and IST6-1200 is equipped with mains, bypass, and output switches.

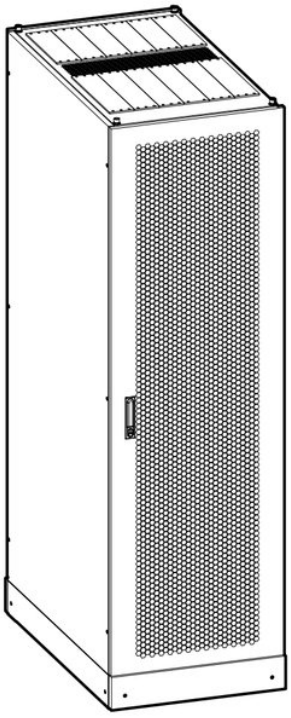

FIGURE 2-43 Appearance

> **NOTE**
>
> The distribution cabinet is only available as an option for IST6-800, IST6-1000, and IST6-1200. If a distribution cabinet is selected, it will be fully assembled with the UPS in the factory before shipment. For IST6-600, the mains switch, output switch, bypass switch and maintenance bypass switch can be configured according to customer needs.

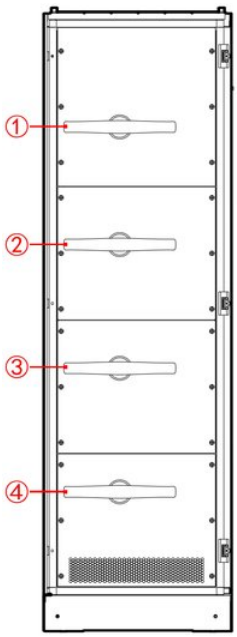

FIGURE 2-44 Distribution cabinet structure layout for IST6-800 (open front door)

TABLE 2-17 Description of the structure layout for IST6-800 distribution cabinet

No.	Name	No.	Name
	Mains switch		Maintenance bypass switch
	Bypass switch		Output switch

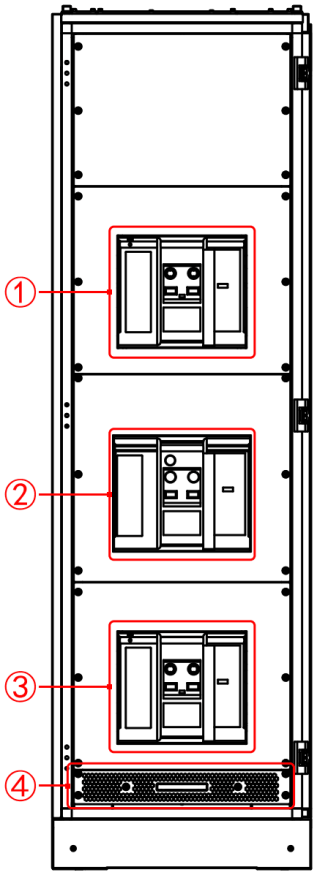

FIGURE 2-45 Distribution cabinet structure layout for IST6-1000, IST6-1200 (open front door)

TABLE 2-18 Description of the structure layout for IST6-1000, IST6-1200

No.	Name	No.	Name
	Bypass switch		Output switch
	Mains switch		Fan module

> **NOTE**
> The default configuration of the distribution cabinet is for separate input sources for the mains and bypass. If a single power source for both mains and bypass is required, contact AEC for the customised version.

2.6.12 Top Air Outlet Kit

When the UPS needs to discharge hot air from the top, the top air outlet kit is available.

> **NOTE**
> The top air outlet kit for IST6-600 (as shown in Figure 2-46) will be shipped as an accessory and needs to be installed on-site. For specific installation instructions, refer to "**3.6.8 Top Air Outlet Kit Installation**." If the IST6-800, IST6-1000, or IST6-1200 is selected with the top air outlet plate, it will be installed at the factory before shipping, and no on-site installation is required.

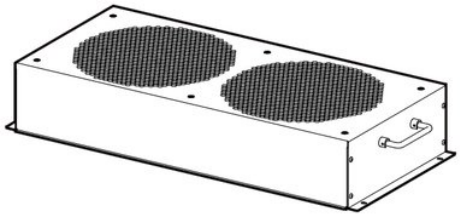

FIGURE 2-46 Appearance

2.7 Alarm Protection Function

Once UPS is abnormal, it will send sound & light alarm.

TABLE 2-19 Alarm protection function

Fault	Fault info	Protection status	Alarm status
Mains fault	Mains fault	Mains power supply is not allowed.	• Buzzer beeps slowly. • ⎓ rectifier indicator on the operation panel turns red. • " " mains icon on the touch screen turns red. • The yellow ambient lamp is on.
	Mains overvoltage		
	Mains undervoltage		
	Mains unbalance		
	Mains overfrequency		
	Mains underfrequency		
	Mains power down		
	Mains phase loss		
	Mains phase sequence abnormal		
	Large mains harmonic component		
	Mains drop		
	Mains PFC overload protection		
	Mains neutral wire missing		
	Large mains DC component		

TABLE 2-19 Alarm protection function *(continued)*

Fault	Fault info	Protection status	Alarm status
Battery fault	Battery fault	Battery power Charger red. supply is not allowed.	• Buzzer beeps rapidly. • battery indicator on the operation panel turns • " " battery icon on the touch screen turns red. • The yellow ambient lamp is on.
	Battery polarity reversed		
	Battery overvoltage		
	overcurrent		
	Battery circuit abnormal		
	Battery undervoltage protection		
	Battery overload		
Bypass fault	Bypass fault	output is not red. allowed.	• Buzzer beeps slowly. • bypass indicator on the operation panel turns • " " bypass icon on the touch screen turns red. • The yellow ambient lamp is on.
	Bypass overvoltage		
	Bypass undervoltage		
	Bypass unbalance		
	Bypass overfrequency		
	Bypass underfrequency		
	Bypass power down		
	Bypass phase loss		
	Bypass phase sequence abnormal		
	Large bypass harmonic component		
	ECO power down detection	ECO output is not allowed.	• Buzzer beeps slowly. • The yellow ambient lamp is on.
	ECO overvoltage		
	ECO undervoltage		
	ECO overfrequency		
	ECO underfrequency		

TABLE 2-19 Alarm protection function *(continued)*

Fault	Fault info	Protection status	Alarm status
Output fault	Inverter output fault	output is not red. allowed.	• Buzzer keeps beeping. • inverter indicator on the operation panel turns • " " output icon on the touch screen turns red. • The red ambient lamp is on.
	Output short circuit		
	Inverter overvoltage		
	Inverter undervoltage		
	Low output PF value		
	Large output current DC component		
	Output circuit abnormal	None	• Buzzer beeps slowly. • inverter indicator on the operation panel turns red. • " " output icon on the touch screen turns red. • The red ambient lamp is on.
System fault	System fault	None	• Buzzer keeps beeping. • The red ambient lamp is on.
	System EPO on	Bypass output and inverter output are not allowed.	
	System bypass fault	None	
	System inverter fault	None	
	EPO on	Bypass output and inverter output are not allowed.	

TABLE 2-19 Alarm protection function *(continued)*

Fault	Fault info	Protection status	Alarm status
	Bypass SCR abnormal	output is not red. allowed.	• Buzzer keeps beeping. • bypass indicator on the operation panel turns • " " bypass icon on the touch screen turns red. • The red ambient lamp is on.
	Bypass overload protection	Bypass output and inverter output are not allowed.	• Buzzer keeps beeping. • load indicator on the operation panel turns red. • " " output icon on the touch screen turns red. • The red ambient lamp is on.
	Inverter overload protection	Inverter output is not allowed.	
	Parallel wire abnormal	Inverter output is not allowed.	• Buzzer keeps beeping. • The red ambient lamp is on.
	Parallel system sovereignty fault	None	
	Maintenance bypass opened	Inverter output is not allowed.	
	System battery prohibit charge on	None	• Buzzer beeps rapidly. • battery indicator on the operation panel turns red. • " " battery icon on the touch screen turns red. • The red ambient lamp is on.
	System battery prohibit discharge on	None	
Cabinet fault	Cabinet fault Bypass overtemperature	None Judge whether to bypass output based on the bypass overtemperature setting	• Buzzer keeps beeping. • The red ambient lamp is on. • Buzzer keeps beeping. • bypass indicator on the operation panel turns red. • " " bypass icon on the touch screen turns red. • The red ambient lamp is on.
Inverter output overcurrent	None	• Buzzer keeps beeping. • The red ambient lamp is on.	
Rectifier fault self-lock	None		
Inverter fault self-lock	None		
Battery overload protection	None		
Battery discharge protection	None		
UPS fault	None		

TABLE 2-19 Alarm protection function *(continued)*

Fault	Fault info	Protection status	Alarm status
Cabinet prealarm	Cabinet prealarm	None	• Buzzer beeps rapidly. • The yellow ambient lamp is on.
	Cabinet overtemperature alarm	None	
	Battery high-temperature alarm	None	
	Battery low-temperature alarm	None	
	Battery undervoltage alarm	None	
	Backup time insufficient	None	
	Output overload alarm	None	• Buzzer beeps rapidly. • load indicator on the operation panel turns red. • " " output icon on the
			touch screen turns red. • The yellow ambient lamp is on.
	Output frequency beyond range	None	• Buzzer beeps rapidly. • The yellow ambient lamp is on.
	Bypass auxiliary power abnormal	None	
	Bypass overtemperature alarm	None	
	Some power module PFC abnormal	None	
	Battery auto-start when power on disabled	None	
Cabinet alarm	Cabinet fault	None	• Buzzer beeps slowly. • The yellow ambient lamp is on.
	Battery disconnected alarm	None	
	Auxiliary power abnormal	None	
	Bypass not installed	output is not red. allowed.	• Buzzer beeps slowly. • bypass indicator on the operation panel turns • " " bypass icon on the touch screen turns red. • The yellow ambient lamp is on.
	Parameter setting mismatch	None	• Buzzer beeps slowly. • The yellow ambient lamp is on.
	Battery parameter mismatch	None	

TABLE 2-19 Alarm protection function *(continued)*

Fault	Fault info	Protection status	Alarm status
	Module number inconsistent	None	
	Cabinet number inconsistent	None	
	System card n_not installed	None	
	System card n_Flash abnormal	None	
	System card n_card slot address repeat	None	
	System card n_ON/OFF status and primary card out of sync	None	
	Bypass output now	None	
	System card n_primary card and secondary card parameter out of sync	None	
	System card n_output status out of sync	None	
	Fan dedusting	None	
Power-on failure alarm	Power-on failure alarm	Static startup is not allowed to work.	• Buzzer beeps slowly. • The yellow ambient lamp is on.
	Reserved		
	Inverter output not possible: load too heavy		
	Waiting common inverter for unknown load		
	PFC software version inconsistent		
	Inverter software version inconsistent		
	CCM software version inconsistent		
	Module hardware version inconsistent		
	Key parameter mismatch		
	Parallel address conflict		
	Module serial version inconsistent		

TABLE 2-19 Alarm protection function *(continued)*

Fault	Fault info	Protection status	Alarm status
Component failure alarm	Component failure	None	• Buzzer beeps slowly. • The yellow ambient lamp is on.
	Bypass 1 NTC failure		
	Bypass 2 NTC failure		
	Cabinet NTC failure		
	System card NTC failure		
	Bypass fan abnormal		
	Cabinet fan abnormal		
	Parallel wire 1 alarm		
	Parallel wire 2 alarm		
	Bypass 1 not installed		
	Bypass 2 not installed		
	Monitoring card not installed		
	Bypass module offline	Bypass output is not allowed.	• Buzzer beeps slowly. •  bypass indicator on the operation panel turns
			red. • " " bypass icon on the touch screen turns red.
	Dry contact expansion card offline	None	• Buzzer beeps slowly. • The yellow ambient lamp is on.
	Bypass NTC failure		
Communication abnormal alarm	Communication abnormal	None	• Buzzer beeps rapidly. • The yellow ambient lamp is on.
	Sync CAN inside cabinet abnormal		
	Equalized current CAN inside cabinet abnormal		
	BMS communication fault		
	Display CAN inside cabinet abnormal		
	Sync CAN among cabinets abnormal		
	Equalized current CAN among cabinets abnormal		
	Inner SCI communication abnormal		

TABLE 2-19 Alarm protection function *(continued)*

Fault	Fault info	Protection status	Alarm status
Smart mode alarm	Smart mode alarm	None	• Buzzer beeps slowly. • The yellow ambient lamp is on.
	Generator mode on		
	Generator prohibit charge		
	Only a BSC system detected now		
	System current load exceeds the set safety load		
	Power module without redundancy		
	Power module redundancy insufficient		
	Cabinet without redundancy		
	Cabinet redundancy insufficient		
	System card without redundancy		
	Self-load switch abnormal		
	Self-load timeout alarm		
	Inverter and bypass out of sync		
Input dry contact status	Input dry contact alarm	None	• Buzzer beeps slowly. • The yellow ambient lamp is on.
	Battery abnormal		• Buzzer beeps rapidly. • battery indicator on the operation panel turns red. • " " battery icon on the touch screen turns red. • The yellow ambient lamp is on.
	Battery grounding abnormal		
	Battery switch off		
	Bypass switch off		• Buzzer beeps slowly. • bypass indicator on the operation panel turns red. • " " bypass icon on the

TABLE 2-19 Alarm protection function *(continued)*

Fault	Fault info	Protection status	Alarm status
		Battery red. Maintenance slowly.	touch screen turns red. • The yellow ambient lamp is on.
	Output switch off		• Buzzer beeps slowly. • The yellow ambient lamp is on.
	prohibit discharge on		• Buzzer beeps rapidly. • battery indicator on the operation panel turns • " " battery icon on the touch screen turns red. • The yellow ambient lamp is on.
	Battery prohibit charge on		• Buzzer beeps rapidly. • battery indicator on the operation panel turns red. • " " battery icon on the touch screen turns red. • The yellow ambient lamp is on.
	Generator mode		• Buzzer beeps • The yellow ambient lamp is on.
	SPD abnormal		
	bypass closed		
	Environment smog abnormal		
	Mains abnormal		
Offline alarm	Power module 1 offline	None	• Buzzer beeps slowly.

TABLE 2-19 Alarm protection function *(continued)*

Fault	Fault info	Protection status	Alarm status
status	Power module 2 offline		• The yellow ambient lamp is on.
	Power module 3 offline		
	Power module 4 offline		
	Power module 5 offline		
	Power module 6 offline		
	Power module 7 offline		
	Power module 8 offline		
	Power module 9 offline		
	Power module 10 offline		
	Power module 11 offline		
	Power module 12 offline		
	Power module 13 offline		
	Power module 14 offline		
	Power module 15 offline		
	Power module 16 offline		
	Power module 17 offline		
	Power module 18 offline		
	Power module 19 offline		
	Power module 20 offline		
	Power module 21 offline		
	Power module 22 offline		
	Power module 23 offline		
	Power module 24 offline		
	Power module 25 offline		
	Power module 26 offline		
	Power module 27 offline		
	Power module 28 offline		
	Power module 29 offline		
	Power module 30 offline		
	System card 1 offline		
	System card 2 offline		

⚠ CAUTION

After the battery undervoltage protection is triggered, the UPS will restart and recharge battery pack when the mains supply is restored to normal.

03 Installation

CHAPTER 3

IN THIS CHAPTER

3.1 Installation Process
3.2 Unpacking and Checking
3.3 Installation Preparation
3.4 Transportation
3.5 UPS Installation
3.6 Optional Components Installation
3.7 Electrical Connection
3.8 Check the Installation

ROADMAP **From delivery to operation**

1. **Read the safety instructions** — Section 1.2
2. **Unpack and check the delivery** — Section 3.2
3. **Choose the place and prepare the cables and breakers** — Section 3.3
4. **Install and connect** — Section 2.6.9
5. **Start** — Section 4.1.2
6. **Check the display and the settings** — Section 5.7
7. **Look after** — Section 6.1

3.1 Installation Process

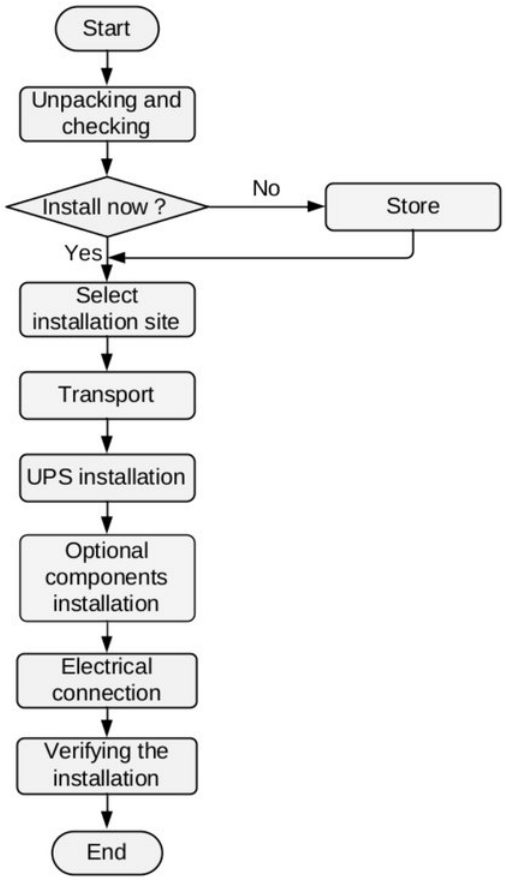

FIGURE 3-1 Installation process

3.2 Unpacking and Checking

> **NOTE**
>
> Due to the large volume of the packing box, it is necessary to choose the unpacking location in advance. In principle, the unpacking location should be as close as possible to the installation location.

3.2.1 Check Outer Packaging

The device has been fully tested and inspected before delivery, but damage may still occur during transportation. Please check the outer package for visible damage, such as holes, cracks or other signs that may cause internal damage, and check the device model before unpacking. If there is any abnormal packaging or device model discrepancy, do not unpack it and contact your dealer as soon as possible.

> **NOTE**
>
> - Device model and gravity center marking can be identified on the packing box.
> - When using a forklift truck to transport device, the forklift arm should align with the "Forklift arm position" icon on the packing box.
> - The outer packaging of the IST6-600 to IST6-1200 is different, but the labeling meaning is the same. The figure below is for illustration purposes only.

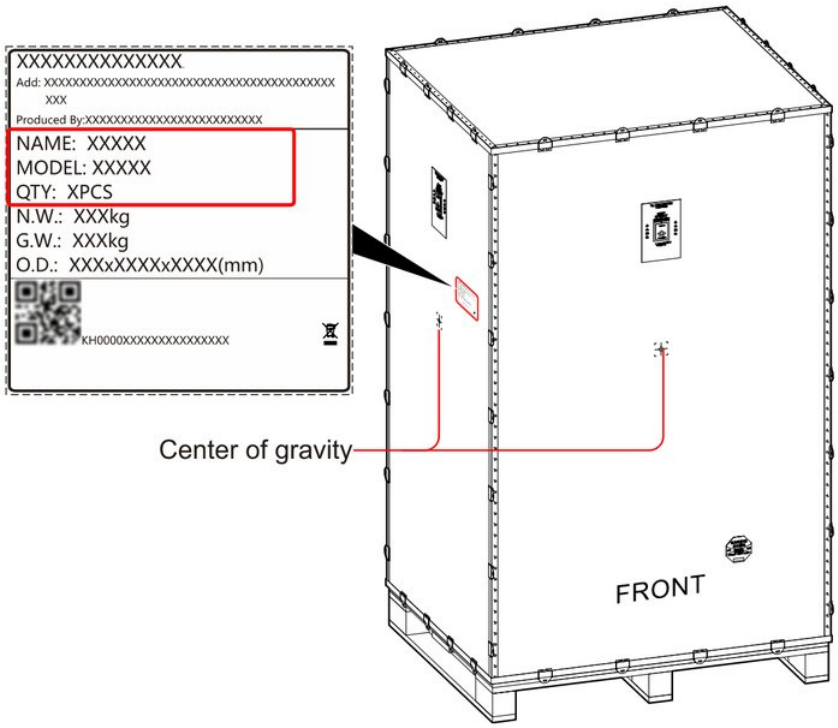
XXXXXXXXXXXXXX
Add: XXXXXXXXXXXXX

3.3 Installation Preparation

3.3.1 Installation Tool

Operators can adjust the tools used as needed based on the specific construction situation.

Protective tool			
			
Safety helmet	Goggles	Protective shoes	Reflective vest
	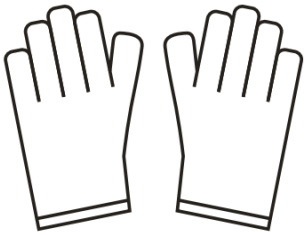	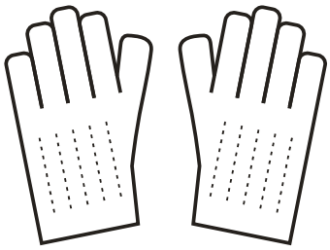	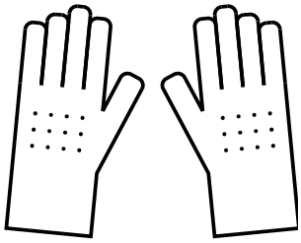
Dust mask	Protective gloves	ESD gloves	Insulation gloves
	-	-	-
Safety belt	-	-	-
Transportation			
			-
Lift truck	Manual forklift truck	Forklift truck	-
Device installation tool			
			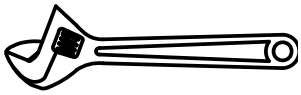
Flathead screwdriver	Phillips screwdriver	Torque socket wrench (including an extension socket)	Adjustable wrench

Protective tool			
	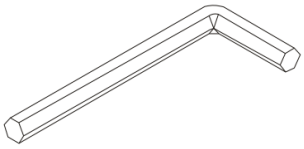	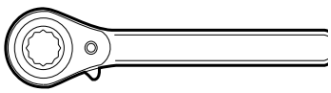	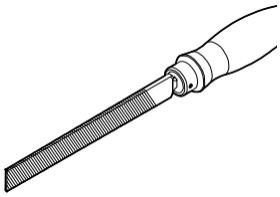
Torque wrench	Allen Wrench	Ratchet	File
	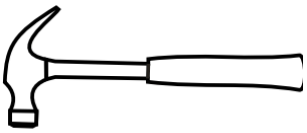	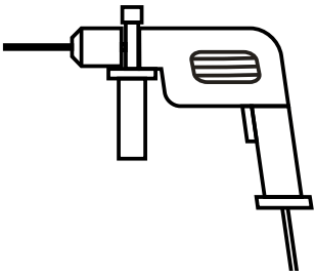	
Rubber hammer	Claw hammer	Hammer drill	Marker
	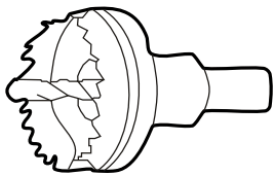	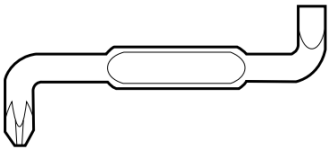	
Torque screwdriver	Hole opener	Elbow screwdriver	Telegraph herring
	-	-	-
Man ladder	-	-	-
Wire installation tool			
	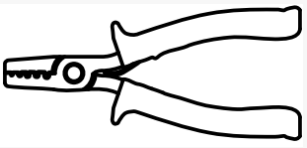		
Disgonal pilers	Wire stripper	Crimping pilers	Hydraulic pliers
	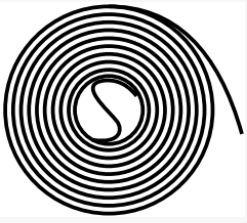	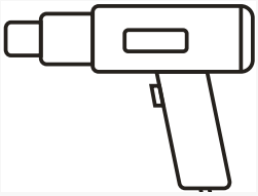	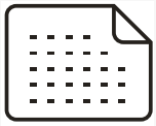
Electrician's knife	Heat shrink tubing	Heat gun	Label paper

Protective tool			
			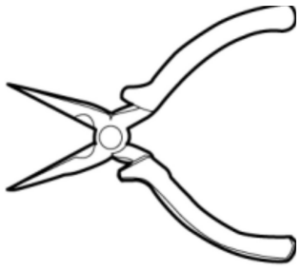
Cable tie	Wire cutting pliers	RJ45 crimping pliers	Sharp nose pliers
Pilers	Wire cutting pliers	Pipe Clamps	Hydraulic pliers
		-	-
Open wrench	Crimping pilers	-	-
Measuring tool			
Level straight ruler	Steel ruler	Angle ruler	Long tape measure
			
Measuring tape	Long roll steel rule	Height meter	Laser locator
Thermometer	Level	Phase sequence meter	Voltage resistance meter
	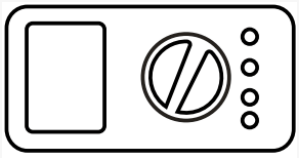	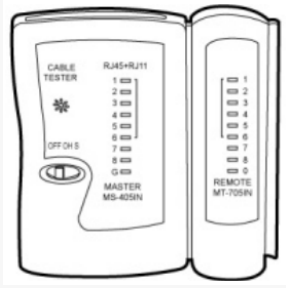	
Clamp ammeter	Multimeter	Network cable tester	Electric pen
Cleaning tool			

Protective tool			
	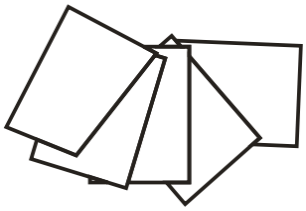	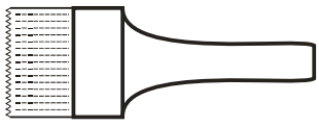	-
Vacuum cleaner	Cotton	Brush	-
Other tools			
	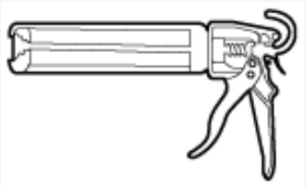	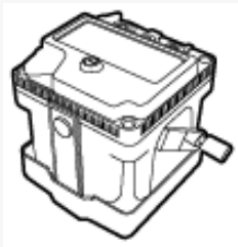	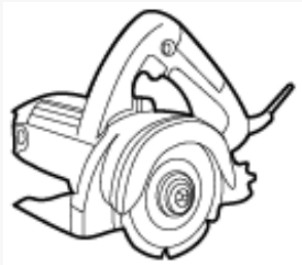
Cable coil	Sealant, sealant gun	Insulation shake meter	Small cutter
			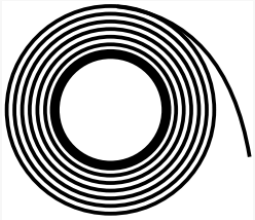
Paint brush	Flashlight	Sandpaper	Insulation tape

CAUTION

The installation tools must be with insulation protection to prevent electric shock.

3.3.2 Select Installation Site

INSTALLATION ENVIRONMENT REQUIREMENTS

The protection grade of the UPS is IP20, which is intended for in indoor installation. The installation environment requirements are as follows.

- Ambient temperature: 0 °C~ 40 °C.

NOTE

The optimal operating temperature range for the battery is 20°C to 30°C. Extended operation above 30°C will reduce the battery lifespan, while operation below 20°C will decrease the battery backup time.

- Relative humidity: 0%RH to 95%RH, non-condensing.
- Altitude: Not exceeding 2000m.

- Verticality: No vibration. The vertical inclination does not exceed 5º.
- Good ventilation around the device.
- Do not place the device near water sources, heat sources, or inflammable and explosive materials.
- Do not install the device in an environment with direct sunlight, dust, smog, volatile gases, corrosive substances, infrared, ultraviolet and other radiation, organic solvents, or high salt content.
- Do not install the device in a working environment with metal conductive dust.
- Do not install the device in areas with strong vibrations, strong noise sources, and strong electromagnetic fields.
- The installation ground is solid, there is no bad geology such as rubber soil, soft soil or easy subsidence. It is strictly prohibited to choose low-lying areas such as easy water and snow. The water level of the site should be higher than the highest water level in the history of area.
- Add a rodent-proof baffle at the door of the device room to prevent rodents and insects from entering.
- Power supply requirements:
  - Grounding preparation. The grounding terminal is ready, and the neutral-to-grounding voltage does not exceed 5V.
  - Before installing the UPS, please confirm that the provided AC input voltage and mains wires load capacity can meet the UPS requirements and consider whether the current carrying capacity has decreased due to wire aging.
  - The mains input voltage range of UPS is 80~280VAC. The mains capacity should be greater than the max. input power of UPS.
  - Breakers with leakage current protection shall not be selected.



FIGURE 3-3 Installation environment requirements

CAUTION

For safety reasons, please ensure that a three-pole disconnect switch is configured on the external DC distribution circuit.

INSTALLATION SPACE REQUIREMENTS

Reserve enough space around the UPS for operation and ventilation.

- When the UPS units are installed in parallel system, the space reserved around the entire combined system should meet the installation space requirements shown in Figure 3-4.
- When it is necessary to operate behind the UPS, reserve at least 800mm space.
- When the ambient temperature of UPS is high, increase the space behind UPS, and it is recommended to reserve more than 800mm space.

NOTE

The installation spacing requirements for the IST6-600 to IST6-1200 series UPS are similar. The figure above illustrates the IST6-600 as an example, and the detailed installation space requirements are shown in the table below.

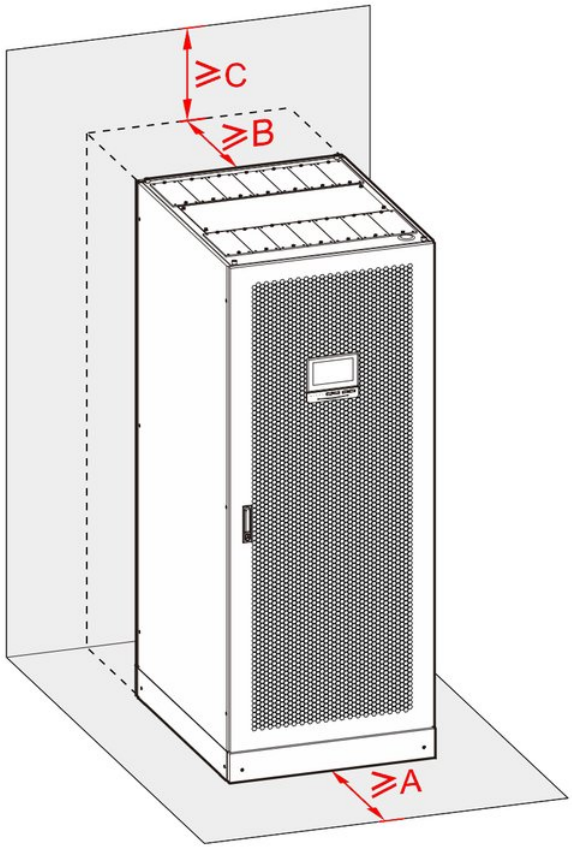

FIGURE 3-4 Installation space diagram

TABLE 3-1 Installation space requirement

Model	A (mm)	B (mm)	C (mm)
IST6-600	≥800	≥500	≥500 ≥650 (Configured with top air outlet kit)
IST6-800, IST6-1000, IST6-1200	≥800	≥800	≥500

⚠ CAUTION

Do not block the ventilation holes of the UPS, as this may affect its heat dissipation, leading to an increase in internal temperature and potentially shortening the UPS's service life.

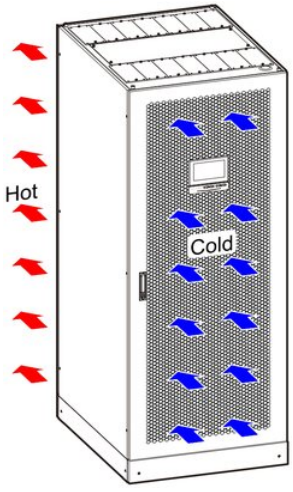

FIGURE 3-5 Heat dissipation diagram

NOTE

The standard configuration of the IST6-600 to IST6-1200 series UPS is front air inlet and rear air outlet, with the figure above illustrating the IST6-600 as an example. If the UPS is configured with a top air outlet kit, taking IST6-600 as an example, the corresponding heat dissipation diagram is shown below.

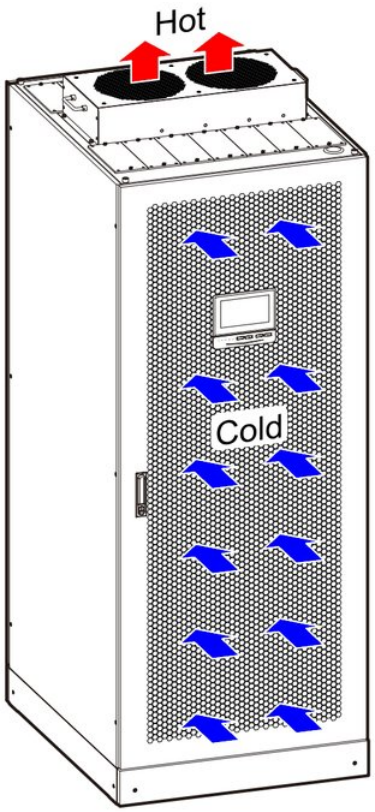

FIGURE 3-6 Heat dissipation diagram (top air outlet)

TABLE 3-2 Air flow illustration

Model	IST6-600	IST6-800	IST6-1000	IST6-1200
Min. air flow (m3/h)	6246	7140	7902	8785

3.4 Transportation

When moving devices, you can select an electric or manual forklift truck based on site conditions. If a forklift cannot be used on site, contact a professional to provide a reasonable transportation method.

CAUTION

- The device must be transported by trained professionals. Select an appropriate elevator based on the device weight, and arrange enough personnel to carry it. Transport personnel need to wear anti-smash shoes, gloves and other protective equipment. If the device weight exceeds the bearing capacity of the elevator, contact a professional to provide a reasonable transportation method.
- When forklifting the device, the gravity center of the device should be in the center of the two forks, keep the transportation process slow and smooth, and keep the balance between left and right. Before moving, please fasten the device to the forklift with a rope; When moving, it needs to be guarded by someone.
- To prevent the UPS from tipping over during transportation, when using an electric forklift or manual forklift, ensure that the forklift arms extend beyond the wooden pallet.
- During transportation, pay attention to the gravity center of the device to avoid impact or device falling.
- During transportation, keep the device vertical, with the device tilting angle α≤15°. Do not put down or lift it suddenly.

NOTE

Insert the forklift from the side of the device or use two forklifts to insert from the front of the device. The forklift handling requirements for the IST6-600 to IST6-1200 series UPS are the same.

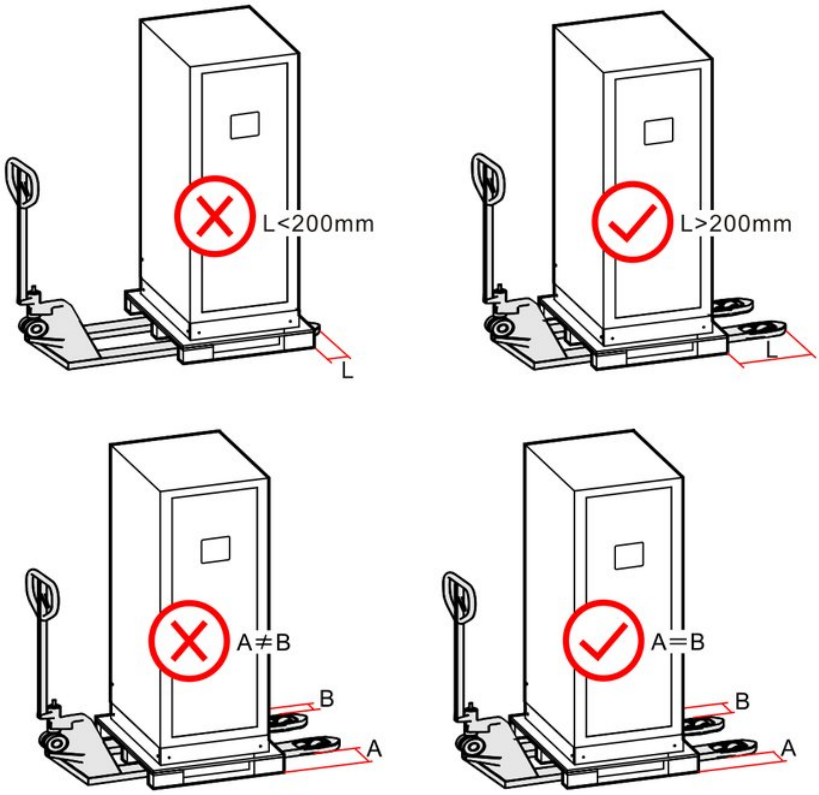

FIGURE 3-7 Forklift truck transportation diagram

3.5 UPS Installation

> **NOTE**
> The installation method for the IST6-600 to IST6-1200 series UPS is the same. Unless otherwise specified, this section uses the IST6-600 as an example for illustration.

3.5.1 Ground Installation

TABLE 3-3 Material source

No.	M	Source
1	M expansion bolts	Prepared by customer
2	B cover plates	Delivered with the UPS
3	M screws	Delivered with the UPS

> **CAUTION**
> If the bottom wiring is used (with a wiring side cabinet for bottom wiring as an option), prepare the wiring groove at the installation position in advance.

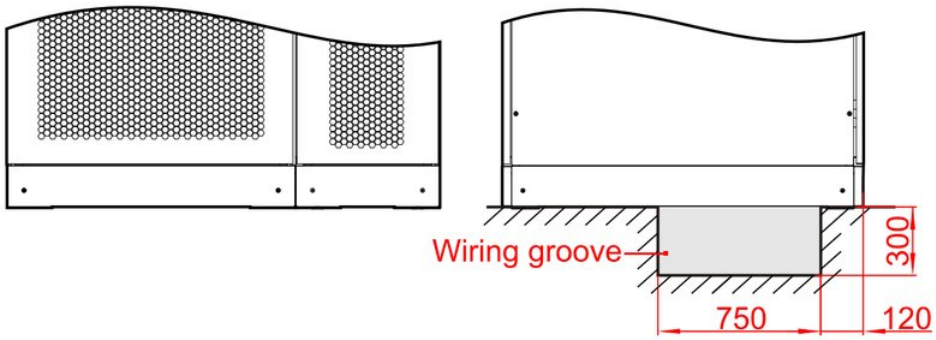

FIGURE 3-8 Wiring groove diagram

> **NOTE**
> The wiring groove dimensions are the same for all models in this series, the above diagram uses the IST6-600 as an example.

PROCEDURE

1. Select and plan the installation location according to the external size of the UPS and the installation space requirements.

> **NOTE**
> The distribution cabinet is optional. The width dimensions A and B are shown in Table 3-4. The front door of IST6-1000 and IST6-1200 is a double-leaf door. The figure above is for illustration purposes only; please refer to the actual delivery for details.

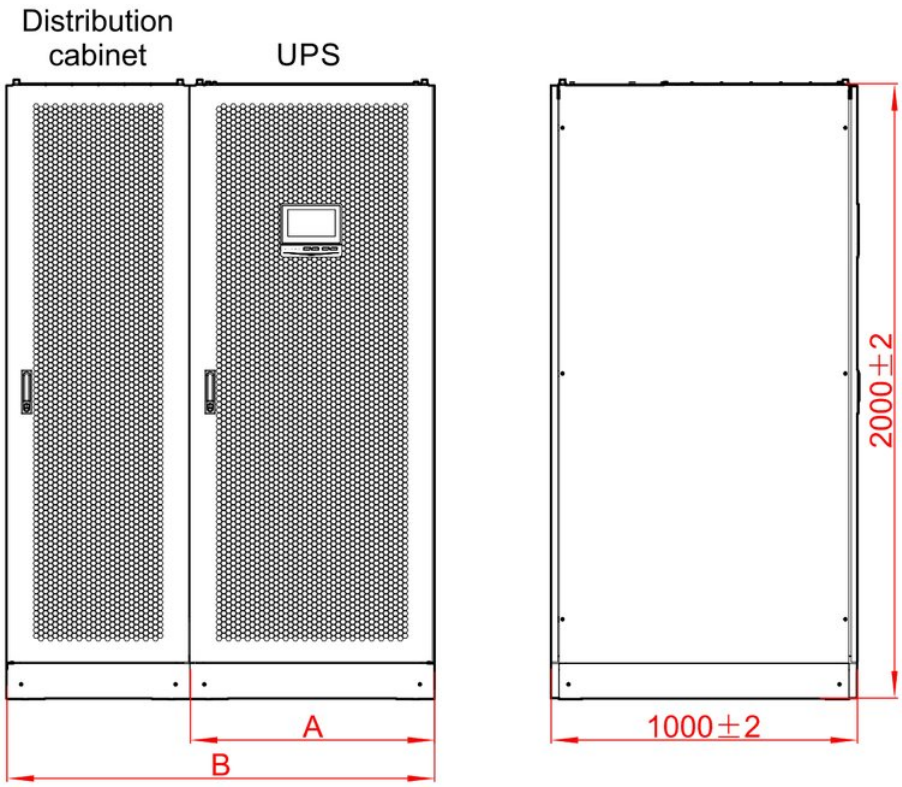

FIGURE 3-9 Size (unit: mm)

TABLE 3-4 Size illustration (unit: mm)

Model	Width of the UPS (A)	Width after configuring the distribution cabinet (B)
IST6-600	801	-
IST6-800	801	1400
IST6-1000, IST6-1200	1201	1800

2 Mark the positions of mounting holes on the ground.

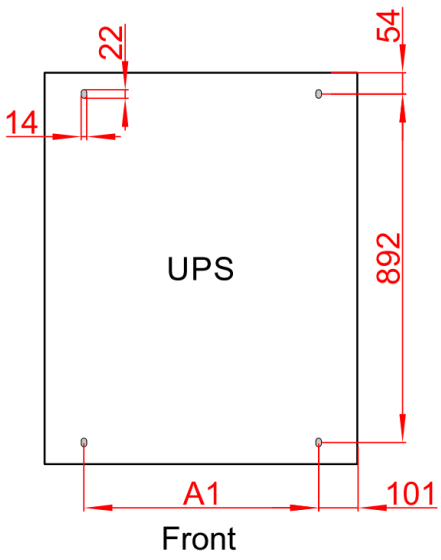

FIGURE 3-10 Mounting holes size (unit: mm)

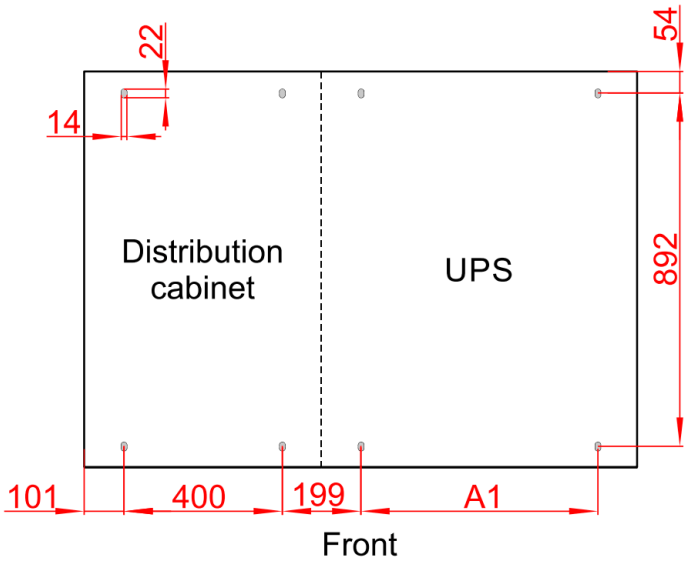

FIGURE 3-11 Mounting holes size (with the distribution cabinet) (unit: mm)

> **NOTE**
> When the optional distribution cabinet is selected, the distribution cabinet and UPS will be assembled at the factory before shipment. The figure above shows the base mounting holes size for the standalone UPS and the optional distribution cabinet. Due to varying widths for each model UPS, the A1 dimension may differ slightly (see Table 3-5), while the other hole dimensions remain unchanged.

TABLE 3-5 A1dimension illustration (unit: mm)

Model	A1
IST6-600, IST6-800	600
IST6-1000, IST6-1200	1000

3 Install the M12 expansion bolts.

1. Drill φ14mm hole on the ground by hammer drill.
2. Tighten the expansion bolt slightly and place it vertically in the hole. Tap the expansion bolt with a rubber hammer until the expansion pipe is fully inserted into the hole.
3. Tighten the expansion bolt.
4. Unscrew nut and remove flat washer and spring washer.

> **CAUTION**
> The depth of the expansion bolt insertion should be as deep as the expansion pipe is in the hole. The expansion pipe must not be higher than the ground. Otherwise, the UPS installation may be affected.

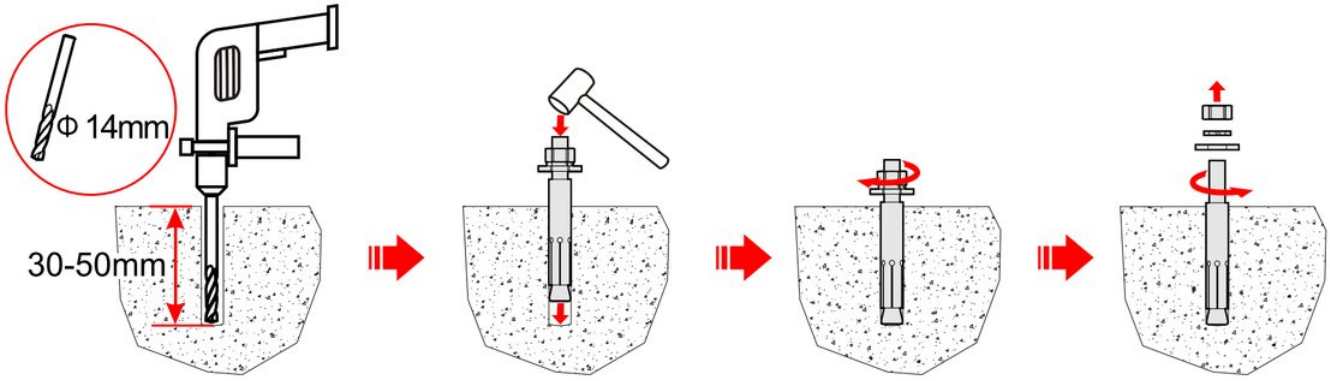

FIGURE 3-12 Install the expansion tubes

4 Unscrew the nuts connecting the UPS and the wooden tray, remove the nuts, screws, spring washers and flat washers.

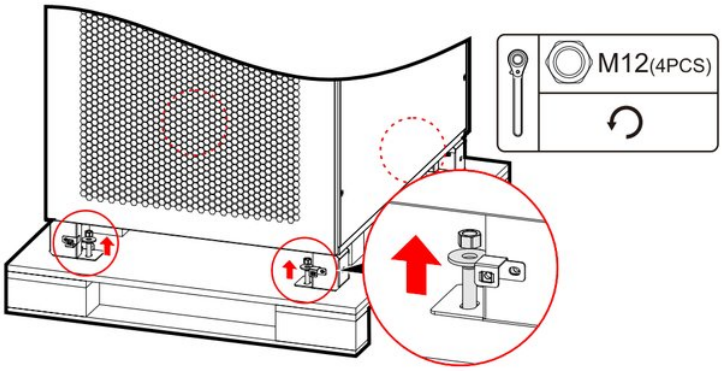

FIGURE 3-13 Remove the bolts connecting UPS and the wooden tray

5. Use a forklift to move the UPS from the wooden tray to the ground where the expansion bolts are installed. Place flat washers, spring washers, and nuts on the UPS to lock bolts.

> **NOTE**
> If the bottom wiring is used, ensure that UPS is installed above the wiring groove.

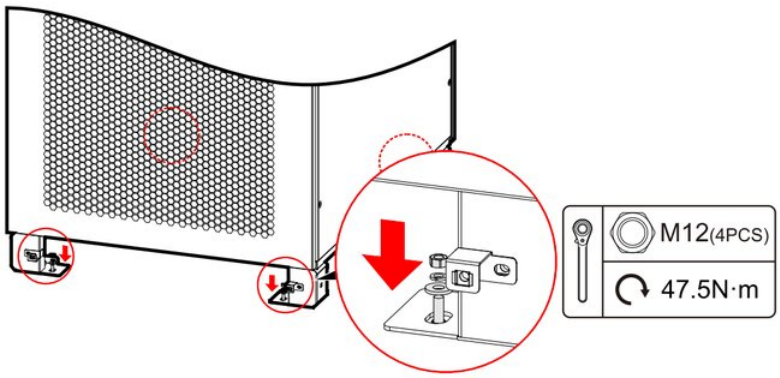

FIGURE 3-14 Fix UPS

6. Install the bottom cover plates of the UPS.

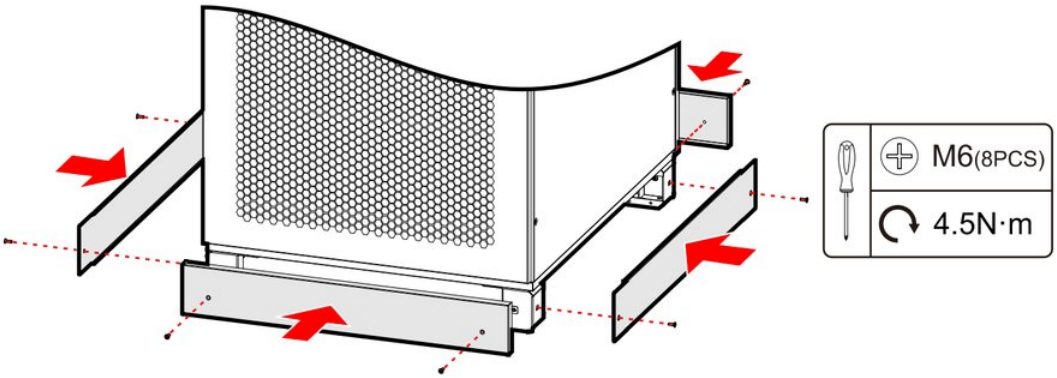

FIGURE 3-15 Install the bottom cover plates

> **NOTE**
> For the bottom wiring configuration of the UPS, the side wiring cabinet should be installed before the bottom cover plates are installed.

3.5.2 Channel Steel Installation

PROCEDURE

1. Select and plan an installation site based on the UPS size and installation space requirements.
2. Mark the positions of mounting holes on the channel steel.
3. Drillφ14mm holes on the channel steel by hammer drill.
4. Unscrew the nuts connecting UPS and the wooden tray, remove the nuts, screws, spring washers and flat washers.
5. Use a forklift to move UPS from the wooden tray to the installation holes of the channel steel.
6. Fix UPS to the channel steel.

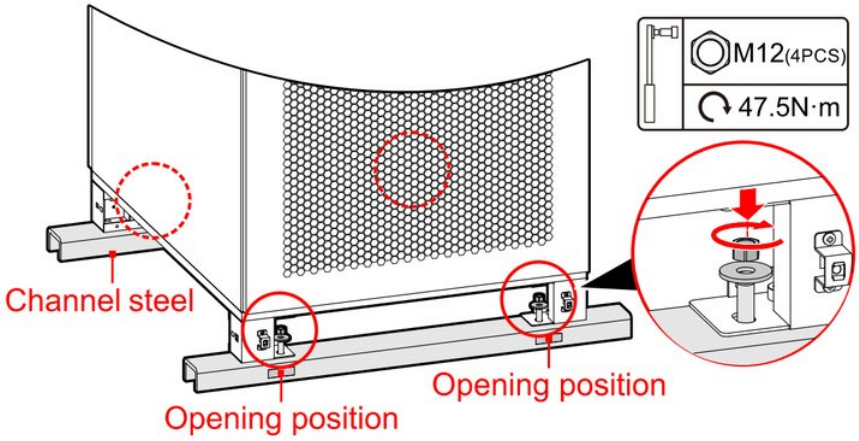

FIGURE 3-16 The opening position of the channel steels

> **NOTE**
>
> - Figure 3-16 shows the opening position of the C-shaped channel steels with the opening facing down, one cabinet, and non-wall mounting.
> - The channel steel model, installation method, whether side holes are required, hole sizes and actual cabinet number are based on the site survey data.
> - The channel steel installation requirements for each model are the same. The figure above illustrates the IST6-600 as an example; please refer to the actual delivered device for details.

7. Install the bottom cover plates of the UPS.

3.6 Optional Components Installation

> **NOTE**
>
> Components removed from the device, such as screws, plates, etc., need to be stored properly for further use.

3.6.1 SNMP Card Installation

PROCEDURE

1. Remove the cover of SNMP card on the system control box.

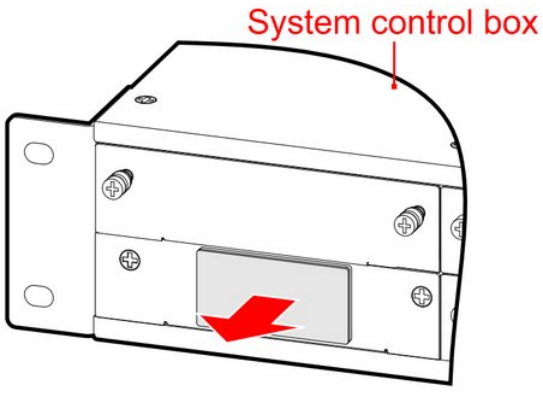

FIGURE 3-17 Remove the cover of SNMP card

2. Install the SNMP card on the system control box.

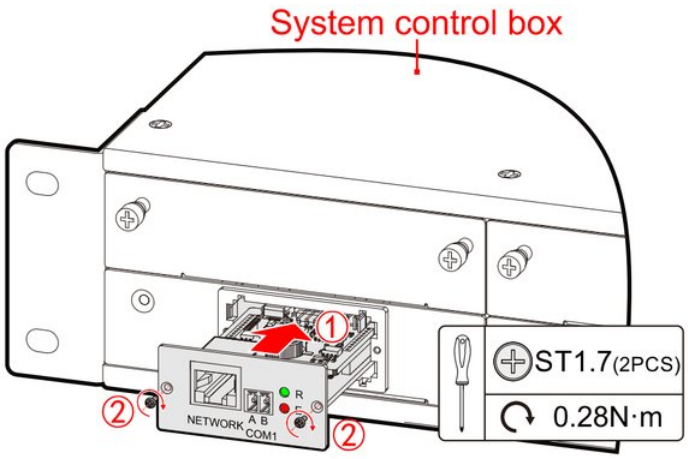

FIGURE 3-18 Install the SNMP card

3.6.2 Expansion Card Installation

Expansion cards include dry contact expansion card and BMS expansion card. Their installation methods and positions are the same. This section uses the dry contact expansion card as an example.

PROCEDURE

1. Remove the cover of the dry contact expansion card on the system control box.

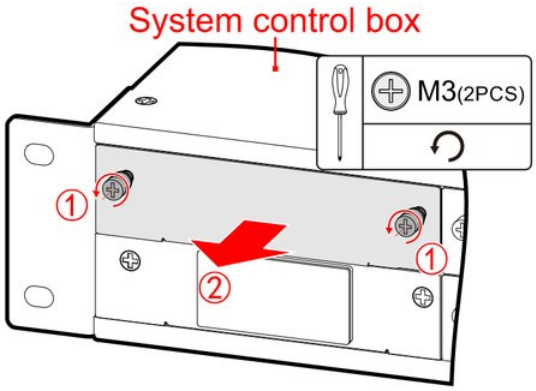

FIGURE 3-19 Remove the cover of the dry contact expansion card

2. Install the dry contact expansion card on the system control box.

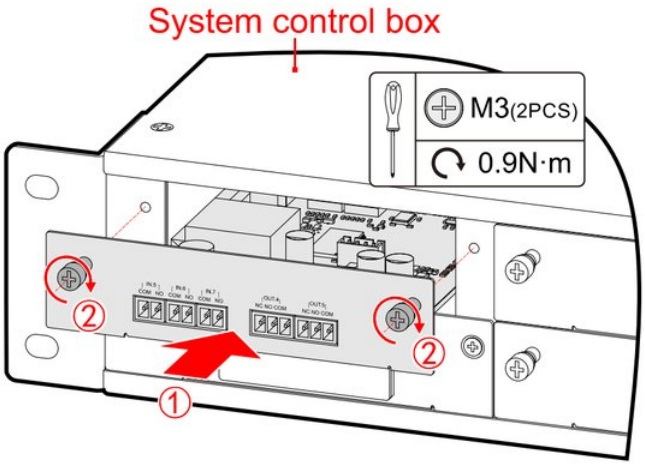

FIGURE 3-20 Install the dry contact expansion card

3.6.3 Parallel/BSC Kit Installation

Connect all the parallel/BSC ports of each UPS in the parallel system using the parallel /BSC kit, and tighten the corresponding screws of the parallel /BSC ports.

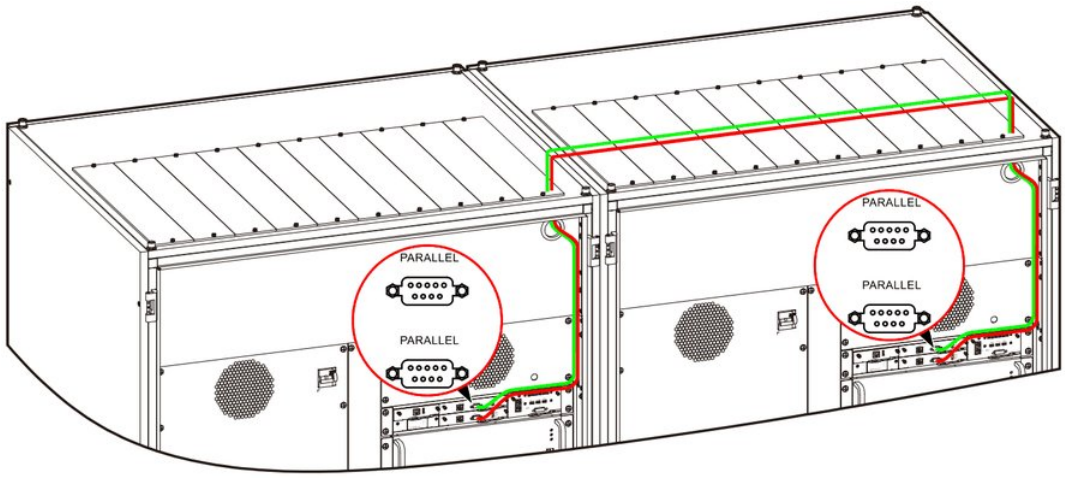

FIGURE 3-21 Parallel/BSC kit installation diagram

> **NOTE**
>
> In the above figure, the wire colors are used only to distinguish between different wiring ports. Please refer to the actual wire colors. The figure above uses the IST6-1200 as an example to illustrate the wiring path. For other models, please adjust according to the actual situation.

3.6.4 Battery Temperature Compensation Kit Installation

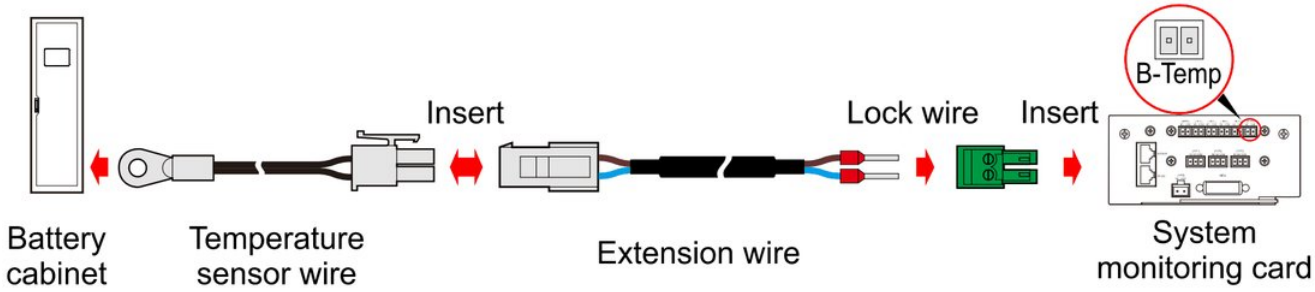

FIGURE 3-22 Battery temperature compensation kit installation diagram

> **NOTE**
>
> Secure the temperature sensor wires in the battery pack at the location where temperature needs to be measured.

3.6.5 Side Wiring Cabinet Installation

> **NOTE**
>
> - When the optional side wiring cabinet is selected for the IST6-600, and IST6-800, it must be installed on the right side of the UPS. For the IST6-1000 and IST6-1200, when the bottom wiring option is selected, the optional wiring side cabinet should be installed on both the left and right sides of the UPS.
> - For the IST6-800, IST6-1000, and IST6-1200 models, when the side wiring cabinet is selected, the internal copper bars should be assembled according to the custom solution.
> - The installation procedure for the side wiring cabinet is similar whether it is installed on the left or right side. This section illustrates the installation of the optional side wiring cabinet on the right side of the UPS for the IST6-600 as an example.

CAUTION

Since the side wiring cabinet must be installed on the side of the UPS, ensure that there is enough space on the side of the cabinet for operation before proceeding.

PROCEDURE

1. Mark the mounting hole positions at the installation location according to the UPS and side wiring cabinet mounting hole sizes, and then proceed with the UPS installation (See **3.5.1 3.5.1 I. Step 1** to **3.5.1 I. Step 5**).

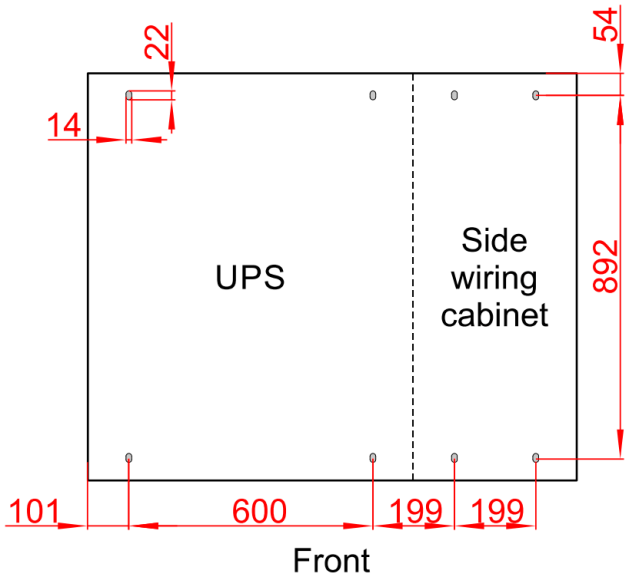

FIGURE 3-23 Mounting holes size of IST6-600, IST6-800 (bottom wiring) (unit: mm)

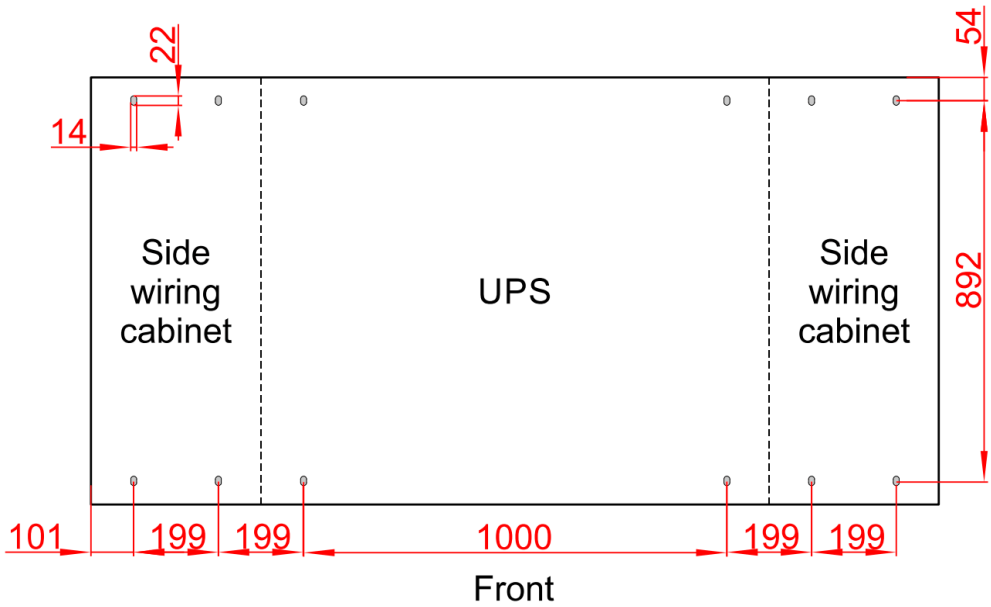

FIGURE 3-24 Mounting holes size of IST6-1000, IST6-1200 (bottom wiring) (unit: mm)

2. Remove the screws from the right cover plate of the UPS.

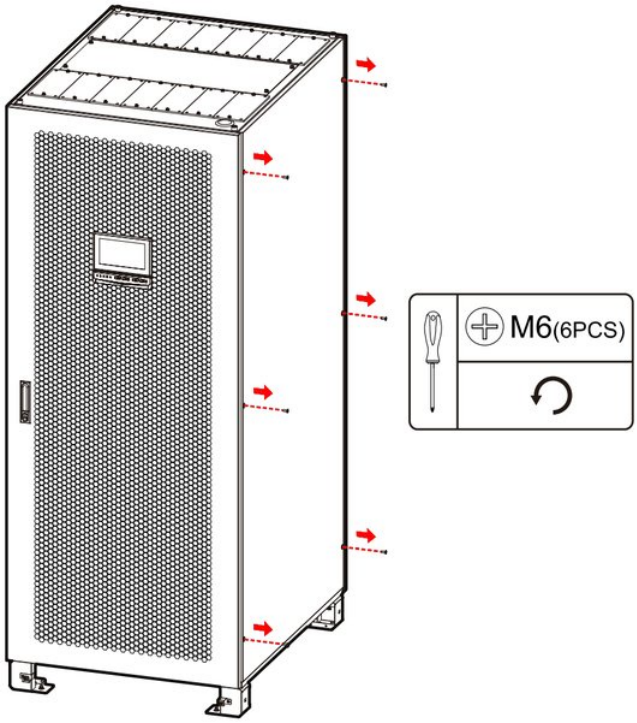

FIGURE 3-25 Remove the screws from the right-side plate of the UPS

3 Move the side wiring cabinet to the right side of the UPS, and align the installation holes with the expansion bolts that are already installed. Place the flat washers, spring washers, and nuts, then tighten the bolts.

NOTE

If using channel steel installation, move the side wiring cabinet to the position of the channel steel installation holes and secure the cabinet to the channel steel, referring to **3.5.2 Channel Steel Installation**.

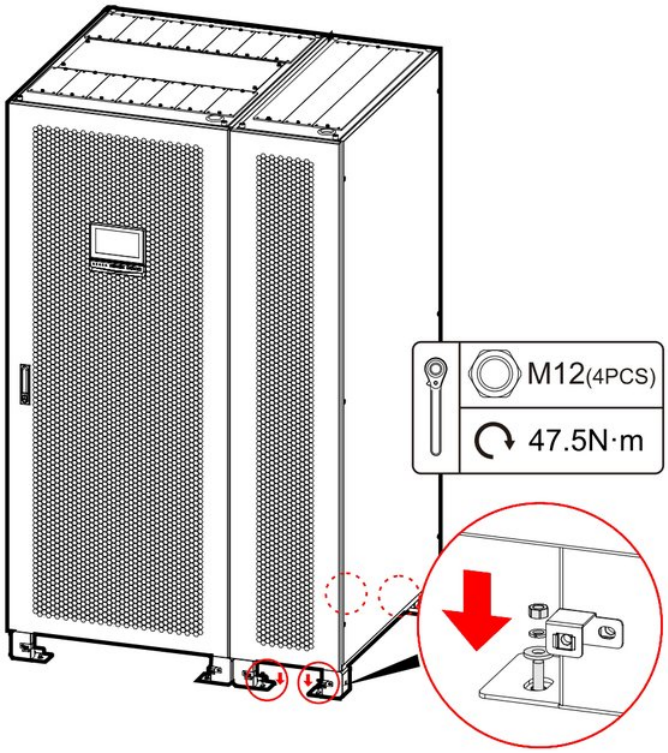

FIGURE 3-26 Fixing the side wiring cabinet

4 Open the front door of the side wiring cabinet, and remove the rear cover plate of the side wiring cabinet.

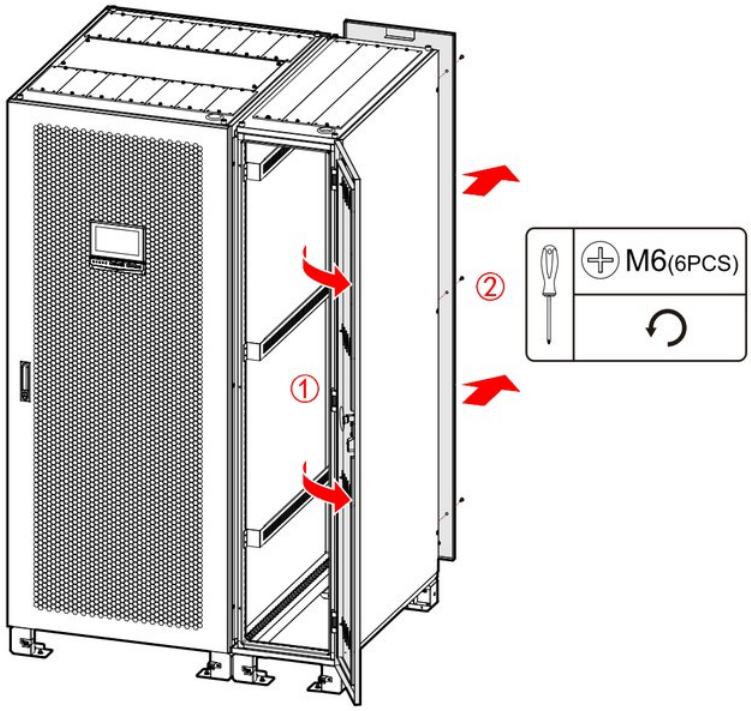

FIGURE 3-27 Open the front door and remove the rear cover plate

5 Secure the side wiring cabinet to the right cover plate of the UPS.

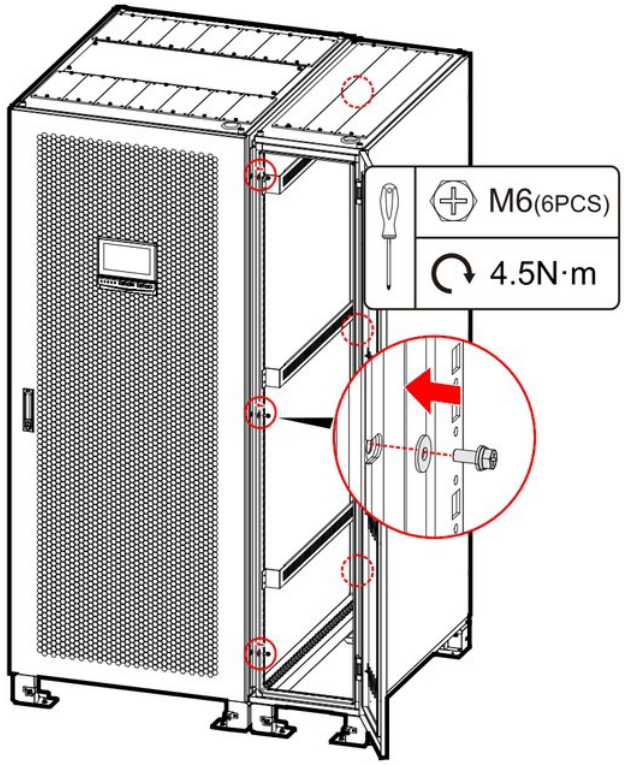

FIGURE 3-28 Tighten the screws

6 Reinstall the rear cover plate and close the front door of the side wiring cabinet.

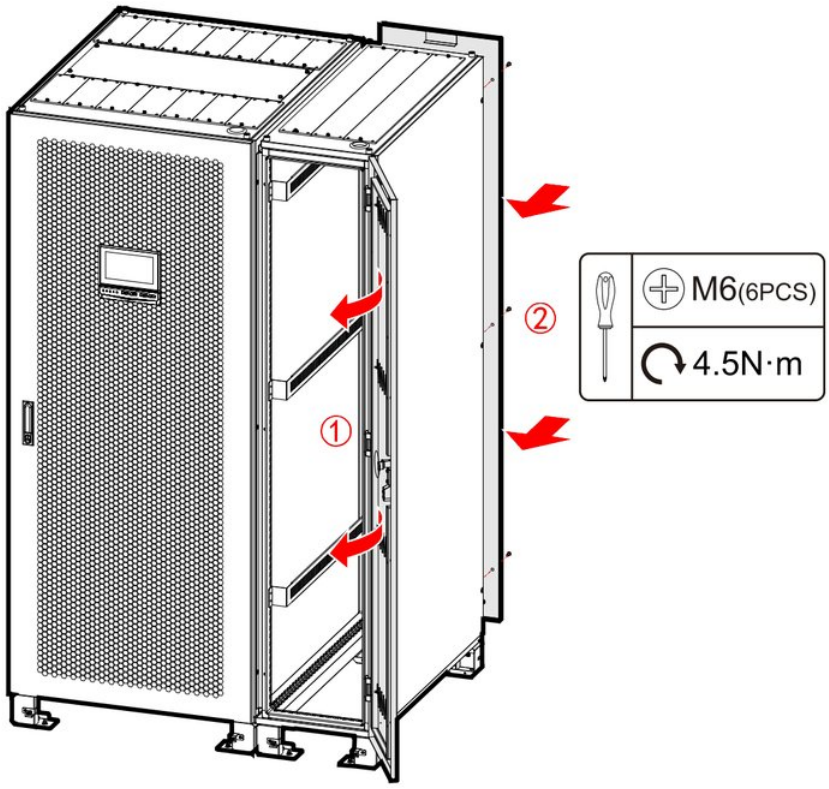

FIGURE 3-29 Reinstall the rear cover plate and close the front door

7 Install the bottom cover plates.

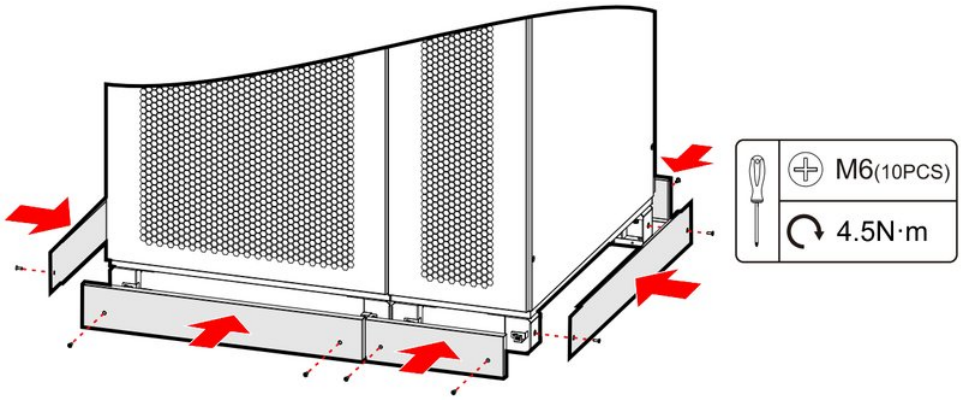

FIGURE 3-30 Install the bottom cover plates

3.6.6 Battery Grounding Detection Kit Installation

> **NOTE**
>
> The battery grounding detection kit is only applicable when the battery does not have a neutral wire. When the battery has a neutral wire, this kit cannot be connected to used. The battery grounding detection kit is only available as an option for IST6-600.

DANGER

Before installing the battery grounding detection kit onsite, power off the UPS completely.

PROCEDURE

1 Unscrew screws on the rear plate, and remove the rear plate.

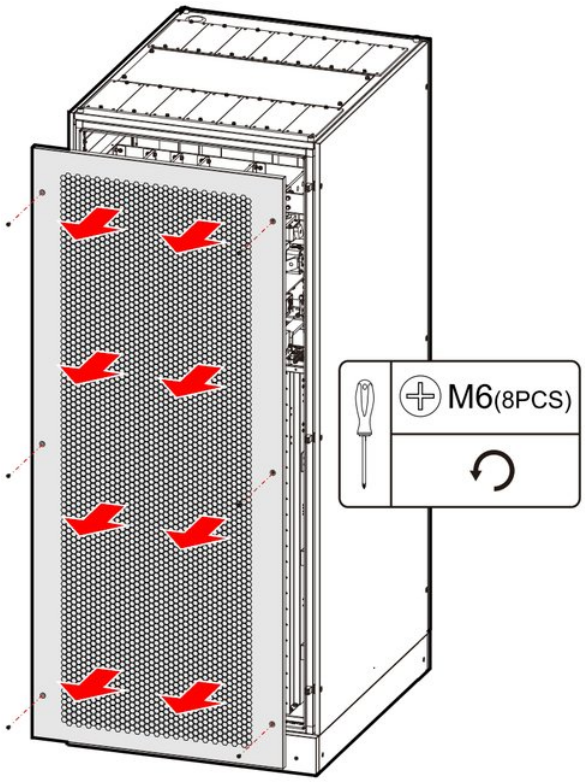

FIGURE 3-31 Dismantle the rear plate

2 Remove the screws on the copper bar and remove the copper bar.

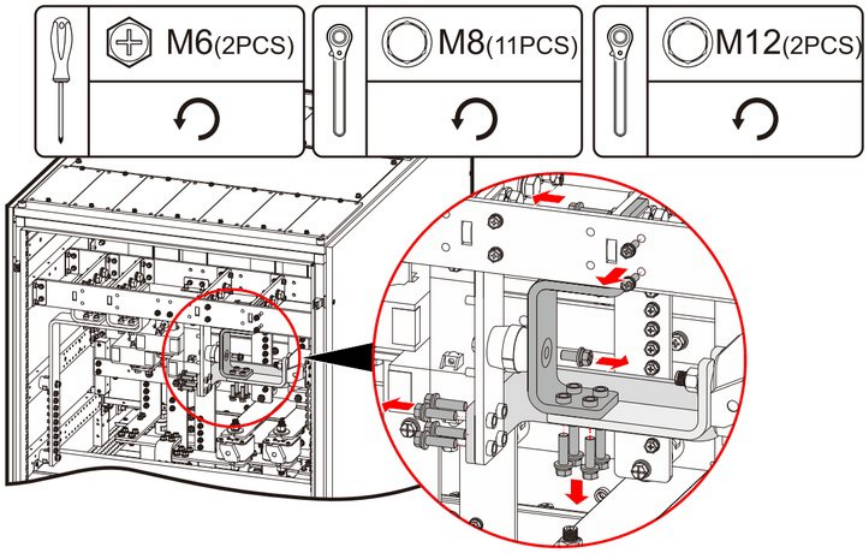

FIGURE 3-32 Remove the copper bar

3 Install the battery grounding detection PCB board and Hall sensor onto the UPS, then reinstall the copper bar to its original position.

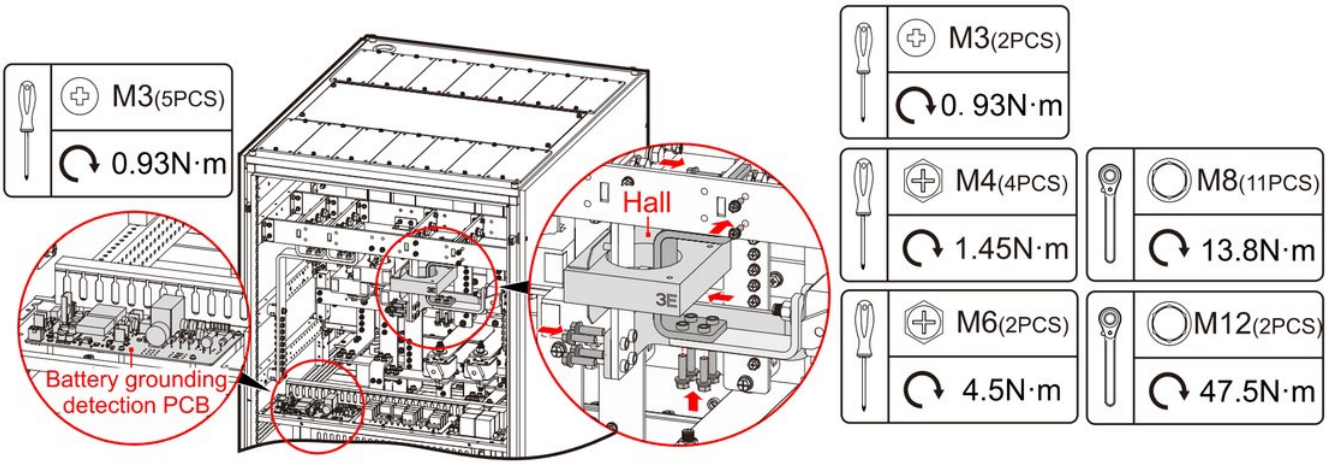

FIGURE 3-33 Install the battery grounding detection Hall sensor, PCB board and copper bar

4 Take out the wires and connect CN1 on the PCB board to the Hall communication port, CN2 to the IN port of the control box, and CN4 to the sampling points on the battery copper bars.

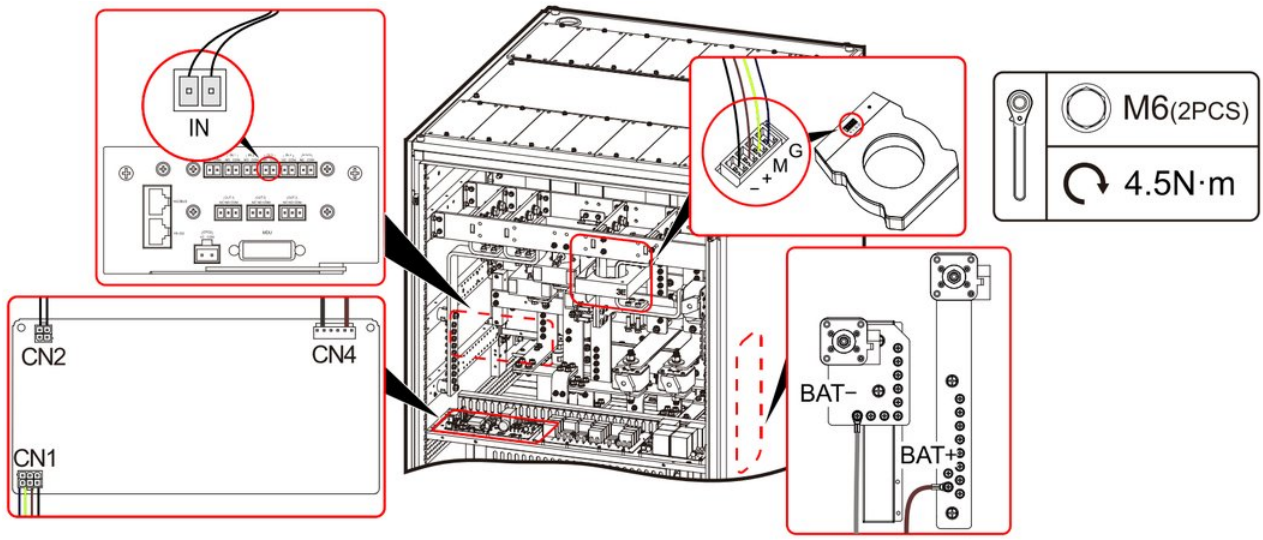

FIGURE 3-34 Wiring diagram of battery detection PCB board

NOTE

- During the wiring process, remove the corresponding cover plates as needed to make the connections.
- The IN port of the system monitoring card should be selected according to the "Input Dry Contact" settings in the "Setting Manage > Dry Contact > Input" section of the touchscreen.

5 Reinstall the rear plate.

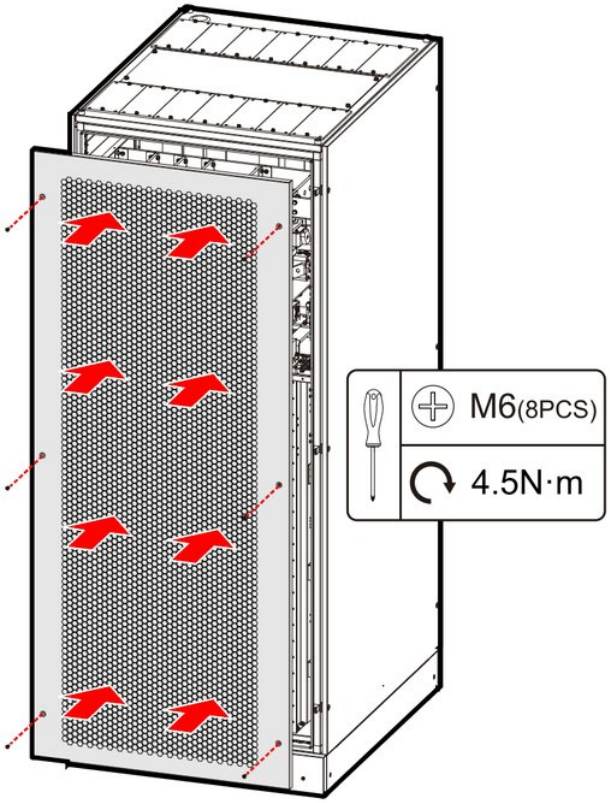

FIGURE 3-35 Install the rear plate

3.6.7 Single Power Source Kit Installation

DANGER

Before installing the single power source kit onsite, power off the UPS completely.

IST6-600

PROCEDURE

1. Open the front door of the UPS, unscrew screws on the front plate and remove the front plate.

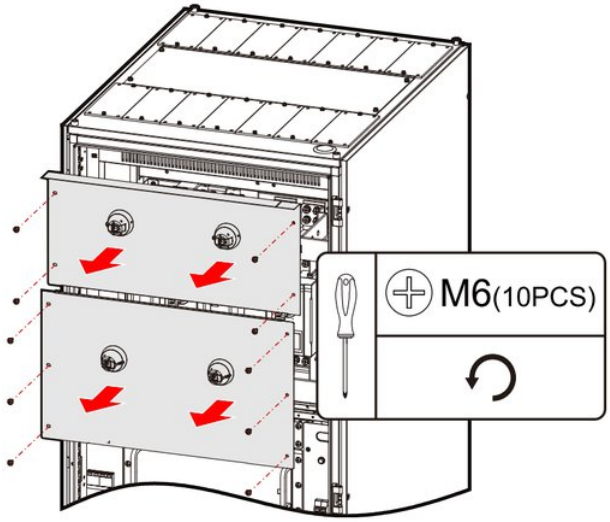

FIGURE 3-36 Dismantle the front plate

2. Install the single power source kit to mains copper bars and bypass copper bars respectively.

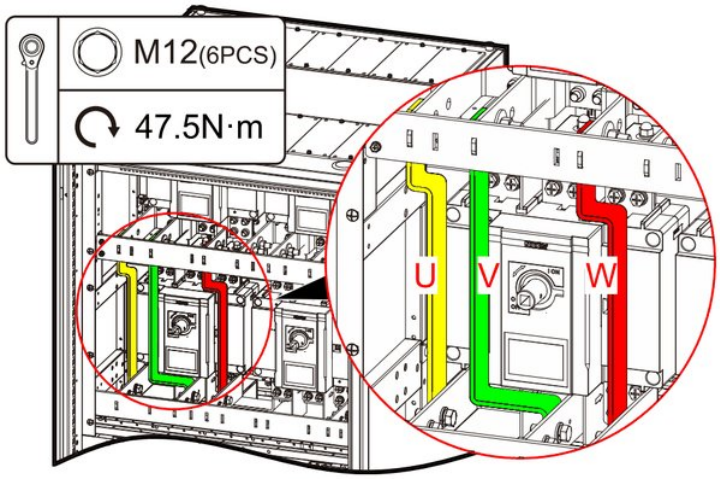

FIGURE 3-37 Install the single power source kit of IST6-600

3 Install the front plate, and close the front door.

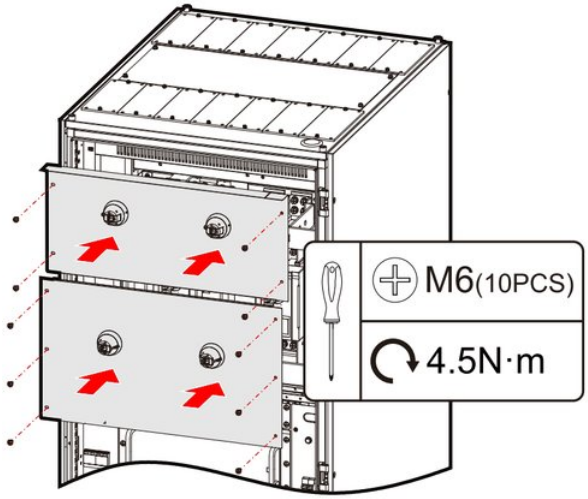

FIGURE 3-38 Install the front plate

IST6-800

PROCEDURE

1 Remove the top cover plates.

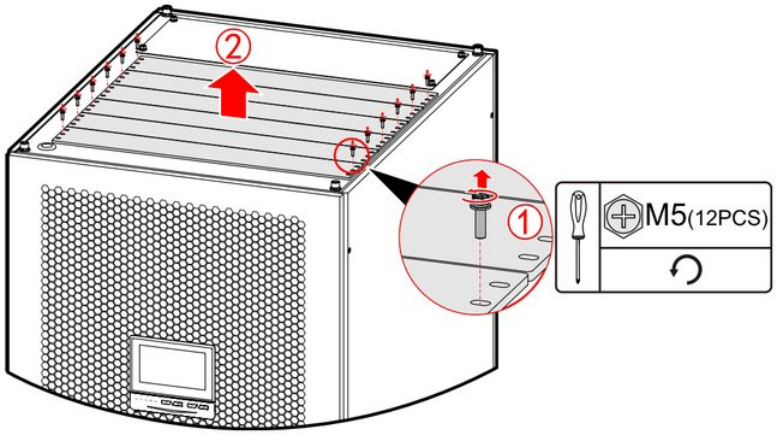

FIGURE 3-39 Remove the top cover plates

2 Install the single power source kit to mains copper bars and bypass copper bars respectively.

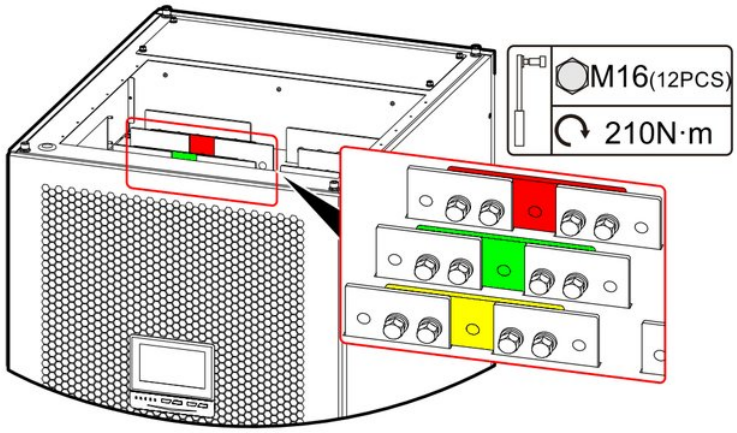

FIGURE 3-40 Install the single power source kit

> **NOTE**
> When the single power source kit is selected, the input cables must be directly connected to the single power source copper bars.

3 Reinstall the top cover plates.

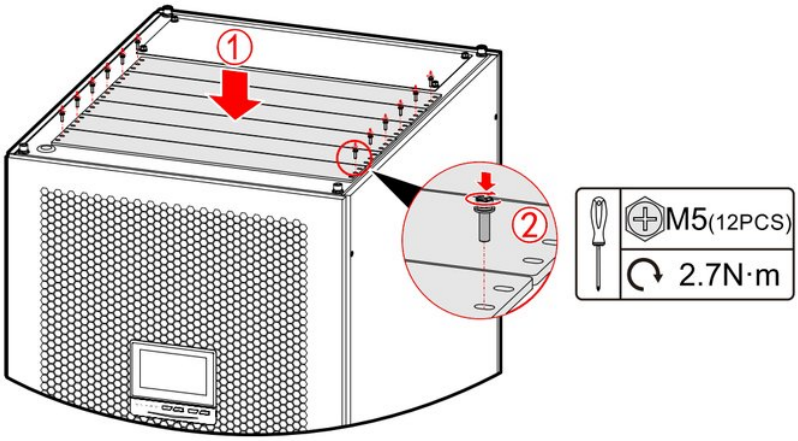

FIGURE 3-41 Install the top cover plates

IST6-1000, IST6-1200

PROCEDURE

1 Open the front door of the UPS, remove the front plate and top plates.

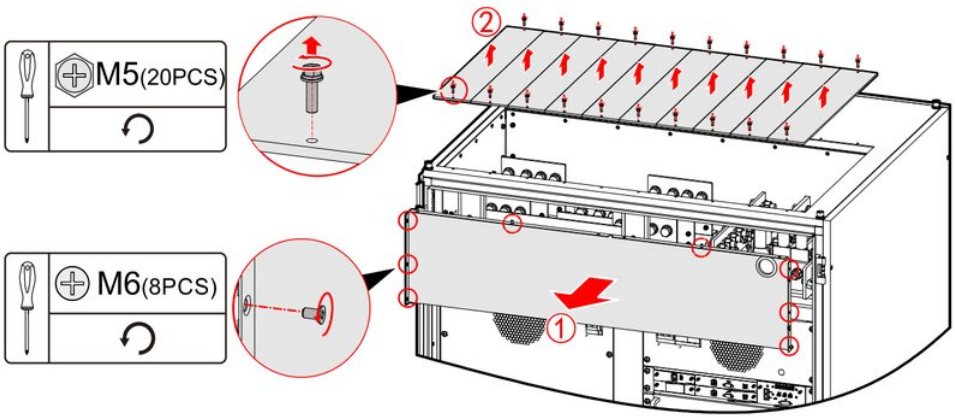

FIGURE 3-42 Dismantle the front plate and top plates

2 Install the single power source kit to mains copper bars and bypass copper bars respectively, and install the output adapter copper busbars.

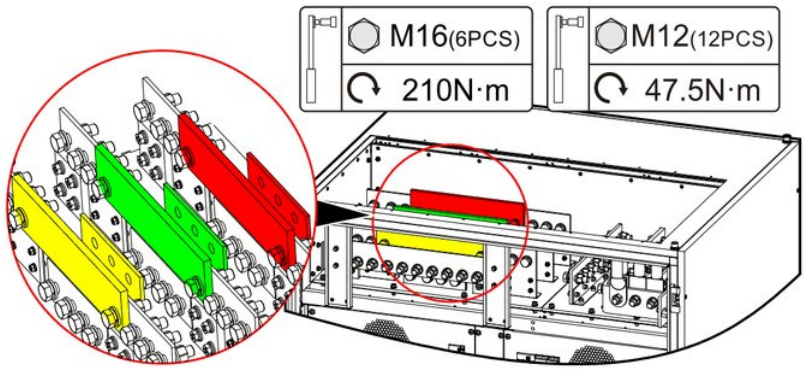

FIGURE 3-43 Install the single power source kit

3 Reinstall the front plate and top plates, and close the front door.

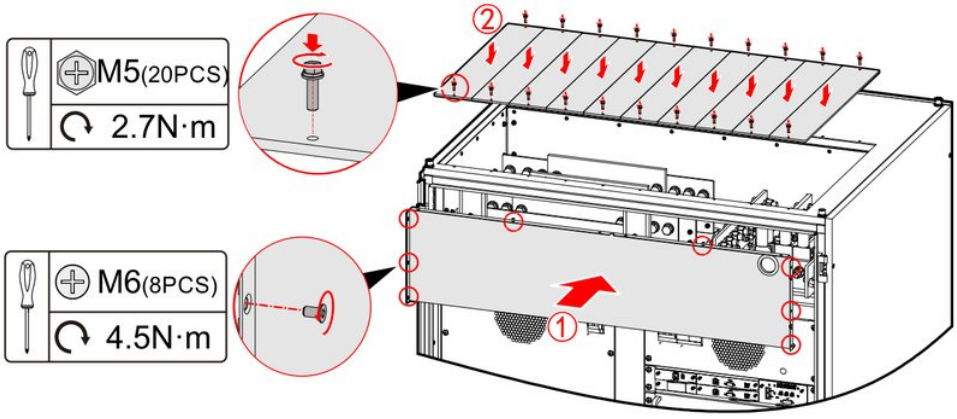

FIGURE 3-44 Install the front plate and top plates

3.6.8 Top Air Outlet Kit Installation

> **NOTE**
> Only the top air outlet kit for IST6-600 requires on-site installation.

PROCEDURE

1 Remove the top cover plate.

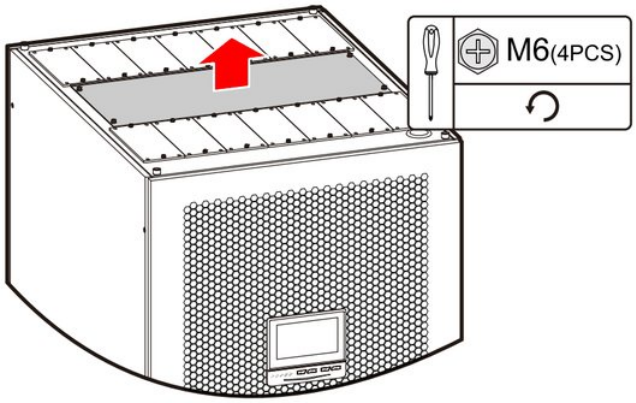

FIGURE 3-45 Remove the top cover plate

2 Install the copper busbar protective caps.

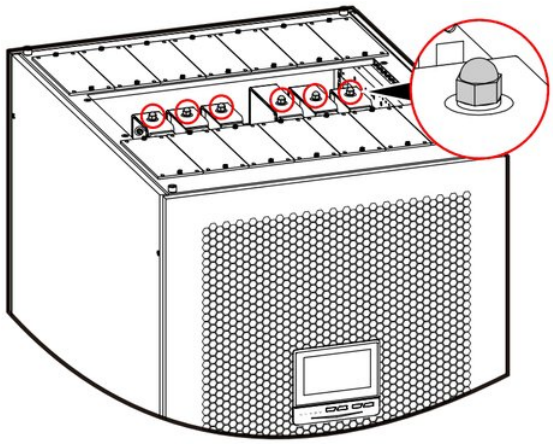

FIGURE 3-46 Install the protective caps

3 Install the top air outlet kit to the top of the UPS.

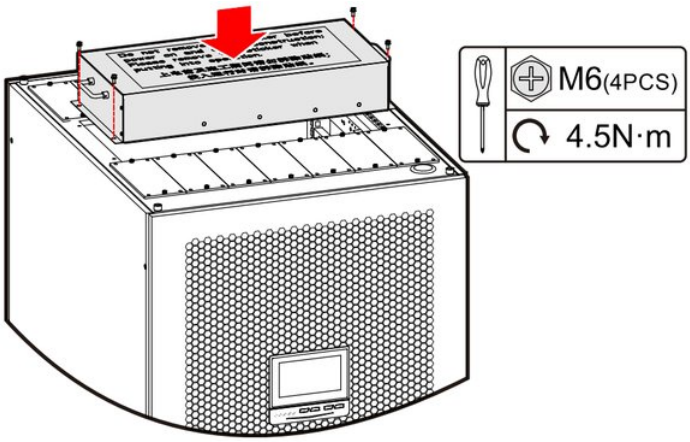

FIGURE 3-47 Install the top air outlet kit

CAUTION

Before powering on and during installation, do not remove the sticker on the top of the top air outlet kit. Remove the sticker only before commissioning.

3.7 Electrical Connection

CAUTION

To prevent poor connection caused by excessive tension, it is recommended to leave extra slack in the cables before connecting them to the corresponding ports.

NOTE

The cable colors shown in all electrical connection diagrams in this manual are for reference only. The selection of cables should comply with local cable standards (the yellow and green cable can only be used for protective grounding).

3.7.1 Electrical Connection Preparation

WIRE PREPARATION

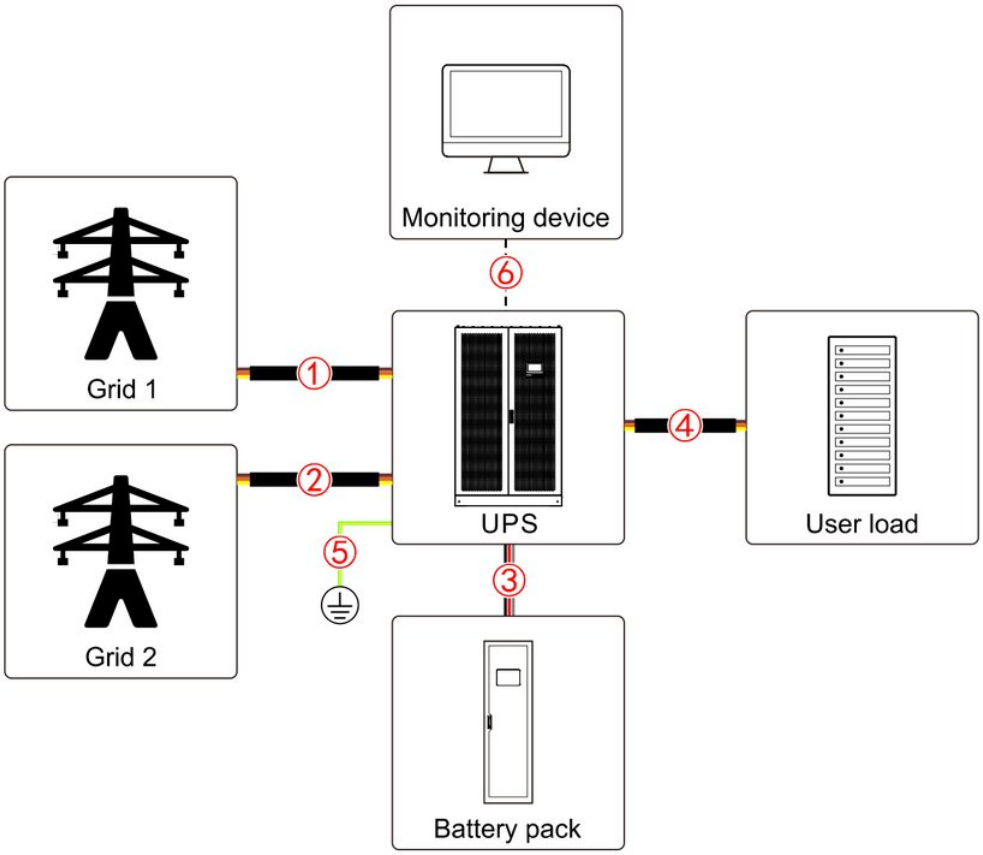

FIGURE 3-48 Electrical connection overview diagram

TABLE 3-6 Recommended requirements for copper cables, terminals and bolts

No.	Items		IST6-600	IST6-800	IST6-1000	IST6-1200
	Mains input (U/V/W)	Current (A) Recommended re specification (mm2) Terminal model Bolt specification	991	1322	1652	1982
			3*(4*240)	4*(4*240)	5*(4*240)	6*(4*240)
			DT-240	DT-240	DT-240	DT-240
			M12*35	M16*30	M16*60	M16*60
	Bypass input (U/V/W)	Current (A) Recommended re specification (mm2) Terminal model Bolt specification	909	1212	1515	1818
			3*(4*240)	4*(4*240)	5*(4*240)	6*(4*240)
			DT-240	DT-240	DT-240	DT-240
			M12*35	M16*30	M16*60	M16*60
	Battery input (with 40 pieces of 12V lead- acid batteries)	Nominal discharge current of lead-acid battery (A)	1302	1735	2169	2603
		Maximum discharge current of lead-acid battery (A)	1487	1983	2479	2975
		Recommended wire specification (+/N/-) (mm2)	4*(3*240)	6*(3*240)	7*(3*240)	8*(3*240)
		Recommended wire specification (+/-) (mm2)	4*(2*240)	6*(2*240)	7*(2*240)	8*(2*240)
		Terminal model	DT-240	DT-240	DT-240	DT-240
		Bolt specification	M12*35	M16*30	M16*60	M16*60
	Battery input (with 30 pieces of 12V lead- acid batteries)	Nominal discharge current of lead-acid battery (A)	1389	1852	2314	2777
		Maximum discharge current of lead-acid battery (A)	1587	2117	2644	3174
		Recommended wire specification (+/N/-) (mm2)	4*(3*240)	6*(3*240)	7*(3*240)	8*(3*240)
		Recommended wire specification (+/-) (mm2)	4*(2*240)	6*(2*240)	7*(2*240)	8*(2*240)
		Terminal model	DT-240	DT-240	DT-240	DT-240
		Bolt specification	M12*35	M16*30	M16*60	M16*60
	Output (U/V/W/N)	Current (A)	909	1212	1515	1818
		Recommended wire specification (mm2)	3*(4*240)	4*(4*240)	5*(4*240)	6*(4*240)
		Terminal model	DT-240	DT-240	DT-240	DT-240
		Bolt specification	M12*35	M16*30	M16*60	M16*60
	Equipotential (PE)	Recommended wire ground specification (mm) Terminal model	2*240 DT-240	2*240 DT-240	3*240 DT-240	3*240 DT-240
Bolt specification	M12*35	M16*30	M16*60	M16*60		
	Dry contact	Recommended wire specification (mm2)	RVVP2*0.75			
		Terminal model	E7508			
	Modbus, RS485, Ethernet, BMS, NETWORK	Recommended wire RS232, specification (mm)	Cat.5e network wire			
		Terminal model	RJ-45			

NOTE

- The cables and wiring terminals should be provided by the customer.
- The select of cables should be based on the site survey data and the recommended cables are for reference only.
- The selection, installation, and routing of cables should comply with local regulations and standards.
- When installation methods or environmental conditions such as temperature change, verification should be carried out according to IEC-60364-5-52 or local relevant standards.
- If the major load is a non-linear load, the cross-sectional area of output neutral wire needs to be increased to 1.5 ~ 1.7 times.
- The nominal discharge current of the lead-acid battery refers to the current value at the voltage of 480V (without neutral wire)/±240V (with neutral wire) when configure 40 cells of 12V lead-acid battery. The maximum discharge current of the lead-acid battery refers to the current value when a single 12V battery is discharges to 10.5V. Battery wire specifications are 40 cells by default, compatible with 30 to 50 cells.
- When the system is configured with Li-battery, the recommended specifications for battery input cables should refer to **IEC-60364-5-52** and **lithium battery system user manual**.
- When mains and bypass with the same power, the input wire specifications are the same as the mains input wire specifications.
- The recommended wires in the above table are only applicable to the following conditions: - Laying method: Wires are laid in a single layer (IEC60364-5-52). The distance between wires is greater than twice the cross-sectional area of wire. - AC voltage loss is less than 3%, and DC voltage loss is less than 1%. - Cable type: It is recommended to use copper conductor flexible cables with a maximum working temperature of 90 °C to avoid poor terminal contact due to bending stress. - It is recommended that the length of AC cables should not exceed 30 meters and the length of DC cables should not exceed 50m.

- In parallel operation, the length and specifications of each unit's power cables should be as consistent as possible, including bypass input cables and UPS output cables, so that equal current distribution can be achieved in bypass mode.

WARNING

Overloading of cables is strictly prohibited!

WIRE CONNECTION REQUIREMENTS

WARNING

Incorrect wiring sequence may lead to fire. Please pay attention to the wiring sequence of the wiring components.

When connecting, ensure that the connector is tight. The poor connection or contact surface oxidation will cause excessive heat, which may cause a fire.

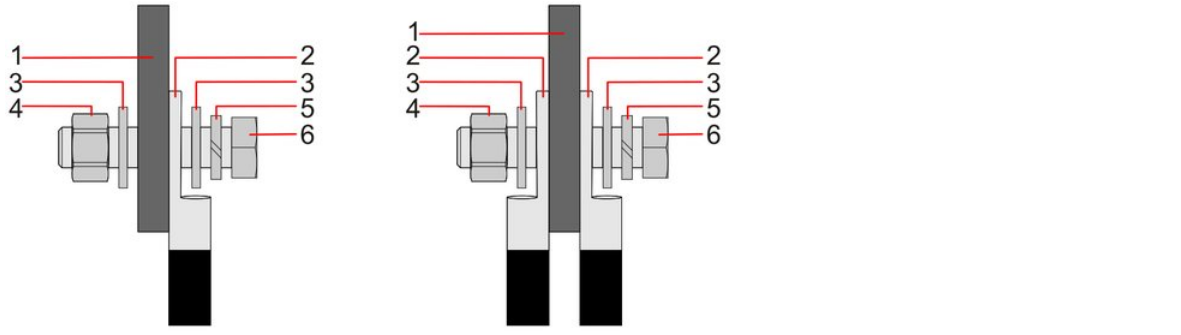

(1) Copper bar (2) Copper terminal (3) Flat washer (4) Nut (5) Spring washer (6) Screw

FIGURE 3-49 Copper wire terminal connection diagram

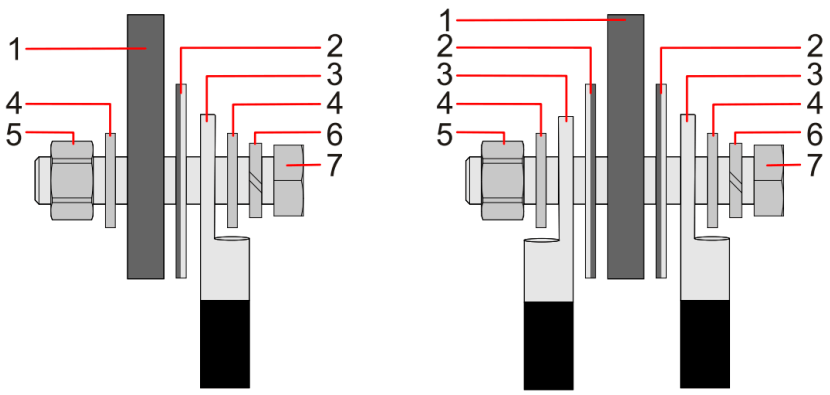

FIGURE 3-50 Aluminum wire terminal connection diagram

CAUTION

- When using a copper-aluminum plate, pay attention to the front and back sides to ensure that the aluminum surface of plate is in contact with the aluminum terminal, and the copper surface is in contact with copper bar.
- If a busbar has multiple adjacent terminals that need to be connected, an entire copper- aluminum plate can be used.

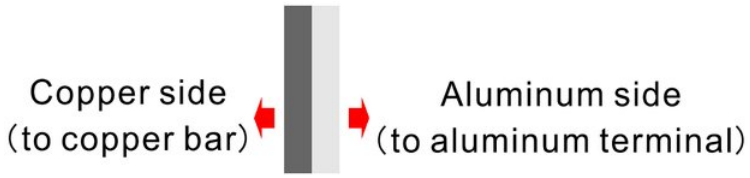

FIGURE 3-51 Copper-aluminum plate connection direction

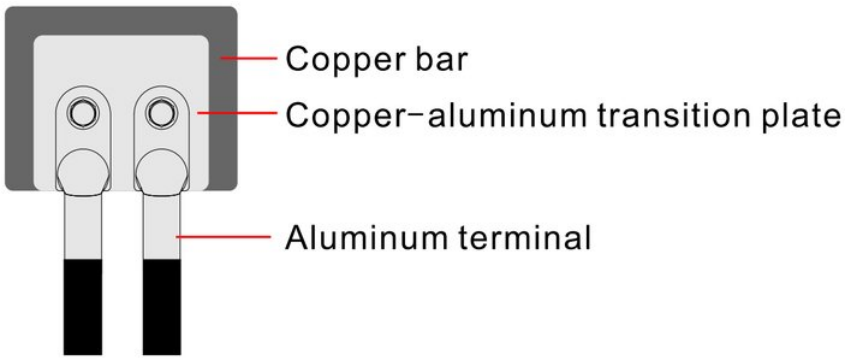

FIGURE 3-52 Copper-aluminum plate connection diagram

BREAKER PREPARATION

The external configuration of independent breakers on the UPS AC side can better protect the load. When an accident occurs on the UPS or mains side, the breaker can be disconnected in the first time, achieving selective protection by safely disconnecting the circuit connection.

WARNING

- No loads may be connected between the UPS and the breaker.
- Multiple UPSs may not share an AC breaker.

TABLE 3-7 Recommended input front-end/output back-end breaker specifications

Model Type	IST6-600	IST6-800	IST6-1000	IST6-1200
Mains input breaker	1250A/3P	1600A/3P	2500A/3P	2500A/3P
Bypass input breaker	1250A/3P	1250A/3P	2000A/3P	2000A/3P
Output back-end breaker	1250A/3P	1250A/3P	2000A/3P	2000A/3P
Maintenance bypass breaker	1250A/3P	1250A/3P	2000A/3P	2000A/3P

NOTE

- The recommended breaker specifications are only applicable when the short-circuit current at the device's location is less than 65kA.
- The recommended breaker specifications for the mains input are for reference only.
- The breakers at the bypass input and output ends should be selected based on the UPS's rated current. If the UPS is to be used for overload, the breaker specifications should be adjusted according to the current after the overload.
- The external maintenance bypass breaker should be selected based on the UPS single-unit scenario, and for parallel scenarios, the total current should be considered when adjusting the breaker specifications.
- Breakers with leakage protection are not recommended to prevent mis-operation caused by leakage currents generated by the UPS.
- When there are multiple breakers at the output end, ensure that the specifications of each breaker specification do not exceed the recommended breaker specifications.

3.7.2 UPS Connection

WARNING

- Do not reverse connect grounding wire and neutral wire, live wire and neutral wire, which may cause electrical short circuit!
- The grounding should be good, and the neutral-to-grounding voltage should not be higher than 5V.

CAUTION

When wiring, ensure that the contact between wire and terminal is firm. Do not allow poor connections or reverse wiring.

IST6-600

PROCEDURE

1. Use a key to open the front door of the UPS.

WARNING

Before connecting the cables, make sure the mains switch, output switch, bypass switch, maintenance bypass switch, and external battery switch are all in the OFF position.

NOTE

The operation direction of switch operation lever should be the same as the direction of the switch.

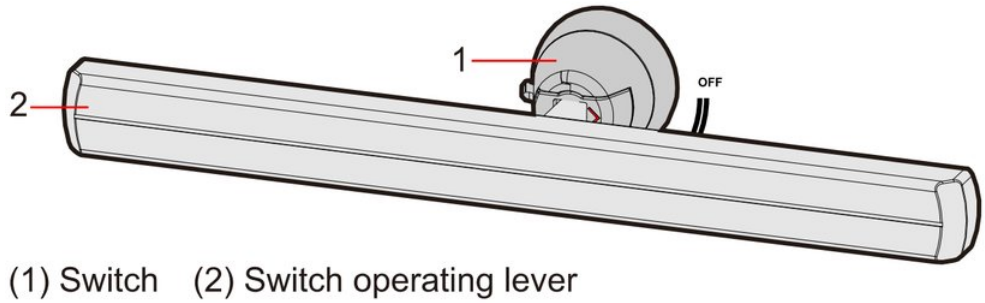

FIGURE 3-53 Place the switch to OFF

2 Unscrew screws on the front plate and rear plate, and remove the front plate and rear plate.

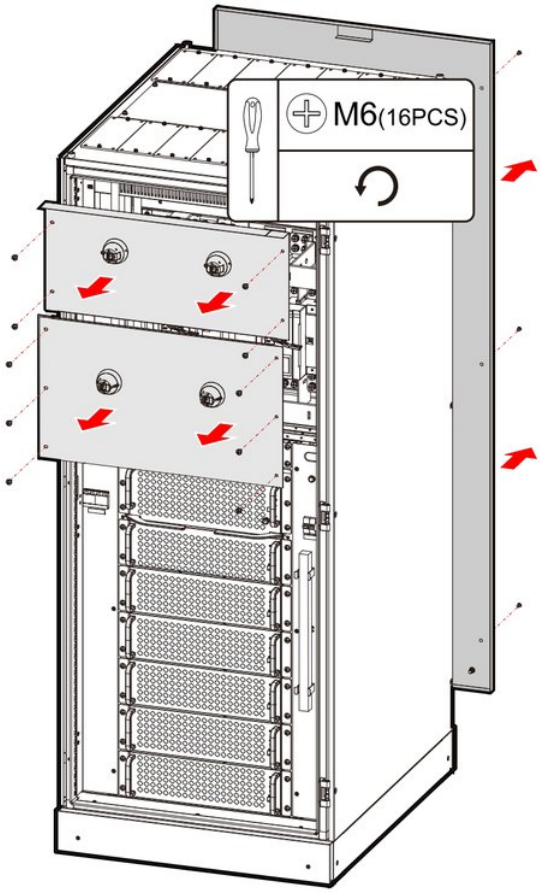

FIGURE 3-54 Dismantle the front plate and rear plate

NOTE

The plate position is the same, with the illustration using the version with switches as an example.

3 Crimp the mains input, output, bypass, and battery positive and negative cables onto the corresponding wiring terminals.

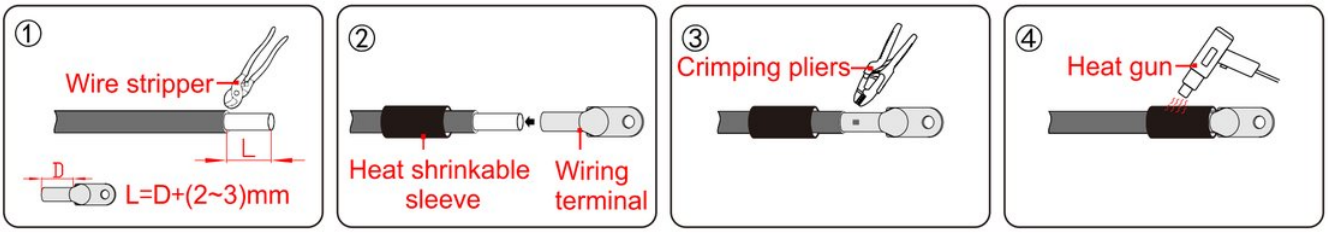

FIGURE 3-55 Cable crimping diagram

NOTE

The crimping process for each cable is the same, and the diagram above illustrates the crimping process for a single cable.

CAUTION

When stripping the cables, it is necessary to pull the cables out of the cabinet, to avoid leaving the wire skin, metal core, etc., inside the cabinet, affecting the normal operation of the device, as shown below.

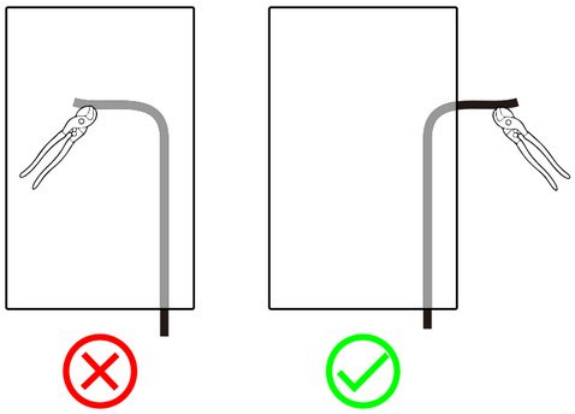

FIGURE 3-56 Stripping operation requirements

4 Connect the crimped cables to the corresponding copper bars of the UPS, and tighten the bolts.

CAUTION

When installing the UPS, it must be grounded first. When removing UPS, the grounding wire must be removed last.

Battery positive and negative wires should be connected correctly and terminals connected firmly.

Battery DC input requires to add a DC switch, the wiring is as shown in Figure 3-57.

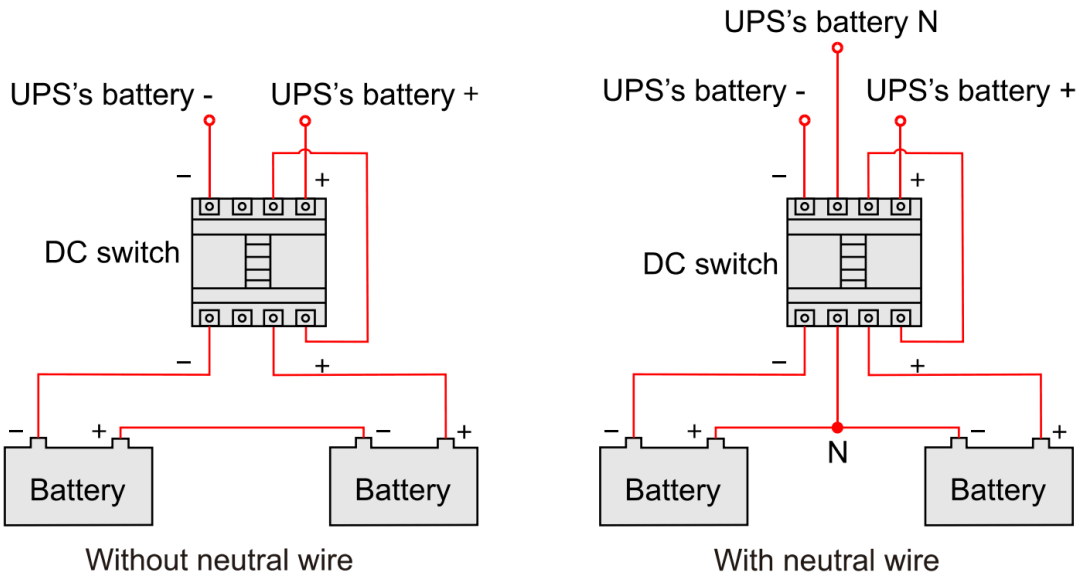

FIGURE 3-57 Battery wiring diagram

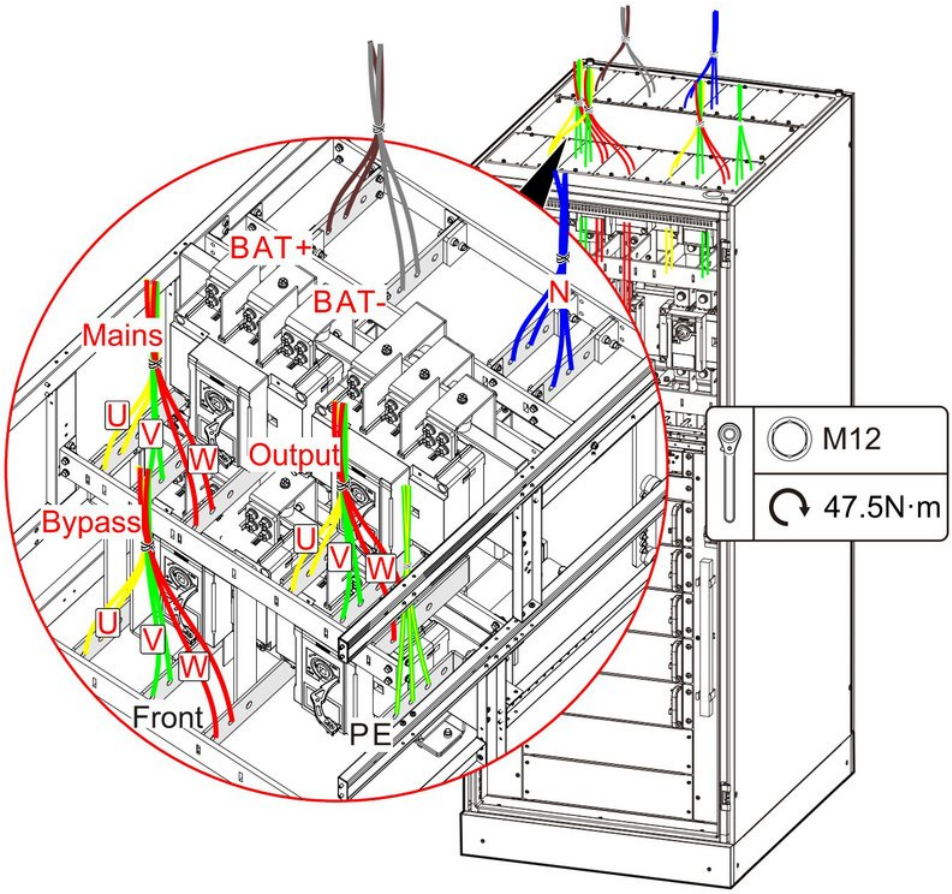

FIGURE 3-58 Wiring diagram (top wiring)

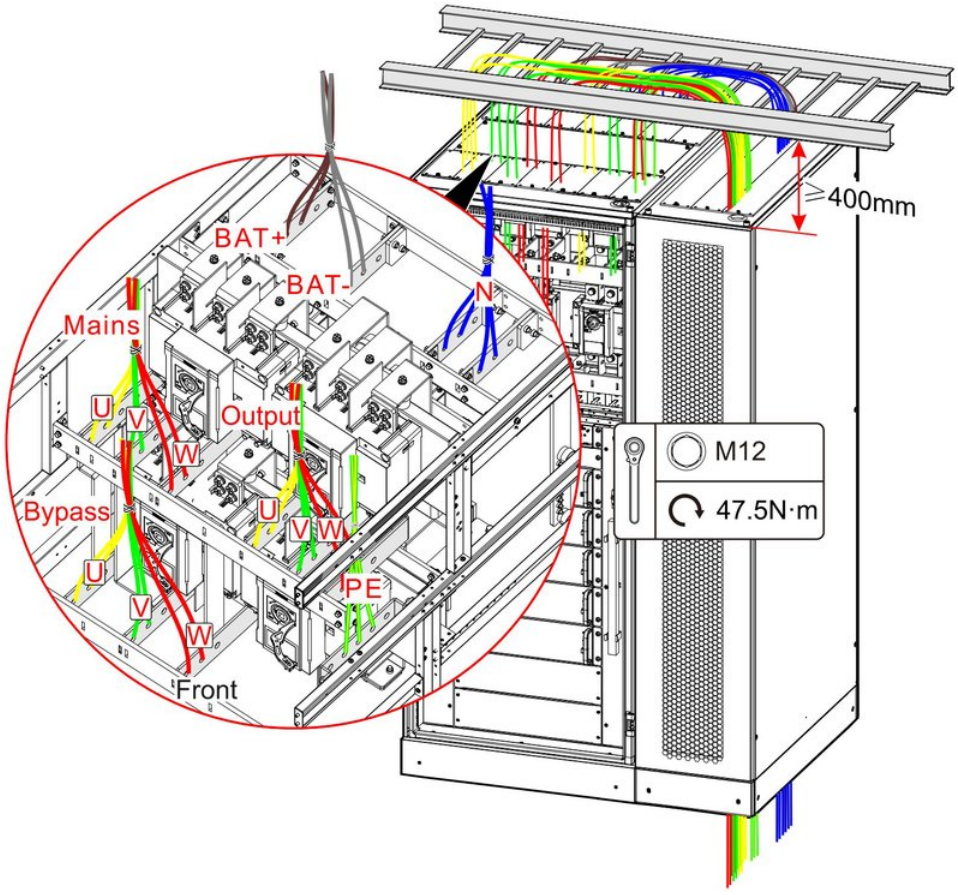

FIGURE 3-59 Wiring diagram (bottom wiring)

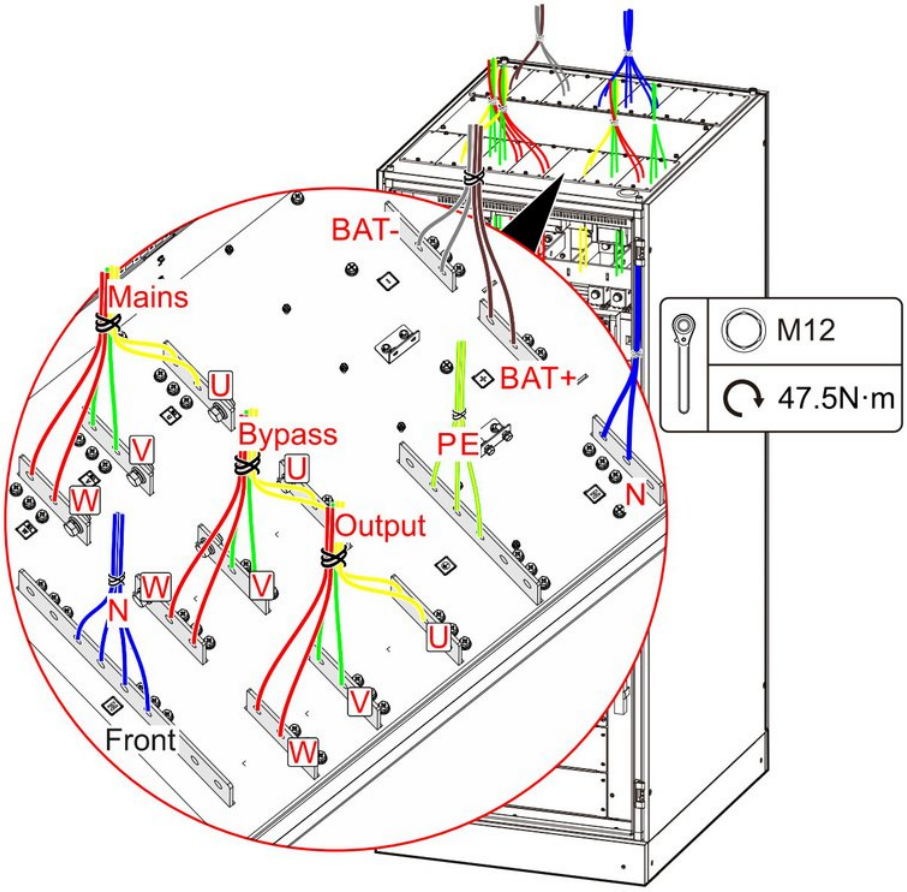

FIGURE 3-60 Wiring diagram (no switch version - top wiring)

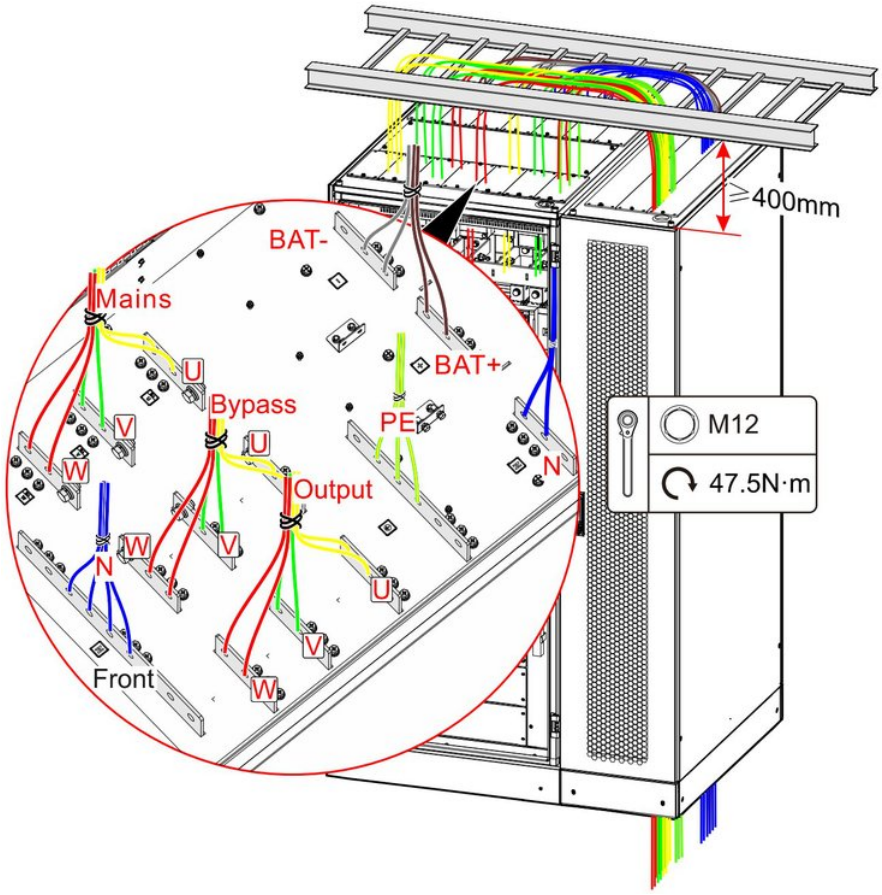

FIGURE 3-61 Wiring diagram (no switch version - bottom wiring)

NOTE

- To ensure good electrical performance, during wiring, please connect the U, V, and W cables to the same side of the copper bar.
- When wiring the system, the cables must first pass through the epoxy board's cable entry hole at the top of the cabinet, and then proceed with the wiring. To implement bottom wiring, a side wiring cabinet must be selected, and a cable tray should be installed on top before proceeding with the wiring.
- For shared battery pack mode, the battery's neutral wire must pass through the cable entry hole and connect to the UPS's N busbar.
- The cable tray is provided by the customer. Above figures are for illustration purposes only; the actual tray should be based on the one purchased on-site.

5 Fix the wires to the epoxy plates via cable ties, and reinstall the front plate and rear plate.

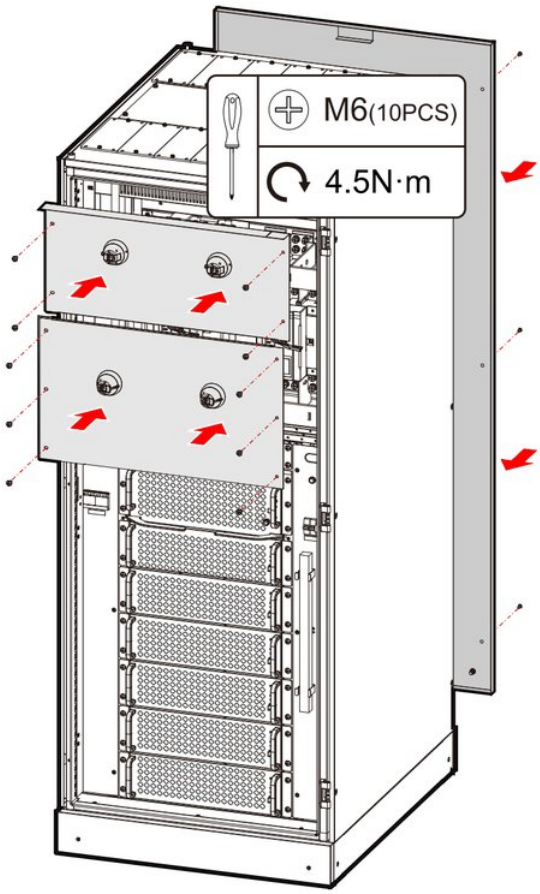

FIGURE 3-62 Install the front plate and rear plate

6 Connect the communication wires.

1. Crimp the corresponding communication wires based on the communication method.

NOTE

Dry contact communication uses tubular terminals, and the corresponding crimping is shown in Figure 3-63. Ethernet, RS485, RS232, Network, and MODBUS communications use RJ45 connectors for connection, with the corresponding crimping shown in Figure 3-64. Pin definitions for each interface are provided in the Table 3-8.

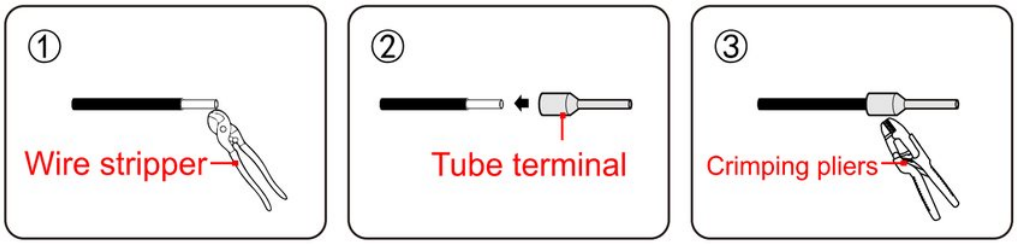

FIGURE 3-63 Wire crimping diagram of dry contact communication

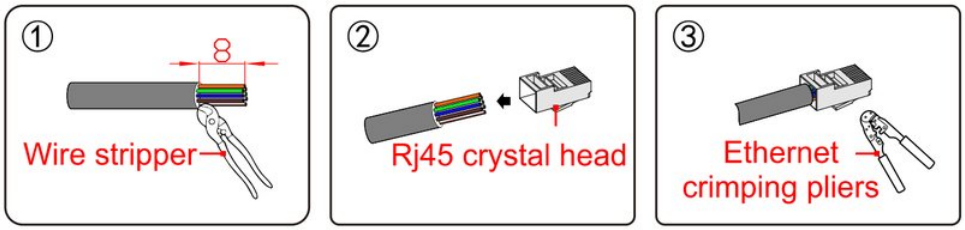

FIGURE 3-64 Wire crimping diagram of Ethernet, MODBUS, RS232, RS485, Network

TABLE 3-8 Pin definitions for each interface

Pin	Ethernet	MODBUS	RS232	RS485	BMS	Network
1 (white-orange)	TX+	A	TX	A	A	TX+
2 (orange)	TX-	B	RX	B	B	TX-
3 (white-green)	RX+	Reserved	Reserved	Reserved	Reserved	RX+
4 (blue)	TERM	B	TX	B	B	TERM
5 (white-blue)	TERM	A	RX	A	A	TERM
6 (green)	RX	Reserved	Reserved	Reserved	Reserved	RX-
7 (white-brown)	TERM	5V power	5V power	Reserved	Reserved	TERM
8 (brown)	TERM	GND	GND	GND	GND	TERM

1. Plug the crimped communication wires into the corresponding communication interfaces as needed.

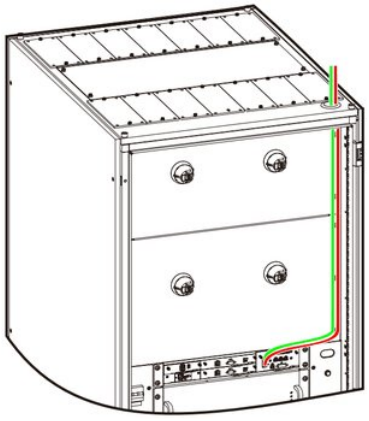

FIGURE 3-65 Connect the communications wires (top wiring)

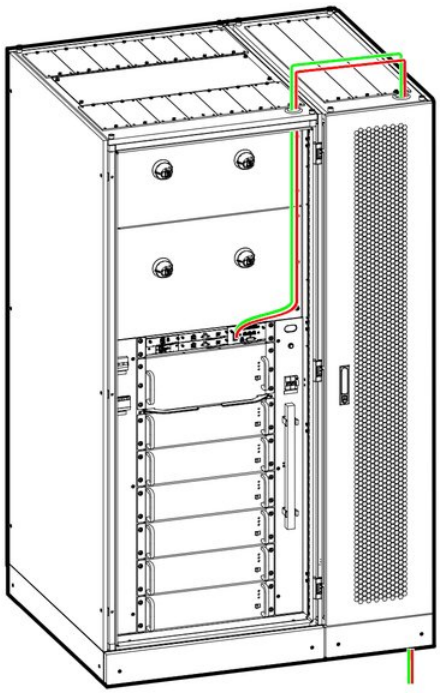

FIGURE 3-66 Connect the communications wires (bottom wiring)

> **NOTE**
> The wire color and the connected ports in above figures are for illustration purpose only, the positions and descriptions of each port are detailed in section **2.4.3 System Control Box**.

7. Close the front door.
8. Seal the wiring hole with sealing putty.

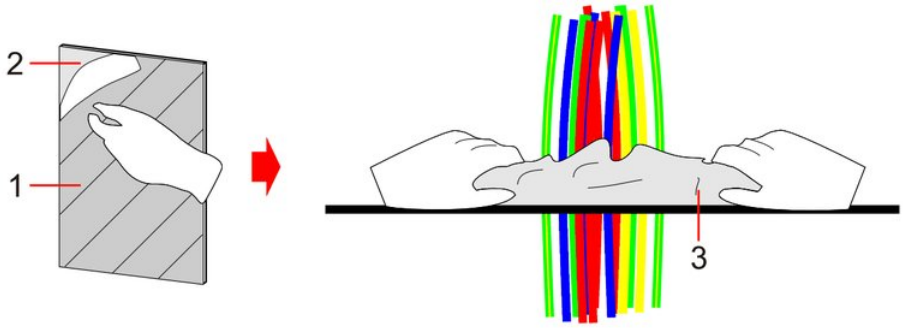

(1) Paper protection film (2) Transparent film (Do not tear off the film)
(3) Seal putty (with the transparent film facing upward)

FIGURE 3-67 Sealing putty sealing diagram

> **NOTE**
> The recommended sealing putty material is black flame-retardant butyl rubber patch sealing putty.

IST6-800

PROCEDURE

1. Remove the top cover plates.

> **WARNING**
> Before connecting the cables, make sure the external mains switch, output switch, bypass switch, maintenance bypass switch, and battery switch are all in the OFF position.

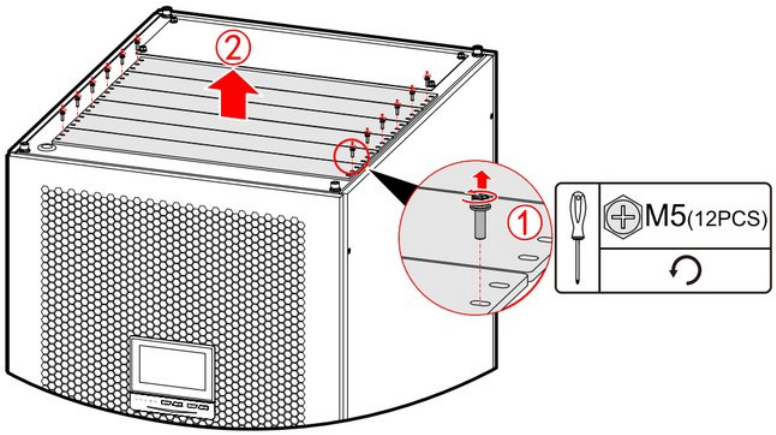

FIGURE 3-68 Remove the top cover plates

2. Crimp the mains input, output, bypass, and battery positive and negative cables onto the corresponding wiring terminals.

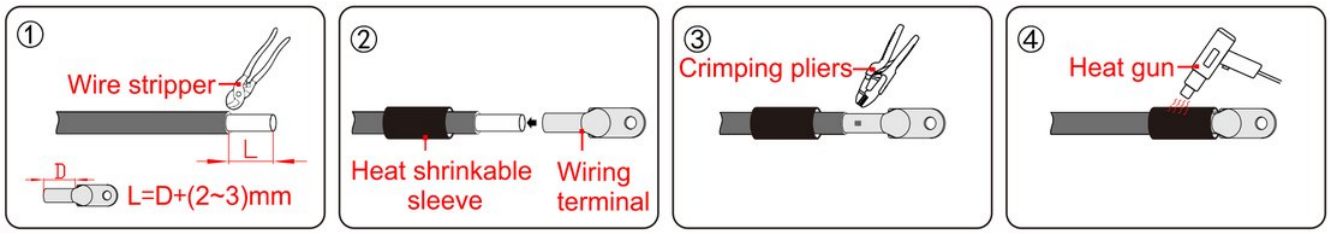

FIGURE 3-69 Cable crimping diagram

> **NOTE**
> The crimping process for each cable is the same, and the diagram above illustrates the crimping process for a single cable.

> **CAUTION**
> When stripping the cables, it is necessary to pull the cables out of the cabinet, to avoid leaving the wire skin, metal core, etc., inside the cabinet, affecting the normal operation of the device, as shown below.

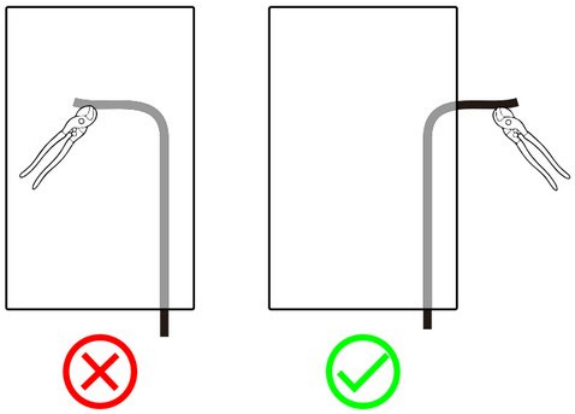

FIGURE 3-70 Stripping operation requirements

3. Connect the crimped cables to the corresponding copper bars (as shown in Figure 3-72) of the UPS, and tighten the bolts.

> **CAUTION**
> When installing UPS, it must be grounded first. When removing UPS, the grounding wire must be removed last.
>
> Battery positive and negative wires should be connected correctly and terminals connected firmly.
>
> Battery DC input requires to add a DC switch, the wiring is as shown in Figure 3-71.

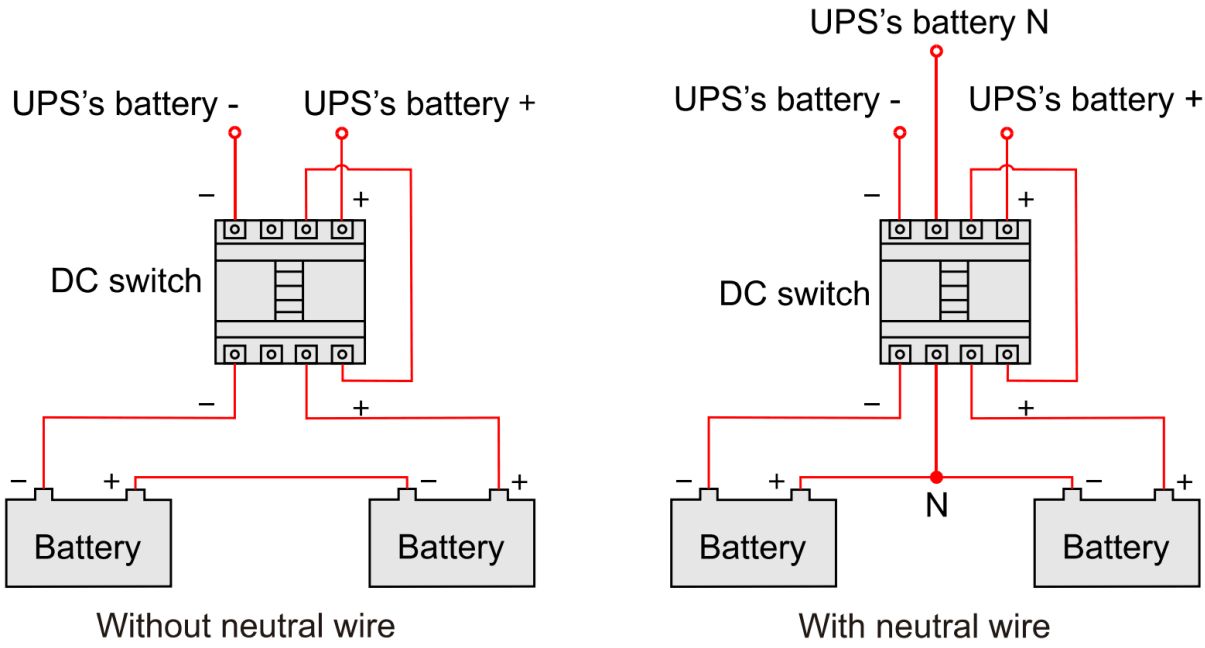

FIGURE 3-71 Battery wiring diagram

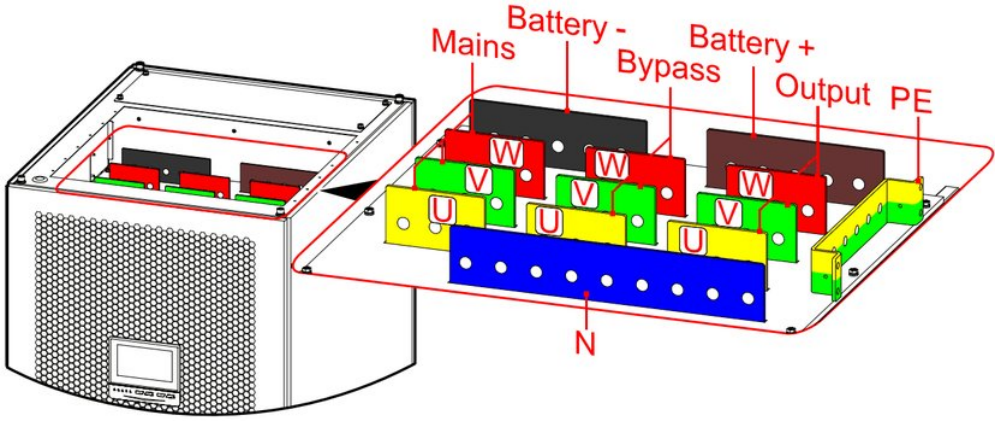

FIGURE 3-72 Wiring copper bars illustration

NOTE

- To ensure good electrical performance, during wiring, please connect the U, V, and W cables to the same side of the copper bar.
- When wiring the system, the cables must first pass through the epoxy board's cable entry hole at the top of the cabinet, and then proceed with the wiring. To implement bottom wiring, a side wiring cabinet must be selected, and a cable tray should be installed on top before proceeding with the wiring.
- For shared battery pack mode, the battery's neutral wire must pass through the cable entry hole and connect to the UPS's N busbar.
- The cable tray is provided by the customer, and the actual tray should be based on the one purchased on-site. The wiring method for the top/bottom entry of the IST6-800 is similar to the IST6-600. For details, please refer to Figure 3-58, Figure 3-59.

4 Connect the communication wires.

1. Crimp the corresponding communication wires based on the communication method.

NOTE

Dry contact communication uses tubular terminals, and the corresponding crimping is shown in Figure 3-73. Ethernet, RS485, RS232, Network, and MODBUS communications use RJ45 connectors for connection, with the corresponding crimping shown in Figure 3-74. Pin definitions for each interface are provided in the table below.

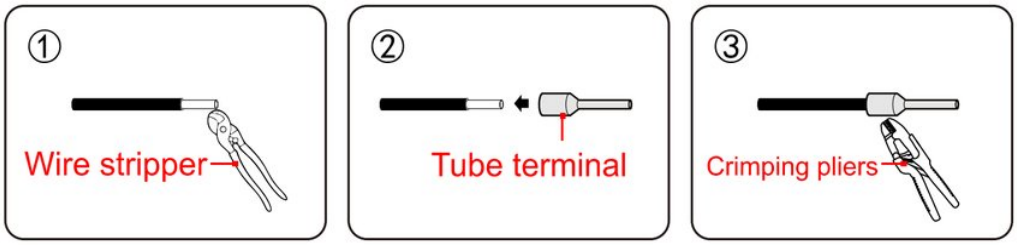

FIGURE 3-73 Wire crimping diagram of dry contact communication

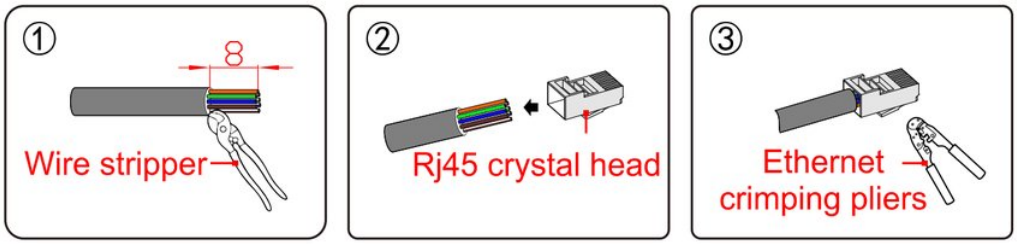

FIGURE 3-74 Wire crimping diagram of Ethernet, MODBU, RS232, RS485, Network

TABLE 3-9 Pin definitions for each interface

PIN	Ethernet	MODBUS	RS232	RS485	BMS	Network
1 (white-orange)	TX+	A	TX	A	A	TX+
2 (orange)	TX-	B	RX	B	B	TX-
3 (white-green)	RX+	Reserved	Reserved	Reserved	Reserved	RX+
4 (blue)	TERM	B	TX	B	B	TERM
5 (white-blue)	TERM	A	RX	A	A	TERM
6 (green)	RX	Reserved	Reserved	Reserved	Reserved	RX-
7 (white-brown)	TERM	5V power	5V power	Reserved	Reserved	TERM
8 (brown)	TERM	GND	GND	GND	GND	TERM

1. Plug the crimped communication wires into the corresponding communication interfaces as needed.

NOTE

The wire color and the connected ports in above figures are for illustration purpose only, the positions and descriptions of each port are detailed in section **2.4.3 System Control Box**.

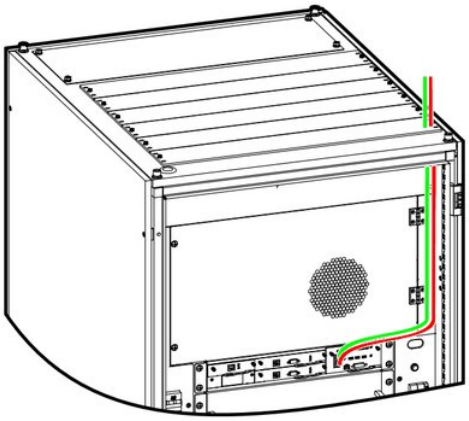

FIGURE 3-75 Connect the communications wires (top wiring)

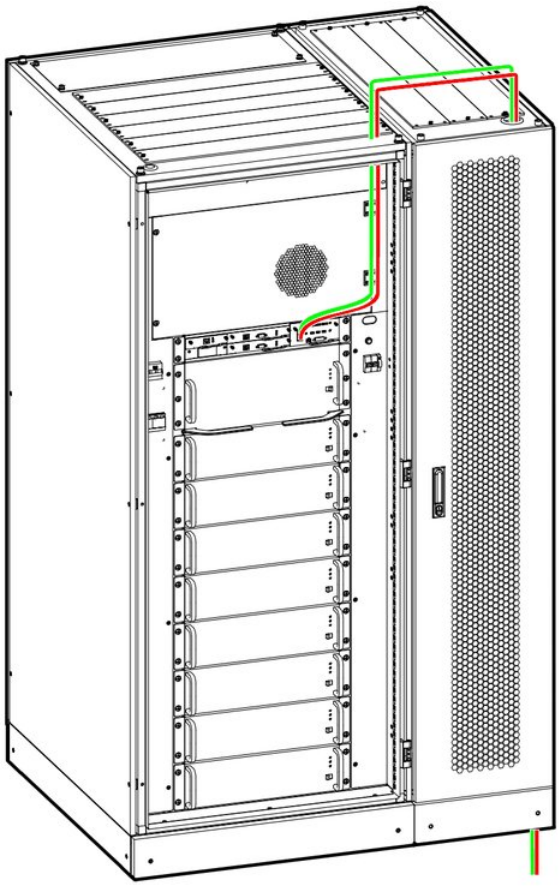

FIGURE 3-76 Connect the communications wires (bottom wiring)

5 After cutting the top cover plate according to the wiring space, reinstall them in their original position.

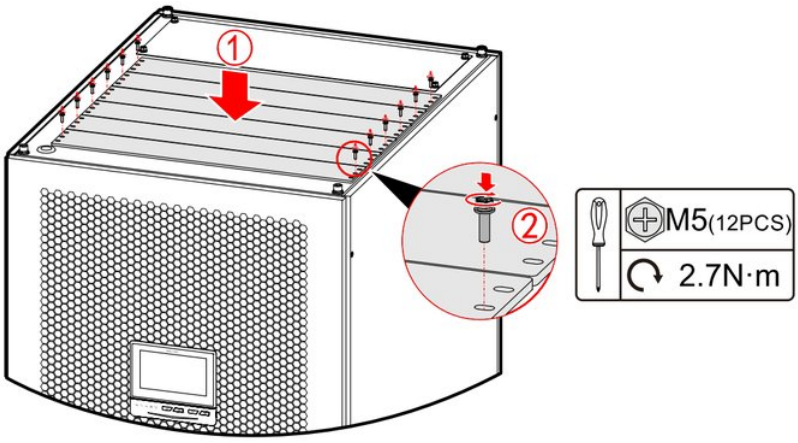

FIGURE 3-77 Install the top cover plates

6 Seal the wiring hole with sealing putty.

NOTE

The recommended sealing putty material is black flame-retardant butyl rubber patch sealing putty.

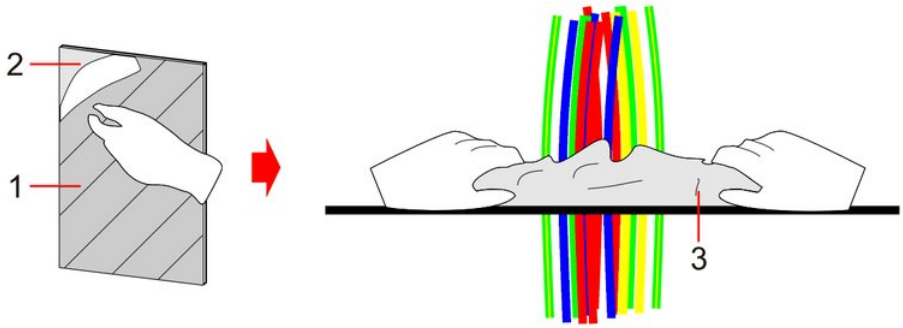

(1) Paper protection film (2) Transparent film (Do not tear off the film)
(3) Seal putty (with the transparent film facing upward)

FIGURE 3-78 Sealing putty sealing diagram

IST6-1000, IST6-1200

PROCEDURE

1. Use a key to open the front doors of the UPS.

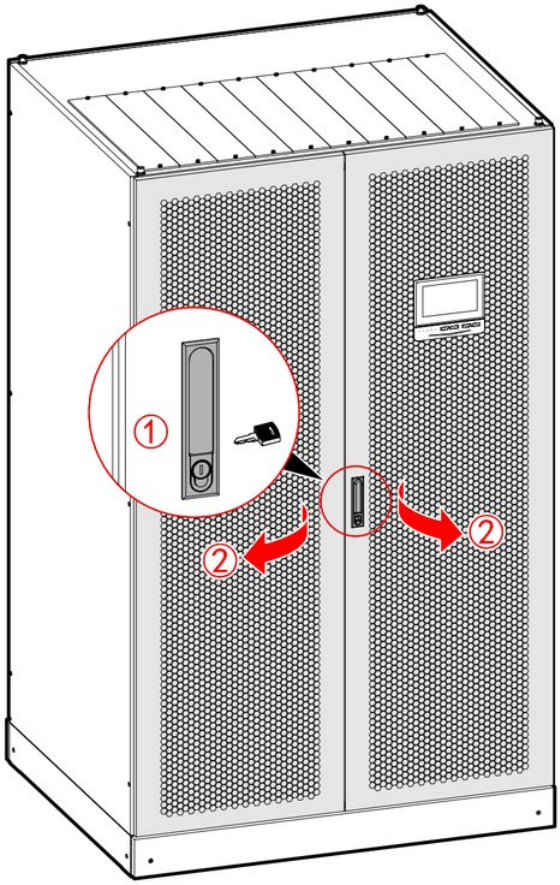

FIGURE 3-79 Open the front doors

2. Remove the front plate and top plates.

⚠ WARNING

Before connecting the cables, make sure the external mains switch, output switch, bypass switch, maintenance bypass switch, and battery switch are all in the OFF position.

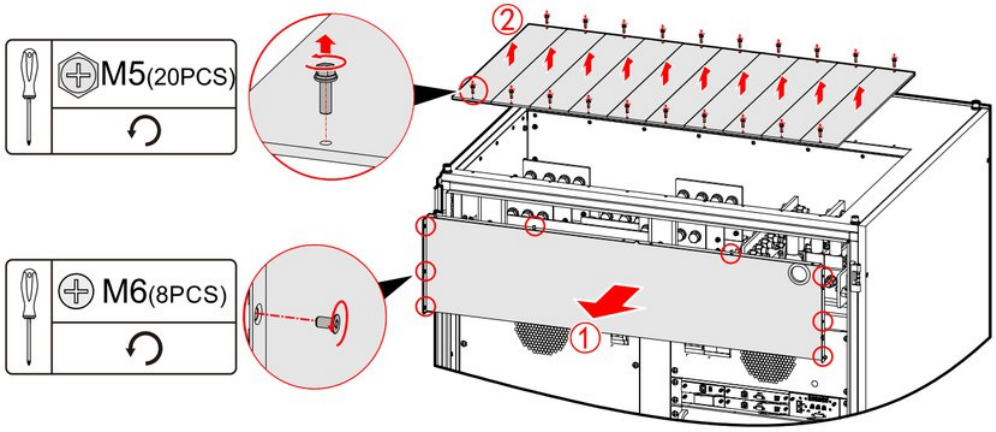

FIGURE 3-80 Dismantle the front plate and top plates

3 Crimp the mains input, output, bypass, and battery positive and negative cables onto the corresponding wiring terminals.

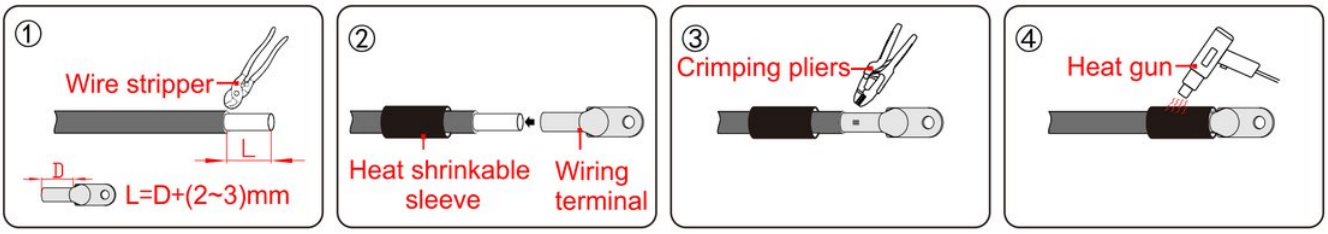

FIGURE 3-81 Cable crimping diagram

> **NOTE**
> The crimping process for each cable is the same, and the diagram above illustrates the crimping process for a single cable.

> **CAUTION**
> When stripping the cables, it is necessary to pull the cables out of the cabinet, to avoid leaving the wire skin, metal core, etc., inside the cabinet, affecting the normal operation of the device, as shown below.

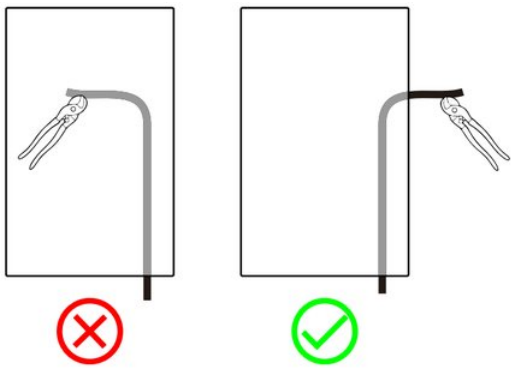

FIGURE 3-82 Stripping operation requirements

4 Connect the crimped cables to the corresponding copper bars (as shown in Figure 3-83) of the UPS, and tighten the bolts.

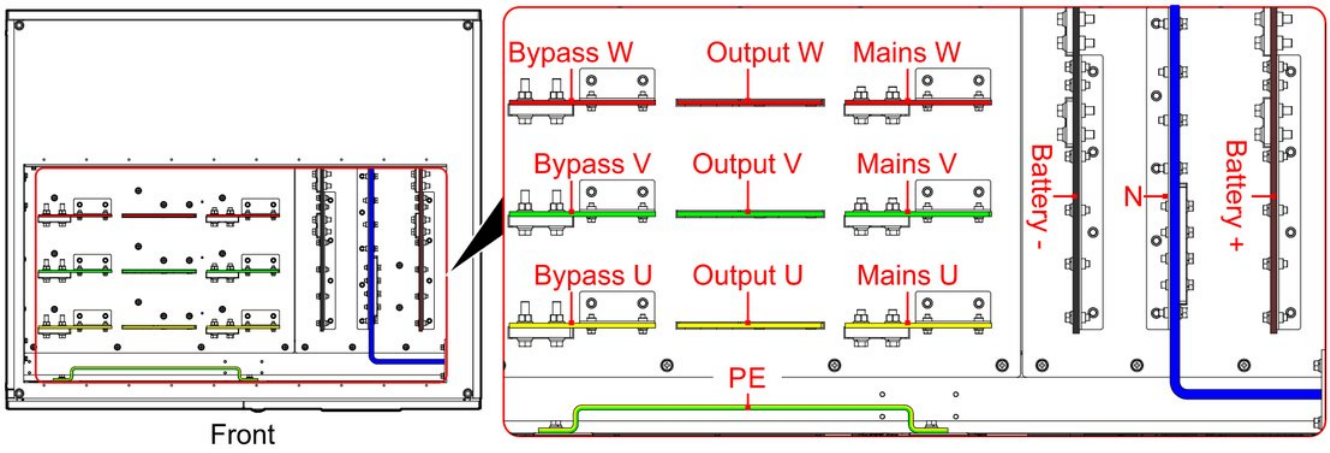

FIGURE 3-83 UPS copper bars illustration (top view)

NOTE

If the optional distribution cabinet is selected, the mains, output, bypass, PE, and neutral wires are all connected from the corresponding copper bars of the distribution cabinet, as shown in Figure 3-84. The battery +/- are still connected to the corresponding copper bars at the top of the UPS.

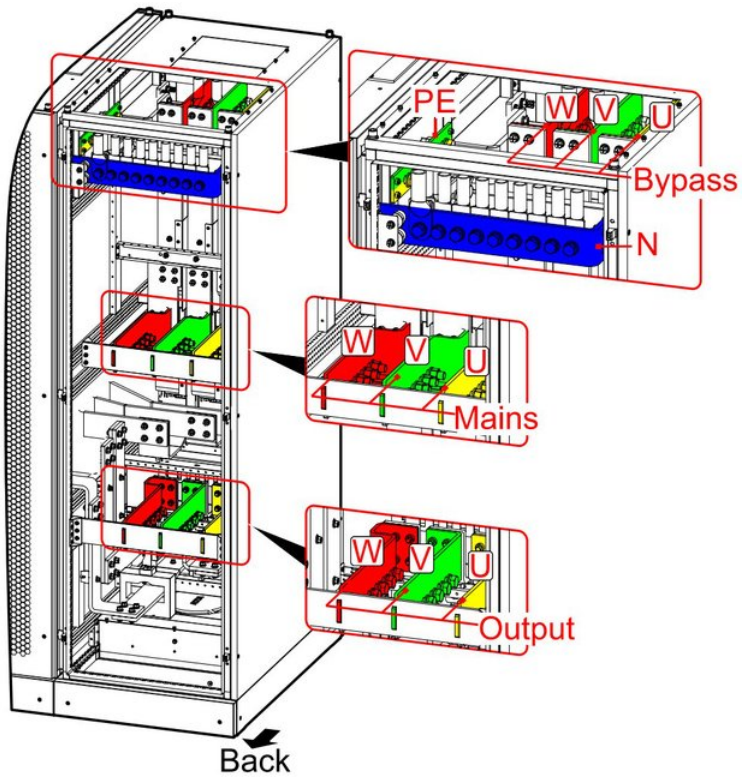

FIGURE 3-84 Distribution cabinet wiring copper bars illustration

CAUTION

When installing UPS, it must be grounded first. When removing UPS, the grounding wire must be removed last.

Battery positive and negative wires should be connected correctly and terminals connected firmly.

Battery DC input requires to add a DC switch, and the wiring is as shown in Figure 3-85.

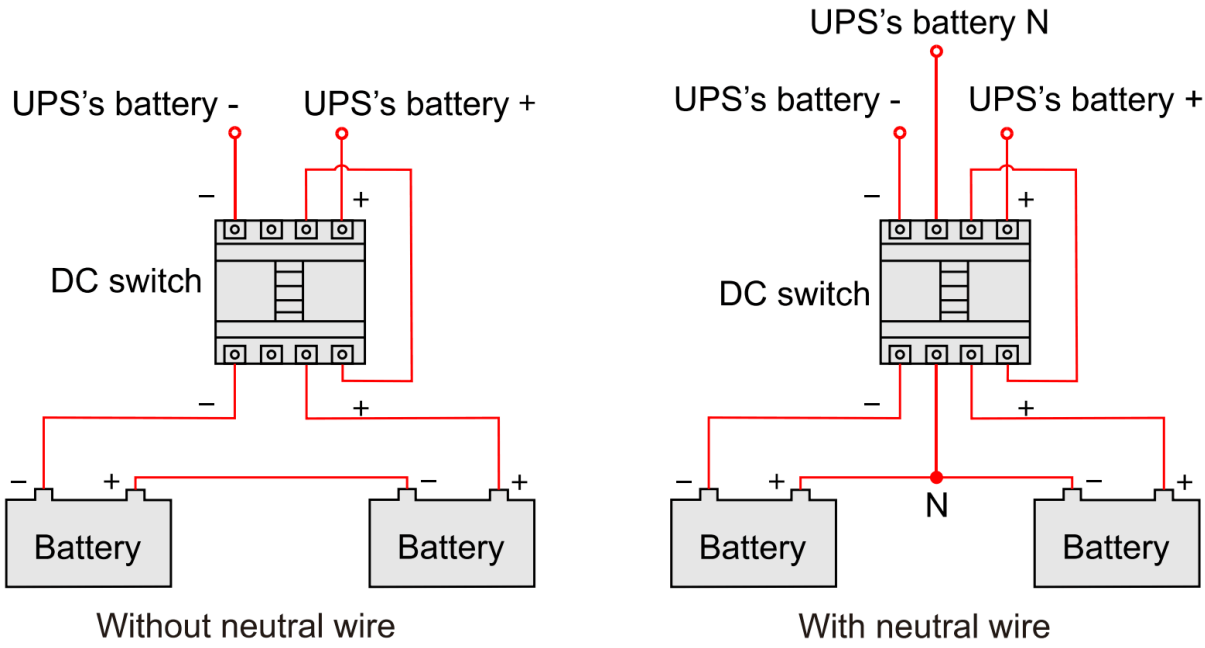

FIGURE 3-85 Battery wiring diagram

NOTE

- To ensure good electrical performance, during wiring, please connect the U, V, and W cables to the same side of the copper bar.
- When wiring the system, the cables must first pass through the epoxy board's cable entry hole at the top of the cabinet, and then proceed with the wiring. To implement bottom wiring, a side wiring cabinet must be selected, and a cable tray should be installed on top before proceeding with the wiring.
- For shared battery pack mode, the battery's neutral wire must pass through the cable entry hole and connect to the UPS's N busbar.
- The cable tray is provided by the customer, and the actual tray should be based on the one purchased on-site. The wiring method for the top/bottom entry of the IST6-1000, IST6-1200 is similar to the IST6-600. For details, please refer to Figure 3-58, Figure 3-59.

5 Reinstall the front plate and top plates.

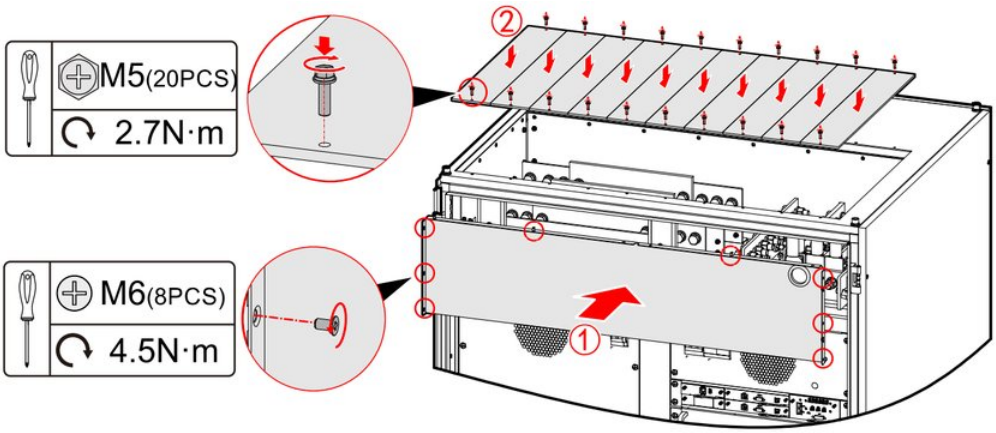

FIGURE 3-86 Install the front plate and rear plate

6 Connect the communication wires.

1. Crimp the corresponding communication wires based on the communication method.

NOTE

Dry contact communication uses tubular terminals, and the corresponding crimping is shown in Figure 3-87. Ethernet, RS485, RS232, Network, and MODBUS communications use RJ45 connectors for connection, with the corresponding crimping shown in Figure 3-88. Pin definitions for each interface are provided in Table 3-10.

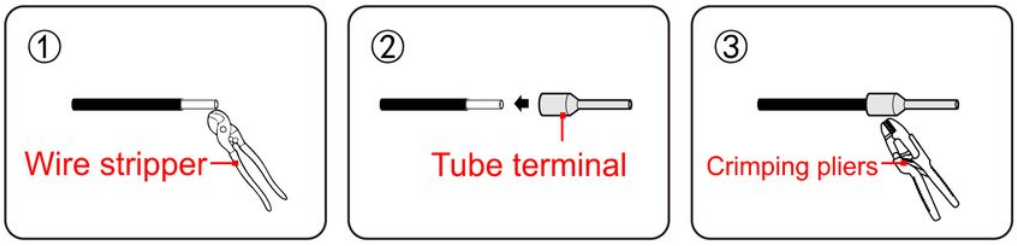

FIGURE 3-87 Wire crimping diagram of dry contact communication

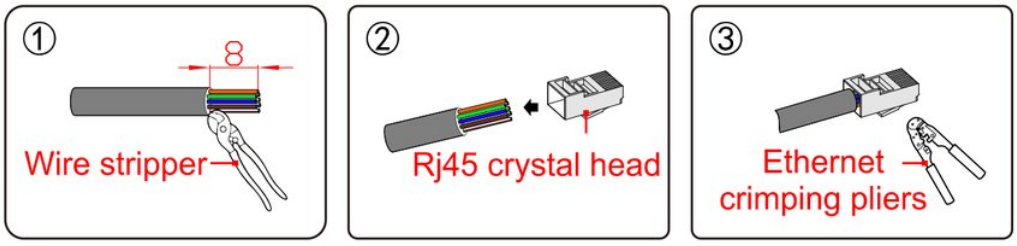

FIGURE 3-88 Wire crimping diagram of Ethernet, MODBU, RS232, RS485, Network

TABLE 3-10 Pin definitions for each interface

PIN	Ethernet US	RS232	RS485	BMS	Network
1 (white-orange)	TX+ A	TX	A	A	TX+
2 (orange)	TX- B	RX	B	B	TX-
3 (white-green)	RX+ ed	Reserved	Reserved	Reserved	RX+
4 (blue)	TERM B	TX	B	B	TERM
5 (white-blue)	TERM A	RX	A	A	TERM
6 (green)	RX ed	Reserved	Reserved	Reserved	RX-
7 (white-brown)	TERM 5V wer	5V power	Reserved	Reserved	TERM
8 (brown)	TERM GND	GND	GND	GND	TERM

1. Punch through the knockout hole at the top right corner, and trim the top cover plate and reinstall it in place. Then plug the crimped communication wires into the corresponding communication interfaces as needed.

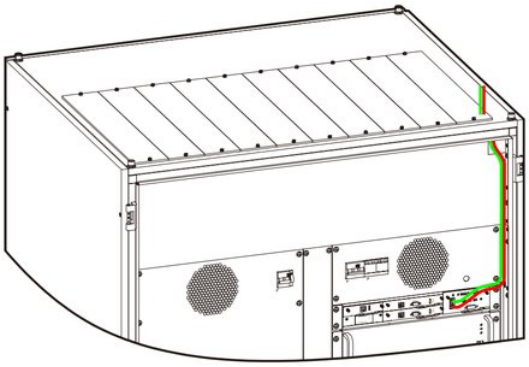

FIGURE 3-89 Connect the communications wires (top wiring)

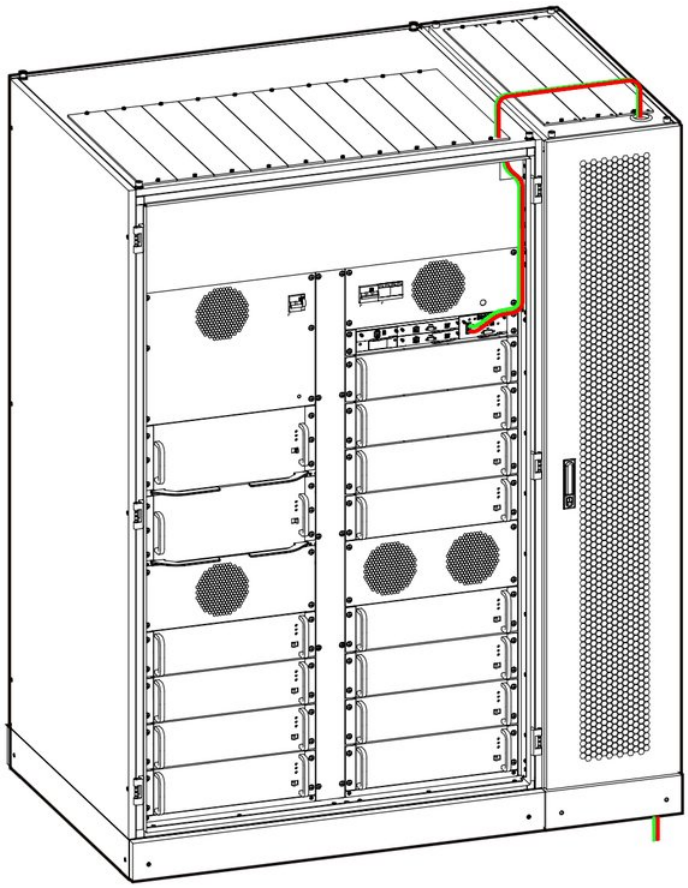

FIGURE 3-90 Connect the communications wires (bottom wiring)

> **NOTE**
> The wire color and the connected ports in above figures are for illustration purpose only, the positions and descriptions of each port are detailed in section **2.4.3 System Control Box**.

7. Close the front door.
8. Seal the wiring hole with sealing putty.

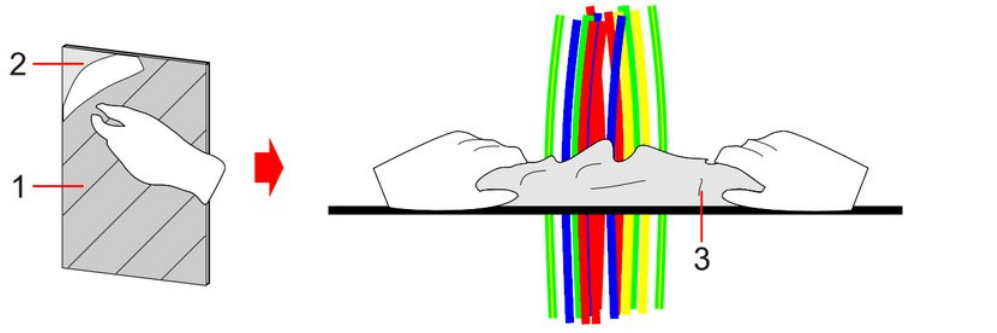

(1) Paper protection film (2) Transparent film (Do not tear off the film)
(3) Seal putty (with the transparent film facing upward)

FIGURE 3-91 Sealing putty sealing diagram

> **NOTE**
> The recommended sealing putty material is black flame-retardant butyl rubber patch sealing putty.

3.7.3 Parallel System Connection

Install the battery pack and UPS in the parallel system independently, and then connect the parallel kit.

CAUTION

THE MAINS INPUT PHASE SEQUENCE CANNOT BE CONNECTED REVERSELY, OTHERWISE, THE UPS WILL NOT OPERATE PROPERLY.

- The AC input connection method and phase sequence of each UPS in the parallel system should be strictly consistent to ensure that the bypass power supply of the parallel system is in the same phase.
- Before powering on each UPS, check that the phases of the input three phases of UPS correspond one to one.

PROCEDURE

1. Follow **Step 1**, **Step 2**, and **Step 3** in **3.7.2 UPS Connection** to perform the operation.
2. Connect the mains input of each UPS to the same grid.
3. Connect the bypass input of each UPS to the same grid.
4. Connect the output of each UPS to load or output distribution cabinet.

CAUTION

In the parallel system, the length of bypass/output cables connected to different UPSs should be essentially consistent.

5. Connect the battery input of each UPS to the corresponding battery pack.
6. Connect the parallel ports of each UPS in the parallel system via parallel wires, and fasten the parallel port screws. For details, see **3.6.3 Parallel/BSC Kit Installation**.

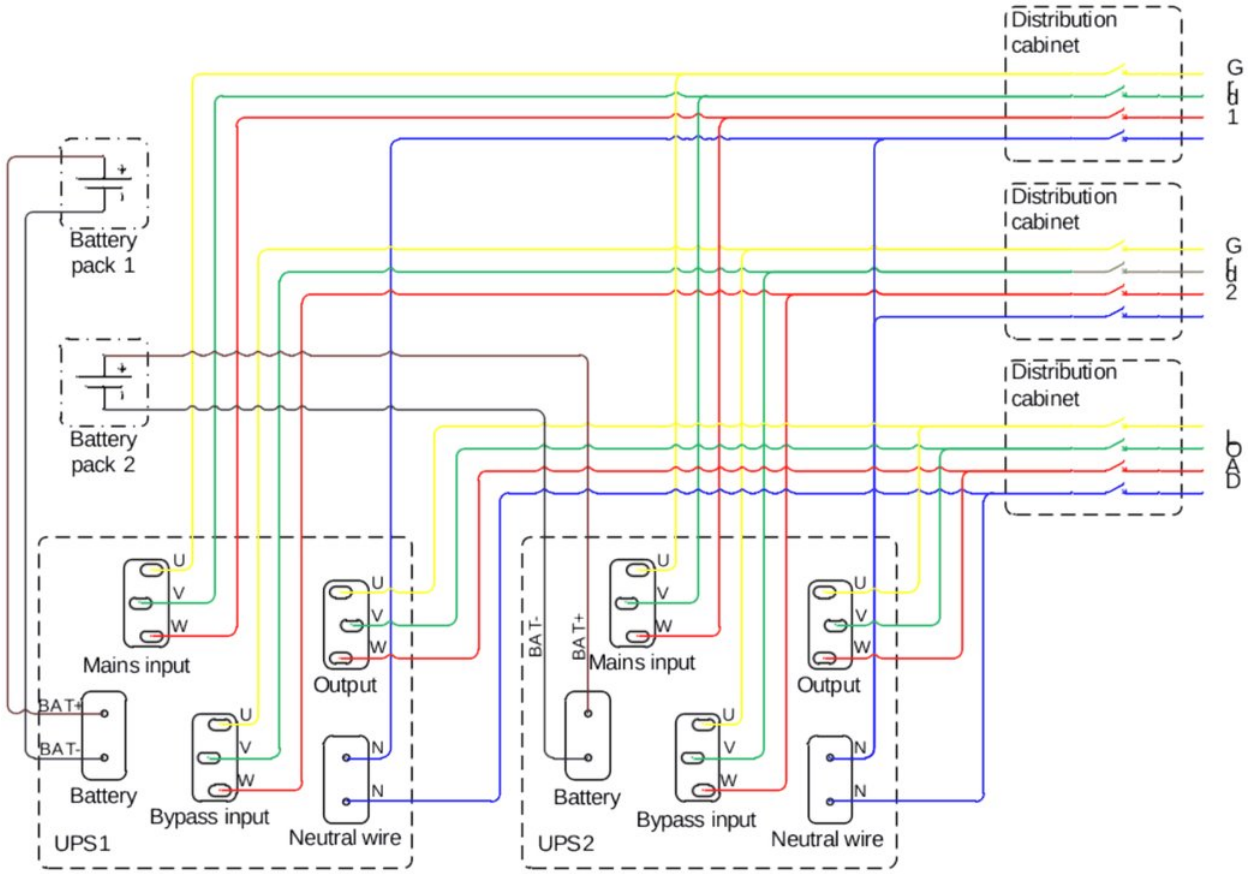

FIGURE 3-92 Parallel system wiring diagram

> **NOTE**
> The above figure is only for wiring reference. Please make the wiring according to the actual position of the wiring copper bars.

3.8 Check the Installation

No.	Check item	Result
1	Check if the color of AC wires is in accordance with the specification.	Yes☐ No☐
2	Check if the UPS wiring is not loose.	Yes☐ No☐
3	Check if wires are stably connected.	Yes☐ No☐
4	Check if the cabinet grounding is good.	Yes☐ No☐
5	Check if there is a short circuit between the live wire and the live wire, or between the live wire and the neutral wire, or between the live wire and the grounding wire in the UPS input. And also check if there is a short circuit in the UPS output.	Yes☐ No☐
6	Check if the polarity and sequence of battery wires are correct.	Yes☐ No☐
7	Check if the labels on wires are correct.	Yes☐ No☐
8	Check if the wiring is neat and if the wiring binding is in accordance with the technical specifications	Yes☐ No☐
9	Check if the installation and wiring of the device are conducive to future system renovation, expansion, and maintenance.	Yes☐ No☐
10	Check if there are foreign bodies in the cabinet, such as behind the module, on the top of the cabinet, terminals, and switches.	Yes☐ No☐
11	Check if the cabinet is installed stably and firmly.	Yes☐ No☐

CHAPTER 4

04 Operation Guide

IN THIS CHAPTER

4.1 Single UPS Operation
4.2 Parallel System Operation
4.3 BSC System Operation

4.1 Single UPS Operation

4.1.1 Check Before Power-on

TABLE 4-1 Check before power-on

No.	Check item	Check result
1	The mains switch, bypass switch, output switch, and maintenance bypass switch, external battery switch of UPS are all in the OFF position.	Normal Abnormal
2	Check the load type, status and capacity. • Ensure that the load is non-inductive load. The UPS output cannot be connected with inductive load, such as motor, fan, air-conditioner, which is directly powered by grid. • Ensure that the load is switched off. At the same time, the load capacity should not exceed the rated output capacity of UPS, otherwise it will cause the system overload protection.	Normal Abnormal
3	There is no short circuit between the live wire and the neutral wire, or between the live wire and the grounding wire in the UPS input. Ensure that there is no short circuit in the UPS output.	Normal Abnormal
4	Use a multimeter to check the AC voltage at the UPS mains input terminals. The voltage should be within the range of 187V to 280V, otherwise, the UPS can only be started using the battery.	Normal Abnormal
5	Use a multimeter to check the frequency at the UPS mains input terminals. The frequency should be within the range of 40Hz~60Hz (50Hz system) or 50Hz~70Hz (60Hz system), otherwise, the UPS can only be started using the battery.	Normal Abnormal
6	Use a multimeter to check the DC voltage at the UPS battery input terminals. The battery's positive voltage should be greater than a certain value (+11.5× number of battery cells), and the battery's negative voltage should be less than a certain value (-11.5 × number of battery cells). Also, pay attention to the battery polarity to prevent	Normal Abnormal
No.	**Check item**	**Check result**
	incorrect battery connection.	
7	The battery switch auxiliary contact has been connected to one of the input dry contacts of the system monitoring card as required, and the "Input dry contact" item has been set in "Setting manage >Dry Contact>Input" on the touch screen.	Normal Abnormal

4.1.2 Startup

PROCEDURE

1. Set the ready switches of the bypass module and all power modules to status.

2. Switch on the bypass switch, mains switch, and external battery switch in sequence. The UPS will output via bypass. (If the UPS needs to be cold started, this step only requires closing the external battery switch, then press and hold the battery cold start button on the UPS for more than 3 seconds to establish the UPS power.)

After the UPS is powered on, the touch screen will start to run. Enter the startup password, and the system will enter the home page.

3. Tap the icon on the home page of the touch screen to check if there are any fault alarms in the system. If there are, pause the operation and contact AEC technical support for on-site assistance until all fault alarms are cleared.

4. Power on the inverter.

Wait until the run indicators of all power modules turn green and flash slowly, then perform the inverter power-on operation.

- Power-on method 1: **ON** combination button on the operation panel

Press the **ON** combination button on the operation panel for 3 seconds.

- Power-on method 2: Touch screen

On the home page, tap the icon to enter the inverter power-on page, and then tap **OK** button.

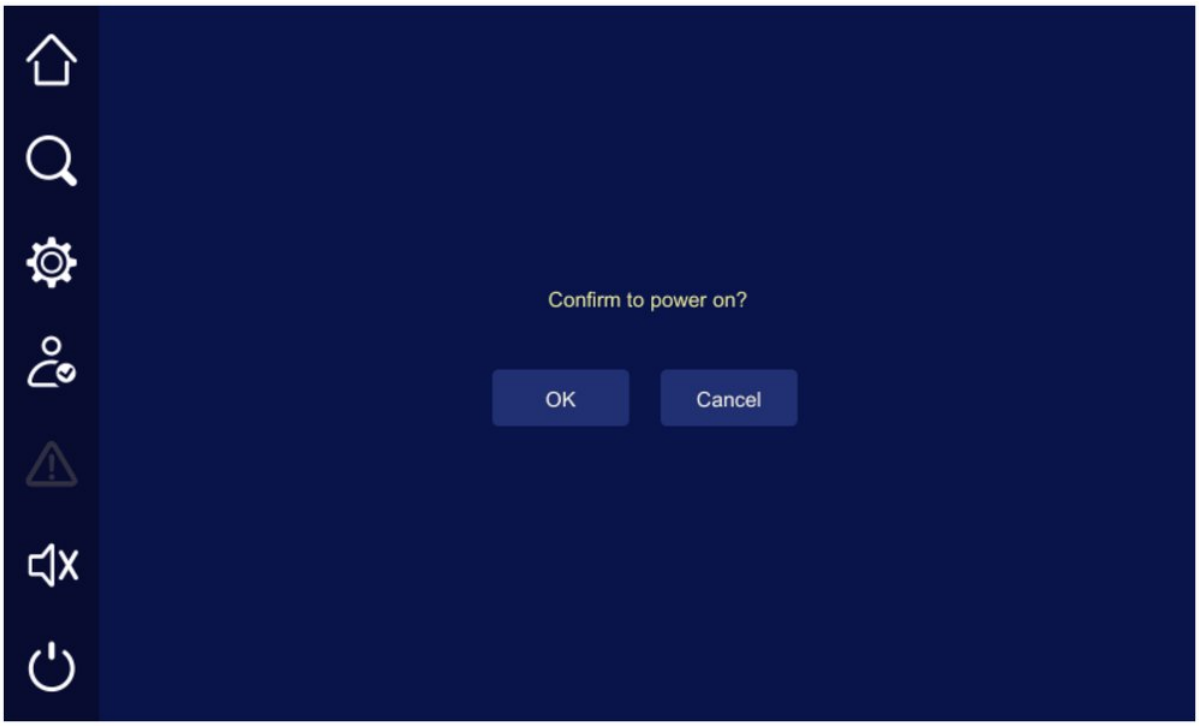

FIGURE 4-1 Inverter power-on page

The inverter indicator on the operation panel will light up green, about 10 seconds later, the inverter will be fully started, and the bypass indicator will turn off. The system will switch from bypass output mode to inverter output mode.

5. After the inverter is powered on, check the home page of the touchscreen to confirm whether the system has switched to inverter output mode. During commissioning, tap the icon on the home page of the touch panel to confirm whether the three-phase output voltage and frequency of UPS are normal.

6. Switch on the external output switch, and use a multimeter to test the output three-phase voltage. Confirm that the inverter output voltage (three-phase output voltage = system voltage ± 2V) and inverter output frequency (three-phase output frequency = system frequency ± 0.1Hz) are normal.

7 Connect user equipment loads. Generally, start high-power loads first, followed by low-power loads.

4.1.3 Shutdown

CAUTION

If the bypass is normal, the system will turn to the bypass mode after the inverter is shut down. If the bypass is abnormal, the system will enter no-output mode after the inverter is shut down. Before powering off the inverter, please ensure that the loads have been turned off and can withstand a power outage at any time.

PROCEDURE

1 Turn off the user load.

2 Power off the inverter.

- Power-off method 1: **OFF** combination button on the operation panel

Press the **OFF** combination button on the operation panel for 3s.

- Power-off method 2: Touch screen

On the home page, tap the icon to enter the inverter power-off page, then tap the **OK** button.

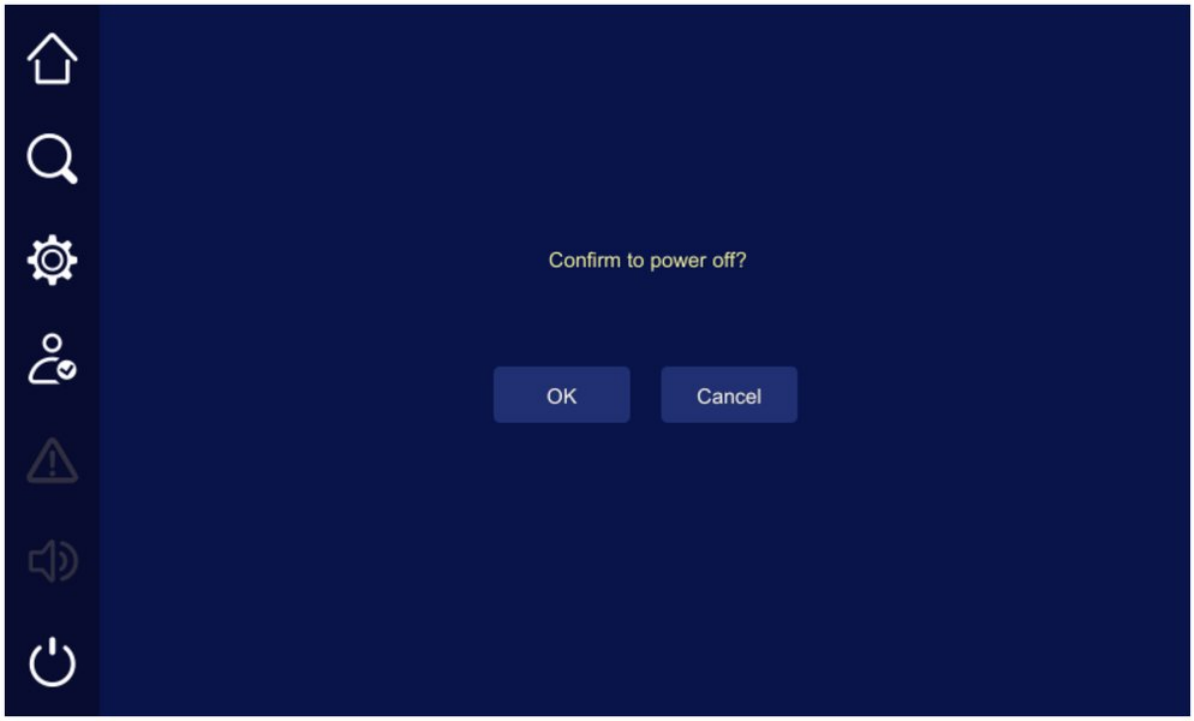

FIGURE 4-2 Inverter power-off page

The inverter indicator on the operation panel will turn off, and the bypass indicator will light up green. The system will switch from inverter output mode to bypass output mode.

3 After the inverter is powered off, if the bypass is normal, the system will enter to the bypass mode. If the bypass is abnormal, the system will enter no-output mode, causing a power outage to the load.

4 Switch off all the external switches (battery switch, mains switch, bypass switch and output switch) of UPS in sequence.

NOTE

If the distribution cabinet is optionally equipped, the switch inside the distribution cabinet also needs to be switched off.

5 Wait until the touch screen and LED indicators on the operation panel are off, and UPS shuts down completely.

4.1.4 Emergency Power Off

CAUTION

Do not perform EPO operation unless it is an emergency.

Short-circuit NO and COM of EPO1 or disconnect NC from COM of EPO2 (for details about EPO2 trigger operations, see Table 2-10 **System monitoring card**) to trigger the system EPO, and UPS enters the emergency power off status. At this time, the touch screen displays EPO protection, and the buzzer keeps beeping.

CAUTION

- After triggering the EPO, the UPS will have no output, and the load will experience a power outage.
- When the system is in maintenance bypass mode, UPS still has output after the EPO is triggered.

4.1.5 Clear the EPO Status

PROCEDURE

1 Check if the dry contact EPO1/EPO2 on the system monitoring card is in a non-emergency power off status.

2 Switch off the external battery switch, mains switch, bypass switch and output switch of UPS one by one. Wait until the touch screen and LED indicators on the operation panel are off, and UPS shuts down completely.

NOTE

If the distribution cabinet is optionally equipped, the switch inside the distribution cabinet also needs to be switched off.

3 Refer to **4.1.2 Startup** to restart UPS, and the EPO is removed.

4.2 Parallel System Operation

4.2.1 Check Before Power-On

TABLE 4-2 Check before power-on

No.	Check item	Check result
1	The external mains switch, bypass switch, output switch, battery switch and maintenance bypass switch of each UPS are all in off position.	Normal Abnormal
2	Check the load type, status and capacity. • Ensure that the load is non-inductive load. Each UPS output cannot be connected with inductive loads, such as motor, fan, air-conditioner, which is directly powered by grid. • Ensure that the load is switched off (i.e. the external load total output switch is off). At the same time, the load capacity should not exceed the rated output capacity of each UPS, otherwise it will cause the system overload protection.	Normal Abnormal
3	There should be no short circuits between the live wires and the neutral wires, or between the live wires and the grounding wires in the input of each UPS. Additionally, ensure that there is no short circuit in the output of each UPS.	Normal Abnormal
4	Use a multimeter to measure the AC voltage on the mains input terminals of each UPS. The voltage should be within the range of	Normal Abnormal
No.	**Check item**	**Check result**
	187V to 280V, otherwise each UPS can only be started by battery.	
5	Use a multimeter to measure the frequency on the mains input terminals of each UPS. The frequency should be within the range of 40Hz~60Hz (50Hz system) or 50Hz~70Hz (60Hz system), otherwise, only batteries can be used to start each UPS.	Normal Abnormal
6	Use a multimeter to measure the DC voltage at the battery input terminals of each UPS. The battery's positive voltage should be greater than a certain value (+11.5 × number of battery cells), and the negative battery pack voltage should be less than a certain value (-11.5 × number of battery cells). Pay attention to the battery polarity to prevent incorrect battery wiring. If there are multiple battery packs, use a multimeter to measure the voltage at each battery pack switch, and then measure the total switch voltage between the battery pack and UPS.	Normal Abnormal
7	The battery switch auxiliary contact has been connected to one of the input dry contacts of the system monitoring card of each UPS as required, and the "Input dry contact" item has been set in "Setting manage >Dry Contact>Input" on the touch screen.	Normal Abnormal

4.2.2 Start Parallel System

PROCEDURE

1. Confirm that the parallel kit has been installed and connected according to **3.6.3 Parallel/BSC Kit Installation**.
2. Set the ready switch of the bypass module and all power modules to status. Switch on the mains switch and bypass switch of each UPS one by one.

After each UPS is powered on, the touch screen starts to run. After entering the power-on password, the home page is displayed.

3. Tap the icon on the home page of the touch screen, set "Parallel mode" in "Cabinet setting> Mode manage" of each UPS to "Parallel". Then select any UPS and set "Parallel address" to 1, select another UPS and set "Parallel address" to 2, and so on. Until each UPS in the parallel system has a number.

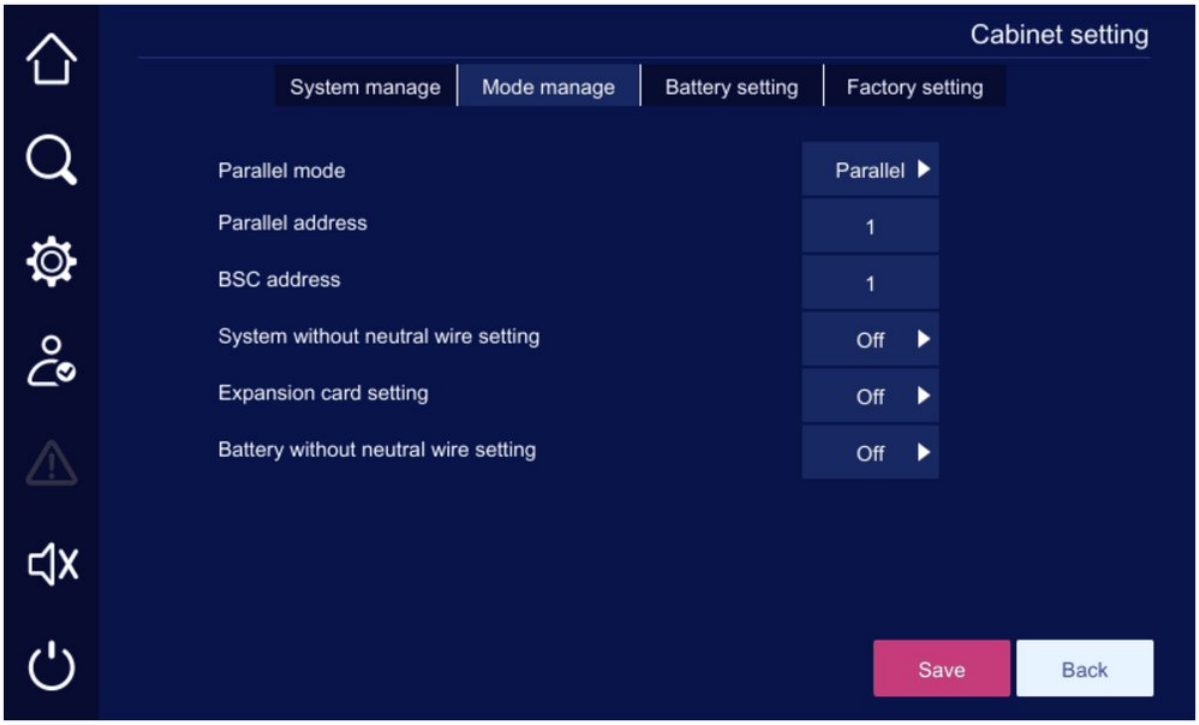

FIGURE 4-3 Parallel mode and parallel address setting

4. Switch on the external battery switch of each UPS (If there are multiple battery packs, switch on the switch of each battery pack first, and then switch on the total switch between the battery pack and the UPS.) Check if the battery is connected properly (the "Battery circuit abnormal" alarm disappears on the home page of the touch screen within 2 minutes).
5. Tap the icon on the home page of the touch screen of each UPS to check if there are any fault alarms on the system. If yes, stop the operation and contact AEC technical support for on-site assistance until all fault alarms are cleared.
6. Power on the inverter of each UPS.

After confirming that all UPS units are in bypass output mode and there are no alarms, proceed to start the inverters of all UPS units (for details, refer to **Step 4** in section **4.1.2 Startup**). All UPS units will transition from bypass output mode to inverter output mode.

⚠ CAUTION

Do not directly switch on the external output switches of each UPS. Maintain all output switches off and follow the steps below to continue the operation. This precaution is necessary to prevent circulating currents caused by output voltage deviations, which could damage the equipment.

7. Measure the output voltage and frequency of each UPS.

- After the inverter of each UPS are powered on, check if the system switches to the inverter

mode on the home page of the touch panel. During commissioning, tap the icon on the home page of the touch panel to check if the three-phase output voltage and frequency of each UPS are normal.

- Measure the output three-phase voltage via a multimeter to check if the inverter output voltage (three-phase output voltage = system voltage ± 2V) and inverter output frequency (three-phase output frequency = system frequency ± 0.1Hz) are normal. And record the RMS value of the three-phase output voltage of each UPS tested via a multimeter.

8 Compare the output voltage of each UPS. Ensure the RMS value difference of three-phase voltage of any two UPSs is less than 5V before the two UPSs work in parallel. If the conditions are not met, UPS with large voltage deviation cannot be paralleled into the system, commission that UPS again on its own (consult AEC technical support).

9 Power off the inverter of each UPS (see the **Step2** of **4.1.3 Shutdown**), and each UPS switches from inverter mode to bypass mode.

10 Check the bypass phase sequence.

1. Switch on the output switch of UPS with parallel address 1 and keep the output switch of other UPSs off (Ensure that the total output switch of the external load is off. Otherwise, when the output switch of UPS with parallel address 1 is switched off, it will supply power to load.).
2. Set the multimeter to AC voltage, connect one pen to the front U of output switch of UPS with parallel address 2, and connect the other pen to the rear U of output switch of UPS with parallel address 2, measure the voltage difference between the front and rear of output switch of UPS with parallel address 2, and test the V and W of output switch of UPS with parallel address 2 in the same way. If the phase sequence is correct, the voltage difference of each phase is less than 5V. If the phase sequence is incorrect, there is at least one phase with a voltage difference greater than 5V.
3. Check whether the bypass phase sequence of each UPS in parallel system is correct based on the above method (When check the phase sequence of each UPS, there is no need to operate the switch again, keep the output switch of UPS with parallel address 1 on, and the output switches of other UPSs off).
4. If the bypass phase sequence of each UPS is correct, perform the next step. If the phase sequence of any UPS is incorrect, power down the system, and check if the bypass input and output wires of each UPS are connected correctly.

11 Switch on the output switches of each UPS.

When there has no alarm for each UPS, switch on the output switches of each UPS one by one to ensure that all UPS outputs are in parallel.

12 Power on the inverter of each UPS.

When each UPS is in the bypass mode and there has no alarm for each UPS, power on the inverter of each UPS (see the **Step4** of **4.1.2 Startup**), and each UPS switches from bypass output mode to inverter output mode.

13 Power off the inverter of each UPS (see the **Step2** of **4.1.3 Shutdown**), and each UPS switches from inverter output mode to bypass output mode.

14 Switch on the total output switch of the external load.

When the parallel system switches to bypass power supply, switch on the total output switch of the external load, system bypass supplies power for load.

15 Power on the inverter of each UPS.

When each UPS is in the bypass output mode and there has no alarm for each UPS, power on the inverter of each UPS (see the **Step4** of **4.1.2 Startup**), and each UPS switches from bypass output mode to inverter output mode.

4.2.3 Shut Down Parallel System

⚠ CAUTION

If the bypass is normal, the system will turn to the bypass mode after the inverter powers off. If the bypass is abnormal, system will have no output after the inverter powers off. Before powering off inverter, please ensure that the load is switched off and can withstand the power failure at any time.

PROCEDURE

1 Switch off all loads in parallel system, and keep the parallel system running without load for a while for heat dissipation.

2. Power off the inverter of each UPS (see the **Step2** of **4.1.3 Shutdown**), and each UPS switches from inverter mode to bypass mode.
3. Switch off the external battery switch, mains switch, bypass switch, total output switch of the external load, and external output switches of each UPS, one by one.

> **NOTE**
> If the distribution cabinet is optionally equipped, the switch inside the distribution cabinet also needs to be switched off.

4. Wait for the touch screen and LED indicators on the operation panel are completely off, which indicates that the parallel system has been fully shut down.

> **NOTE**
> - If only inverter shutdown is required and the system switches to bypass power supply without interrupting the load, only **Step 2** is needed.
> - If the entire parallel system needs to be completely shut down, the complete operation steps mentioned above must be followed.
> - If you need to exit the parallel mode, first perform inverter shutdown, switch the system to bypass power supply, and then disconnect the parallel wires.

4.2.4 Emergency Power Off

> **CAUTION**
> Do not perform EPO operation unless it is an emergency.

For detailed instructions on the Emergency Power Off (EPO) trigger method, please refer to section **4.1.4 Emergency Power Off**.

> **NOTE**
> Set "EPO linkage" in "Setting manage > Smart mode > Other modes" on the touch screen. When the "EPO linkage" is set to "On", if any UPS EPO is triggered, the parallel system will be shut down and all outputs will be turned off. When the "EPO linkage" is set to "Off", if any UPS EPO is triggered, only the output of this UPS will be turned off. This function is set by AEC technical support.

4.2.5 Clear the EPO Status

PROCEDURE

1. Check if the dry contacts EPO1/EPO2 on all system monitoring cards of parallel system are in a non-emergency power off status.
2. Switch off the external battery switch, mains switch, bypass switch and output switch of each UPS one by one, until all the touch screens and LED indicators on the operation panel are completely off, indicating that all UPS units are fully powered down.

> **NOTE**
> If the distribution cabinet is optionally equipped, the switch inside the distribution cabinet also needs to be switched off.

3. Refer to section **4.2.2 Start Parallel System** to restart the parallel system, and remove the EPO.

4.3 BSC System Operation

The BSC system operation and parallel system operation are basically the same except for the BSC system setting, as detailed in section **4.2 Parallel System Operation**.

> **NOTE**
>
> BSC system setting: Tap the  icon on the home page of the touch screen, set "Parallel mode" in the "Cabinet setting> Mode manage" of each UPS to "BSC". Then select any UPS and set "BSC address" to 1, select another UPS and set "Parallel address" to 2, and so on. Until each UPS in the BSC system has a number.

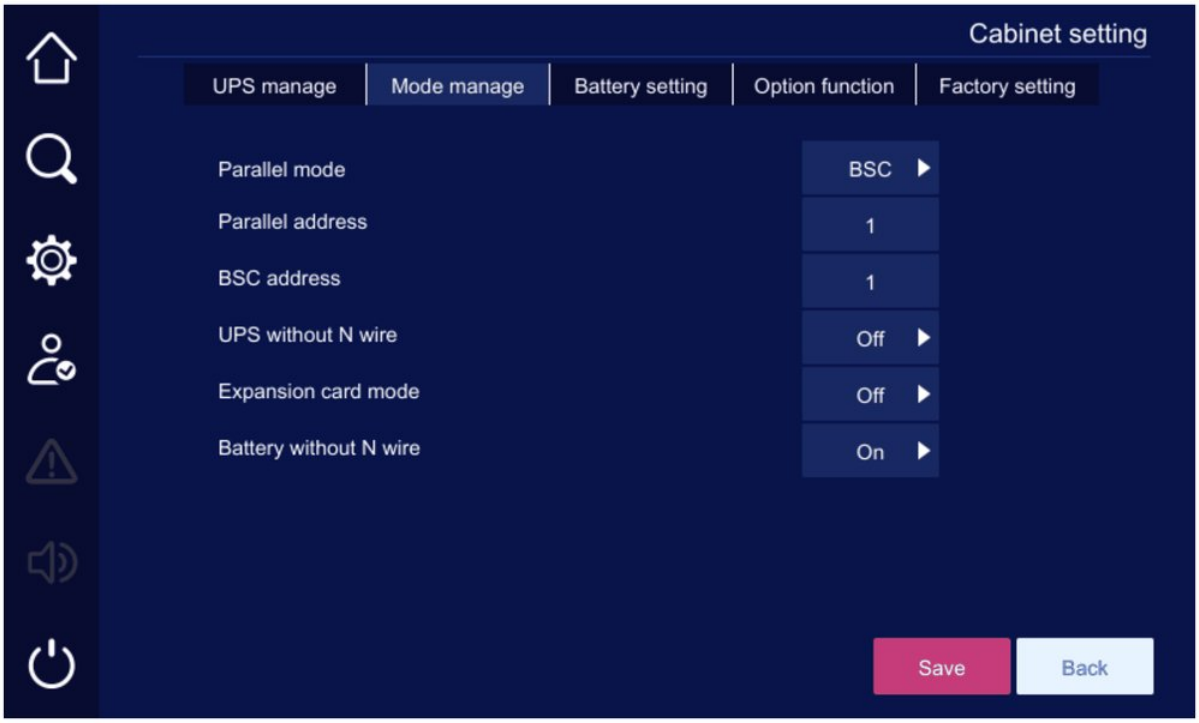

FIGURE 4-4 BSC system setting

CHAPTER 5

05 Touch Screen Operation

IN THIS CHAPTER

5.1 Menu Hierarchy
5.2 Home Page
5.3 System Working Status
5.4 Buzzer Control
5.5 Home Page
5.6 Info Manage
5.7 Setting Manage
5.8 Inverter ON/OFF

NOTE

The parameter values and other details in the pictures in this chapter are for illustration only. The actual parameters are subject to the touch screen display of the received product.

5.1 Menu Hierarchy

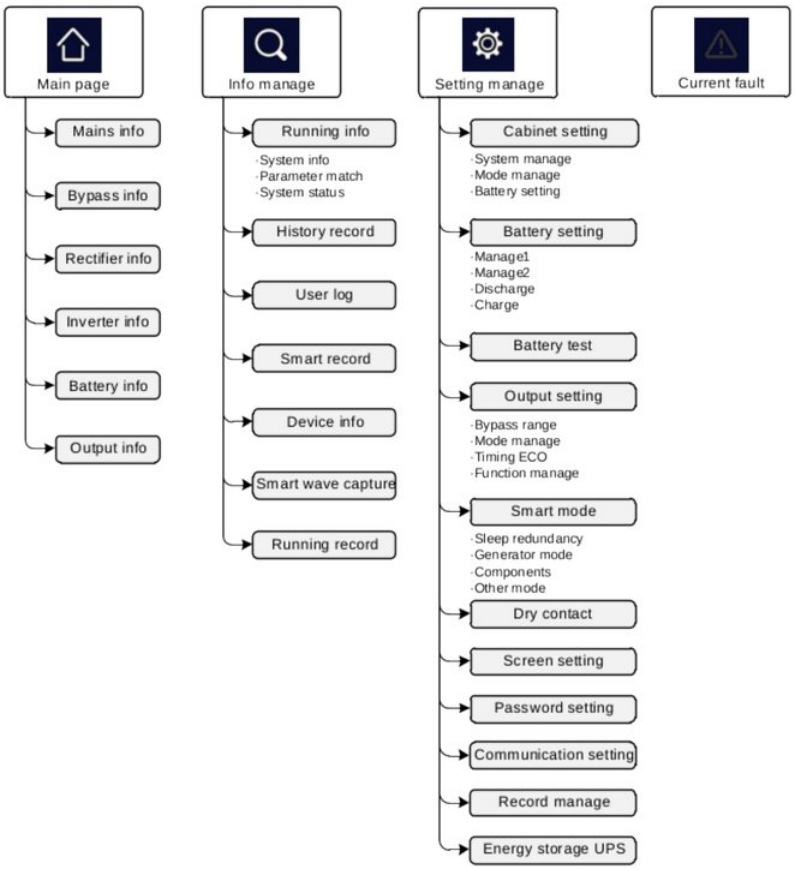

FIGURE 5-1 Menu hierarchy of touch screen

WARNING

The touch screen contains parameters related to the operation of the equipment. All parameter modifications should be performed by authorized professionals. For any parameter that is unclear, refer to this manual or consult AEC technical support; do not change parameters without permission.

Panel, indicators and touch screen: quick guide

The inverter is started and stopped with the ON and OFF button pairs (both buttons held together for 3 s) or from the ON/OFF page of the touch screen. The status indicator shows the state from across the room.

AT A GLANCE **Status indicator**

Blue	Blue, flashing	Yellow	Red
UPS working normally	Battery mode	Alarm: the UPS is still operating	Fault: the UPS is not operating

QUICK GUIDE **Start the UPS** Section 4.1.2

1. **Ready switches** — Set the ready switches of the bypass module and of every power module to the ready position
2. **Switches** — Bypass, then mains, then external battery switch: the UPS starts on bypass
3. **Alarms** — Enter the user password and check on the home page that no fault alarm is shown
4. **Indicators** — Wait until the run indicators of all power modules flash green slowly
5. **ON + ON** (3 s) — Press the ON button pair, or tap the ON/OFF icon and confirm
6. **OUTPUT** — Switch on the output switch, check the output voltage, then the loads, largest first

QUICK GUIDE **Shut down** Section 4.1.3

1. **Loads off** — Switch off the load
2. **OFF + OFF** (3 s) — Press the OFF button pair, or tap the ON/OFF icon and confirm: the UPS goes to bypass
3. **Switches** — Battery, mains, bypass, then output switch off
4. **Indicators** — Wait until the touch screen and all indicators are off

QUICK GUIDE **Cold start from the battery** Section 4.1.2

1. **Battery switch** — Switch on only the external battery switch
2. **Cold start** (> 3 s) — Press and hold the battery cold-start button on the UPS

QUICK GUIDE **Mute the buzzer** Section 5.4

1



Tap the buzzer icon on the menu bar to mute or unmute

A new fault after muting turns the buzzer on again.

5.2 Home Page

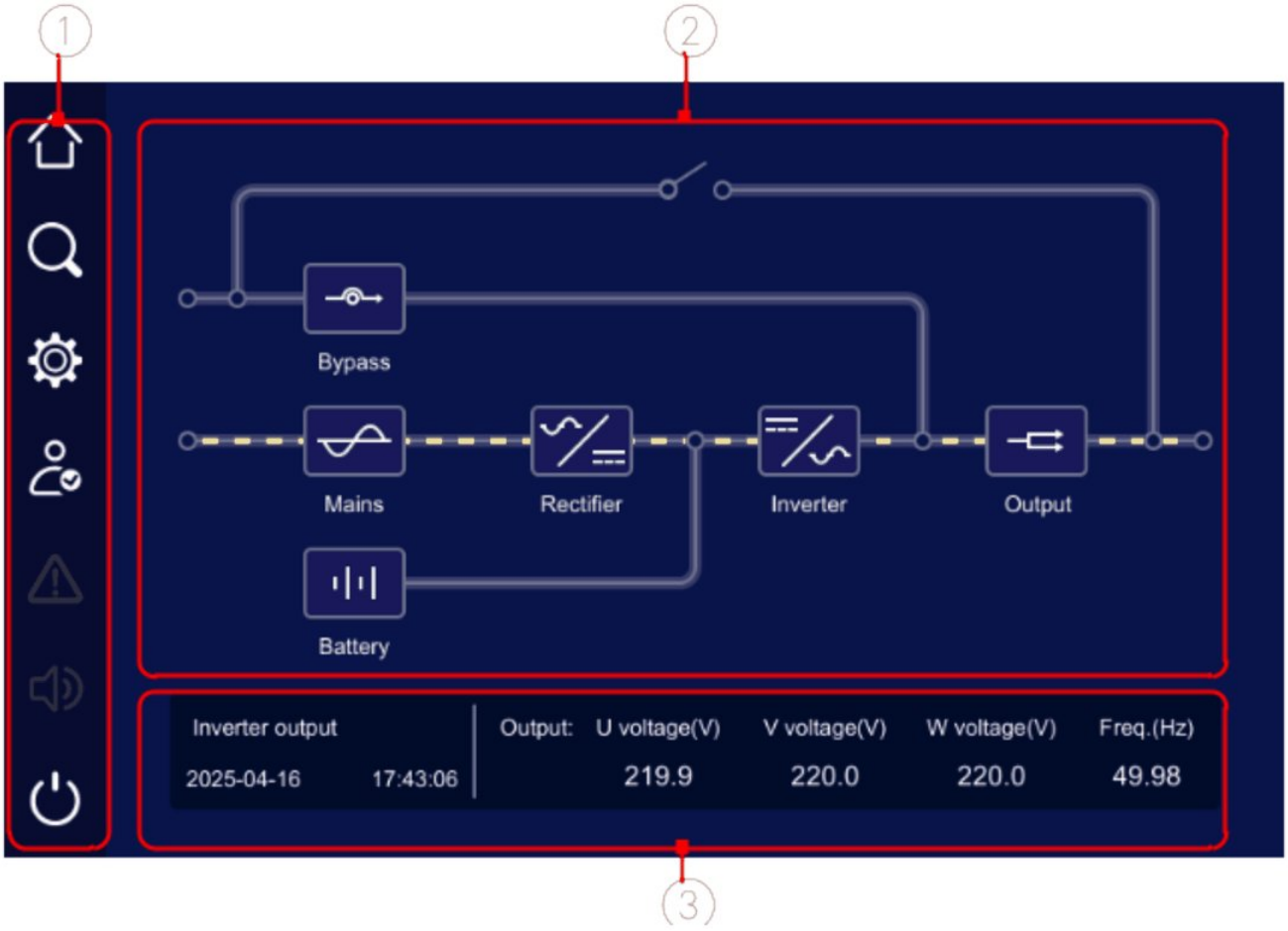

FIGURE 5-2 Home page

TABLE 5-1 Function area description

No.	Area	Description
	Menu bar	Include home page, info manage, setting manage and current fault, etc.
	Main area	Display UPS current running status and info.
	Status bar	Include UPS stat, date and time, output info, etc.

TABLE 5-2 Menu bar icon description

Icon	Meaning
	Home page Info manage
	Setting manage
	User login
	Current fault
	Buzzer switch
	Inverter ON/OFF

TABLE 5-3 Main page icon description

Icon	Meaning	Description
	Bypass info	 When the bypass input is abnormal, this icon flashes and displays as
	Mains info	 When the mains input is abnormal, this icon flashes and displays as
	Rectifier info	Tap it to view the rectifier information of each module.
	Inverter info	Tap it to view the inverter information of each module.
	Battery info	 When the battery is abnormal, this icon flashes and displays as
	Output info	 When output is abnormal, this icon flashes and displays as

TABLE 5-4 Status bar icon description

Icon	Description
	Display the current UPS status.
	Display the date and time.
	Display output info.

5.3 System Working Status

The system working status includes fault protection, OFF, bypass output, inverter output, grid- tied self-load mode, ECO output, WECO output, frequency converter output, and maintenance bypass output.

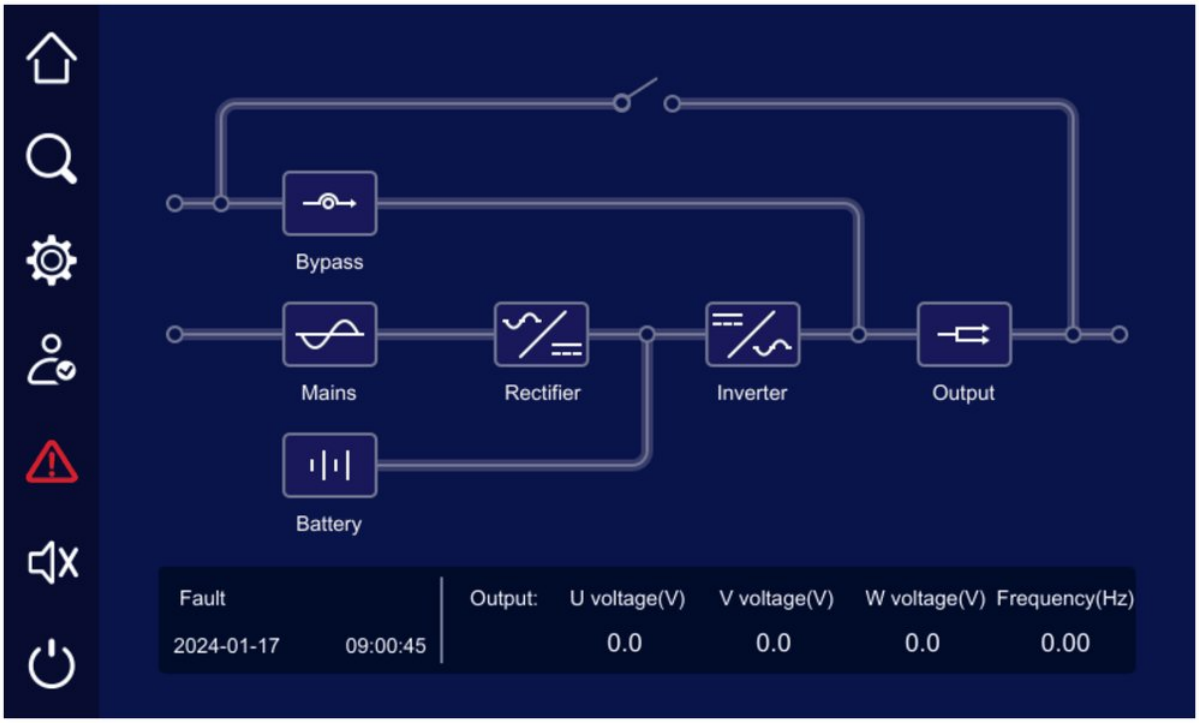

FIGURE 5-3 Fault protection, no output

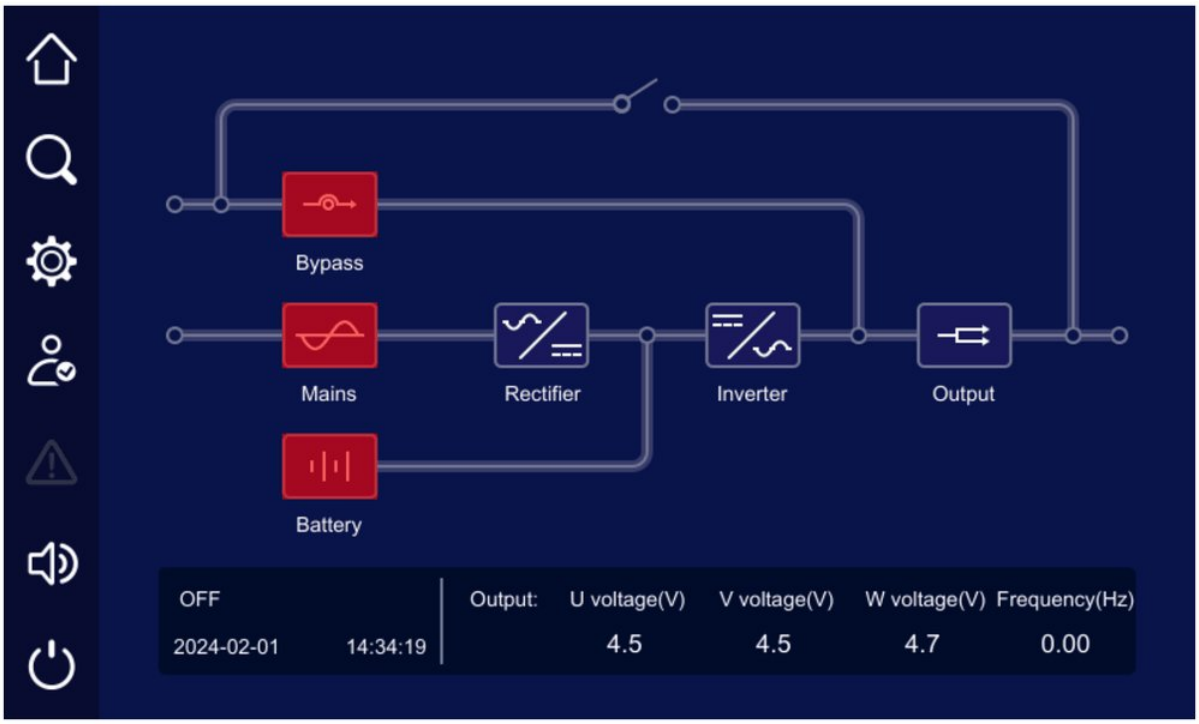

FIGURE 5-4 OFF

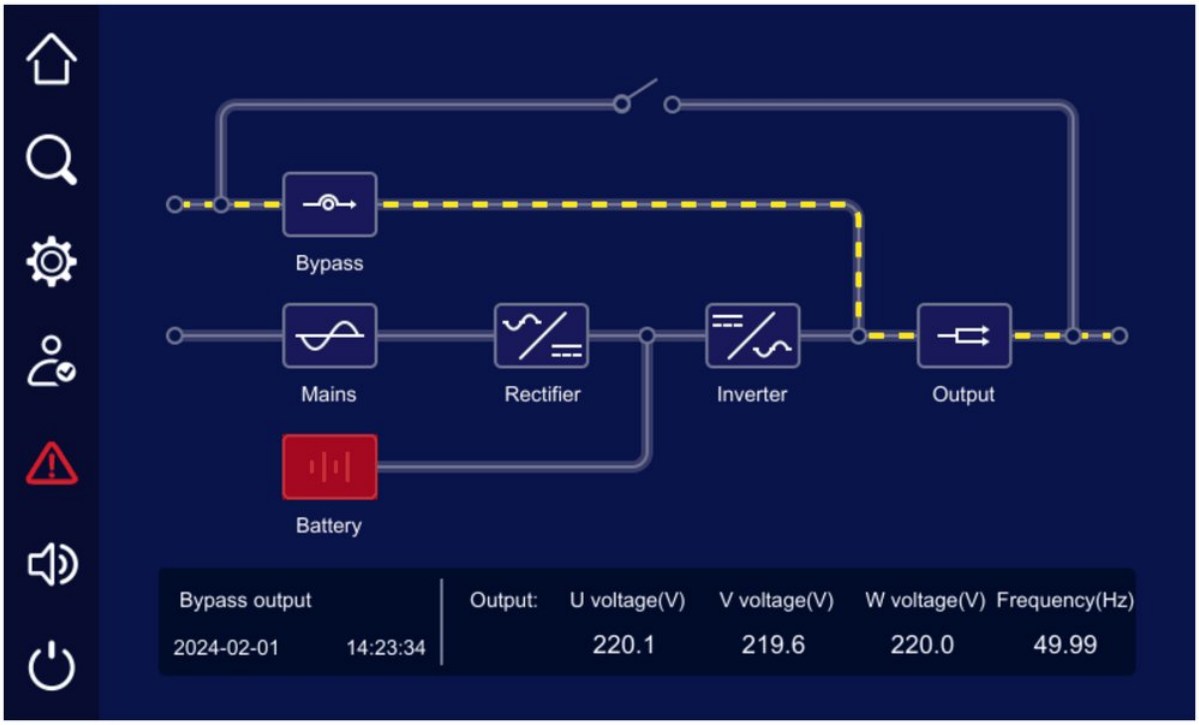

FIGURE 5-5 Bypass output

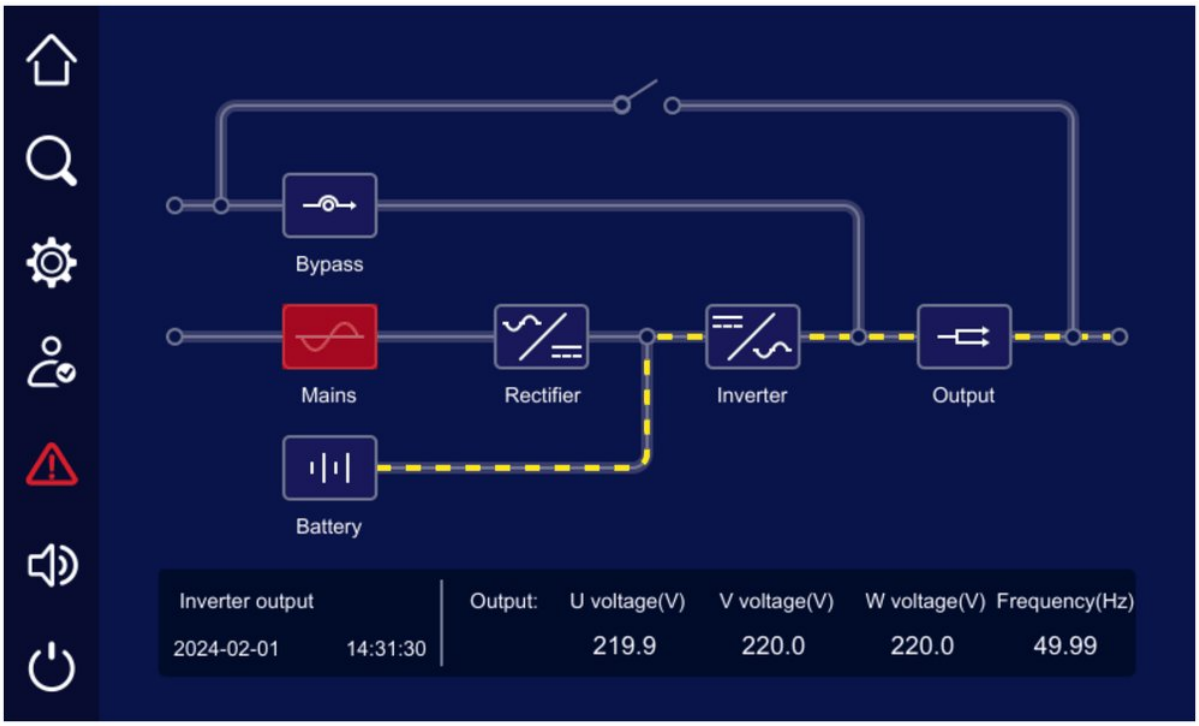

FIGURE 5-6 Battery inverter output

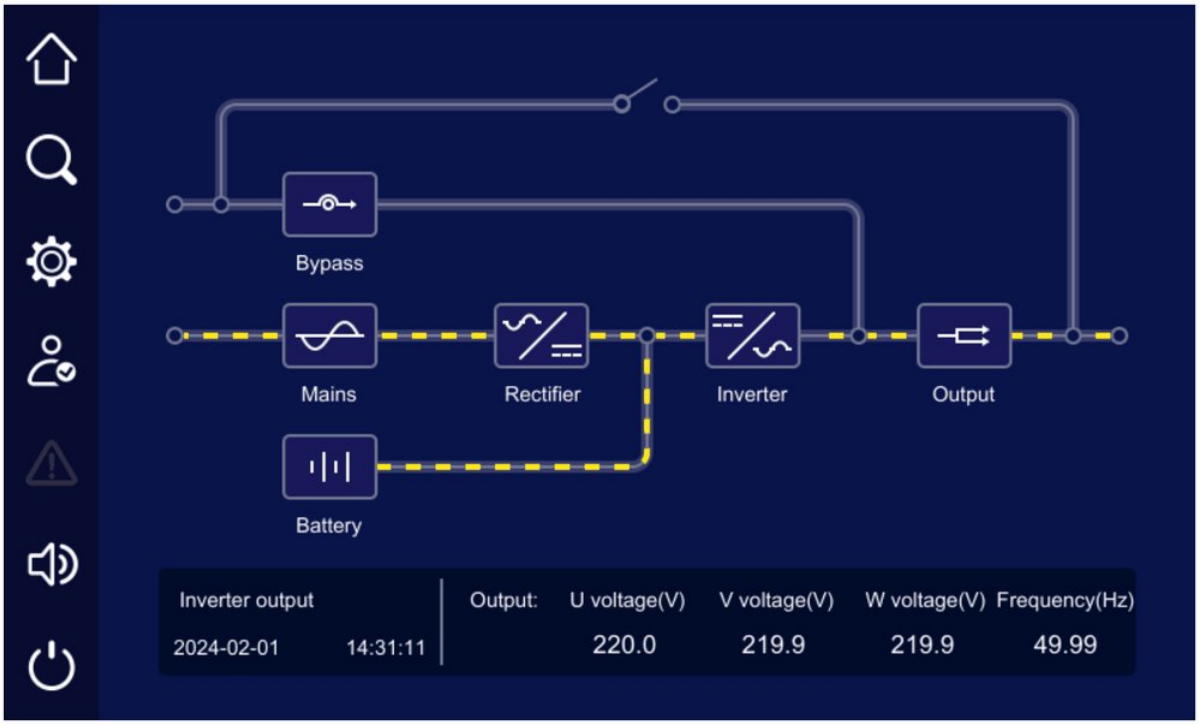

FIGURE 5-7 Mains inverter output

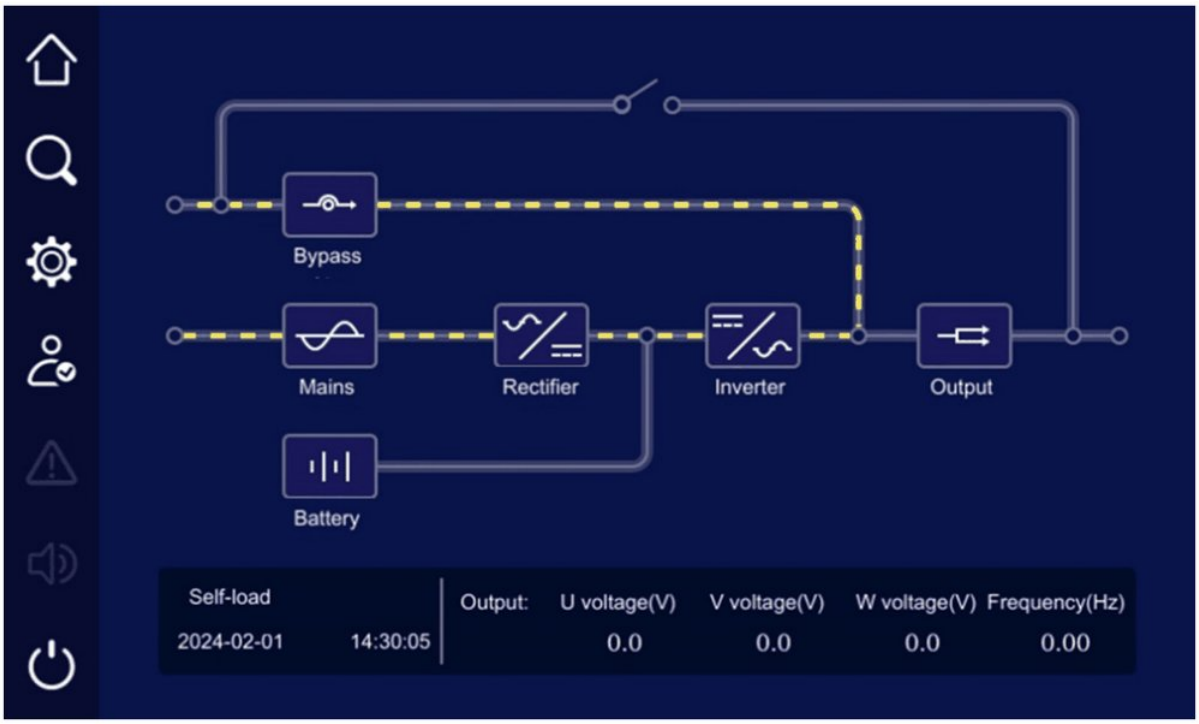

FIGURE 5-8 Grid-tied self-load mode

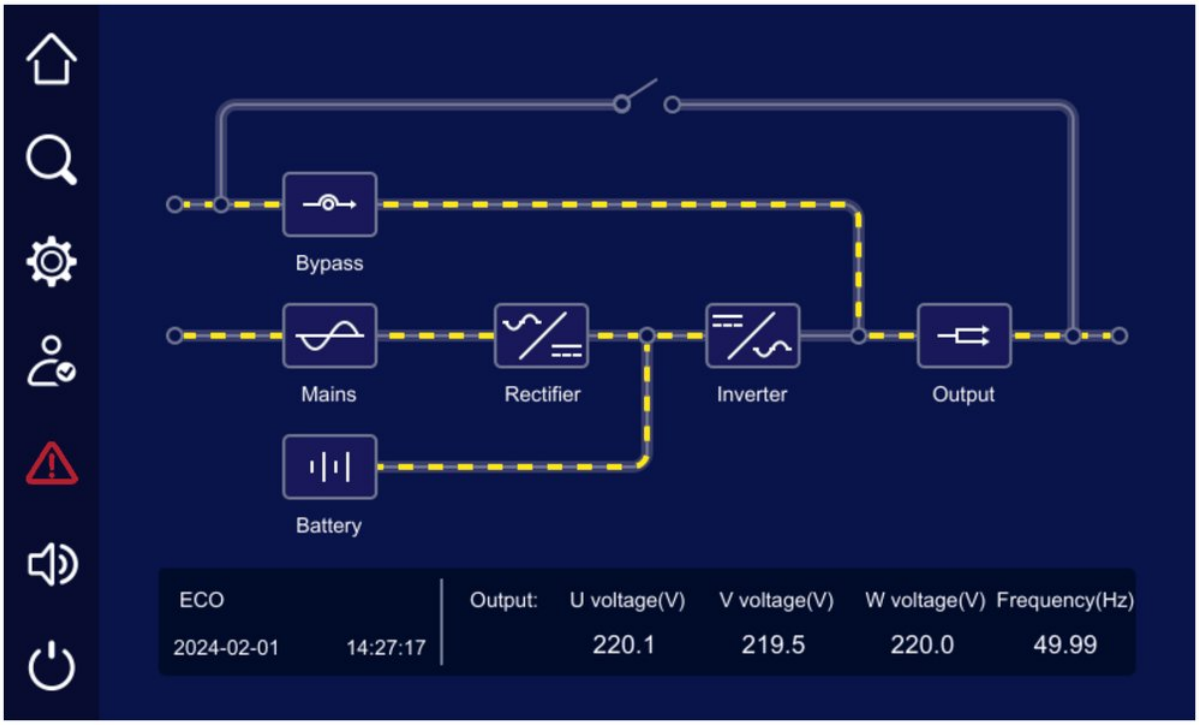

FIGURE 5-9 ECO output

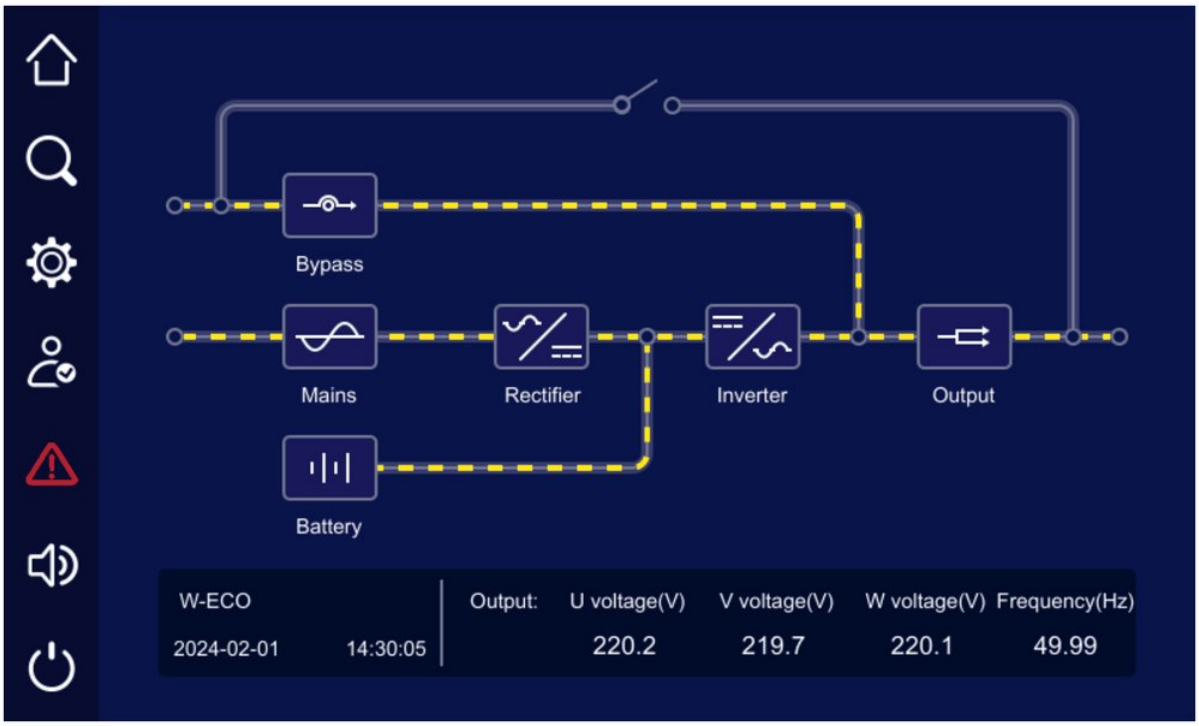

FIGURE 5-10 WECO output

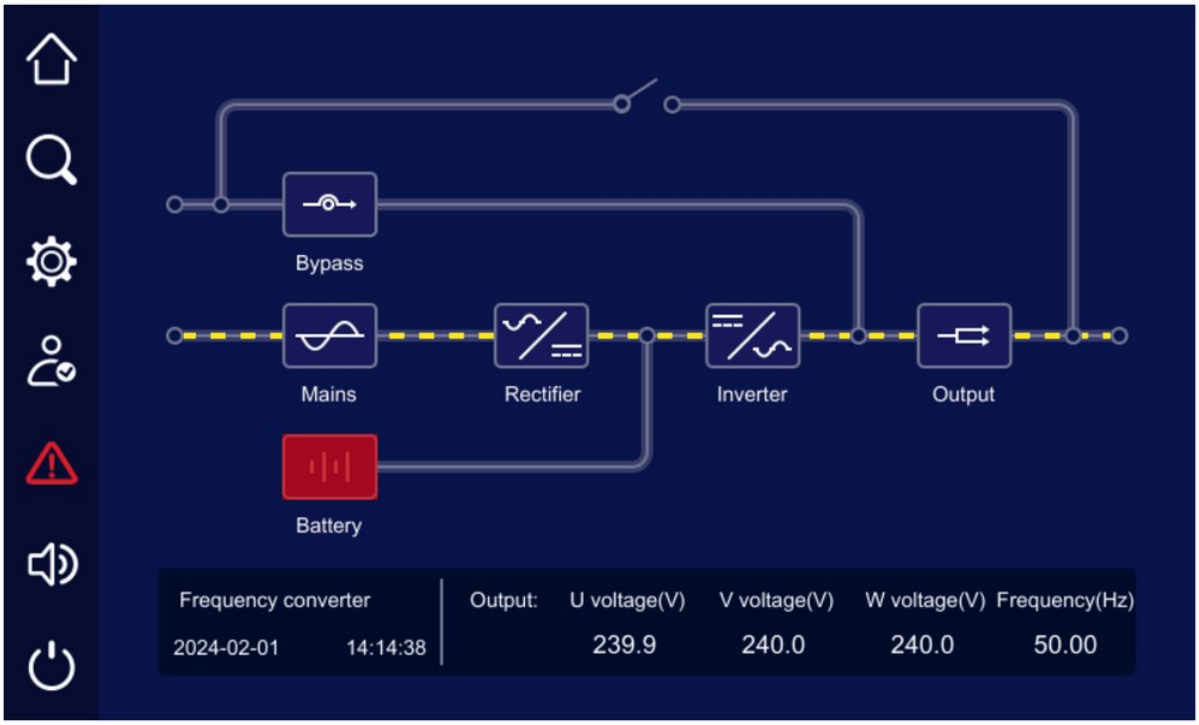

FIGURE 5-11 Frequency converter output

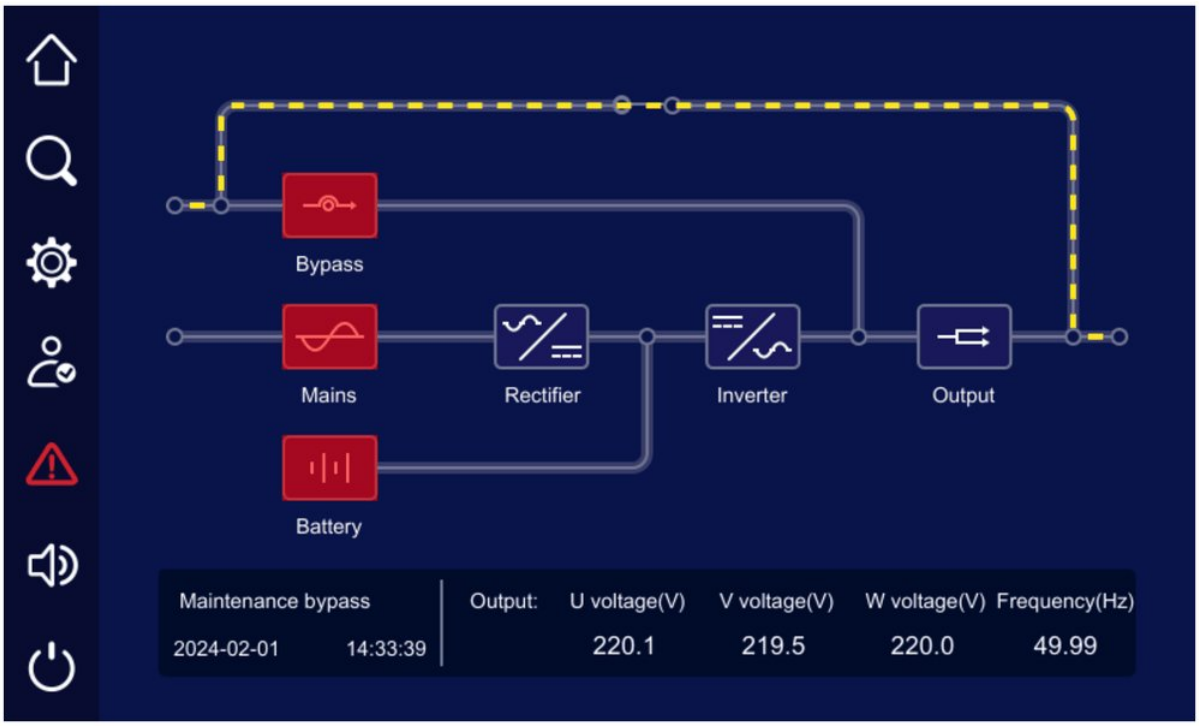

FIGURE 5-12 Maintenance bypass output

When a module or system encounters an abnormal condition, the menu bar displays  icon, and tapping the  icon displays the current fault information.

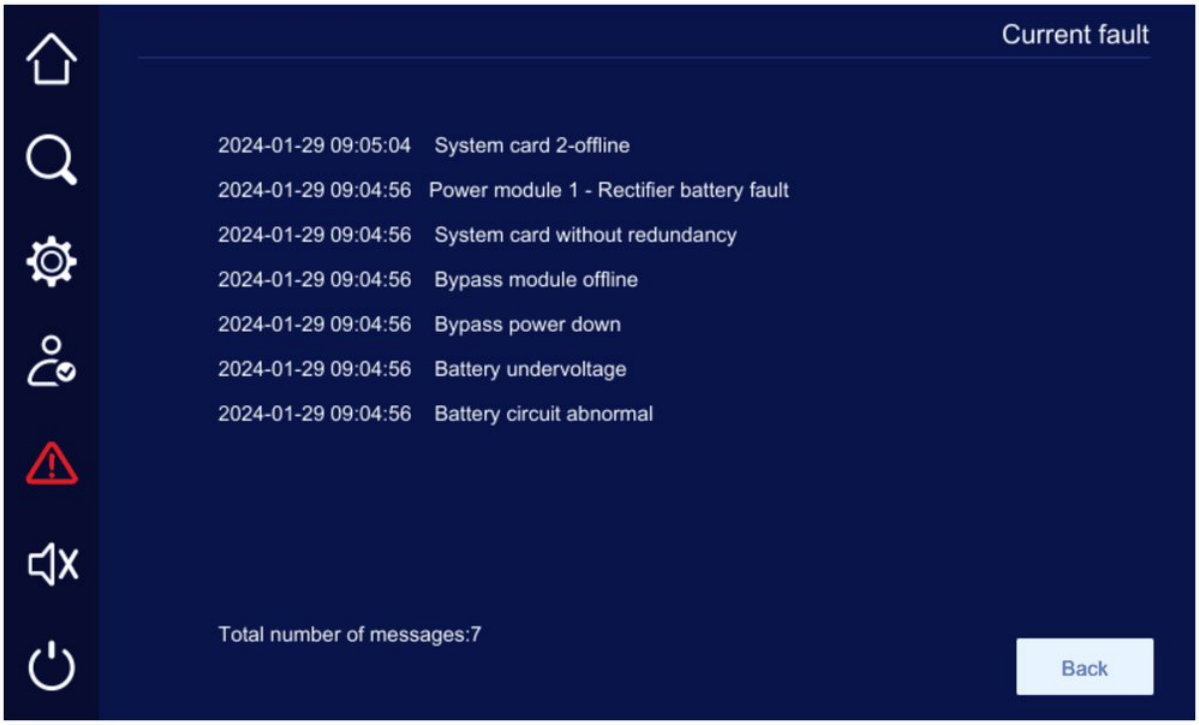

FIGURE 5-13 Current fault info

5.4 Buzzer Control

When an abnormal condition occurs in the module or system, the system generates a buzzer alarm. Tap the icon in the main menu bar to turn off or turn on the buzzer. When the buzzer is turned off, the buzzer automatically starts if a new fault occurs.

> **NOTE**
> When the buzzer keeps beeping, it cannot be turned off by tapping the icon in the main menu bar unless the fault is removed. For details about the fault causes, please refer to “2.7 Alarm Protection Function”.

5.5 Home Page

5.5.1 Mains Info

On the home page, tap the  icon to enter the mains info page. The mains info page displays the mains phase voltage, mains line voltage, mains current and mains frequency.

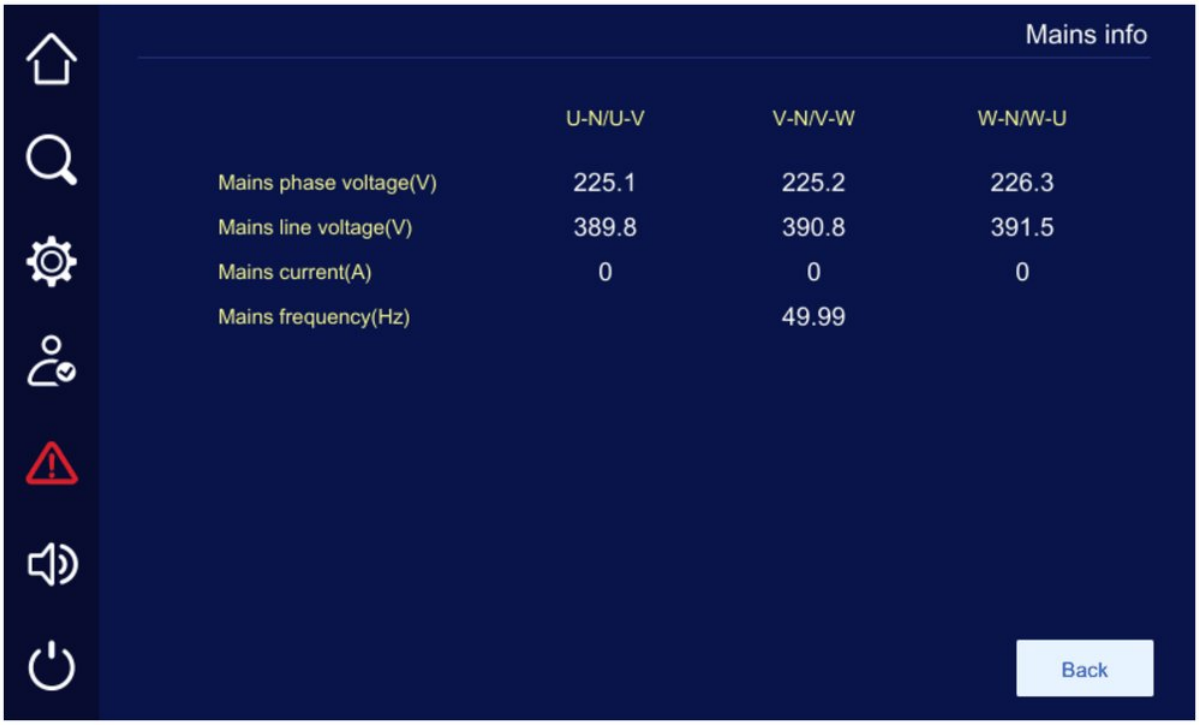

FIGURE 5-14 Mains info page

5.5.2 Bypass Info

On the home page, tap the  icon to enter the bypass info page. The bypass info page displays the bypass phase voltage, bypass line voltage, bypass current and bypass frequency.

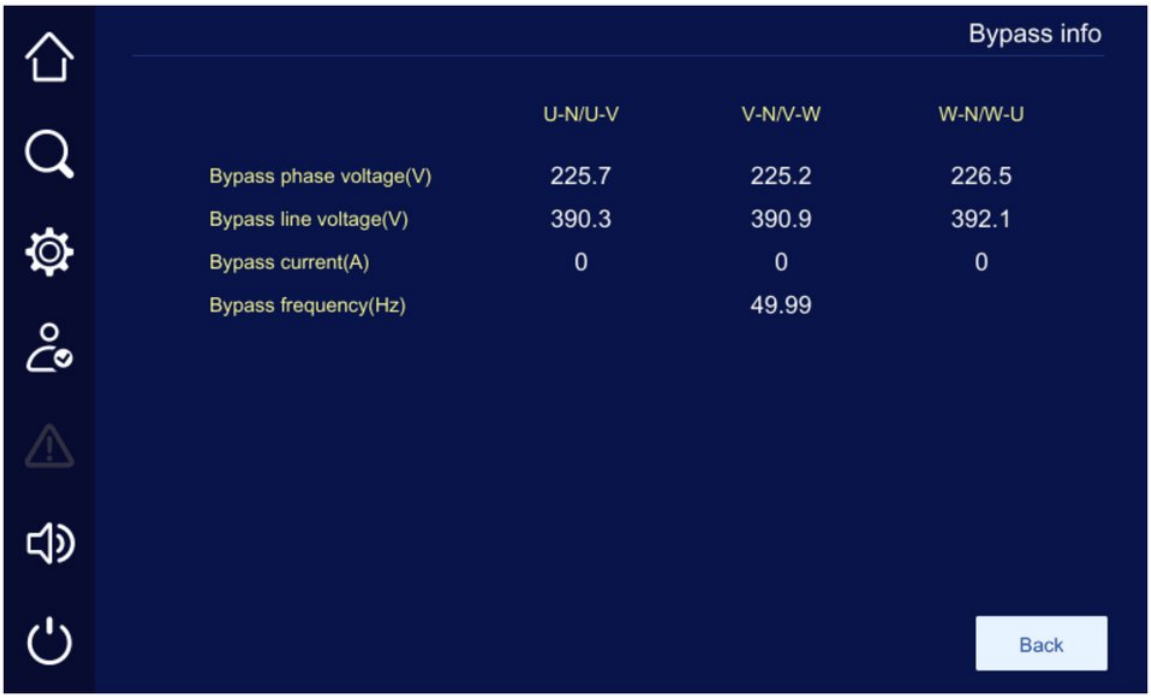

FIGURE 5-15 Bypass info page

5.5.3 Battery Info

On the home page, tap the icon to enter the battery info page. The battery info page displays the battery voltage, battery discharge current, battery charge current, battery remaining capacity, battery remaining time, battery temperature and battery state.

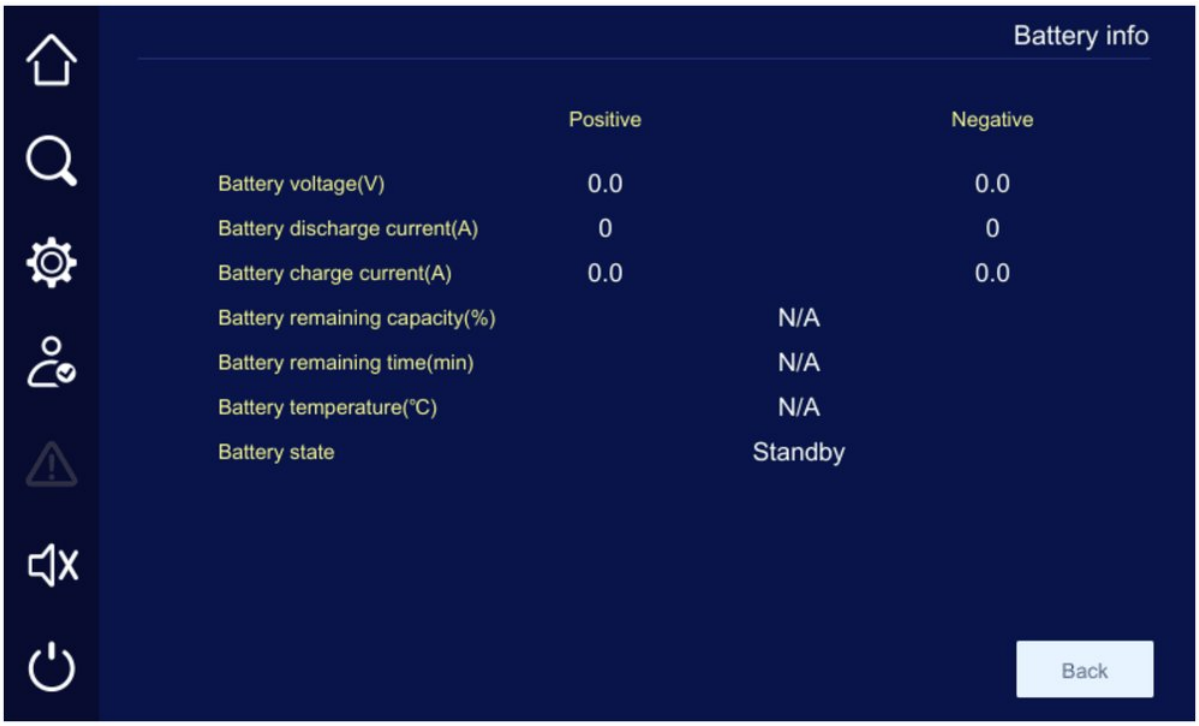

FIGURE 5-16 Battery info page

5.5.4 Rectifier Info

On the home page, tap the icon to enter the rectifier info page. In the rectifier info page, tap the Module-1 icon to view the info of each power module."



FIGURE 5-17 Rectifier info page

5.5.5 Inverter Info

On the home page, tap the icon to enter the inverter info page. In the inverter info page, tap the Module-1 icon to view the info of each power module.



FIGURE 5-18 Inverter info page

5.5.6 Output Info

On the home page, tap the icon to enter the output info page. The output info page displays the output phase voltage, output line voltage, output current, output active power, output reactive power, output apparent power, output load rate, output power factor and output frequency.

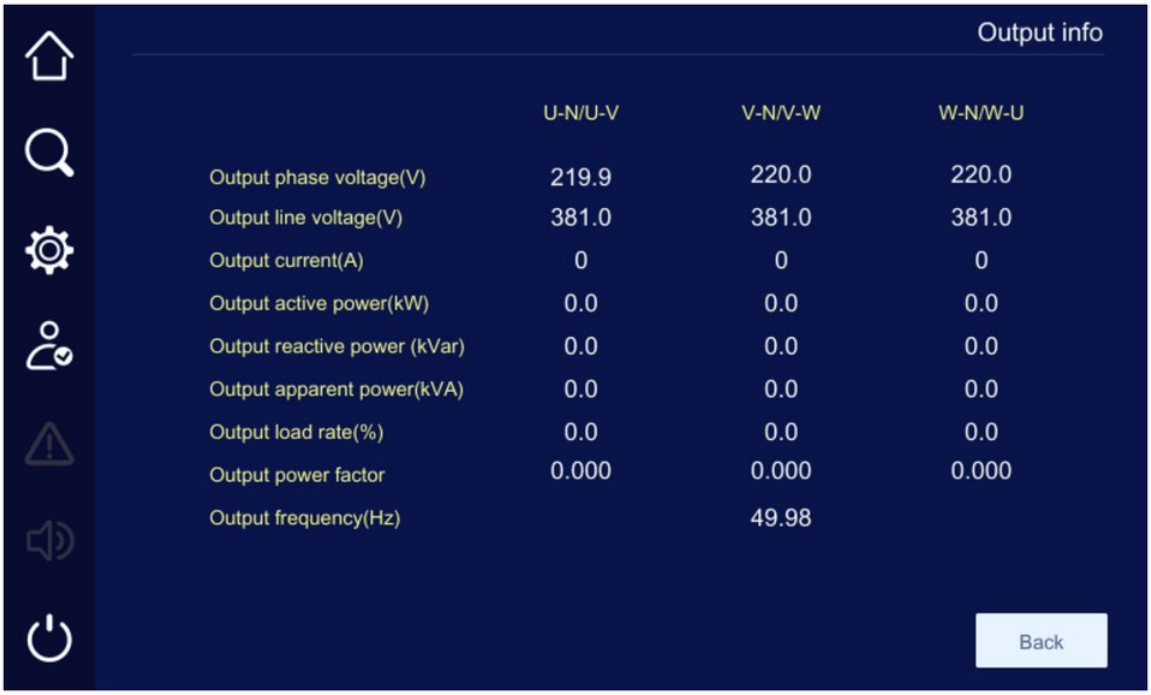

FIGURE 5-19 Output info page

5.6 Info Manage

On the menu bar, tap the icon to enter the info manage page. The info manage page displays the running info, history record, user log, smart record, device info, smart wave capture, running record and battery discharge record.

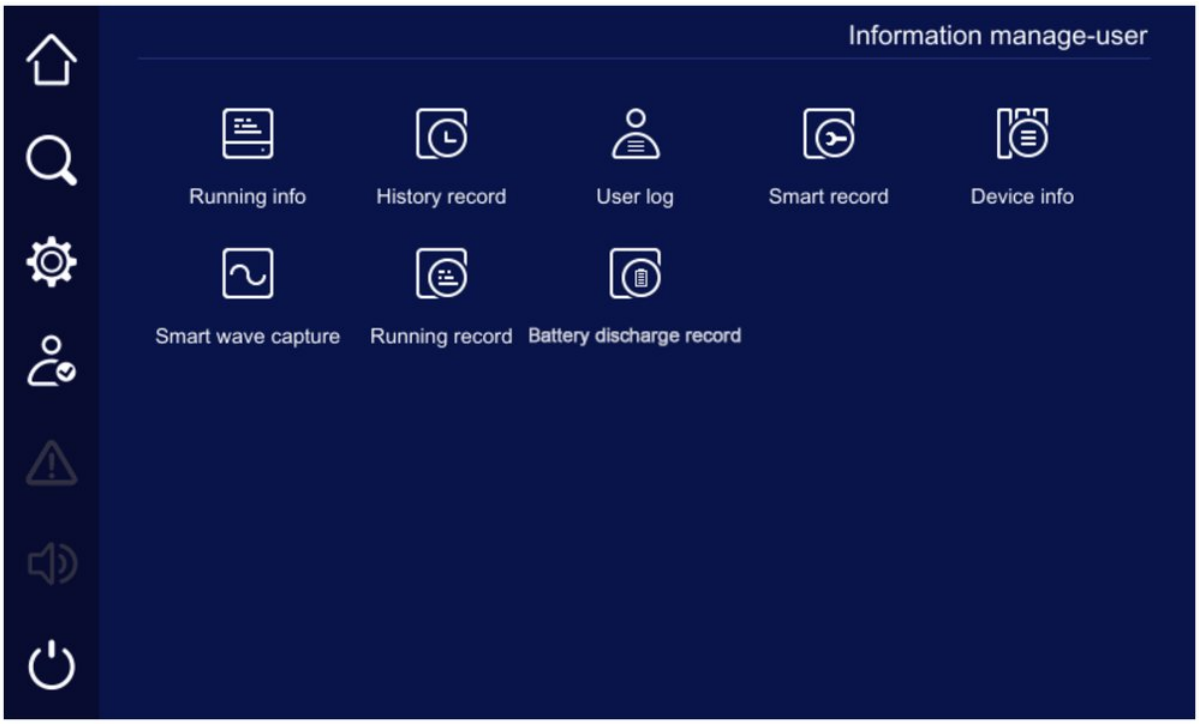

FIGURE 5-20 Info manage page

CAUTION

Up to 10000 records can be recorded. When the number of alarm records exceeds 10,000, the earliest record will be overwritten by the new record. All records are arranged in reverse chronological order.

5.6.1 Running Info

On the info manage page, tap the icon to enter the running info page. The running info page displays the system card sampling info.

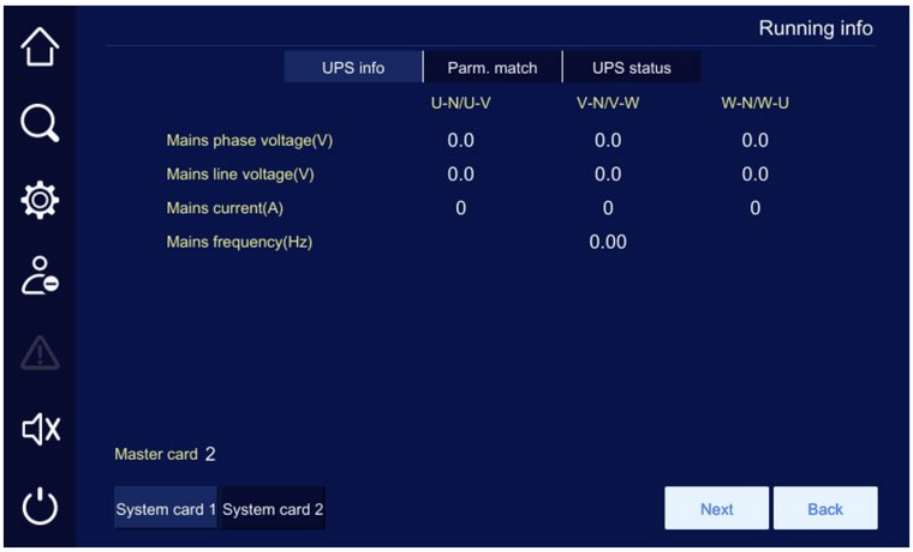

FIGURE 5-21 Running info page

5.6.2 History Record

On the info manage page, tap the 

icon to enter the history record page. The history record page displays the history fault and alarm info of the system and modules.

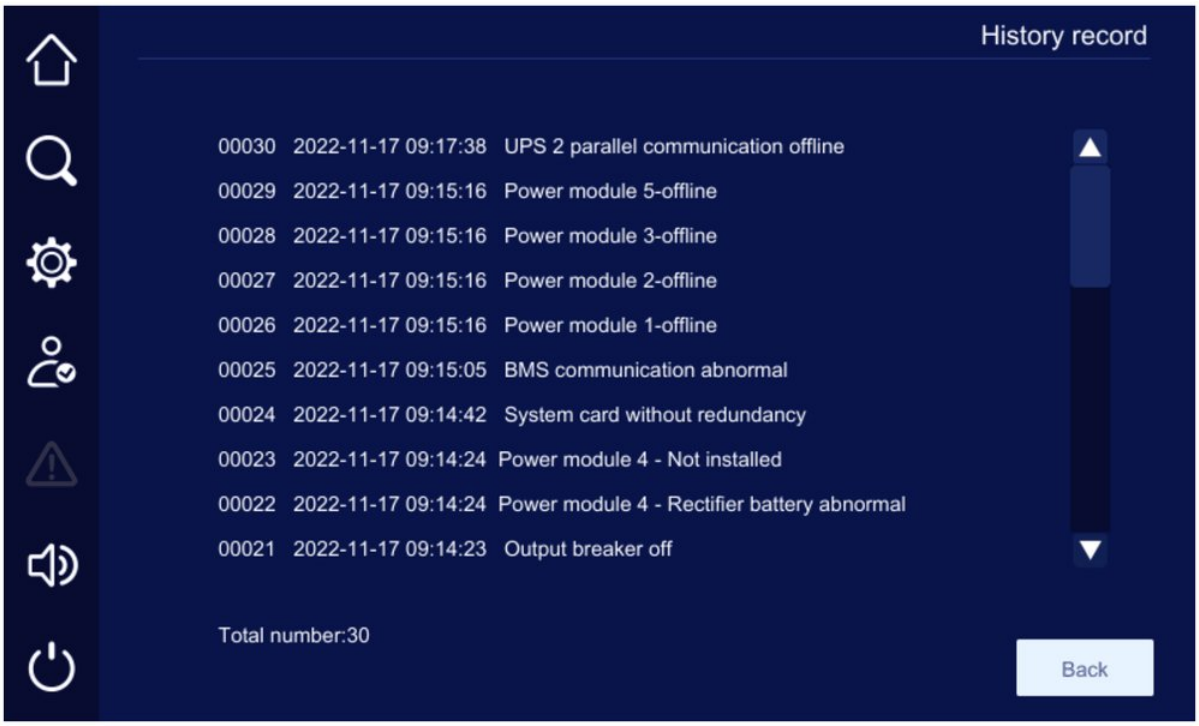

FIGURE 5-22 History record page

5.6.3 User Log

On the info manage page, tap the 

icon to enter the user log page. The user log page displays the user parameter change records.

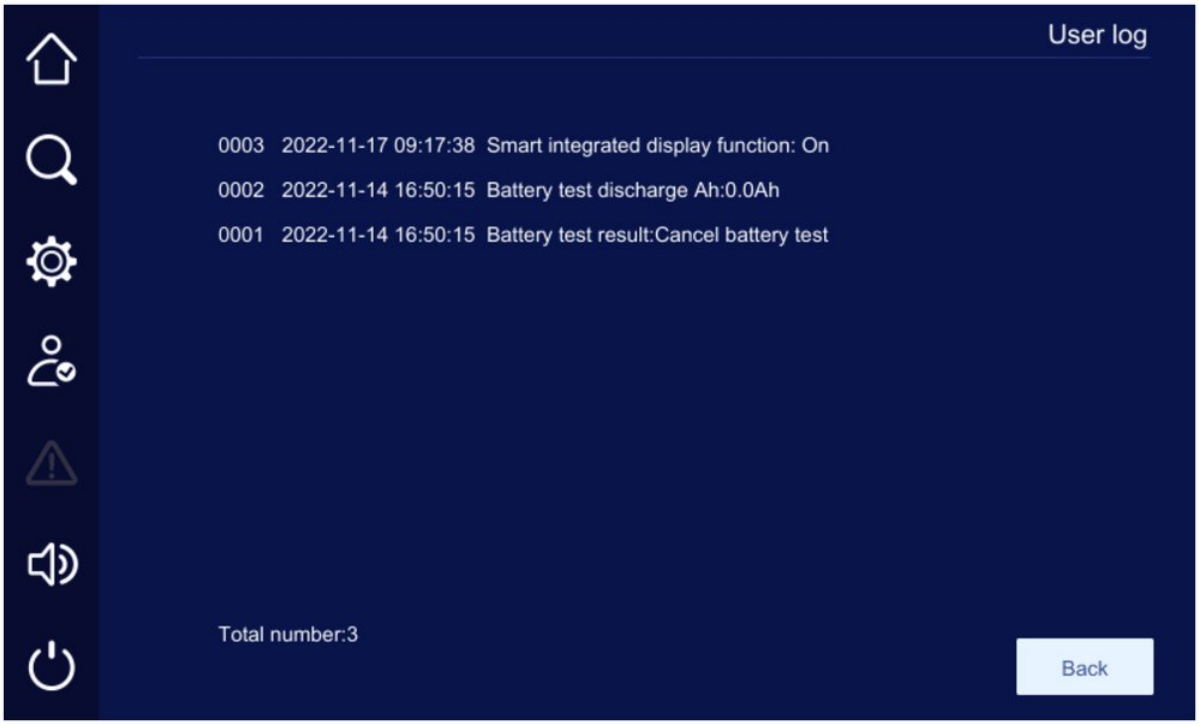

FIGURE 5-23 User log page

5.6.4 Smart Record

On the info manage page, tap the 

icon to enter the smart record page. The smart record page displays the maintenance personnel repair and replacement records.

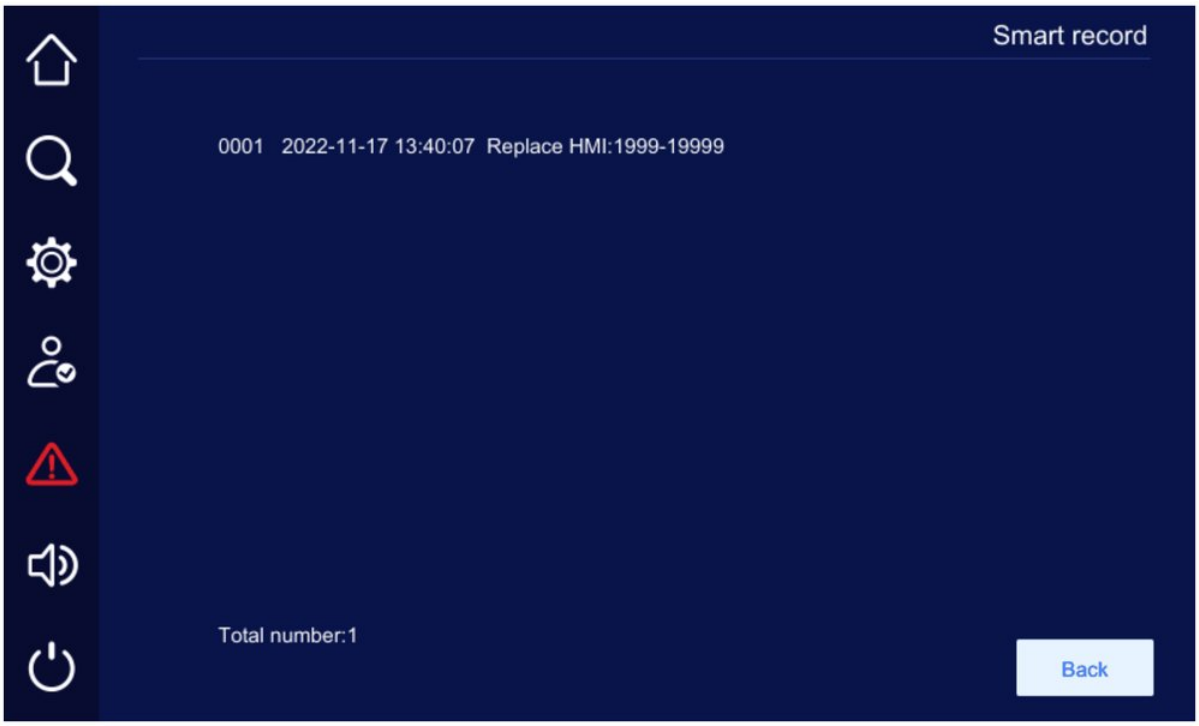

FIGURE 5-24 Smart record page

5.6.5 Device Info

On the info manage page, tap the 

icon to enter the device info page. The device info page displays the product name, model, S/N and protocol version, etc.

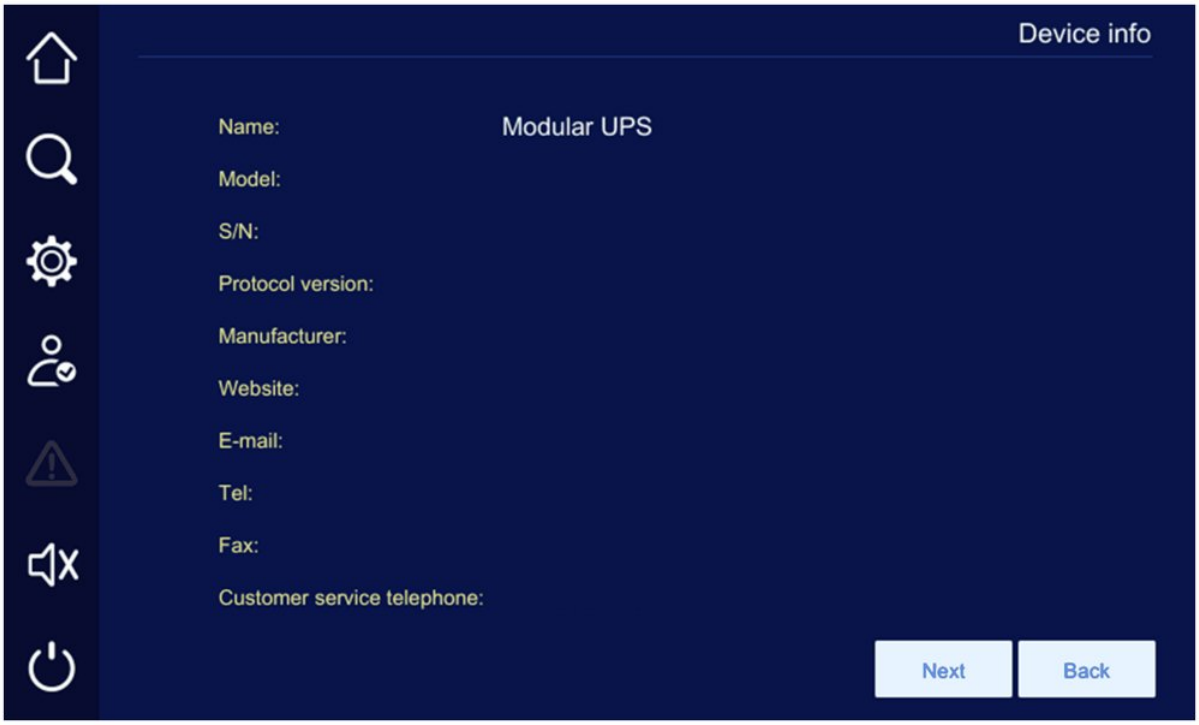

FIGURE 5-25 Device info page 1

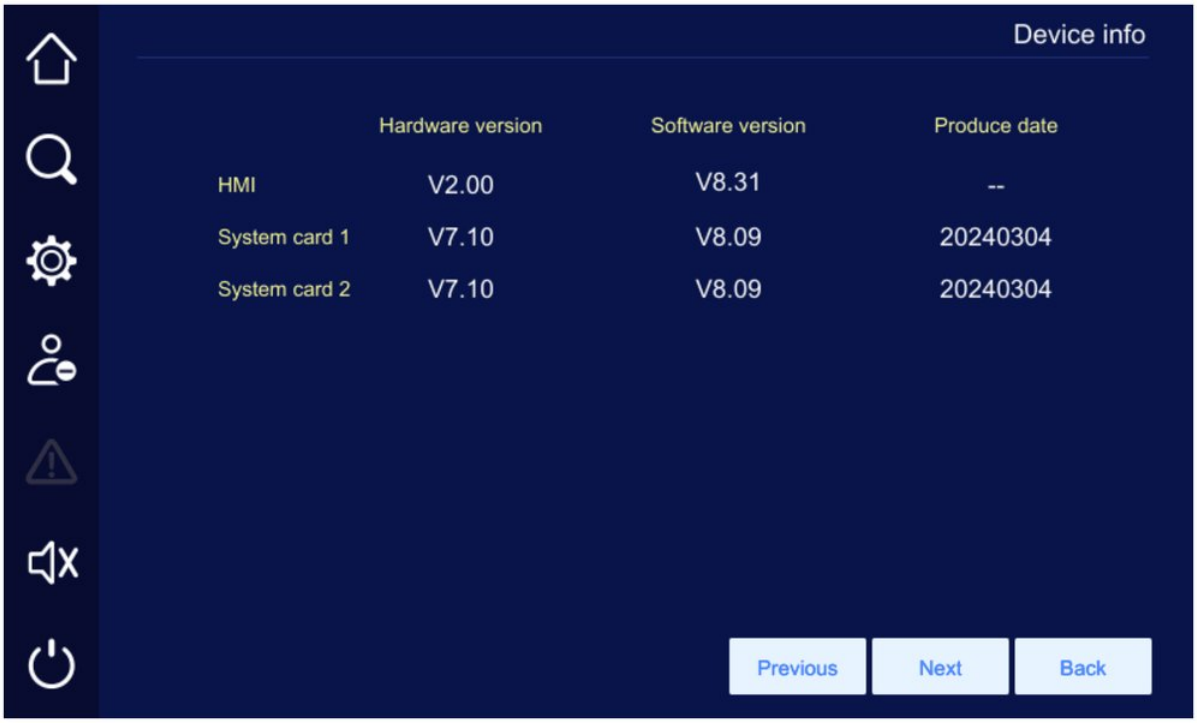

FIGURE 5-26 Device info page 2

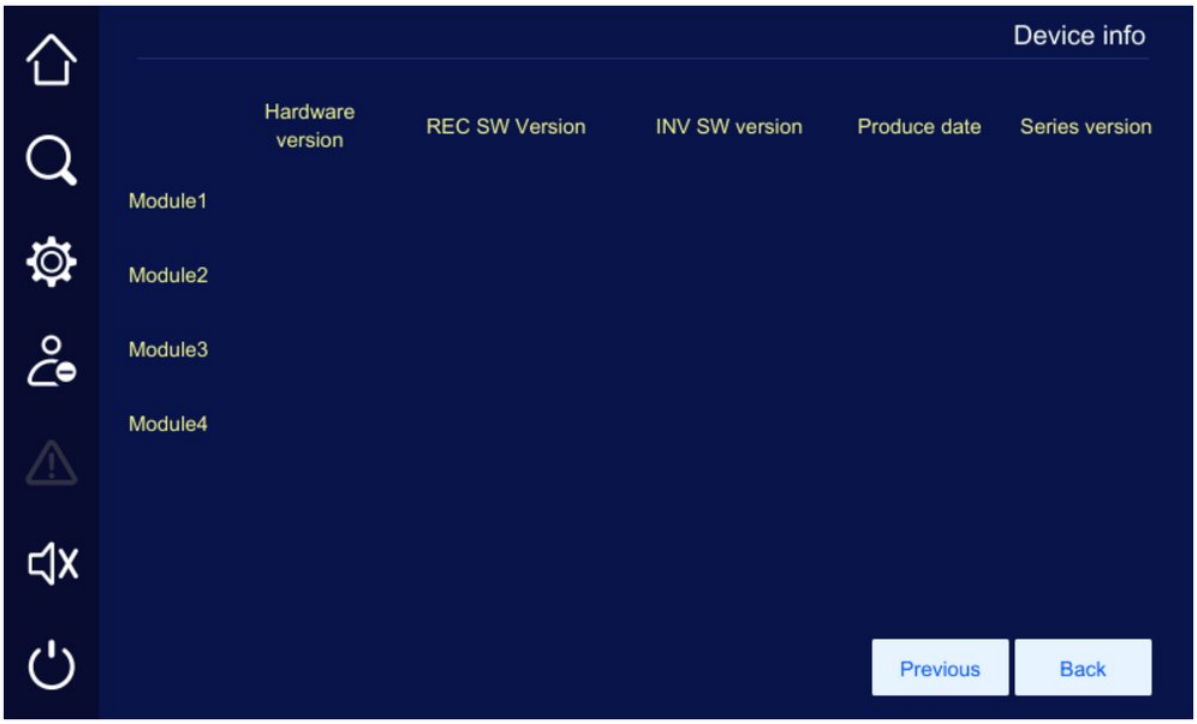

FIGURE 5-27 Device info page 3

5.6.6 Smart Wave Capture

On the info manage page, tap the  icon to enter the smart wave capture page. The smart wave capture page displays the voltage/current waveform of the fault time.

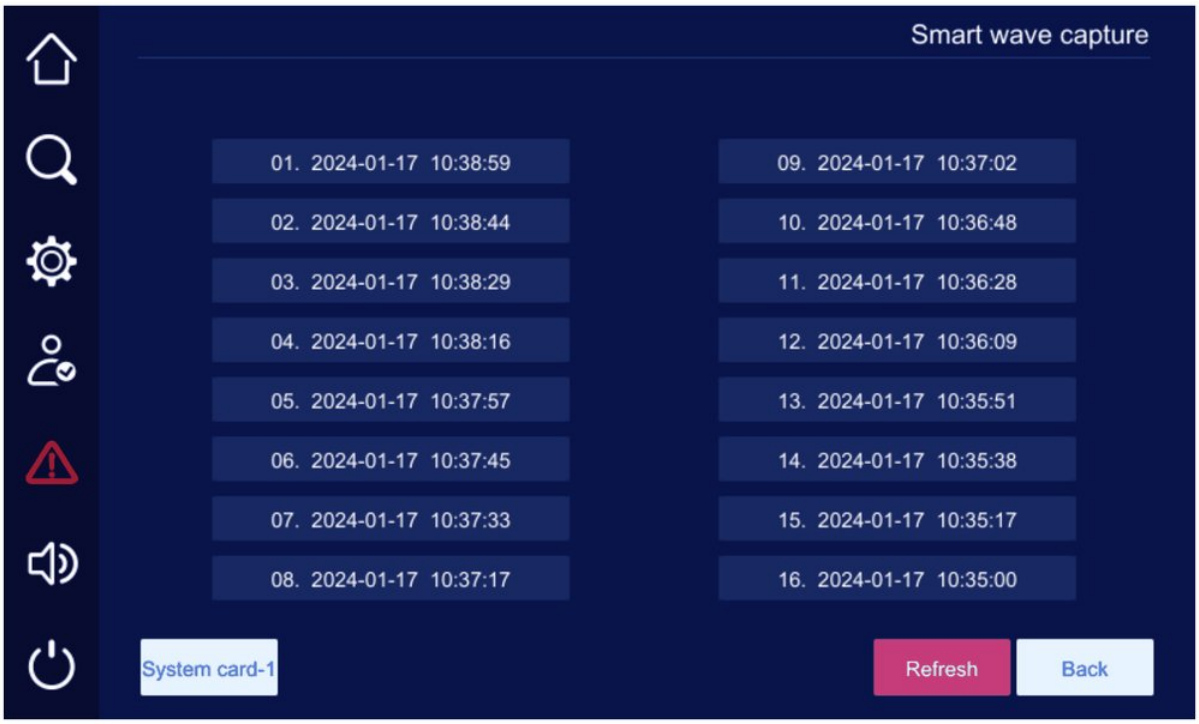

FIGURE 5-28 Smart wave capture page

5.6.7 Running Record

On the info manage page, tap the " 

" icon to enter the running record page. The page displays the input voltage and current info.

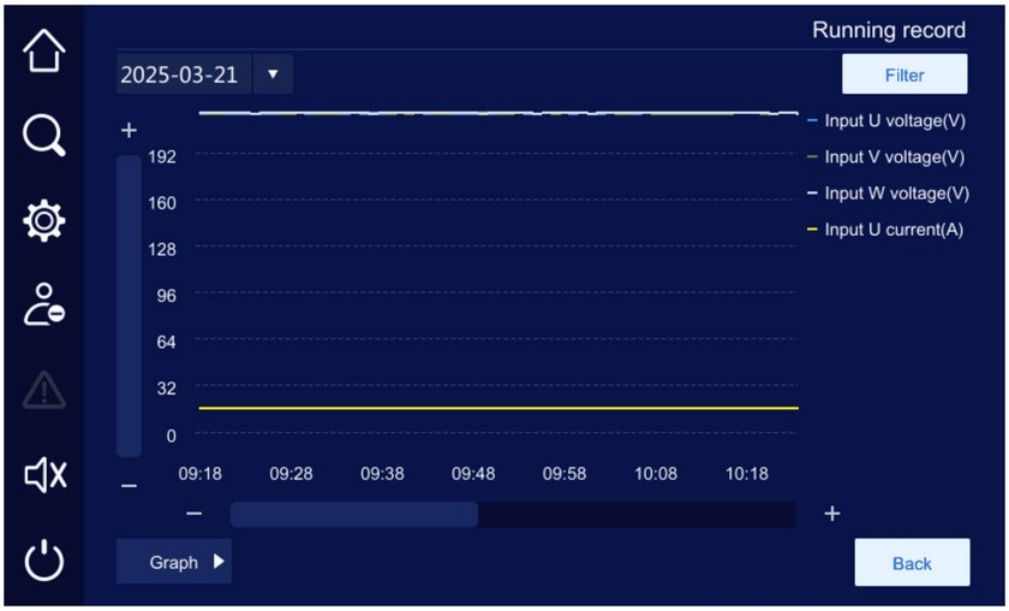

FIGURE 5-29 Running record page

5.6.8 Battery Discharge Record

On the info manage page, tap the "Battery discharge record" icon to enter the battery discharge record page. The page displays the battery discharge info.

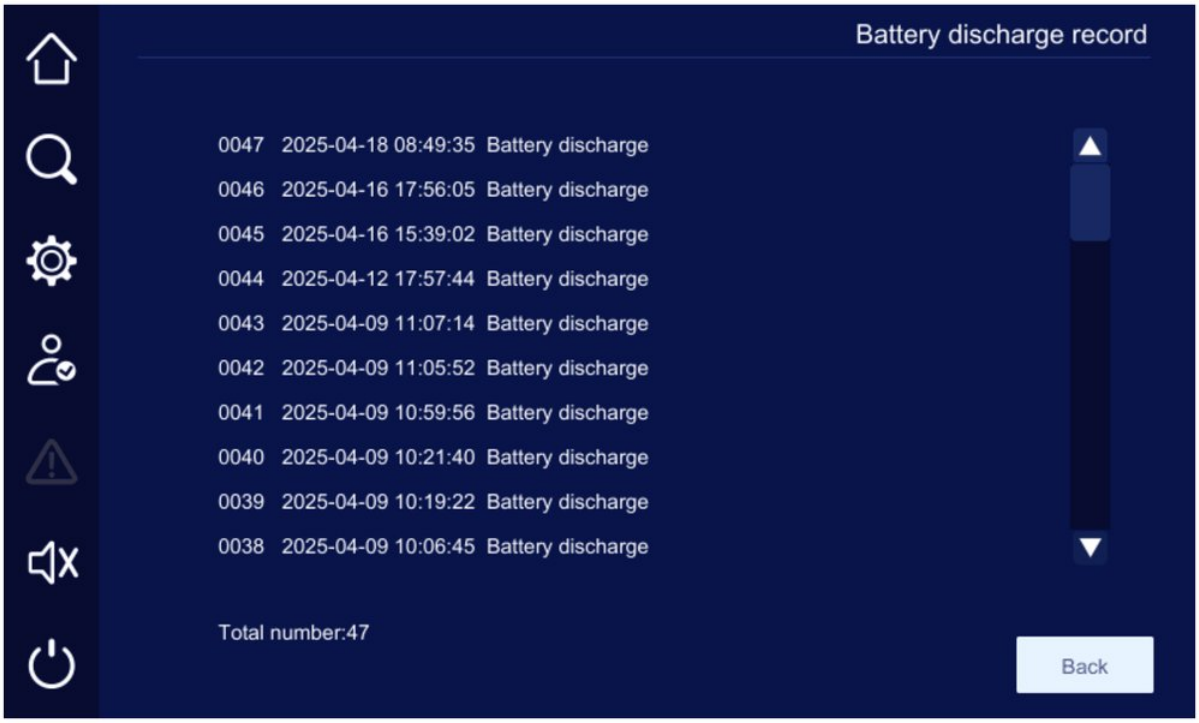

FIGURE 5-30 Battery discharge record page

5.7 Setting Manage

On the menu bar, tap the icon to enter the setting manage page. The setting manage page displays the cabinet setting, battery setting, battery test, output setting, smart mode, dry contact, screen setting, password setting, communication setting, record manage and energy storage UPS.

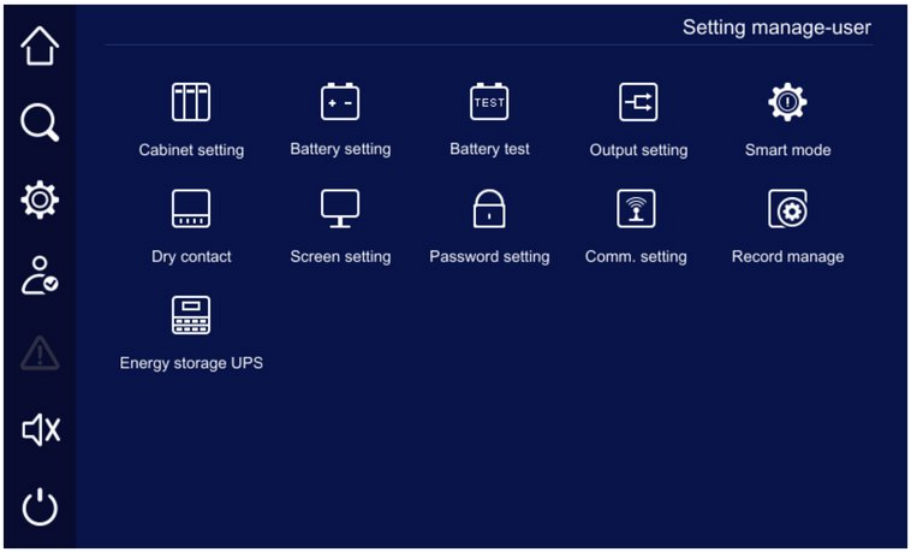

FIGURE 5-31 Setting manage page

> **NOTE**
> When the setting item is grey, it cannot be set.

5.7.1 Cabinet Setting

On the setting manage page, tap the 

icon to enter the cabinet setting page.

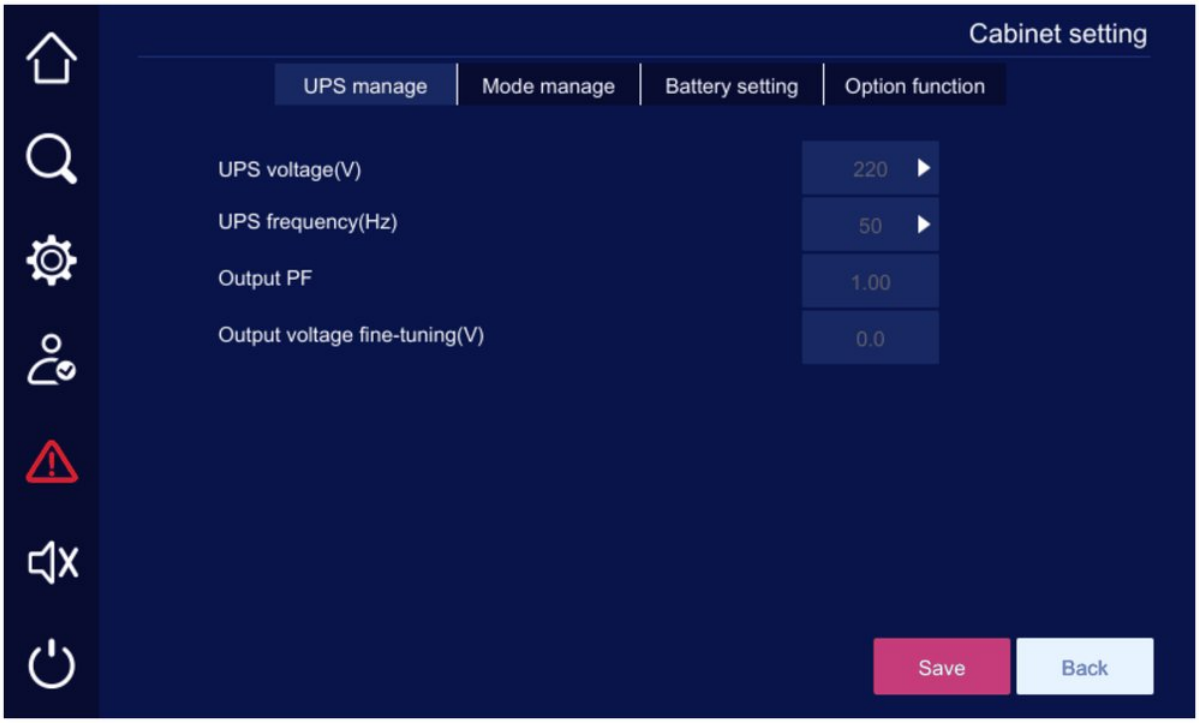

FIGURE 5-32 Cabinet setting page

5.7.2 Battery Setting

On the setting manage page, tap the 

icon to enter the battery setting page.

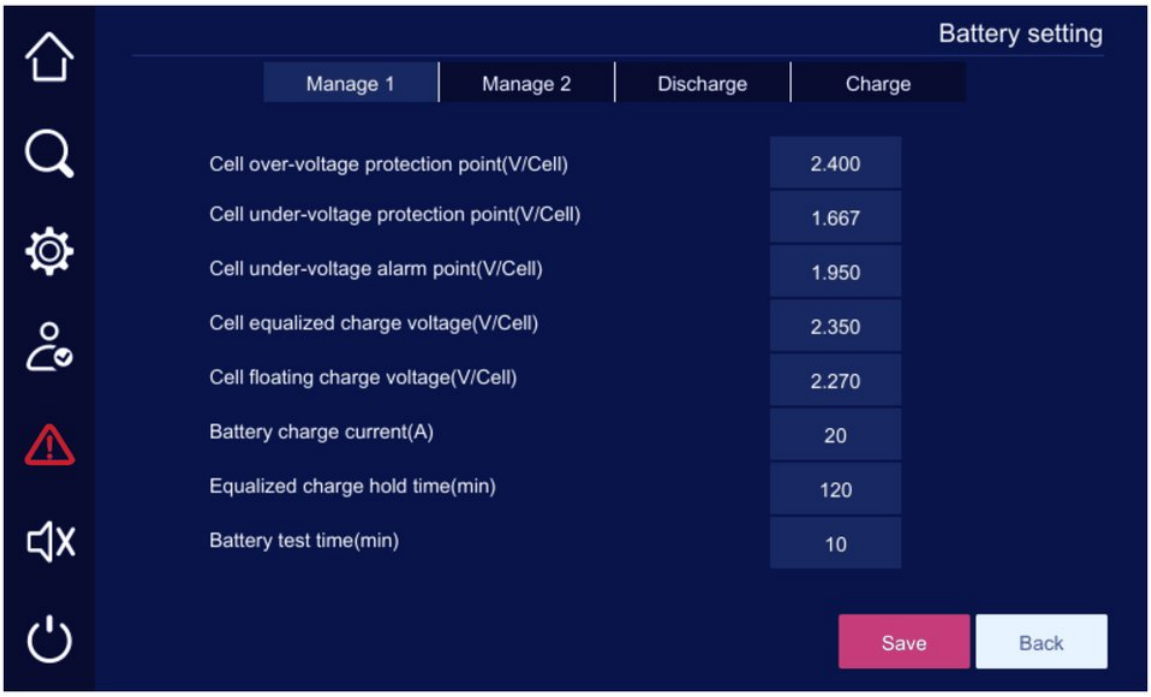

FIGURE 5-33 Battery setting page

TABLE 5-5 Battery manage 1 setting description

No.	Item	Description	Parameter setting
1	Cell overvoltage protection point	The max. voltage that the cell can withstand, exceeding the set value will trigger the battery protection function.	It can be set from 2.366V/cell to 2.450V/cell, default is 2.400V/cell.
2	Cell undervoltage protection point	The min. voltage that the cell can withstand, lower than the set value will trigger the battery protection function.	It can be set from 1.633V/cell to 1.833V/cell, default is 1.667V/cell
3	Cell undervoltage alarm point	Cell enters the undervoltage status, an alarm is triggered to inform the user that the battery is going to run out. If the battery continues to discharge, the battery protection may be taken.	It can be set from 1.880V/cell to 2.000V/cell, default is 1.950V/cell
4	Cell equalized charge voltage	Cell charge voltage in the equalized charge status	It can be set from 2.300V/cell to 2.400V/cell.
5	Cell floating charge voltage	Cell charge voltage in the floating charge status	It can be set from 2.167 V/cell to 2.300V/cell, default is 2.270V/cell
6	Battery charge current	The max. battery charging current	It can be set from 5A to 750A. Default is 20A, but does not exceed the charging capacity.
7	Equalized charge hold time	The max. hold time in equalized charge status	It can be set from 1min to 720min. Default is 30min.
8	Battery test time	Battery standard test time	It can be set from 1min to 240min. Default is 10min.

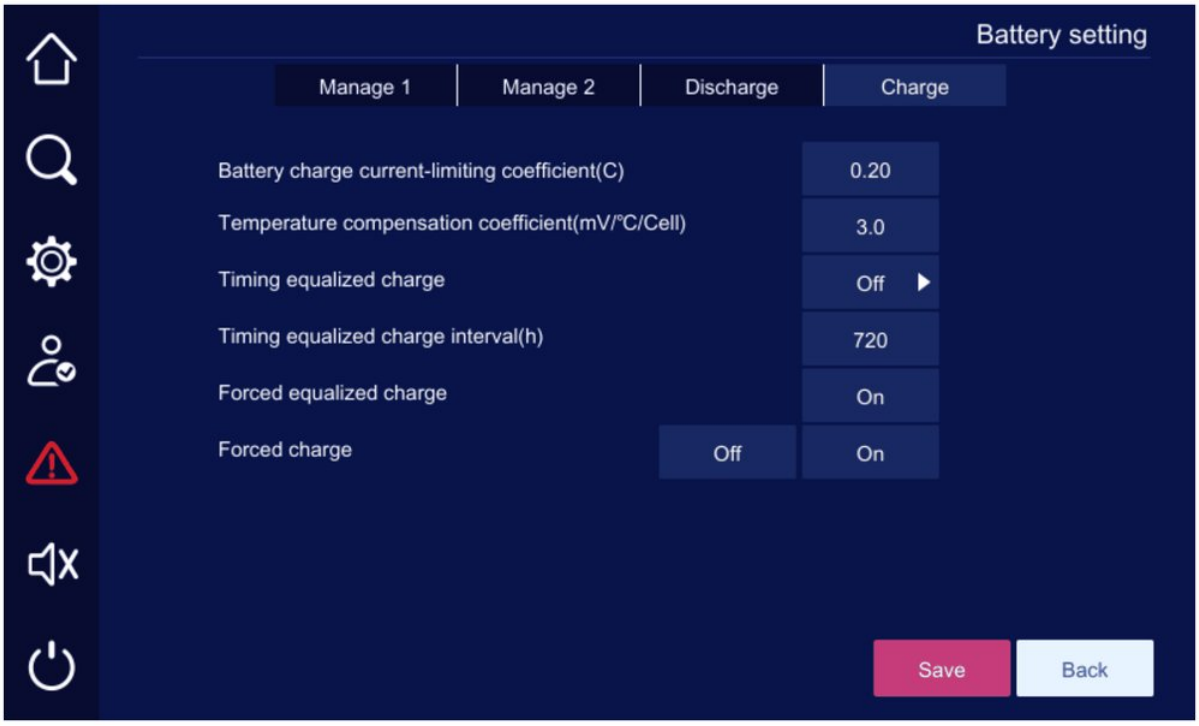

FIGURE 5-34 Battery setting-charge manage page

TABLE 5-6 Charge manage setting description

No.	Item	Description	Parameter setting
1	Forced equalized charge	Force the battery in the floating charge status or sleep status to the equalized charge status.	It can be set as on or off.
2	Forced charge	Keep the battery in the equalized charge status up to 10min.	It can be set as on or off.

5.7.3 Battery Test

On the setting manage page, tap the  icon to enter the battery test page.

FIGURE 5-35 Battery test page

TABLE 5-7 Battery test setting description

No.	Item	Description
1	Standard test	Shallow discharge the battery. The battery cannot be used when it is not running for a long time. To verify the health of battery, perform a discharge test on the battery without mains power failure.
2	Deep test	Depth discharge the battery. Discharge battery to the undervoltage alarm point. You can learn more about the battery performance and the battery health via depth discharge.
3	Cancel test	Manually cancel the standard test status and the deep test status.

5.7.4 Output Setting

On the setting manage page, tap the  icon to enter the output setting page.

FIGURE 5-36 Output setting page

TABLE 5-8 Output setting description

No.	Item	Description	Parameter setting
1	Max. bypass voltage	When the deviation of the bypass voltage from the rated voltage is greater than the set value, the system displays the "bypass overvoltage" alarm, and the bypass is not available.	It can be set as +10%, +15%, +20% or +25%. Default is +15%.
2	Min. bypass voltage	When the deviation of the bypass voltage from the rated voltage is smaller than the set value, the system displays the "bypass undervoltage" alarm, and the bypass is unavailable.	It can be set as -10%, - 15%, -20% and -30%. Default is -20%.
3	Bypass frequency range	When the deviation of the bypass frequency from the rated frequency is greater than the set value, the system displays the "bypass overfrequency" or "bypass underfrequency" alarm, and the bypass is not available.	It can be set as ±2%, ±4%, ±6%, ±8%, ±10% and ±20%. Default is ±10%.
4	ECO voltage range	When the deviation of the bypass voltage from the rated voltage in ECO mode is	It can be set as ±5%, ±10% or ±15%. Default is
No.	**Item**	**Description**	**Parameter setting**
		greater than the set value, the system displays the "ECO overvoltage" or "ECO undervoltage" alarm, and ECO mode switches to inverter mode.	±15%.
5	ECO frequency range	When the deviation of the bypass frequency from the rated frequency in ECO mode is greater than the set value, the system displays the "ECO overfrequency" or "ECO underfrequency" alarm, and ECO mode switches to inverter mode.	It can be set as ±2% or ±4%. Default is ±2%.

5.7.5 Smart Mode

On the setting manage page, tap the  icon to enter the smart mode page.

FIGURE 5-37 Smart mode page

5.7.6 Dry Contact

On the setting manage page, tap the  icon to enter the dry contact page.

FIGURE 5-38 Dry contact page

> **NOTE**
> For the input dry contact definition, please refer to Table 2-11, and for the output dry contact definition, please refer to Table 2-12.

5.7.7 Screen Setting

On the setting manage page, tap the  icon to enter the screen setting page.

FIGURE 5-39 Screen setting page 1

FIGURE 5-40 Screen setting page 2

5.7.8 Password Setting

On the setting manage page, tap the 

icon to enter the password setting page.

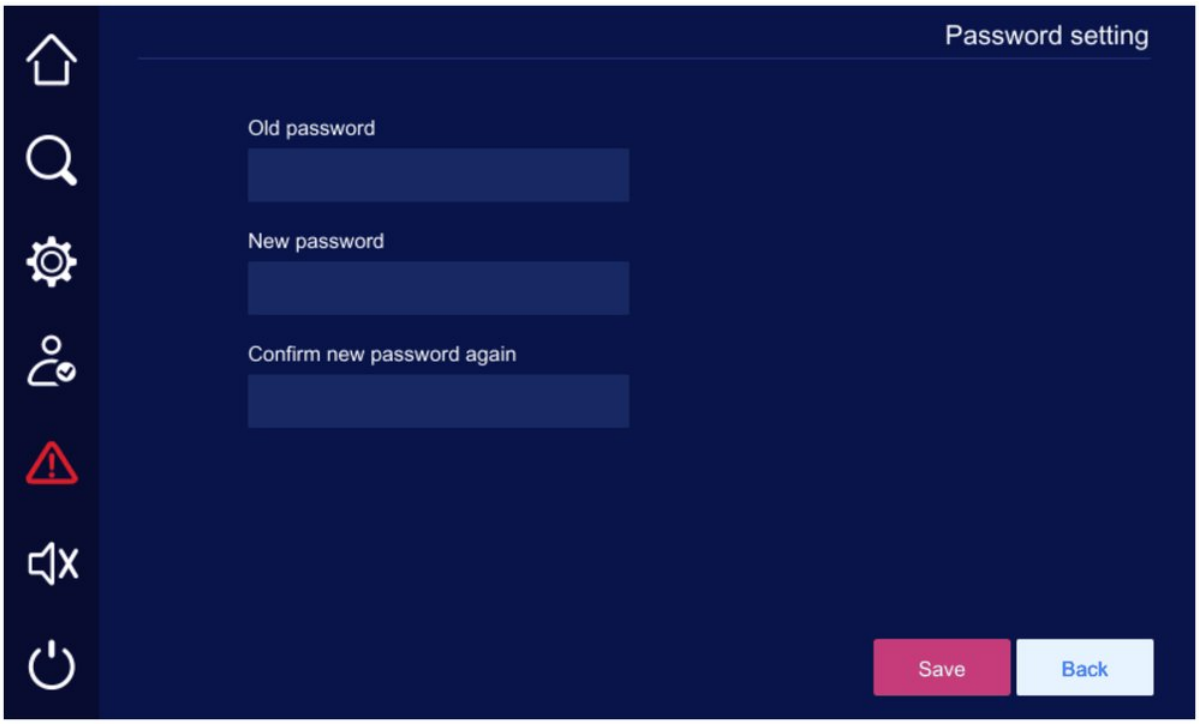

FIGURE 5-41 Password setting page

> **NOTE**
> User initial password is 111.

5.7.9 Communication Setting

On the setting manage page, tap the 

icon to enter the communication setting page.

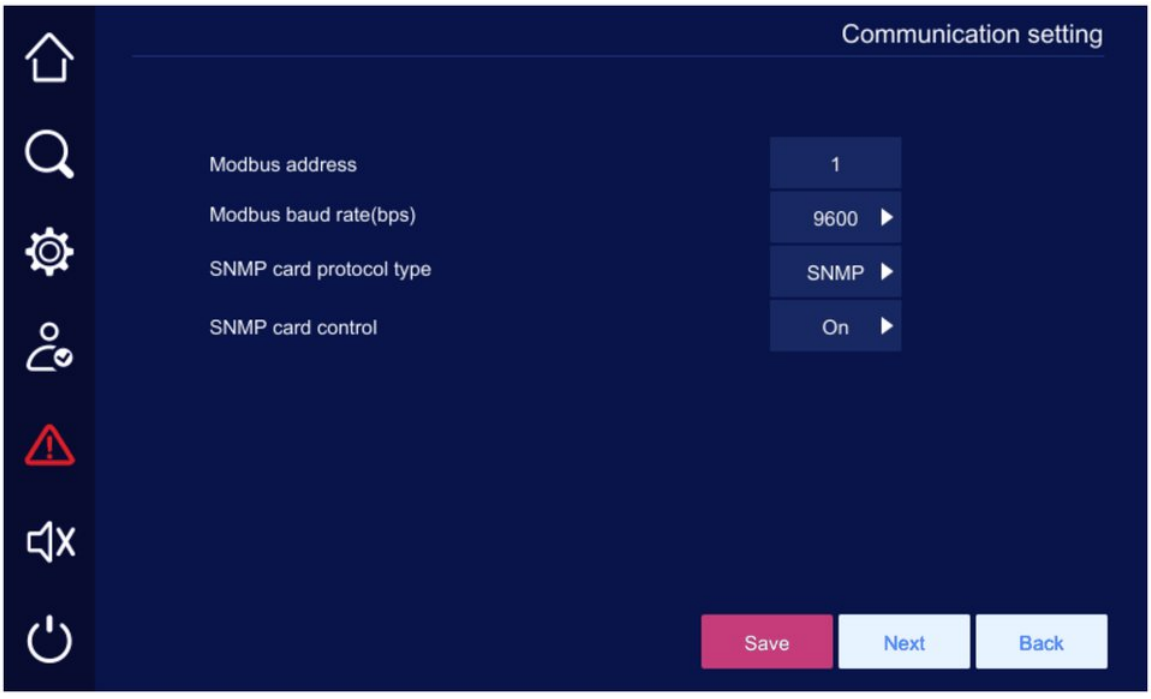

FIGURE 5-42 Communication setting page

TABLE 5-9 Communication setting description

No.	Item	Description	Parameter setting
1	Modbus address	Serial port address for communication.	It can be set from 1 to 247, default is 1.
2	Modbus baud rate (bps)	Match the onsite network conditions when communication.	It can be set to 2400, 4800, 9600 or 19200, default is 9600.
3	SNMP card protocol type	-	It can be set to SNMP or Modbus, default is SNMP.
4	SNMP card control	-	It can be set to on or off.

5.7.10 Record Manage

On the setting manage page, tap the 

icon to enter the record manage page.

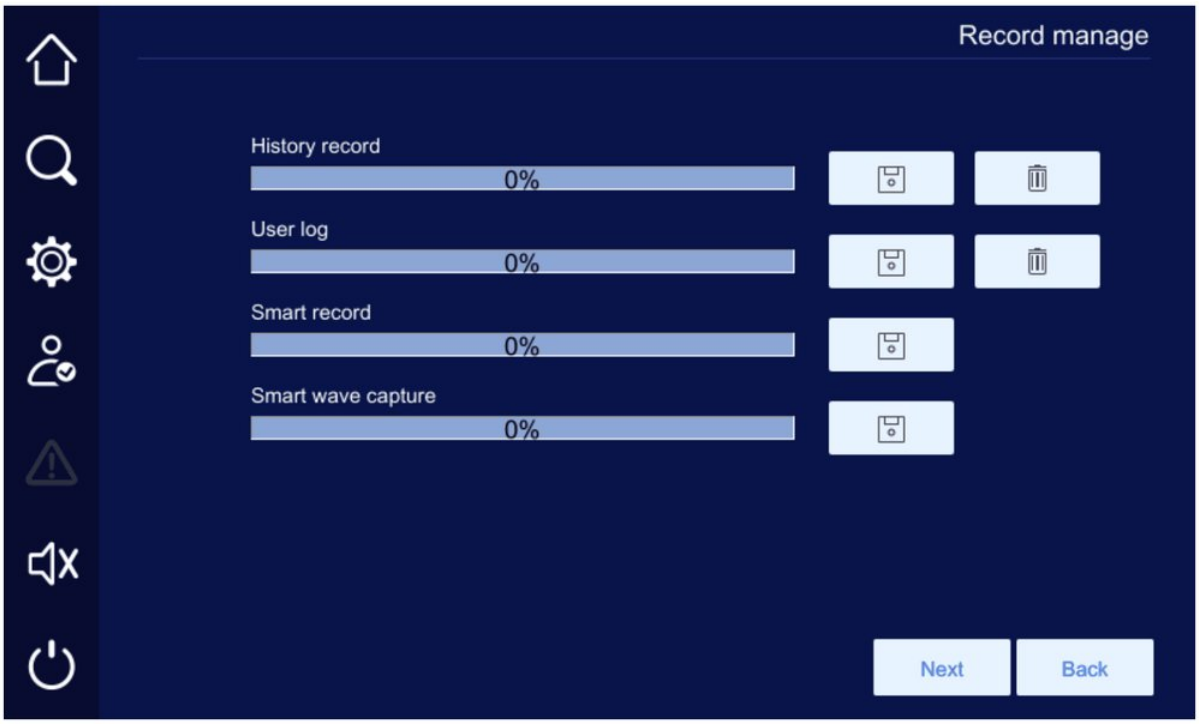

FIGURE 5-43 Record manage page

5.7.11 Energy Storage UPS

On the setting manage page, tap the " 

" icon to enter the energy storage UPS page.

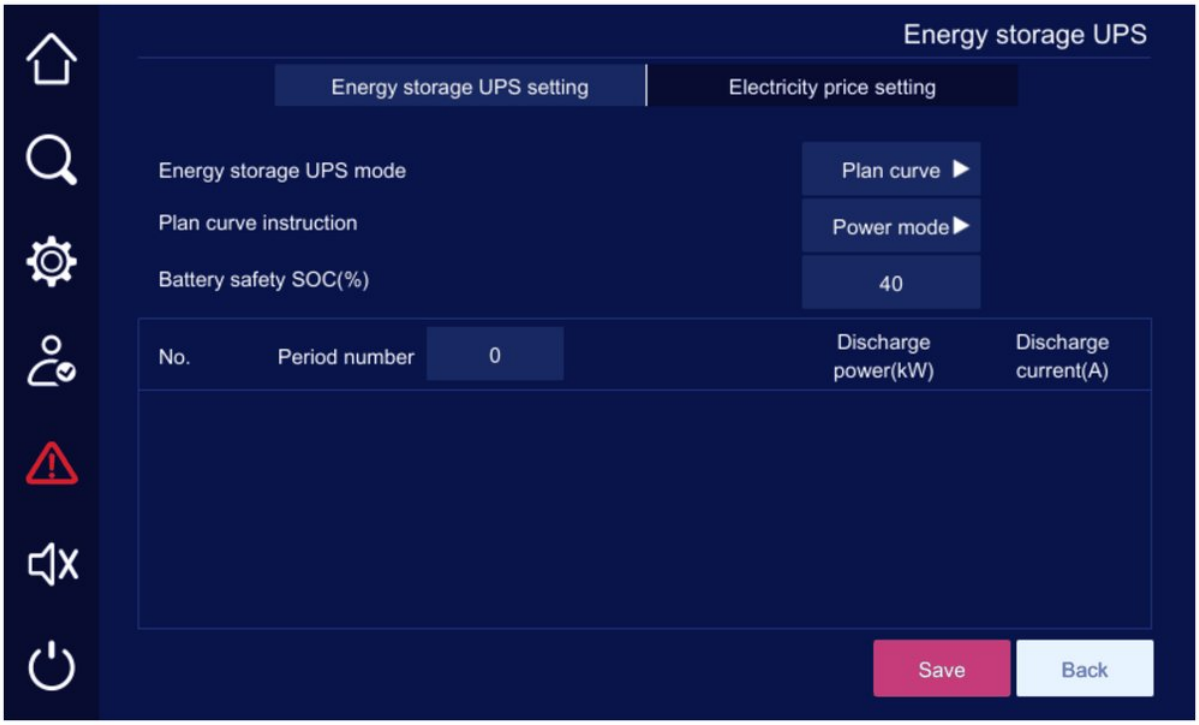

FIGURE 5-44 Energy storage UPS page.

5.8 Inverter ON/OFF

On the menu bar, tap the icon to enter the inverter ON/OFF page. When the system is in the inverter power-off status, tap the icon to enter the inverter power-on page, and then tap OK button to power on the inverter.

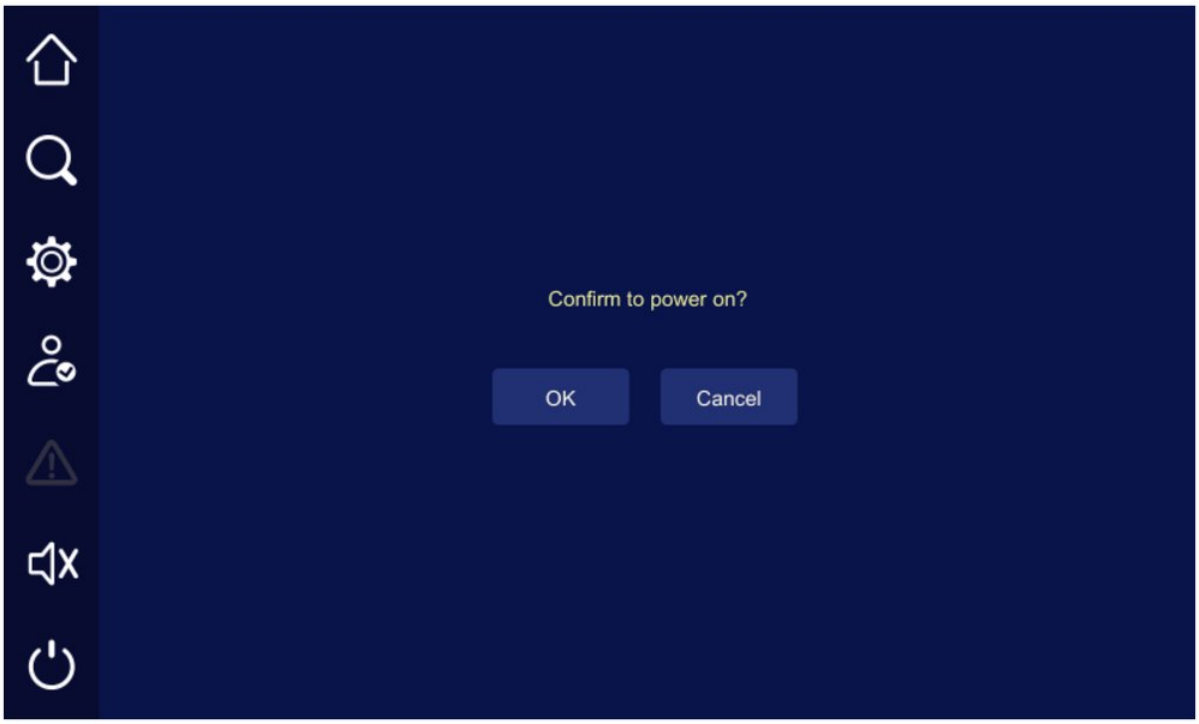

FIGURE 5-45 Inverter power-on page

CHAPTER 6

06 Maintenance and Troubleshooting

IN THIS CHAPTER

6.1 Manual Maintenance Operation
6.2 Replace Power Module
6.3 Maintenance Guide
6.4 Battery Test
6.5 Troubleshooting

6.1 Manual Maintenance Operation

When it is necessary to maintain the load without losing power, the following instructions should be followed.

CAUTION

Only qualified professionals may perform the following operations. AEC accepts no responsibility for problems caused by unauthorised personnel.

6.1.1 Switching from Inverter Mode to External Maintenance Bypass Mode

CAUTION

If the bypass is normal, the system will enter bypass mode after the inverter is shut down. If the bypass is abnormal, the system will enter a no-output mode after the inverter is shut down. Before performing the inverter shutdown operation, please ensure that the load has been turned off and can withstand a power outage at any time.

PROCEDURE

1. Power off inverter.

- Power-off method 1: OFF combination button on the operation panel

Press the OFF combination button on the operation panel for 3s.

- Power-off method 2: Touch screen

On the home page, tap the icon to enter the inverter power-off page, and then tap OK button.

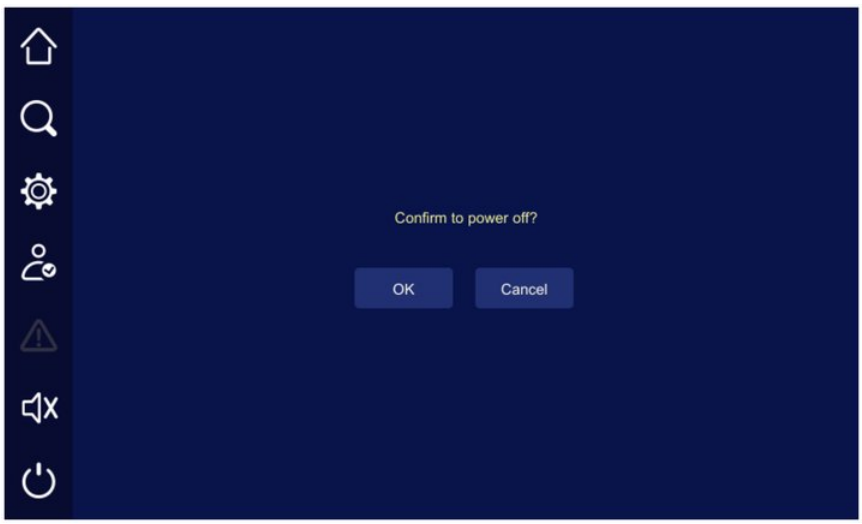

FIGURE 6-1 Inverter power-off page

The inverter indicator on the operation panel is off, and the bypass indicator on the operation panel is green on, and the system switches from inverter mode to bypass mode.

2. Ensure that the inverter is powered off again, and then switch on the external maintenance bypass switch. At this time, the touch screen displays "Maintenance bypass open".
3. Switch off the external battery switch, mains switch, bypass switch and output switch of UPS one by one.

> **NOTE**
> If the distribution cabinet is optionally equipped, the switch inside the distribution cabinet also needs to be switched off.

4. Wait until the touch screen and LED indicators on the operation panel are off. About 15 minutes, it can perform maintenance.

> **CAUTION**
> - Do not switch on the external output switch when UPS is in maintenance bypass mode.
> - High voltage exists in the input and output copper bars when UPS is in the maintenance bypass mode, and accidental touching may result in electric shock.

6.1.2 Switching from External Maintenance Bypass Mode to Inverter Mode

> **CAUTION**
> Before switching from maintenance bypass mode to inverter mode ensure that the bypass input is normal.

PROCEDURE

1. Switch on the bypass switch and the mains switch one by one.
2. Place the ready switch of the bypass module in status, switch on the external battery switch.
3. Switch on the external output switch, the output information icon turns to icon on the home page of touch screen.
4. Wait until the bypass indicator on the operation panel is on in green color, switch off the external maintenance bypass switch, "Maintenance bypass on" prompt on the touch screen disappears, system stop beeping.
5. Place the ready switches of all power modules in status.
6. Power on inverter.

Wait for the run indicators of all power modules are green on and flashing slowly, perform the inverter power-on operation.

- Power-on method 1: **ON** combination button on the operation panel

Press the **ON** combination button on the operation panel for 3s.

- Power-on method 2: Touch screen

On the home page, tap the icon to enter the inverter power-on page, and then tap **OK** button.

The inverter indicator on the operation panel is on in green color. About 10s later, the inverter startup is completed, the bypass indicator on the operation panel is off, and the system switches from bypass mode to inverter output mode.

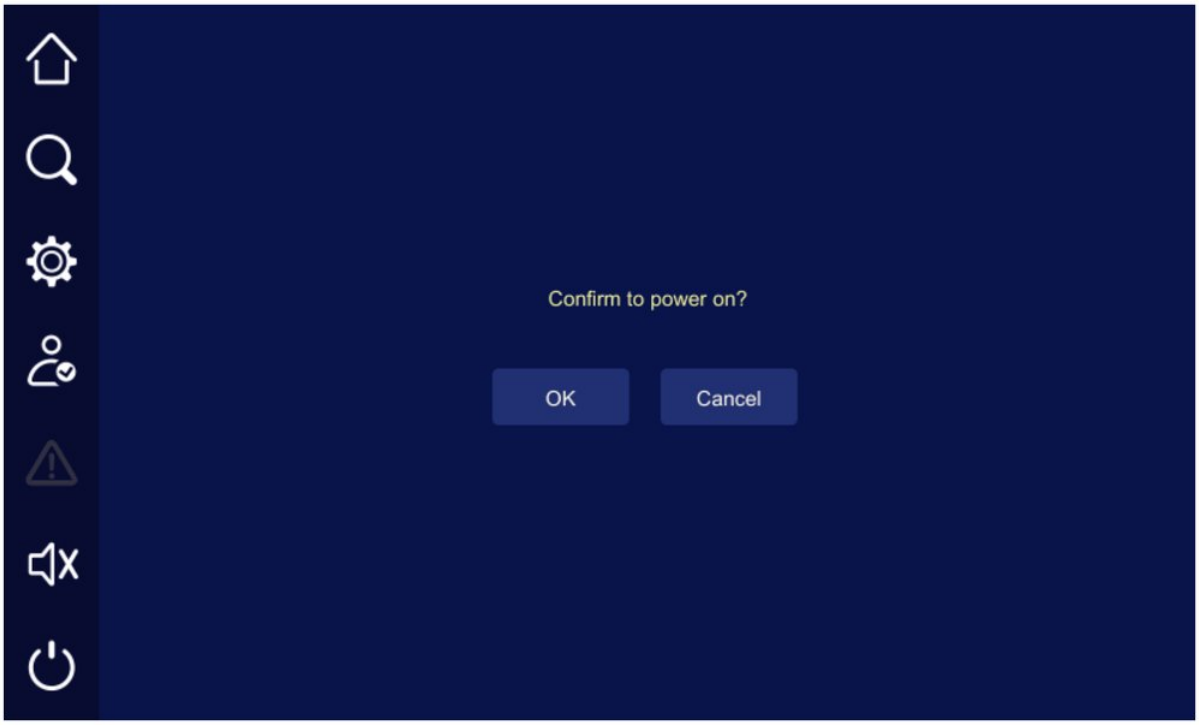

FIGURE 6-2 Inverter power-on page

6.2 Replace Power Module

CAUTION

- Move the power module by three installers or use a suitable moving tool (e.g. lift truck).
- Prevent foreign objects from the connectors of power module and cabinet.
- Power modules are plugged and unplugged from cabinet via connectors. Push the power modules into cabinet slowly and evenly. Do not push power modules vigorously. Otherwise, the connectors may be deformed, resulting in poor connection and other faults.
- Do not pull out power modules quickly after it is pushed into place.
- When using the lift truck, ensure that the wheels of the lift truck are locked and there are no objects on the workbench.
- The lift truck can only carry power modules over short distances on solid and flat ground. Do not use the lift truck as a module transport tool on slopes, potholes and other poor ground.

PROCEDURE

1 Open the front doors of UPS with a key.

2 Dismantle the power module to be replaced.

1. Place the ready switch of the power module in status.
2. Dismantle the screws between power module and cabinet.
3. Raise the lifting truck to the position of the power module that needs to be replaced, slowly pull out the power module through the handles. When the power module reaches the limit lock position, press the limit lock to smoothly pull out the power module. Gently lift the power module onto the lifting truck.

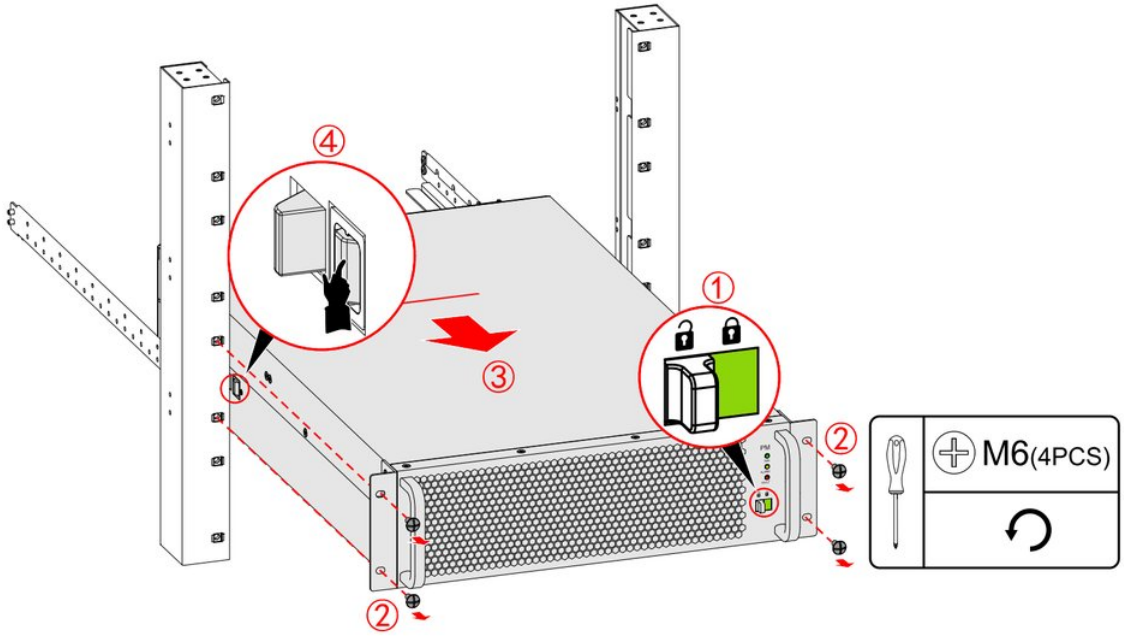

FIGURE 6-3 Dismantle power module

3 Install a new power module.

1. Unpack the power module.
2. Place the ready switch of the power module in 🔓 status.
3. Lift the power module onto the lift truck, then lift the lift truck to the position of the power module to be replaced, and push power module into cabinet slowly. When the power module is in contact with the cabinet connector, gently push the power module into the cabinet.
4. Fasten the screws between power module and cabinet.
5. Place the ready switch of the power module in 🔒 status.

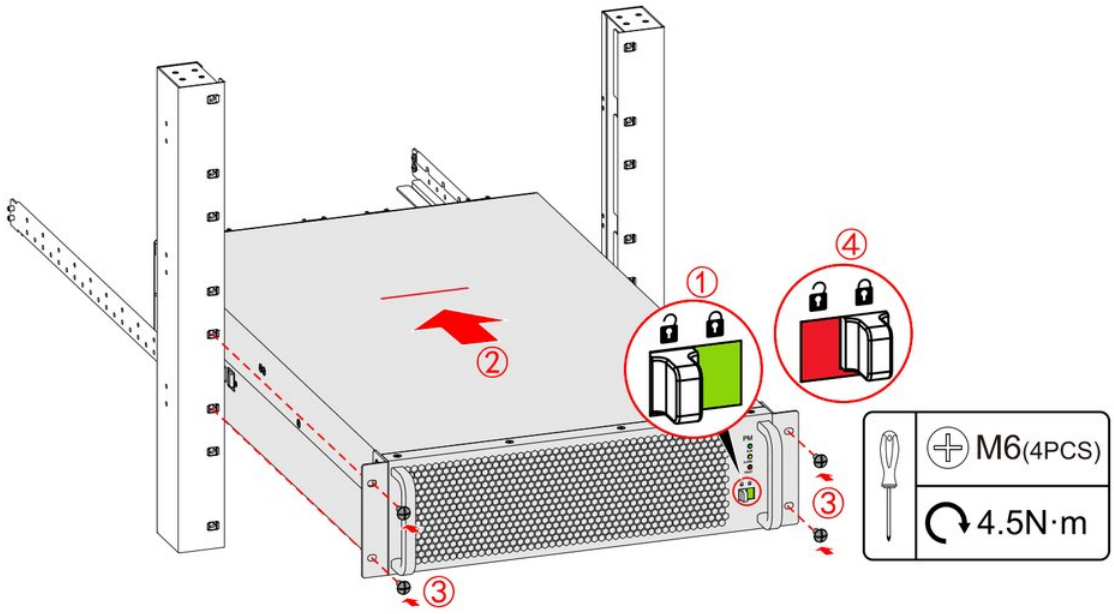

FIGURE 6-4 Install power module

4 Close the front door of the UPS.

6.3 Maintenance Guide

6.3.1 UPS Maintenance

WORKING ENVIRONMENT CHECKLIST

No.	Item	Acceptance criteria	Solution	Check interval
1	Device room environment	• The fireproof door of the device room remains closed, and air conditioner works normally without interruption. The device room is airtight, and the e is not in a direct ventilation nt. • There is no dust or flammable sundries in the device room.	t • Check method: Visual inspection • ▌Troubleshooting: Rectify the fault Monthly based on the acceptance criteria.	

No.	Item	Acceptance criteria	Solution	Check interval
2	Rodent-proof	Rodent-proof measures are taken in the device room, such as rat guard and rat trap.	• Check method: Visual inspection • Troubleshooting: Rectify the fault based on the acceptance criteria.	Monthly
3	Heat dissipation space	The distance between the device and surrounding objects meet the space requirements.	• Check method: Visual inspection (using a measuring tape) • Troubleshooting: Rectify the fault based on the acceptance criteria.	Monthly
4	Installation position	There is no air outlet or refrigerant copper pipe of the air conditioner placed above the device, and no other water leakage risks exist.	• Check method: Visual inspection • Troubleshooting: Rectify the fault based on the acceptance criteria.	Monthly
5	Ambient temperature	Actual temperature: _____ °C (normal range: 0 °C~40 °C)	• Check method: Visual inspection (using a hygrothermograph) • Troubleshooting: Check the air conditioner's operating status and restore normal operation.	Monthly
6	Ambient humidity	Actual humidity:_____% RH (normal range: 0%RH~95% RH, non-condensing)	• Check method: Visual inspection (using a hygrothermograph) • Troubleshooting: Check the air conditioner's operating status and restore normal operation.	Monthly

COMPONENT CHECKLIST

No.	Item	Acceptance criteria	Solution	Check interval
1	Installation	The device is installed properly and arranged neatly, and screws are tightened.	Check method: Visual Monthly inspection • Troubleshooting: Rectify the fault based on the acceptance criteria.	
2	Appearance	• Wipe the device surface by a white paper and the paper does not turn black. • The device is not rusty or deformed.	• Check method: Visual inspection • Troubleshooting: Rectify the fault based on the acceptance criteria. Clean the dust from the air filter or replace the air filter during dust removal.	Quarterly
3	Cabinet wire hole protection	The wire holes of the cabinet have been fully sealed using the standard sealing plates, and rodentproof measures are taken.	• Check method: Visual inspection • Troubleshooting: Rectify the fault based on the acceptance criteria.	Quarterly
4	Air outlet	The air outlet is not blocked.	• Check method: Visual inspection • Troubleshooting: Rectify the fault based on the acceptance criteria.	Quarterly
5	Metal scraps in the cabinet	There is no copper scrap or other foreign matter in the cabinet.	• Check method: Visual inspection • Troubleshooting: Rectify the fault based on the acceptance criteria.	Quarterly
6	Grounding wire	The grounding wire is reliably connected to the grounding bar in the device room, and the screws are tightened.	• Check method: Visual inspection • Troubleshooting: Tighten the screws.	Yearly
7	Through current capacity	Switches and wires meet load requirements. The through current capacity of wires is greater than the switch specifications.	• Check method: Visual inspection • Troubleshooting: After the device is powered off, replace the switches or wires.	Yearly
8	Power wire	• The wires and insulation layer are intact. • The screws at the wire connection points are tightened, and the tightening marks on the screws do not deviate. • The wire connections are free from black marks and noticeable sparks.	• Check method: Visual inspection • Troubleshooting: After the device is powered off, replace the wires or fasten the screws.	Yearly
9	Signal wire	• The wires and insulation layer are intact. • Signal wire terminals are securely connected.	• Check method: Visual inspection • Troubleshooting: Replace the wires.	Yearly

RUNNING STATUS CHECKLIST

No.	Item	Acceptance criteria	Solution	Check interval
1	Grid	Input voltage: 380VAC/400VAC/415VA C (line voltage) • Output voltage: 380VAC/400VAC/415VA C±1% (line voltage) • Input frequency: 40Hz~70Hz	• Check method: Visual Monthly inspection (View the running information on the touch screen.) • Troubleshooting: If the input voltage is normal, check the grid status or correct the input wire connection. If the output voltage is abnormal, check the alarm information on the touch screen and rectify the fault.	
2	Working status	The status icons on the touch screen indicate that all units are operating properly, all operating parameters are within their normal ranges, and no fault or alarm information is displayed.	• Check method: Visual inspection (Check the system status on the touch screen.) • Troubleshooting: Check the alarm information on the touch screen and rectify the fault.	Monthly
3	Parameter setting	The configuration of the output voltage grade, frequency, number of batteries, and battery capacity meets requirements.	• Check method: Visual inspection • Troubleshooting: Correct the parameter settings.	Quarterly
4	Status record	The three-phase load rate and output power factor are recorded.	• Check method: Visual inspection (Check the system status on the touch screen.) • Troubleshooting: Equalize the three-phase loads.	Quarterly

6.3.2 Lead-Acid Battery Maintenance

WORKING ENVIRONMENT CHECKLIST

No.	Item	Acceptance criteria	Solution	Check interval
1	Device room environment	• The fireproof door of the device room remains closed, and the air conditioner works normally without interruption. • There is no dust or flammable sundries in the device room.	• Check method: Visual inspection • Troubleshooting: Rectify the fault based on the acceptance criteria.	Monthly
2	Rodent- proof	Rodent-proof measures are taken in the device room, such as rat guard and rat trap.	• Check method: Visual inspection • Troubleshooting: Rectify the fault based on the acceptance criteria.	Monthly
3	Installation position	There is no air outlet or refrigerant copper pipe of the air conditioner placed above the device, and no other water leakage risks exist.	• Check method: Visual inspection • Troubleshooting: Rectify the fault based on the acceptance criteria.	Monthly
4	Ambient temperature	Actual temperature: _____ °C (normal range: 20 °C~30 °C)	• Check method: Visual inspection (using a hygrothermograph) • Troubleshooting: Check the air conditioner's operating status and restore normal operation.	Monthly
5	Ambient humidity	Actual humidity: _____%RH (normal range: 30%RH~80%RH, non- condensing)	• Check method: Visual inspection (using a hygrothermograph) • Troubleshooting: Check the air conditioner's operating status and restore normal operation.	Monthly

COMPONENT CHECKLIST

No.	Item	Acceptance criteria	Solution	Check interval
1	Installation	The device is installed properly and arranged neatly, and screws are tightened.	• Check method: Visual inspection • Troubleshooting: Rectify the fault based on the acceptance criteria.	Monthly
2	Appearance of the battery rack or cabinet	No dust, rust, or deformation.	• Check method: Visual inspection • Troubleshooting: Rectify the fault based on the acceptance criteria.	Monthly
3	Battery appearance	• Batteries are clean and free from stains. • Battery wiring terminals are intact. • Batteries are intact and free of damage, deformation, bulges, and cracks. • Batteries have no acid or electrolyte leakage (If electrolyte leakage occurs, there will be a pungent smell).	• Check method: Visual inspection • Troubleshooting: contact AEC technical support.	Monthly
4	Metal scrap	There is no copper scrap or other conductive foreign matter.	• Check method: Visual inspection • Troubleshooting: Rectify the fault based on the acceptance criteria.	Monthly
5	Grounding wire of the battery rack or cabinet	The grounding wire is reliably connected to the grounding bar in the device room, and the screws are tightened.	• Check method: Visual inspection • Troubleshooting: Tighten the screws.	Yearly
6	Battery wires	• The wires and insulation layer are intact. • The screws at the wire connection points are tightened, and the tightening marks on the screws do not deviate. • The wire connections are free from black marks and noticeable sparks.	• Check method: Visual inspection • Troubleshooting: After the device is powered off, replace the wires or fasten the screws.	Quarterly
7	Battery connection reliability	• After the equipment is powered off, check the reliability of each connection point from positive terminals to negative terminals. All points are connected reliably. • In copper bar check, use a torque wrench to check the tightening torque for each battery screw. The torque meets the requirements of the battery manufacturer. After checking that the battery screws meet the requirements, mark the screws for later check.	• Check method: (1) Visual inspection (2) Verify (After the device is powered off, use an insulated torque wrench to verify the torque of screws.) • Troubleshooting: Rectify the fault based on the acceptance criteria.	Yearly

RUNNING STATUS CHECKLIST

No.	Item	Acceptance criteria	Solution	Check interval
1	Working status	The touch screen shows that all batteries are running properly, battery running parameters are within their normal ranges, and no battery fault or alarm information is displayed.	• Check method: Visual inspection (Check the system status on the touch screen.) • Troubleshooting: View the alarm information on the touch screen and handle the alarm.	Monthly
2	Battery management parameters	Battery management parameter settings and battery charge and discharge conditions meet the requirements of the battery manufacturer. The battery operating temperature is lower than the ambient temperature plus +20°C.	• Check method: Visual inspection (Check the parameters displayed on the touch screen.) • Troubleshooting: Correct the parameter settings or rectify battery operating temperature abnormality.	Quarterly
3	Battery voltage	• Battery equalized voltage=Cell equalized charge voltage (2.35V/cell±0.02V/cell) ×6×+/-12V number of batteries • Battery floating voltage= Cell floating voltage (2.27V/cell±0.02V/cell) ×6×+/- 12V number of batteries	• Check method: (1) Visual inspection (Check the parameters displayed on the touch screen.) (2) Measure (Use a multimeter to measure the output voltage of the battery pack) • Troubleshooting: Correct the equalized charge voltage and floating charge voltage of UPS. If the difference between the battery pack voltage displayed on the touch screen and the measured value is greater than 1%, contact AEC technical support.	Quarterly
4	Standard test (suggestion)	During standard test, no fault or alarm is displayed on the touch screen.	• Check method: Perform a standard test and view the alarm information on the touch screen. • Troubleshooting: View the alarm information on the touch screen and handle the alarm.	Quarterly
5	Deep test (suggestion)	During deep test, no fault or alarm is displayed on the touch screen.	• Check method: Perform a deep test and view the alarm information on the touch screen. • Troubleshooting: View the alarm information on the touch screen and handle the alarm.	Yearly

6.3.3 Li-battery Maintenance

WORKING ENVIRONMENT CHECKLIST

No.	Item	Acceptance criteria	Solution	Check interval
1	Device room environment	• The fireproof door of the device room remains closed, and the air conditioner works normally without interruption. There is no dust or criteria. flammable sundries in the device room.	• Check method: Visual inspection • Troubleshooting: Rectify the fault based on the acceptance	Monthly
2	Rodent-proof	Rodent-proof measures are taken in the device room, such as rat guard and rat trap.	• Check method: Visual inspection • Troubleshooting: Rectify the fault based on the acceptance criteria.	Monthly
3	Installation position	There is no air outlet or refrigerant copper pipe of the air conditioner placed above the device, and no other water leakage risks exist.	• Check method: Visual inspection • Troubleshooting: Rectify the fault based on the acceptance criteria.	Monthly
4	Ambient temperature	Actual temperature: _____ °C (normal range: 20 °C~30 °C)	• Check method: Visual inspection (using a hygrothermograph) • Troubleshooting: Check the air conditioner's operating status and restore normal operation.	Monthly
5	Ambient humidity	Actual humidity: _____%RH (normal range: 30%RH~80%RH, non- condensing)	• Check method: Visual inspection (using a hygrothermograph) • Troubleshooting: Check the air conditioner's operating status and restore normal operation.	Monthly

COMPONENT CHECKLIST

No.	Item	Acceptance criteria	Solution	Check interval
1	Installation	The device is installed properly and arranged neatly, and screws are tightened.	• Check method: Visual inspection • Troubleshooting: Rectify the fault based on the acceptance criteria.	Monthly
2	Appearance of the battery rack or cabinet	No dust, rust, or deformation.	• Check method: Visual inspection • Troubleshooting: Rectify the fault based on the acceptance criteria.	Monthly
3	Battery appearance	• Batteries are clean and free from stains. • Battery wiring terminals are intact. • Batteries are intact and free of damage, deformation, bulges, and cracks.	• Check method: Visual inspection • Troubleshooting: contact AEC technical support.	Monthly
4	Metal scrap	There is no copper scrap or other conductive foreign matter.	• Check method: Visual inspection • Troubleshooting: Rectify the fault based on the acceptance criteria.	Monthly
5	Grounding wire of the battery rack or cabinet	The grounding wire is reliably connected to the grounding bar in the device room, and the screws are tightened.	• Check method: Visual inspection • Troubleshooting: Tighten the screws.	Yearly
6	Battery wires	• The wires and insulation layer are intact. • The screws at the wire connection points are tightened, and the tightening marks on the screws do not deviate. • The wire connections are free from black marks and noticeable sparks.	• Check method: Visual inspection • Troubleshooting: After the device is powered off, replace the wires or fasten the screws.	Quarterly
7	Battery connection reliability	• After the equipment is powered off, check the reliability of each connection point from positive terminals to negative terminals. All points are connected reliably. • In copper bar check, use a torque wrench to check the tightening torque for each battery screw. The torque meets the requirements of the battery manufacturer. After checking that the battery screws meet the requirements, mark the screws for later check.	• Check method: (1) Visual inspection (2) Verify (After the device is powered off, use an insulated torque wrench to verify the torque of screws.) • Troubleshooting: Rectify the fault based on the acceptance criteria.	Yearly

RUNNING STATUS CHECKLIST

No.	Item	Acceptance criteria	Solution	Check interval
1	Working status	The touch screen shows that all batteries are running properly, battery running parameters are within their normal ranges, and no battery fault or alarm information is displayed.	• Check method: Visual inspection (Check the system status on the touch screen.) • Troubleshooting: View the alarm information on the touch screen and handle the alarm.	Monthly
2	Battery management parameters	Battery management parameter settings and battery charge and discharge conditions meet the requirements of the battery manufacturer. The battery operating temperature is lower than the ambient temperature plus +20°C.	Check method: Visual Quarterly inspection (Check the parameters displayed on the touch screen.) • Troubleshooting: Correct the parameter settings or rectify battery operating temperature abnormality.	
3	Battery voltage	Battery equalized voltage=Cell equalized charge voltage (3.50V/cell±0.02V/cel) × +/- number of batteries	• Check method: (1) Visual inspection (Check the parameters displayed on the touch screen.) (2) Measure (Use a multimeter to measure the output voltage of the battery pack) • Troubleshooting: Correct the equalized charge voltage of UPS. If the difference between the battery pack voltage displayed on the touch screen and the measured value is greater than 1%, contact AEC technical support.	Quarterly
5	Standard test (suggestion)	During standard test, no fault or alarm is displayed on the touch screen.	• Check method: Perform a standard test and view the alarm information on the touch screen. • Troubleshooting: View the alarm information on the touch screen and handle the alarm.	Quarterly
6	Deep test (suggestion)	During deep test, no fault or alarm is displayed on the touch screen.	Check method: Perform a deep Yearly test and view the alarm information on the touch screen. • Troubleshooting: View the alarm information on the touch screen and handle the alarm.	

6.4 Battery Test

6.4.1 Standard Test

Perform a shallow discharge on the battery. Batteries that have not been in operation for an extended period may become unusable. To verify the health of the batteries, a discharge test should be conducted without interrupting the mains power supply.

> **NOTE**
> Before performing the standard test, please ensure:
>
> - UPS mains input is normal.
> - Battery is connected properly.
> - Battery is in floating charge status.
> - Load ratio is not less than 15%.

1 Tap the icon on the home page of the touch screen, set "Battery test time" in "Battery setting> Manage 1" to "10".

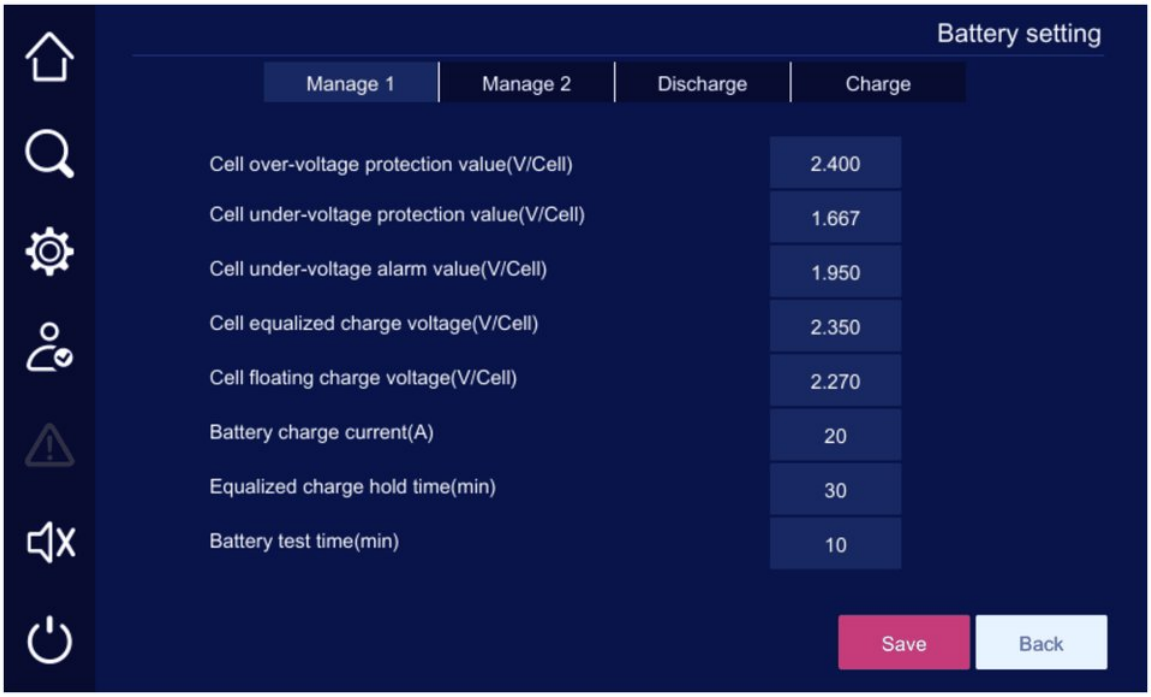

FIGURE 6-5 Battery test time setting

2 Tap the icon on the home page of the touch screen, tap "Battery test>Standard test" to start the test.

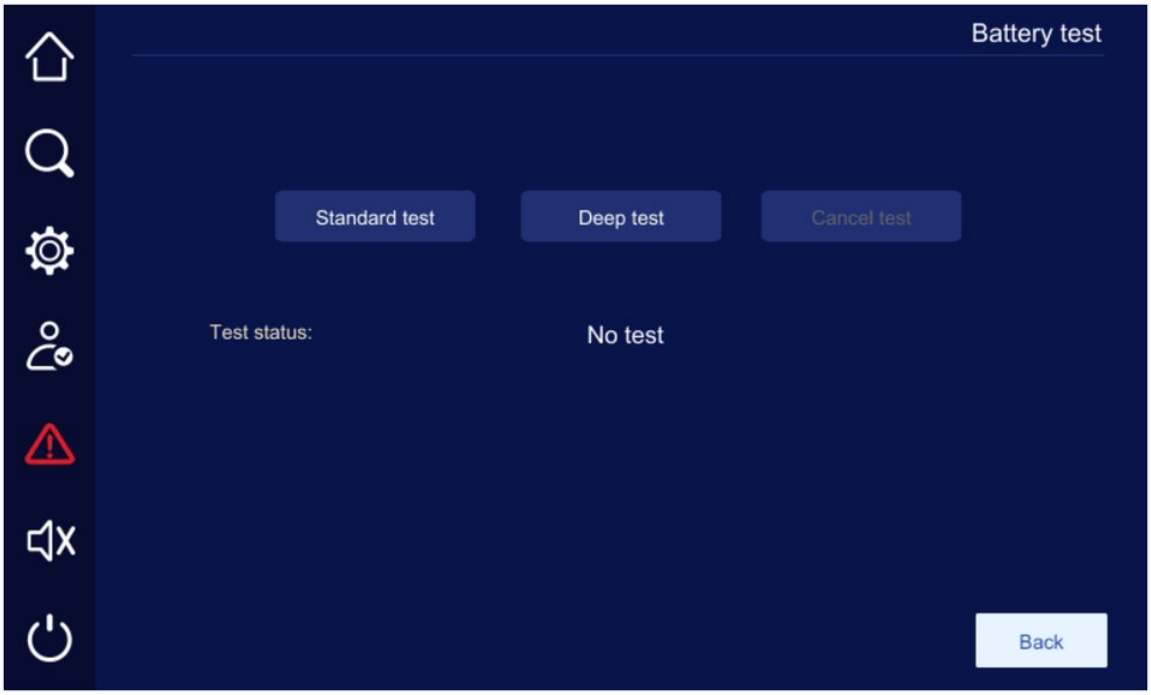

FIGURE 6-6 Standard test

NOTE

When the battery test meets the following conditions, the standard test will be exited automatically.

- Battery voltage is lower than the battery voltage alarm point.
- Mains voltage is lower than the rated mains voltage * 0.9.
- No output or output overload.
- There has an abnormal alarm.

6.4.2 Deep Test

Perform a deep discharge on the batteries. Discharge the batteries until the low-voltage alarm point is reached. This deep discharge method allows for a more accurate assessment of battery performance, providing insights into the overall health of the batteries.

NOTE

Before performing the deep test, please ensure:

- UPS mains input is normal.
- Battery is connected properly.
- Battery is in floating charge status.
- Load ratio is not less than 15%.

Tap the  icon on the home page of the touch screen, tap " Battery test>Deep test " to start the test.

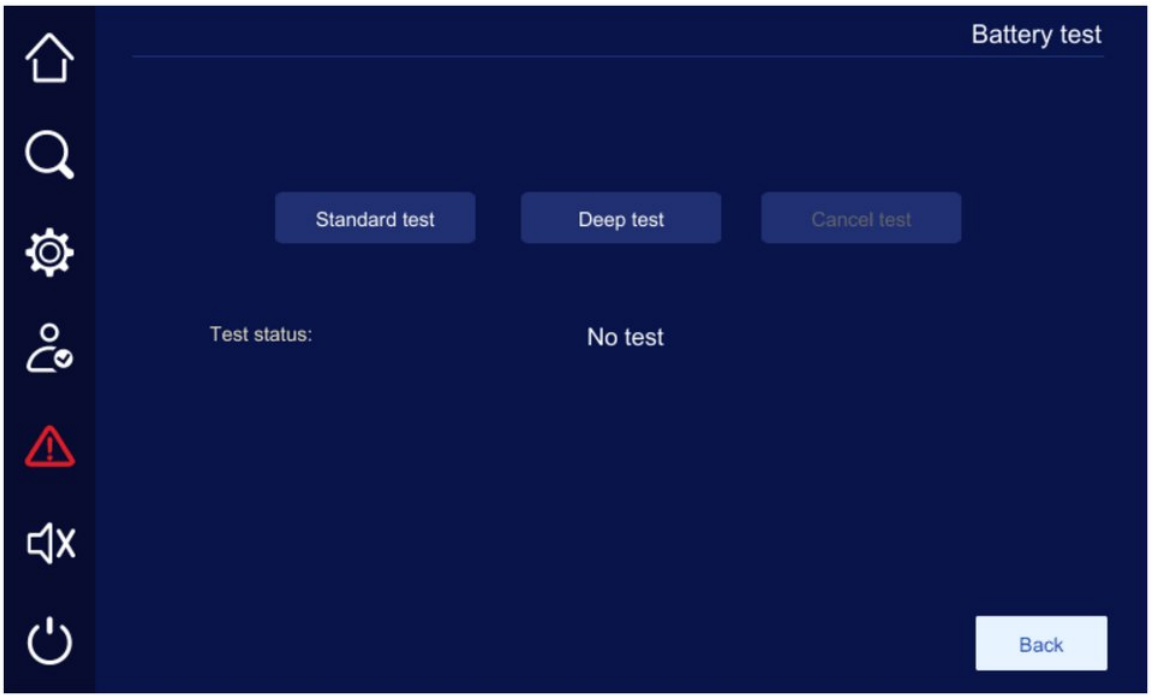

FIGURE 6-7 Deep test

NOTE

When the battery test meets the following conditions, the deep test will be exited automatically.

- Battery voltage is lower than the battery voltage alarm point.
- Mains voltage is lower than the rated mains voltage * 0.9.
- No output or output overload.
- There has an abnormal alarm.

6.5 Troubleshooting

6.5.1 UPS Troubleshooting

⚠ CAUTION

- When the UPS encounters a fault, corresponding alarm information will be displayed on the touch screen. UPS can be powered on only after critical alarms are resolved, otherwise, it may lead to further faults or device damage.
- It is prohibited to clear alarms by unplugging and reinserting modules.
- Confirm that the faulty module requires replacement before removing it. Once removed, the module must not be reinserted.

TABLE 6-1 Solutions to common faults

No.	Fault Phenomenon	Possible cause
1	Mains is normal, but UPS works in battery inverter status, the buzzer beeps intermittently.	The contacts and sockets of grid circuit connected to UPS are not in good contact, resulting in poor AC power input.
2	UPS installation is complete, switch on mains switch or power switch will burn off the insurance or trip.	The three-phase input wires or three-phase output wires are connected incorrectly, such as the neutral wire and grounding wire or the live wire and grounding wire (chassis) being reversed.
3	UPS outputs 230V AC power after startup, but UPS works in bypass status.	• The connected load capacity exceeds the rated output capacity of UPS. Reduce load or use a UPS with a larger output capacity. • If the temporary bypass is caused by the load boot impact and automatically recovers, it is still normal.
4	UPS output is normal after startup, but UPS stops output immediately after the load is started.	• If the UPS is severely overloaded or there is a short circuit in the output circuit, reduce the load to an appropriate level or identify the cause of the short-circuit. Common causes include short-circuits in output adapter or input short-circuits caused by damaged equipment. • If the load is not started in the order of "large power load→small power load", UPS should be restarted. After UPS runs stably, start loads in the order of "large power load→small power load".
5	UPS works normally after startup, UPS automatically shuts down after a period of time.	In the battery power supply status, the battery undervoltage protection occurs when the battery runs out, system automatically shuts down. This phenomenon is normal. When mains recovers, system will automatically start and charge battery. Warning: If the battery stays in under-voltage status for a long time, it will influence the battery service life. After taking battery undervoltage protection, if mains cannot restore for a long time, please switch off the battery switch to protect battery, and restart UPS and fully charge the battery once mains recovers.
6	UPS works normally after startup for a long time, the buzzer keeps beeping and the touch screen displays the battery undervoltage.	Due to the low voltage of the power grid, the UPS operates in battery inversion mode, ultimately resulting in battery under-voltage protection action
7	UPS outputs normally when mains is available. UPS has no output when mains is not available.	• Battery fault or battery pack has been seriously damaged. • Charger fault. Usually, the battery cannot be charged, resulting in insufficient battery power. • Battery wire is not well connected or the contact of wire terminal is poor. • Battery switch is not switched off. • After a severe overload occurred, the UPS was not restarted, causing it to remain in a bypass output status.
8	Buzzer keep beeping, UPS switches to bypass power supply.	See the fault information on the touch screen.
9	Mains is present, but the buzzer beeps intermittently.	The mains voltage or frequency exceeds the allowable range of UPS.
10	In the mains status, UPS works normally. However, after the mains power failure, UPS works normally but the user device stops working.	Poor grounding engineering, resulting in the floating voltage between the neutral wire and grounding wire is too high.
11	Fault indicator on a power module is on.	The power module is faulty. Replace the power module.

6.5.2 Emergency Measures for Malfunctions

- Emergency measures for the system faults

When a system fault occurs, perform an inverter shutdown. If necessary, turn off the user load and disconnect the external input/output switches of the UPS to prevent further damage to the UPS. Notify engineering technicians for repair.

- Emergency measures for power module faults

When a power module fails, it will automatically isolate itself from the system, which generally does not affect the normal operation of the system, but reduces the redundancy of the power modules. In this case, set the ready switch of the faulty power module to  status, remove it from the cabinet, and notify AEC technical support to have it repaired.

⚠ CAUTION

After removing the power module, high voltage remains inside the power module and on the connector pins of its rear cover. Wait for a sufficient period (≥15 minutes) before opening the cover for repair.

07 CHAPTER 7 Removing and Discarding UPS

IN THIS CHAPTER

7.1 Removing UPS
7.2 Discarding UPS

7.1 Removing UPS

CAUTION

After the UPS is shut down for 15 minutes, use a multimeter and clamp-on ammeter to check that there is no voltage or current. Wear protective equipment, and then perform the operation on the UPS.

NOTE

Before removing UPS, power off both AC and DC.

PROCEDURE

1. Refer to section **3.7.2 UPS Connection** and follow the reverse steps to disconnect all electrical connections of the UPS.
2. If the UPS is to be used again in the future, proper storage must be ensured. Follow the storage requirements outlined in section **1.9 Storage Requirements**.

7.2 Discarding UPS

Users are responsible for properly handling UPS.

WARNING

Discard UPS in accordance with local regulations and standards to avoid property damage or personal injury.

CAUTION

Some components of the UPS may be hazardous to the environmental. Discard the UPS in compliance with the electrical waste disposal regulations at the installation site.

APPENDIX A

A Technical Specifications

IN THIS CHAPTER

A.1 UPS Technical Specifications

A.2 Component Technical Specifications

A.1 UPS Technical Specifications

A.1.1 Physical and Electrical Specifications

PHYSICAL SPECIFICATIONS

Item ⌄ Model ›		IST6-600	IST6-800	IST6-1000	IST6-1200
Wiring mode		Top wiring Bottom wiring (used together with side wiring cabinet)			
Single power source		Support single power source			
Size (Width×depth ×height) (mm)	Standard UPS	(801±2)×(1000±2)×(2000±2)		1200±2)×(1000±2)×(2000±2)	
	With side wiring cabinet	(1201±2)×(1000±2)×(2000±2)		(2000±2)×(1000±2)×(2000±2)	
	with distribution cabinet	-	(1400±2)×(1000 ±2)×(2000±2)	(1800±2)×(1000±2)×(2000±2)	
	with distribution cabinet and side wiring cabinet	-	-	(2600±2)×(1000±2)×(2000±2)	
Weight (without power modules) (kg)		434	435	662	662
Weight (without power modules, including distribution cabinet) (kg)		-	730	1048	1048
Ambient temperature (°C)		0~40			
Storage temperature (°C)		-25~55			
Relative humidity		0% RH~95%RH (non-condensing)			
Altitude (m)		0m~2000m			

SYSTEM SPECIFICATIONS

Item	Specifications
System efficiency (max.)	97.2% (General) / 98.1% (Plus)
External isolation transformer function	Isolation transformer of the same capacity at the output is available (the transformer shall be selected by the customer according to actual applications).
Backfeed protection function	Equipped (this function needs to be manually enabled. For details, see **Table 2-12 Output dry contact definition**)
Distribution system	TN-S, TN-C, TN-C-S, TT Note: It does not support the three-phase three-wire triangular grounding power supply.
Communication function	Dry contact, RS232, MODBUS, SNMP (optional)
Electromagnetic compatibility	Comply with IEC 62040-2-2016
Cooling method	Forced air cooling
Noise level (dB)	<80 (1 meter from the front of device)
Protection grade	IP20
Protection level	I
Pollution level	II

MAINS INPUT SPECIFICATIONS

Item	Specifications
Power supply system	3φ4W+PE
Rated input voltage (VAC)	380/400/415 (line voltage)
Input voltage range (VAC)	138~485 (324~485: without derating, 138~323: linear derating)
Rated input frequency (Hz)	50/60
Input frequency range (Hz)	40~70
Input PF	≥0.99
Input THDi	Full load: ≤3%
Overvoltage level	III

BYPASS INPUT SPECIFICATIONS

Item	Specifications
Power supply system	3φ4W+PE
Bypass input voltage (VAC)	304~438
Bypass synchronization tracking range (Hz)	50/60±6
Overvoltage level	III

BATTERY INPUT SPECIFICATIONS

Item		Specifications
Battery type		Lead-acid battery Li-battery (optional)
Lead-acid battery	Rated battery voltage (VDC)	480
	Battery voltage (VDC)	360~600 (30 cells to 50 cells optional, default is 40 cells)
	Number of batteries	2V battery, 180~300 cell/pack, standard number of batteries 240 cell/pack. • 180-191 cell/pack: output power derated to 0.75 • 192-215 cell/pack: output power derated to 0.8 • 216-239 cell/pack: output power derated to 0.9 • 240~300 cell/pack: Output power is not derated. Note: The standard configuration does not include a neutral wire, but a neutral wire can be optionally included. For 276–300 cells per pack, consult AEC for a custom solution.
	Cell equalized charge voltage	It can be set from 2.300V/cell to 2.470V/cell, default is 2.350V/cell.
	Cell floating charge voltage	It can be set from 2.167V/cell to 2.300V/cell, default is 2.270V/cell
Li-battery (third- party lithium battery)	Rated battery voltage (VDC)	512
	Battery voltage (VDC)	384~640
	Number of batteries	120~200 cell/pack, standard number of batteries 160 cell/pack. • 120~139cell/pack: Output power derated to 0.8. • 140~159cell/pack: Output power derated to 0.9. • 160~200cell/pack: Output power is not derated.
	Cell equalized charge voltage	It can be set from 3.40V/cell to 3.55V/cell, default is 3.50V/cell
Charge limit coefficient		Lead-acid battery: It can be set from 0.05C to 0.50C, default is 0.20C. Li-battery: It can be set from 0.05C to 1.00C, default is 0.50C.
Charge current (A)		20 (single module) *N (N is module number). The system default charge current is 20A.
Shared battery pack mode		Equipped
Battery cold start function		Equipped

OUTPUT SPECIFICATIONS

Item	Specifications
System	3φ4W+PE
Voltage (VAC)	380/400/415±1%
Frequency (Hz)	• Normal mains: the output frequency is consistent with the bypass input frequency. • Abnormal mains: the frequency will be 50±0.1 or 60±0.1
Output voltage stability accuracy	≤1%
Output voltage phase deviation	• Balanced resistive load≤1° • Unbalanced resistive load≤2°
Waveform distortion (THDv)	• Linear load≤1% • Nonlinear load≤3%
Bypass inverter transfer time (ms)	• Sync<1ms • Out of sync<15ms
Mains battery transfer time	0ms
Inverter overload capacity	• PF≥0.95 Load rate≤105%, long-term running. 105%<load rate≤110%, turn to bypass after 60 minutes. 110%<load rate≤125%, turn to bypass after 10 minutes. 125%<load rate≤150%, turn to bypass after 1 minute. Load rate>150%, turn to bypass immediately. • Non-linear load (PF=0.9) Load rate≤105%, long-term running. 105%<load rate≤110%, turn to bypass after 60 minutes. Load rate>110%, turn to bypass immediately. • Non-linear load (PF=0.8) Load rate≤105%, long-term running. Load rate>105%, turn to bypass immediately. Note: If the UPS is configured with a top air outlet kit, the above inverter overload capacity should be controlled with ambient temperature below 30 °C. At 40°C, it supports long-term full load.
Bypass overload capability	• Load rate≤135%, long-term running. • 135%<load rate≤150%, maintain 5 minutes. • 150%<load rate≤200%, maintain 1 second. • 200%<load rate≤300%, maintain 100 milliseconds. • Load rate>300%, protect immediately. Note: If the UPS is configured with a top air outlet, the ambient temperature should be controlled to not exceed 30°C.
Inter-power module equalized current accuracy	≤5%
Output DC component	-100mV~+100mV
Dynamic voltage transient range	The load varies between 0% to 100% or 100% to 0%, and its output voltage ≤5%.
Voltage transient recovery time	≤20ms
Output PF	It can be set from 0.8 to 1.0. Default value is 1.0.
Load unbalance capability	It can withstand 100% unbalanced loads.

A.1.2 Parallel Specifications

Item	Specifications
Max. paralleled UPS number (unit)	8
Parallel current imbalance	≤5%
Parallel ECO function	Equipped

A.1.3 Protection Specifications

Item	Specifications
Input overvoltage protection	Equipped
Input undervoltage protection	Equipped
Output short circuit protection	Equipped
Output overvoltage protection	Equipped
Output undervoltage protection	Equipped
Output overload protection	Equipped
Output overtemperature protection	Equipped
Battery undervoltage protection	Equipped
Communication abnormal protection	Equipped

A.1.4 Standard Specifications

Item	Specifications
Product standard	IEC 62040-3:2021
Safety standard	IEC 62040-1:2017+AMD1:2021, IEC 62477-1:2022
EMC standard	IEC 62040-2:2016
Test standard	IEC 60068-2-1, IEC 60068-2-2, IEC 60068-2-78, IEC 60068-2-27, IEC 60068-2-6, IEC 60529
Torque standard	ISO 898-7

A.2 Component Technical Specifications

A.2.1 Power Module Technical Specifications

Item ⌄ Model ›	IST6-600	IST6-800	IST6-1000	IST6-1200
Rated capacity (kVA)	100			
Size (Width×depth×height) (mm)	440×760×130 (Mounting ears and handles are not included)			
Weight (kg)	54			

A.2.2 Bypass Module Technical Specifications

Item ⌄ Model ›	IST6-600	IST6-800	IST6-1000	IST6-1200
Rated capacity (kVA)	600	800	800	1200
Size (Width×depth×height) (mm)	440×708×200			
Weight (kg)	46	65	46	46

A.2.3 System Control Box Technical Specifications

Item ⌄ Model ›	IST6-600	IST6-800	IST6-1000	IST6-1200
Size (Width×depth×height) (mm)	440×175×75 (Mounting ears are not included)			
Weight (kg)	5			

- Specifications are subject to change without prior notice

Dimensions and weights

Overall dimensions in millimetres (W × D × H) and net weights, from the technical data of this manual. Leave the clearances given in the installation chapter around the UPS.

IST6-600 / IST6-800
cabinet (tolerance ±2 mm)



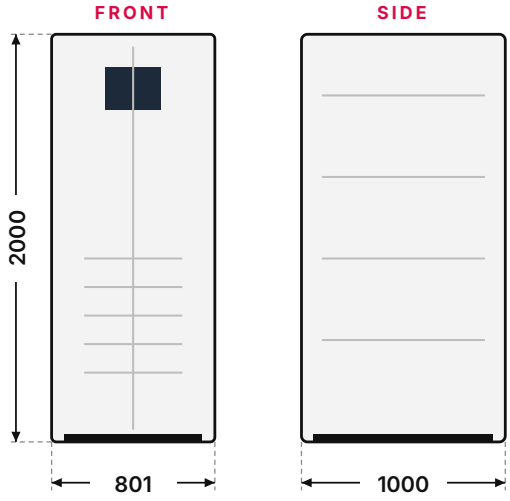

W × D × H	801 × 1000 × 2000 mm
IST6-600, without power modules	434 kg
IST6-800, without power modules	435 kg
IST6-800 with distribution cabinet (1400 mm wide)	730 kg
Power module 100 kW (each)	54 kg

IST6-1000 / IST6-1200
cabinet (tolerance ±2 mm)



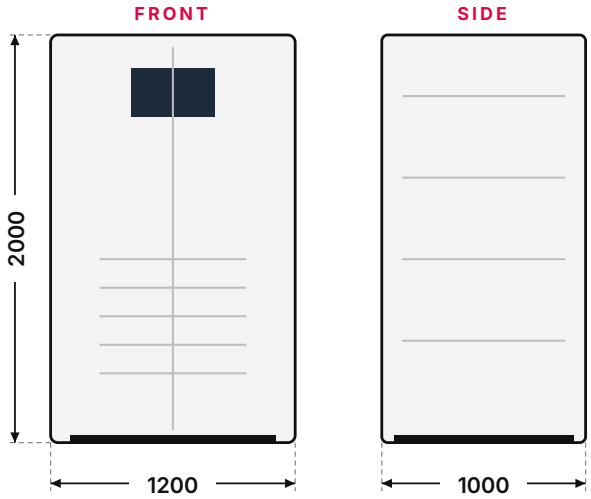

W × D × H	1200 × 1000 × 2000 mm
Without power modules	662 kg
With distribution cabinet (1800 mm wide)	1048 kg
Power module 100 kW (each)	54 kg

APPENDIX B

B Quality Assurance

If the device develops a fault during the warranty period, AEC will repair or replace it free of charge, according to AEC's warranty terms.

EVIDENCE

During the warranty period, the purchase invoice must be shown and the product label must be clearly legible; otherwise AEC may refuse the warranty.

CONDITION

- The replaced product must be returned to AEC.
- AEC must be given reasonable time to repair the faulty device.

DISCLAIMER

AEC may refuse the warranty in any of the following cases:

- Beyond the free quality assurance period.
- Damaged by transportation.
- Improper installation, transformation or use.
- Used in the harsh environment that not allowed in the user manual.
- Damage caused by installation, maintenance, modification or dismantling carried out by others than AEC or its authorised service partners.
- Damage caused by non-standard components or software, or components or software not supplied by AEC.
- Beyond the installation and use range of related national standard.
- Damage caused by abnormal nature environment.

If the fault results from one of the cases above, AEC can repair it as a paid service.

AEC continuously improves its products and manuals. If this manual differs from the product, this may be due to a version difference: the actual product applies. For any question, contact AEC.

SOFTWARE AUTHORIZATION

- It is prohibited to use any part of the hardware or software data of the product for commercial purposes.
- It is prohibited to decompile, decrypt or tamper with the software of the product.

APPENDIX C

C Acronyms and Abbreviations

Acronym	Meaning
AC	Alternating Current
BMS	Battery Management System
DC	Direct Current
DSP	Digital Signal Processor
ECO	Economy mode
EMC	Electromagnetic Compatibility
EPO	Emergency Power Off
ESD	Electrostatic Discharge
HMI	Human-Machine Interface
IEC	International Electrotechnical
IGBT	Insulated-Gate Bipolar Transistor
LED	Light-emitting Diode
NC	Normally Closed (contact)
PE	Protective Earth
PF	Power Factor
PFC	Power Factor Correction
RCD	Residual-Current Device
RMS	Root Mean Square
RS232	Recommended Standard 232
RS485	Recommended Standard 485
SCR	Silicon-Controlled Rectifier
SNMP	Simple Network Management Protocol
SPD	Surge Protective Device
STS	Static Transfer Switch
THDi	Total Harmonic Current Distortion
THDv	Total Harmonic Voltage Distortion
UPS	Uninterruptible Power Supply
VRLA	Valve-Regulated Lead-Acid (battery)

More on the AEC partner portal

PARTNER PORTAL

portal.emea.aecups.com

- 3D models of every UPS
- Diagrams and drawings
- Video tutorials
- Manuals and catalogues, always up to date

WHATSAPP SUPPORT

+39 393 080 5211

Technical support 24/7. Scan the code to write to AEC service.

AEC International Srl
Via Nerviano 55 · 20045 Lainate (MI) · Italy

Sales +39 02 9415 8991 · info@aecups.com
Service +39 393 080 5211 · service@aecups.com