AEC
Technology Behind Power

USER MANUAL

IST7

10–40 kVA

Online double-conversion UPS, three-phase



English

Read this manual before installing and using the UPS.
Keep it for future reference.

AEC-UM-IST7-10-40-EN
Rev. 01 · 10/2026

OVERVIEW

Contents

	About this manual	**3**
1	**Safety Description**	**4**
1.1	Safety Notices	4
1.2	Operation and Maintenance Requirements	6
1.3	Environment Requirements	6
2	**Overview**	**7**
2.1	Product Intro	7
2.2	Work Principle	18
3	**Installation**	**23**
3.1	Announcements	23
3.2	Installation Preparation	23
3.3	Transport and Unpacking	27
3.4	Mechanical Installation	29
3.5	Electrical Connection	32
4	**Touch Screen Operation**	**47**
4.1	Menu Hierarchy	47
4.2	Main Page	49
4.3	Login Page	55
4.4	Information Management Page	55
4.5	Setting Management Page	60
4.6	Current Fault Page	73
4.7	Buzzer Control	74
4.8	ON/OFF Operation	75
5	**Use and Operation**	**76**
5.1	Check Before Startup	76
5.2	Startup Operation	76
5.3	Shutdown Operation	76
5.4	Parallel System Operation	77
5.5	Periodic Preventative Maintenance	78
5.6	Battery Maintenance	78
5.7	Troubleshooting	79
6	**Package, Transportation and Storage**	**82**
6.1	Package	82
6.2	Transportation	82
6.3	Storage	82
A	**Technical Specifications**	**83**
	Dimensions and weights	84
B	**Acronyms and Abbreviations**	**85**

BEFORE YOU START

About this manual

This manual describes the AEC IST7 10–40 kVA UPS: online double-conversion UPS, three-phase. It covers the features, controls, installation, operation, maintenance, transport and storage. Read it before you start, and keep it with the UPS for future reference.



10 – 20 kVA



30 – 40 kVA

kVA = kW output power factor 1 (0.9 settable)	**96 %** system efficiency, up to
≥ 0.99 input power factor	**< 1 ms** inverter ↔ bypass transfer, synchronised

MODELS COVERED

- IST7 10 kVA, 15 kVA and 20 kVA, three-phase tower
- IST7 30 kVA and 40 kVA, three-phase tower
- Versions without batteries and with internal batteries (S)

WHO THIS MANUAL IS FOR

Installers, electricians, IT and facility staff who install, operate and maintain the UPS. Electrical installation and any work inside the UPS must be done by qualified personnel, in line with IEC 60364 and the local wiring rules.

> **NOTE**
> Model suffix: none = without internal battery or transformer; S = with internal battery; T = with internal transformer.

Safety messages

Safety messages in this manual follow ISO 3864 / ANSI Z535. The signal word tells how serious the hazard is.

DANGER	A hazardous situation which, if not avoided, **will** result in death or serious injury.
WARNING	A hazardous situation which, if not avoided, **could** result in death or serious injury.
CAUTION	A hazardous situation which, if not avoided, could result in minor or moderate injury, or in damage to the equipment.
NOTE	Additional information that stresses or completes the text.
TIP	A hint that helps you solve a problem or save time.

Numbers in red circles on a picture are explained in the table or list that follows it. References in red, such as Figure 2-1 or Table 3-1, are links in the PDF. Figures are for reference only: the actual product may differ in detail.

Up and running

The short version: each step points to the full instructions. Read the safety chapter first.

1. **Read the safety instructions.** See Section 1.1, Safety Notices.
2. **Unpack and check the delivery.** See Section 3.3, Transport and Unpacking.
3. **Choose the place and prepare the cables and breakers.** See Section 3.2, Installation Preparation.
4. **Install and connect the UPS.** See Section 3.5, Electrical Connection.
5. **Start the UPS.** See Section 5.2, Startup Operation.
6. **Check the display and the settings.** See Section 4.5, Setting Management Page.
7. **Look after the UPS.** See Section 5.5, Periodic Preventative Maintenance.

CHAPTER 1

01 Safety Description

This chapter describes the safety notices. Before performing any work on the UPS, read this user manual carefully to avoid personal injury and damage to the device caused by improper operation.

IN THIS CHAPTER

1.1 Safety Notices
1.2 Operation and Maintenance Requirements
1.3 Environment Requirements

AT A GLANCE **The safety rules of this chapter**



High voltage inside, also after the UPS is switched off: wait before opening it.



Installation, opening and service by qualified personnel only.



Batteries: never short-circuit them, keep them from fire, use only the specified type.



Electrostatic-sensitive boards: wear an earthed wrist strap.



Earth the UPS before connecting anything else.



No liquids or foreign objects inside the UPS.



In case of fire use a dry-powder extinguisher, never water or liquid.



Keep the air inlets and outlets free; respect the clearances.

1.1 Safety Notices

This section describes the safety notices that must be observed during installation, use, maintenance and all related operations.

CAUTION

Before operating the UPS, read the safety notices and operating instructions in this section carefully to avoid accidents.

The DANGER, WARNING and CAUTION notices in this manual do not cover all the safety rules that must be observed; they only supplement the general safety rules for operation.

NOTE

AEC accepts no liability for consequences of violating general safety requirements or the safety standards for design, manufacture and use.

1.1.1 Safety Instructions

⚠ CAUTION

High temperatures and high voltages are present inside the UPS. During use, strictly comply with all warnings and operating instructions on the UPS and in this user manual.

⚠ CAUTION

This UPS is an EMC category C3 product (IEC 62040-2), intended for commercial and industrial use. In a residential environment it may cause radio interference; in that case the user may have to take additional measures.

- No liquid or other objects are allowed to enter the UPS.
- The UPS must be properly earthed.
- In case of fire, use a dry-powder extinguisher. Do not use water or other liquid extinguishers: risk of electric shock.

1.1.2 Battery Safety Notices

⚠ CAUTION

The following instructions are for models with built-in batteries only.

Use only batteries of the type specified by AEC; other batteries can damage the UPS.

- Batteries may be replaced only by authorised service personnel. Do not wear conductive objects such as watches, bracelets or rings while working. Wear rubber shoes and gloves and use tools with insulated handles.
- Do not place tools or other conductive objects on the batteries.
- Never short-circuit the battery terminals or connect them with reversed polarity: risk of fire and electric shock.
- Before connecting or disconnecting battery terminals, open the battery breaker so that the charger is disconnected.
- All batteries must be of the same type, model and brand.
- Keep the batteries away from open flames and from electrical equipment that may produce sparks, to avoid personal injury.
- Do not open or damage the batteries: the electrolyte contains strong acid, harmful to skin and eyes. In case of contact, rinse immediately with plenty of water and seek medical attention.
- Dispose of used batteries in accordance with local regulations.

1.1.3 Anti-Static Protection

⚠ CAUTION

Static electricity from the human body can damage electrostatic-sensitive components on the PCBs. Before touching such components, wear an anti-static wrist strap and connect its other end securely to earth.

1.2 Operation and Maintenance Requirements

⚠ CAUTION

Only authorised service personnel may open the UPS. Opening it otherwise can cause electric shock and voids the warranty for any resulting fault.

- Before the UPS is moved, rewired or serviced, disconnect all electrical connections (AC power, battery, etc.) to isolate all power inputs. After disconnecting all power sources, wait at least 10 minutes before working on the UPS. Until then, the output and internal parts may still be live and can cause electric shock.
- When removing a fan, do not put fingers or tools into the rotating fan, to avoid damage to the device or personal injury.

1.3 Environment Requirements

⚠ DANGER

Do not install the UPS where flammable or explosive gases or smoke are present, and do not operate it in such an environment.

- Do not use the UPS in direct sunlight, in the rain or in damp places.
- The operating temperature of the UPS is -5 °C to 40 °C, relative humidity 0 % to 95 %, non-condensing (recommended operating temperature 20 °C to 25 °C, humidity about 50 %).
- Place the UPS on a flat, vibration-free floor with a gradient of less than 5°. Keep the area around the UPS well ventilated. The clearance between the rear or sides of the UPS and adjacent equipment or walls must be at least 300 mm (300 mm to 500 mm recommended). Poor ventilation raises the temperature inside the UPS, which shortens the service life of its components and of the UPS itself.
- The UPS is rated for operation up to 2000 m above sea level. Above 2000 m, derate the output power according to IEC 62040-3:2011.

CHAPTER 2

02 Overview

This chapter describes the UPS model designations, features, structure, operating principle, etc.

IN THIS CHAPTER

2.1 Product Intro
2.2 Work Principle

THE UPS AT A GLANCE



10 – 20 kVA: touch screen



Rear: breakers, terminals, communication



30 – 40 kVA

2.1 Product Intro

The 10K-40K series UPS is a high-frequency, online double-conversion UPS with digital control. It provides reliable power protection for file servers, enterprise servers, central servers, microcomputers, concentrators, telecom systems, data centres and other equipment that needs high-quality power, and is widely used in key sectors such as postal services, finance, networks, stock exchanges and railways.

> **NOTE**
>
> 1. The 10K/15K/20K UPS can be set to three-phase input/three-phase output, three-phase input/single-phase output or single-phase input/single-phase output mode. The 30K/40K UPS can be set to three-phase input/three-phase output or three-phase input/single-phase output mode. 2. Three-phase input three-phase output (three in three out) is 33 mode UPS, three-phase input single-phase output (three in one out) is 31 mode UPS, single-phase input single-phase output (one in one out) is 11 mode UPS. 3. The UPS mode is changed through the wiring, the connector jumpers supplied as accessories, the screen setting and the mode connector (30K-40K only); for details see 3.5.1 UPS Wiring Operation.

2.1.1 Features

COMPLETELY DIGITALIZED SMART CONTROL

The UPS supports several input/output modes: 33, 31 and 11 (11 mode on 10K-20K only). It detects the grid frequency (50 Hz/60 Hz) and adapts to it automatically. The output voltage can be set to 220 V, 230 V or 240 V (default 230 V) for greater flexibility.

ENERGY CONSERVATION AND HIGH EFFICIENCY

Three-level inverter and PFC control technology give a clean output voltage waveform, an overall efficiency of up to 96 % and an input power factor of 0.99 or higher, which makes better use of electrical energy and reduces the load on the grid.

SMART FAN SPEED CONTROL

The fan speed is adjusted automatically to the load, which prolongs fan life and reduces noise.

ECO ENERGY CONSERVATION MODE DESIGN

The UPS has an ECO energy-saving mode. In this mode, when the grid is good, the load is supplied preferentially from the bypass and the efficiency reaches 99 %. When the bypass voltage or frequency goes out of the normal range and no longer meets the load requirements, the UPS switches to inverter output. This saves energy while keeping the power supply reliable.

LOW MAINS INPUT VOLTAGE

Independent fast-detection technology: at low load the battery does not discharge as long as the mains voltage stays above 80 V (the mains low limit). In mains mode all output power is taken from the grid, so the battery stays fully charged, the number of discharges is reduced and battery life is prolonged.

2.1.2 Appearance

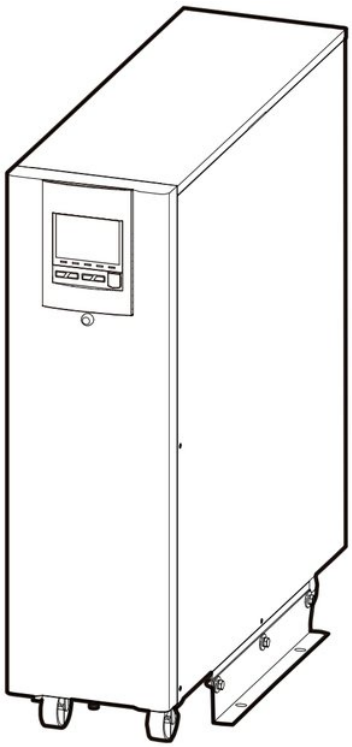

FIGURE 2-1 Appearance of 10K/15K/20K UPS

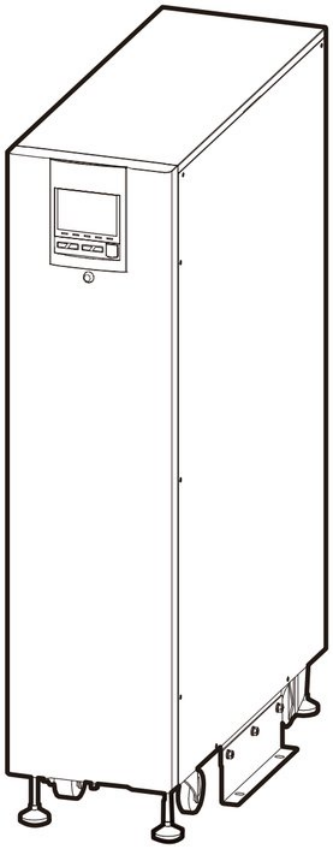

FIGURE 2-2 Appearance of 30K/40K UPS

TOUCH SCREEN OPERATION PANEL

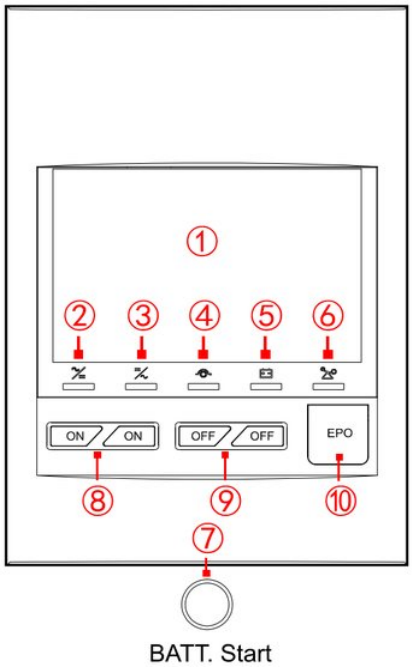

FIGURE 2-3 Touch screen operation panel

TABLE 2-1 Illustration for touch screen operation panel

No.	Name	Illustration
Illustration for operation panel		
	Touch screen display	Shows the working status and system setting.
	AC/DC indicator	On (green): rectifier works normally; On (red): rectifier abnormal.
	DC/AC indicator	On (green): inverter works normally; On (red): inverter abnormal.
	BYP. indicator	On (green): bypass output; On (red): bypass abnormal.
	BATT. LOW indicator	On (red): battery voltage low.
	OVERLOAD indicator	On (red): output overload or overload protection.
Buttons operation instructions		
	BATT. Start button	Press the **BATT. Start** button for 7 s to power up the auxiliary supply.
	Pair of **ON** buttons	Press both **ON** buttons together until a beep is heard: the system powers on.
	Pair of **OFF** buttons	Press both **OFF** buttons together for 3 s: the system powers off.
	EPO emergency power off button	Press the button to switch off the UPS output immediately.

BATTERY START

The battery start operation: first press and hold the **BATT. Start** button for 7 seconds, then press both **ON** buttons together until a beep is heard to start the UPS.

> **NOTE**
> Battery start is used only to start the UPS from the battery when no mains power is available.

REAR PANEL

- 10K/15K/20K UPS

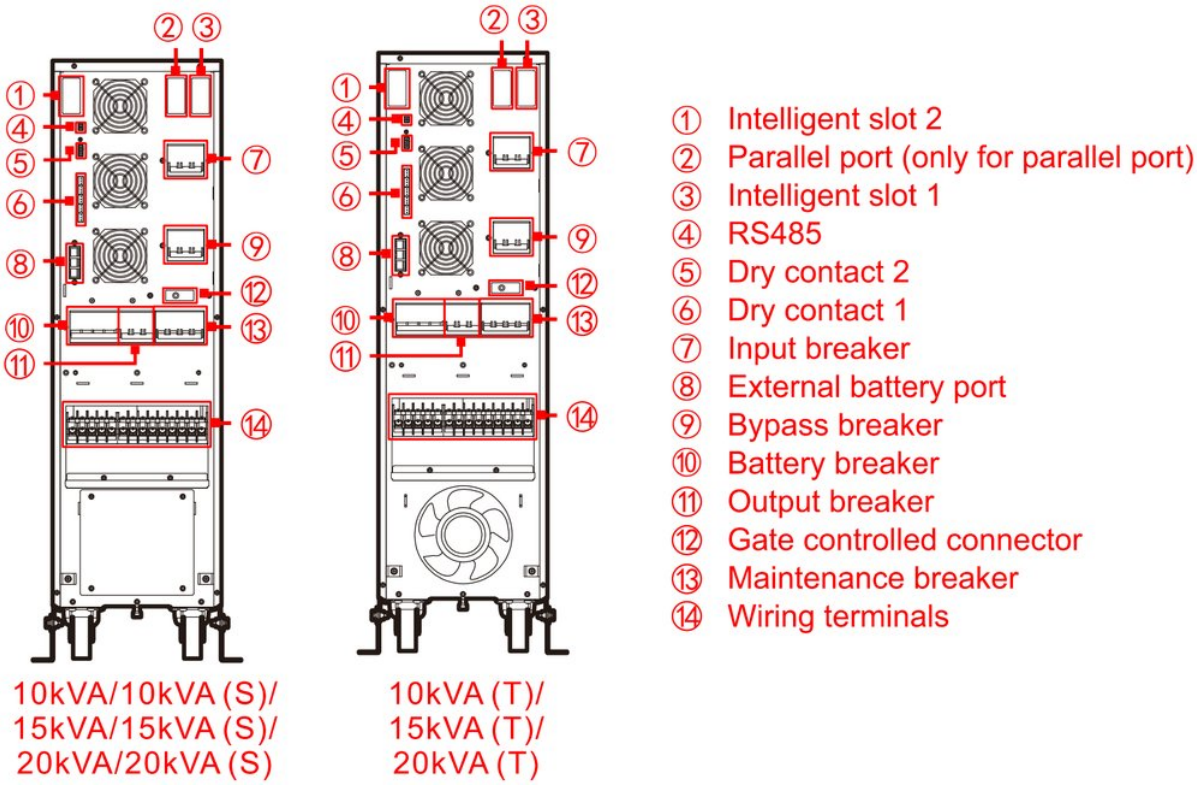

FIGURE 2-4 Structure of 10K/15K/20K UPS rear panel

- 30K UPS

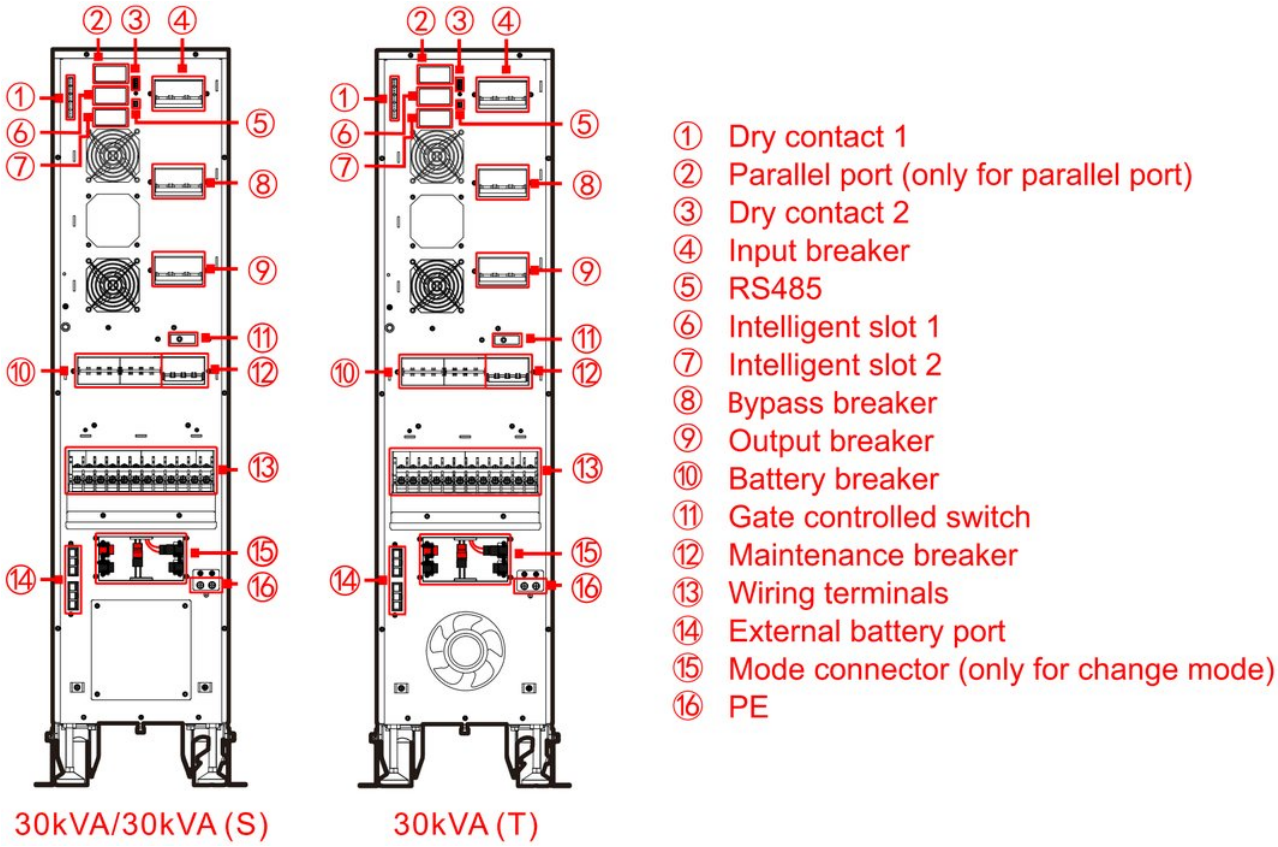

FIGURE 2-5 Structure of 30K UPS rear panel

- 40K UPS

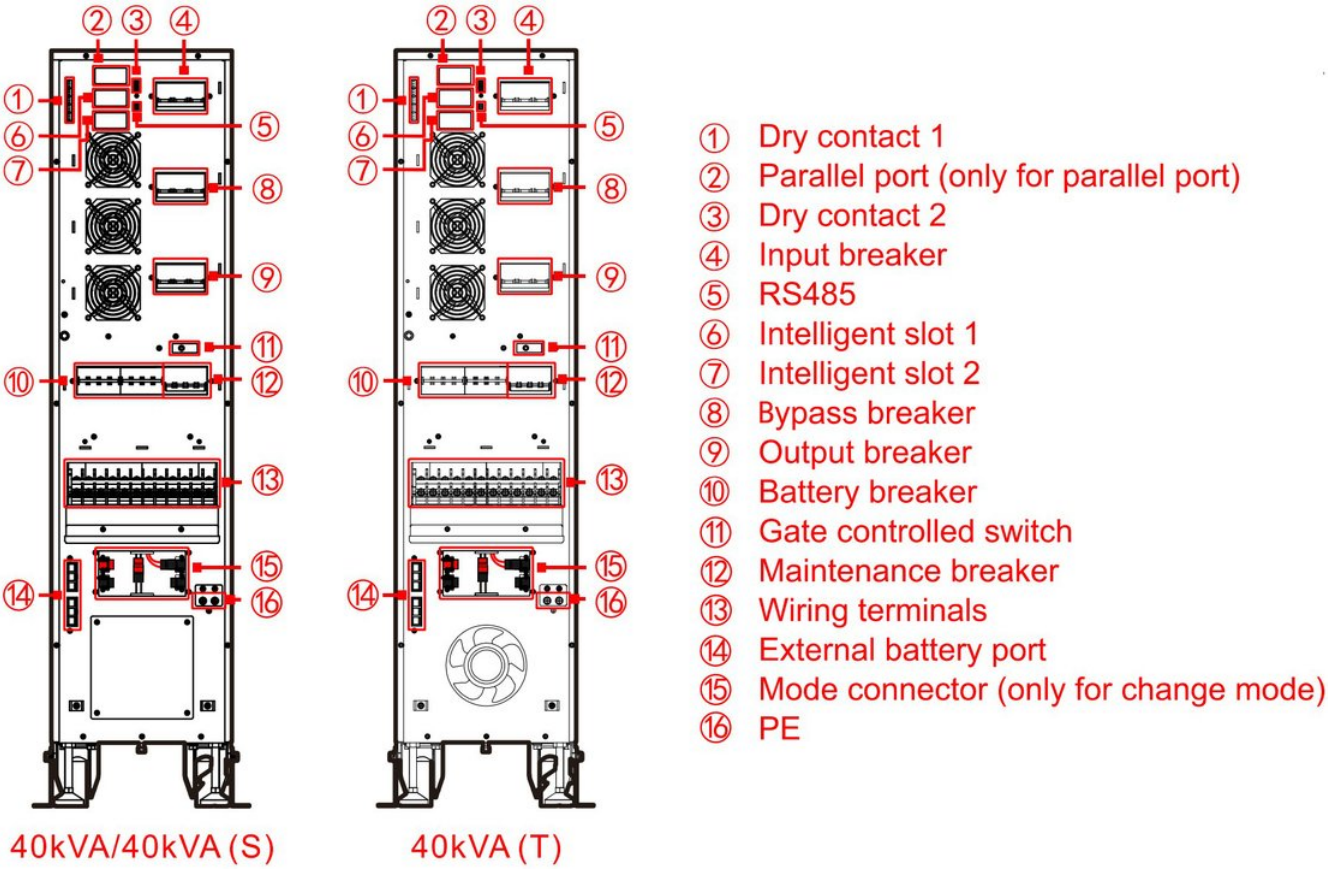

FIGURE 2-6 Structure of 40K UPS rear panel

NOTE

The wiring terminals differ slightly between 33, 31 and 11 mode. For the terminals of each mode, see 3.5.1 UPS Wiring Operation.

CAUTION

1.
2. The cover interlock switch opens automatically when the maintenance breaker cover plate is removed and closes again when the cover plate is refitted.
3. Switching to maintenance bypass: first remove the maintenance breaker cover plate; the interlock switch for maintenance-bypass detection opens automatically and the UPS switches off the inverter and transfers to bypass. Then switch on the maintenance bypass breaker and switch off the input, bypass and output breakers. The load is now supplied through the maintenance bypass and the UPS is isolated from its input and output, so its cables can be disconnected for maintenance. The maintenance bypass circuit remains live.
4. Returning from maintenance bypass to inverter mode: switch on the input, bypass and output breakers in turn. When the UPS internal supply is normal and the touch screen shows the bypass output voltage, switch off the maintenance bypass breaker. Refit the maintenance bypass breaker cover plate. Finally, press both ON buttons on the UPS panel to start the inverter.

2.1.3 Communication

The 10K-40K series UPS supports the following communication methods: RS485, Parallel Kit-T(2m) NT-PA, communication dry contact, Dry-contact Kit(Y5) NT-RS485Y5, Protocol Transfer Kit NT-MODBUS and SNMP card.

TABLE 2-2 Communication method correspondence with hardware port

Communication method	Communication port
RS485	RS485
Dry contact	Dry contact 1: output dry contact; Dry contact 2: input dry contact (EPO+IN. 1)

TABLE 2-3 Communication method correspondence with hardware port (optional)

Communication method	Sketch map	Communication port
Parallel Kit-T (2m) NT-PA (optional)	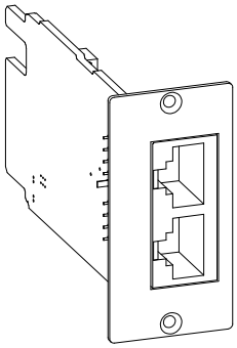	Parallel port
Dry-contact Kit (Y5) NT-RS485Y5 (optional)	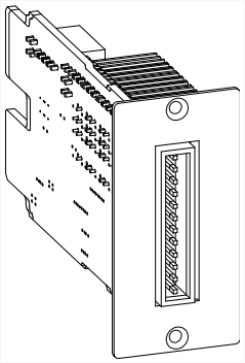	Slot 2 (optional)
Protocol Transfer Kit NT-MODBUS (optional)	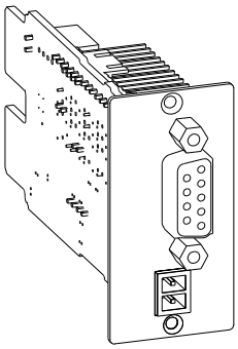	Slot 1/Slot 2 (optional)

Communication method tch	map	Communication port
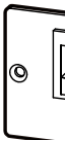 SNMP card (optional)	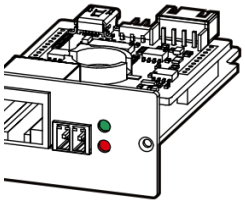	

RS485

The UPS communicates with a PC through its RS485 serial port. The pin assignment between the UPS and PC RS485 ports is shown in Table 2-4.

TABLE 2-4 Pin assignment of the RS485 port between UPS and PC

RS485 port of UPS	RS485 port of PC
A	A (+)
B	B (-)

> **NOTE**
> The standard RS485 port on the rear panel cannot be used when slot 2 is occupied.

DRY CONTACT

The dry contacts can be used for control signals or to transmit alarms. Their functions are set on the touch screen.

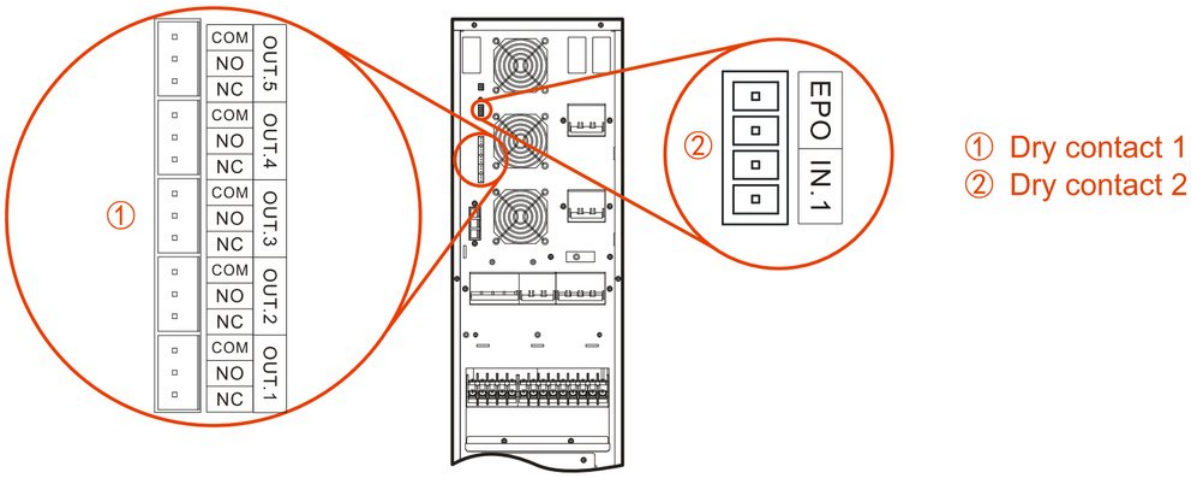

FIGURE 2-7 Dry contact position of 10K/15K/20K UPS

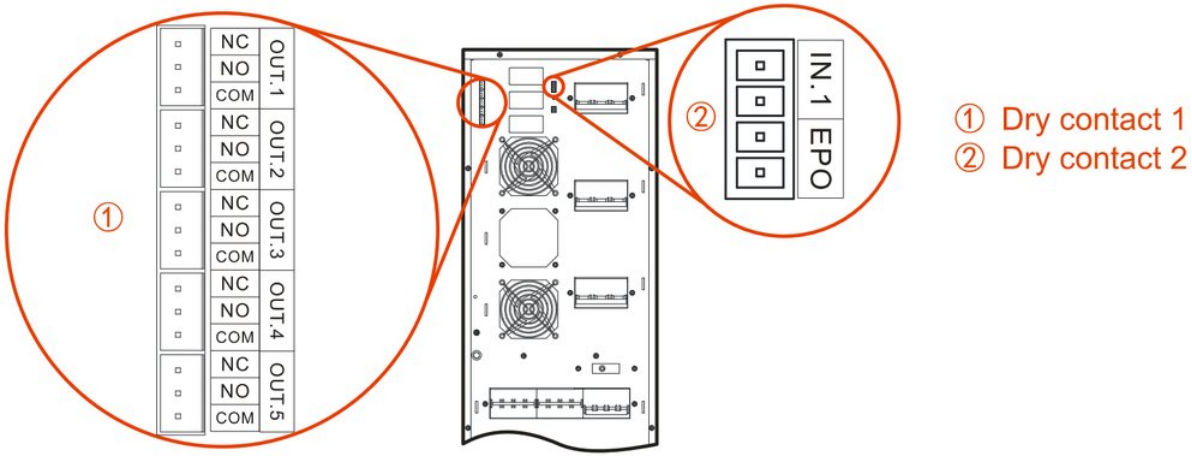

FIGURE 2-8 Dry contact position of 30K/40K UPS

> **NOTE**
> The dry contacts are in the same position on the 30K and 40K UPS; the figure above shows the 30 kVA model.

CAUTION

Relay dry contact rating: 277 Vac / 30 Vdc / 10 A; relay coil voltage 12 V.

TABLE 2-5 Dry contact functions illustration

No.	Terminal marking		Function illustration	Remarks
Dry contact 1	OUT.1	NC NO COM	When the signal is active, NO closes to COM and NC opens. The signal is settable; see the note below. Default is mains abnormal.	NC: normally closed; NO: normally open; COM: common port.
	OUT.2	NC NO COM	When the signal is active, NO closes to COM and NC opens. The signal is settable; see the note below. Default is bypass abnormal.	
	OUT.3	NC NO COM	When the signal is active, NO closes to COM and NC opens. The signal is settable; see the note below. Default is battery abnormal.	
	OUT.4	NC	When the signal is active, NO closes to COM and	
		NO	NC opens. The signal is settable; see the note below. Default is output abnormal.	
		COM		
	OUT.5	NC	When the signal is active, NO closes to COM and NC opens. The signal is settable; see the note below. Default is overload alarm.	
		NO		
		COM		
Dry contact 2	EPO		The signal is active when the 2P terminal block is open. EPO signal; not settable.	-
	IN. 1		The trigger level is settable (NC/NO); by default the signal is active when shorted. The signal is settable; see the note below. Default is charge disabled.	-

NOTE

The settable functions of the input and output dry contacts are described in Table 2-6 and Table 2-7.

CAUTION

1. The EPO input must be closed (shorted) for the UPS to operate.
2. If the EPO input opens, the UPS switches off both inverter and bypass output and the screen shows an EPO fault. The fault clears once the UPS is fully off and the EPO input is closed again.

TABLE 2-6 Settable functions of the input dry contact

NO.	Item	Illustration
1	Charge disabled	The charge disabled signal of battery: the UPS will alarm and turn off the battery charge when receiving this signal. The trigger level of signal is settable.
2	External MBB on	The breaker on signal of external maintenance bypass: the UPS raises an alarm, switches off the inverter output and transfers to bypass output when receiving this signal. The trigger level of signal is settable.
3	External BB status	The breaker disconnected signal of external battery: the UPS raises an alarm and reports a fault when receiving this signal. The trigger level of signal is settable.
4	UPS remote ON/OFF	The remote ON/OFF signal of UPS: the UPS switches on when receiving this signal. The trigger level of signal is settable.
5	Batt. ground fault	The fault signal of battery ground: the UPS raises an alarm and reports a fault when receiving this signal. The trigger level of signal is settable.
6	Discharge disabled	The discharge disabled signal of battery: the UPS raises an alarm and prevents battery discharge when receiving this signal. The trigger level of signal is settable.

TABLE 2-7 Settable functions of the output dry contacts

NO.	Item	Illustration
1	Mains abnormal	When mains grid is abnormal, the signal is valid and triggers action of dry contact.
2	Bypass abnormal	When bypass is abnormal, the signal is valid and triggers action of dry contact.
3	Battery abnormal	When battery is abnormal, for example: battery low-voltage, battery over-voltage, battery over-temperature and battery disconnected, the signal is valid and triggers action of dry contact.
4	Output abnormal	When output is abnormal, the signal is valid and triggers action of dry contact.
5	Overload abnormal	When bypass or inverter of UPS is overloaded, the signal is valid and triggers action of dry contact.
6	General abnormal	When the UPS is alarming for fault, the signal is valid and triggers action of dry contact.
7	Normal operation	When the UPS is in the normal operation, the signal is valid and triggers action of dry contact.
8	Battery operation	When the UPS is in the battery operation, the signal is valid and triggers action of dry contact.
9	Bypass operation	When the UPS is in the bypass operation, the signal is valid and triggers action of dry contact.
10	UPS ON/OFF status	When the UPS is in on status, the signal is valid and triggers action of dry contact.
11	Battery low	When battery is low voltage, the signal is valid and triggers action of dry contact.
12	ECO mode	When the UPS output mode is ECO, the signal is valid and triggers action of dry contact.
13	Fan fault	When fan is abnormal, the signal is valid and triggers action of dry contact.

OPTIONAL COMMUNICATION

- Parallel port

Parallel Kit-T(2m) NT-PA (optional): Built-in card for CAN communication between the units when a single UPS is upgraded to a parallel system. The standard UPS is a single unit, so parallel operation requires the Parallel Kit-T(2m) NT-PA. Install it in the parallel port with the UPS switched off. Then power up the UPS and set it to parallel mode on the screen. For details, see the installation guide of the Parallel Kit-T(2m) NT-PA; for the screen settings, see 4.5.7 Device Configuration Page.

- Intelligent slot 1/Intelligent slot 2 1. Dry-contact Kit(Y5) NT-RS485Y5 (optional): Built-in card. Three output dry contacts: mains status, battery status and inverter status (configurable as bypass output status). Two input dry contacts: battery temperature sampling status (temperature compensation), battery breaker status (configurable as remote ON/OFF status).

2. Protocol Transfer Kit (optional): Built-in card. One RS485 channel is reserved for

lithium-battery communication (2P green terminal block); the other channel provides RS485 or RS232 on the DB9 connector (only one of the two can be used at a time).

3. SNMP card (optional): Built-in card; the protocol is configured through its web page, so

that the card can be used with different models and communication protocols. Click "**Management>Device management**>**Network adapter**>**Power**>**UPS**" to open the UPS list page, then click "Edit" to open the "Device management parameters" page and set Communication protocol to WRWF-1201-04_3I3O. Click "**Setting**>**Serial port setting**" to open the serial port list page and set: Interface standard RS232, Baud rate 9600, Data bit 8, Stop bit 1, Verification method No check. Communication works only after these settings have been made.

> **NOTE**
> For details, see the installation guide of the optional communication card.

2.1.4 Accessories

Each UPS is supplied with three 200 mm short-circuit wires for linking the mains input to the bypass input. Their position is shown in 3.5.1 UPS Wiring Operation.

When an external battery is used, an optional extension battery wiring assembly is available to connect it to the UPS. Its position is shown in 3.5.2 Wiring Between UPS and External Battery.

The 10K/15K/20K UPS has two types of optional connector jumper (1# and 2#), as shown in Table 2-8. the 30K/40K UPS has two types (3# and 4#), as shown in Table 2-9. Fit the connector jumpers to the wiring terminals as required. Their position for each mode is shown in 3.5.1 UPS Wiring Operation.

10K/15K/20K UPS

TABLE 2-8 Accessories

Name	Illustration	Sketch map
Short circuit wire of mains- and-bypass	The length is 200mm	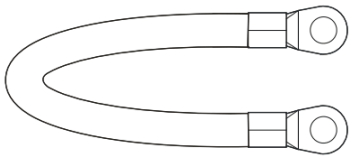
10~20K extension battery wiring assembly (optional)	1m or 3m of the wiring length for selection (optional)	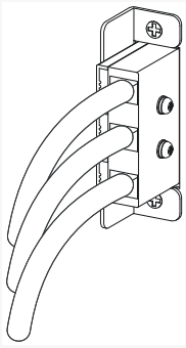
1# connector jumper	2PIN connector jumper (optional)	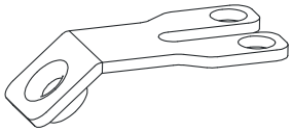
2# connector jumper	3PIN connector jumper (optional)	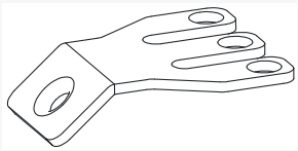

30KVA/40KVA

TABLE 2-9 Accessories

Name	Illustration	Sketch map
Short circuit wire of mains- and-bypass	The length is 200mm	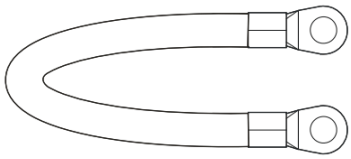
30~40K extension battery wiring assembly (optional)	1m or 3m of the wiring length for selection (optional)	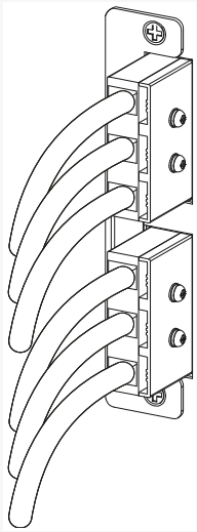
3# connector jumper	2PIN connector jumper (optional)	
4# connector jumper	3PIN connector jumper (optional)	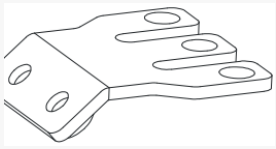

2.2 Work Principle

2.2.1 Work Principle Diagram

The operating principle of the UPS is shown in Figure 2-9.

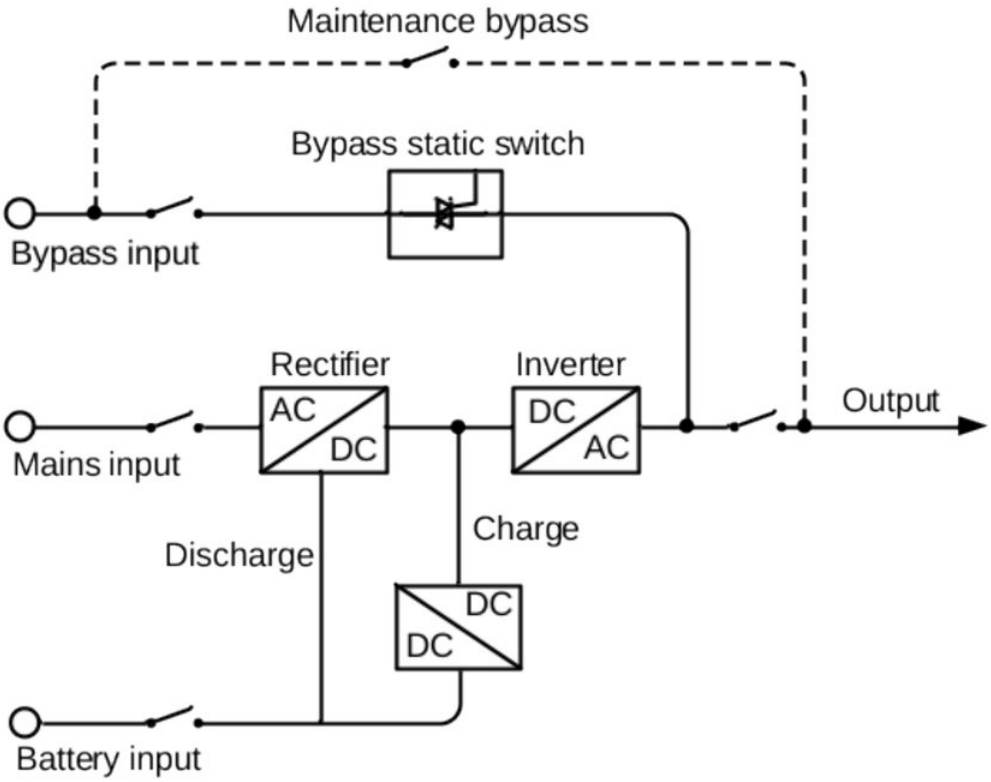

FIGURE 2-9 Work principle diagram

The 10K-40K series UPS consists of functional modules such as rectifier/PFC, inverter, charger and bypass static switch. Its inputs are mains, bypass and battery; its outputs are inverter output, bypass output and maintenance bypass output.

When the mains is normal, the rectifier starts and the charger charges the battery. While the UPS is off, the output is supplied from the bypass if the bypass is normal. When the UPS is switched on, the rectifier/PFC converts the mains to the DC bus voltage, the inverter produces a pure sine-wave AC output, and the load is transferred from bypass output to inverter output (if equipped).

When the mains fails, the rectifier/PFC boosts the battery voltage to the DC bus voltage and the inverter supplies pure sine-wave AC power to the load. When the mains returns to normal, the UPS returns automatically from battery mode to mains mode.

2.2.2 Work Mode

HOW IT WORKS **Operating modes at a glance**

Normal (online) mode

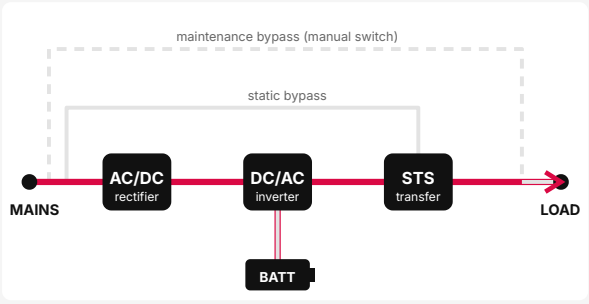

Mains present: the rectifier and the inverter supply the load with regulated power; the battery is kept charged.

Battery mode

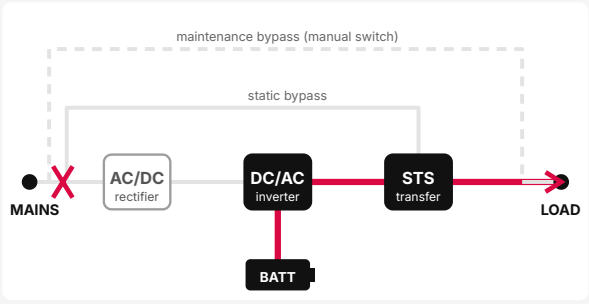

Mains outside its limits or missing: the battery feeds the inverter, with no break for the load.

Bypass mode

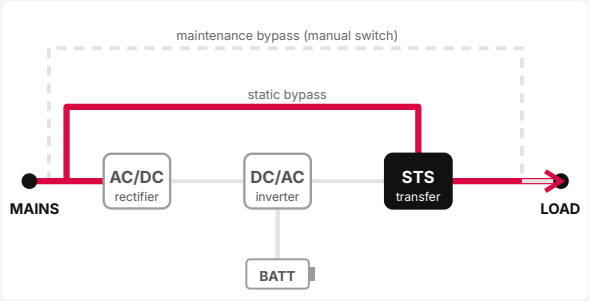

Overload, fault or inverter off: the load is supplied from the mains through the static bypass.

ECO mode

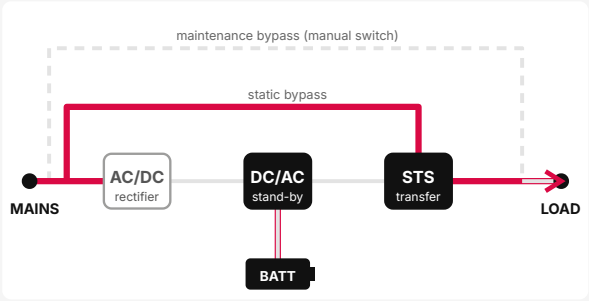

Mains inside the ECO window: the load runs on the bypass for the highest efficiency; the inverter takes over if the mains goes out of range.

Maintenance bypass

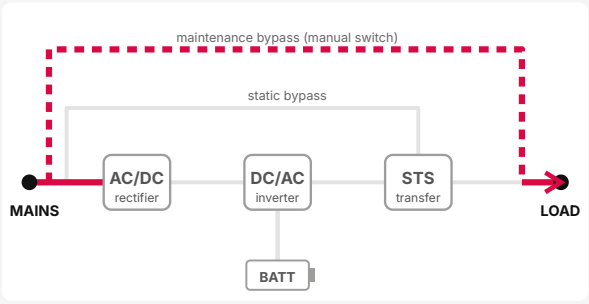

For service: the load is fed from the mains by the manual switch and the UPS can be switched off. Hazardous voltage stays on the terminals.

power flow working idle

The UPS has five operating modes: normal mains power supply mode, battery inverter mode, bypass power supply mode, ECO power supply mode and maintenance bypass power supply mode.

NORMAL MAINS POWER SUPPLY MODE

When the mains is normal, the UPS runs in mains inverter mode and charges the battery at the same time, as shown in Figure 2-10.

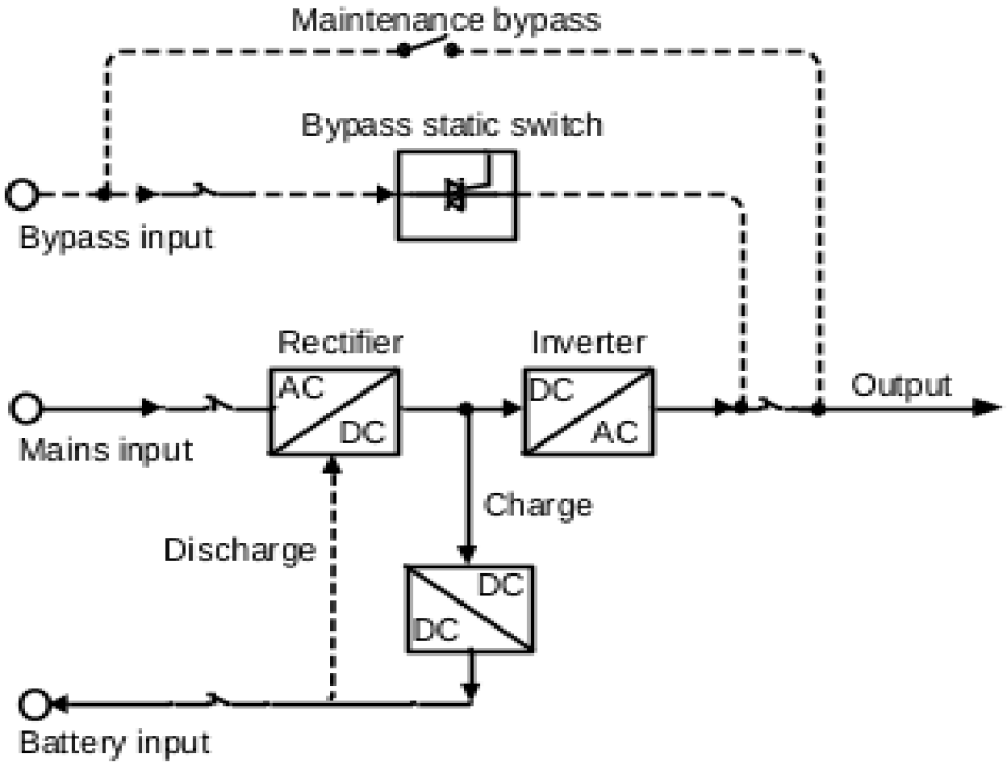

FIGURE 2-10 Normal mains power supply mode (the solid line stands for the energy flow direction)

BATTERY INVERTER MODE

When the mains fails, the rectifier switches immediately to the battery input and boosts the battery voltage to maintain the DC bus, so that the inverter output continues without interruption, as shown in Figure 2-11.

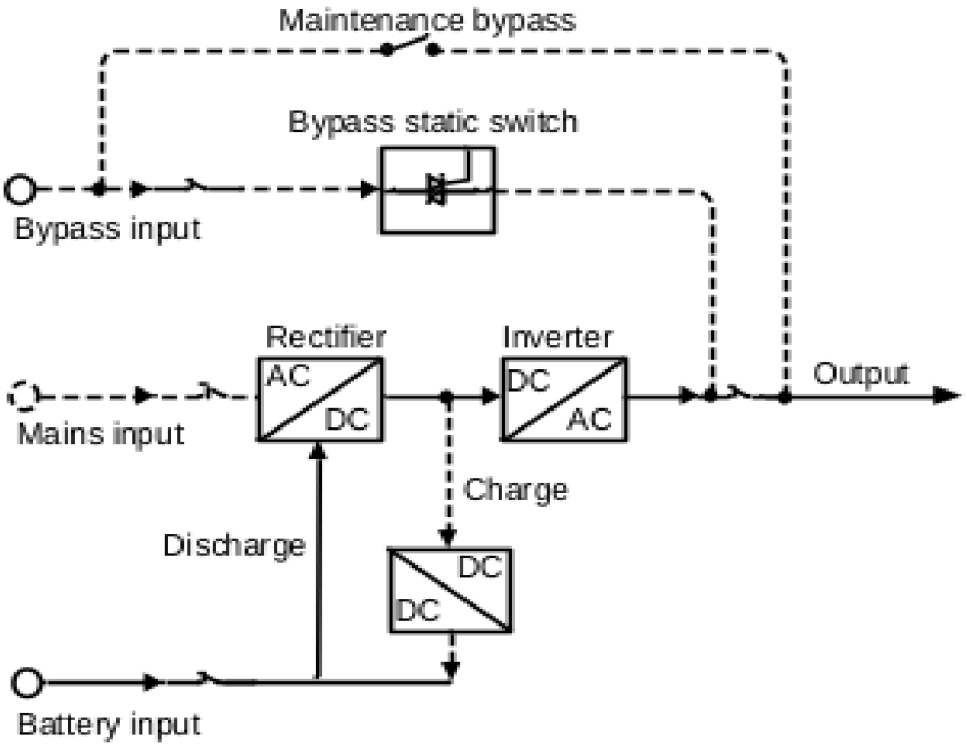

FIGURE 2-11 Battery inverter mode (the solid line stands for the energy flow direction)

If the mains returns to normal before the battery stops discharging, the rectifier switches back to the mains input automatically and charges the battery again: the UPS returns to normal mains power supply mode. If the mains does not return and the battery runs down, the UPS gives an audible and visual alarm and stops at the battery low-voltage point; the buzzer then gives a long beep and the load loses power. If the mains is still completely absent, the UPS shuts down completely about 1 min later to prevent deep discharge and protect the service life of the battery. When the mains returns, the UPS starts automatically and returns to normal mains power supply mode.

BYPASS POWER SUPPLY MODE

When the bypass voltage is normal, the UPS supplies the load from the bypass while it is off, or when a fault occurs while it is on (such as inverter output overload, over-current surge or IGBT over-temperature). When the UPS is on and the fault has cleared, it returns to inverter output. If the same fault occurs more than 5 times in a short time, the UPS stays on bypass until it is switched off manually or loses power; remove the fault and restart the UPS to resume normal operation.

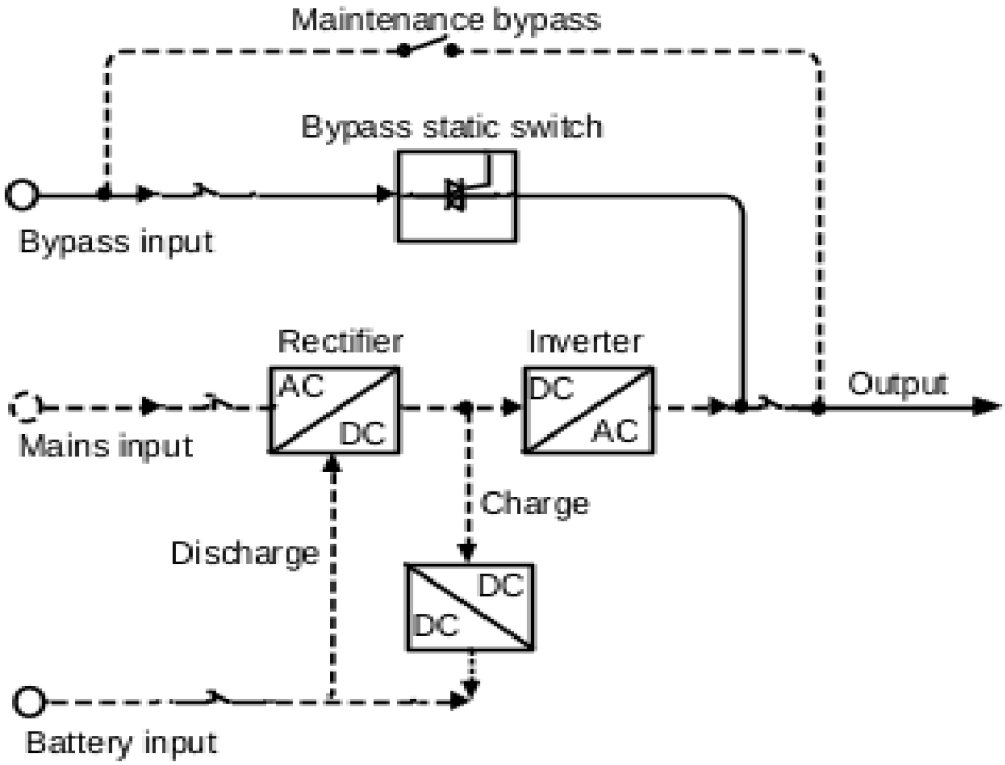

FIGURE 2-12 Bypass power supply mode (the solid line stands for the energy flow direction)

ECO POWER SUPPLY MODE (SINGLE UPS ONLY)

In ECO mode the load is supplied preferentially from the bypass while the bypass voltage is normal; when the bypass voltage is abnormal, the load is transferred to the inverter. ECO mode is an economy mode: for loads that do not need fully conditioned power, it can be selected to reduce energy consumption. In ECO mode the UPS efficiency reaches up to 99 %.

MAINTENANCE BYPASS POWER SUPPLY MODE

When the UPS needs maintenance and the load supply must not be interrupted, the inverter is shut down and the UPS runs on bypass: the cover interlock switch opens automatically when the maintenance bypass cover is removed. Then switch on the maintenance bypass breaker and switch off the mains input, bypass input and output breakers. During manual maintenance bypass, the load is supplied with AC power through the maintenance bypass breaker. The UPS internal circuits are then de-energised (only the maintenance bypass circuit carries power to the load), so maintenance can be carried out safely.

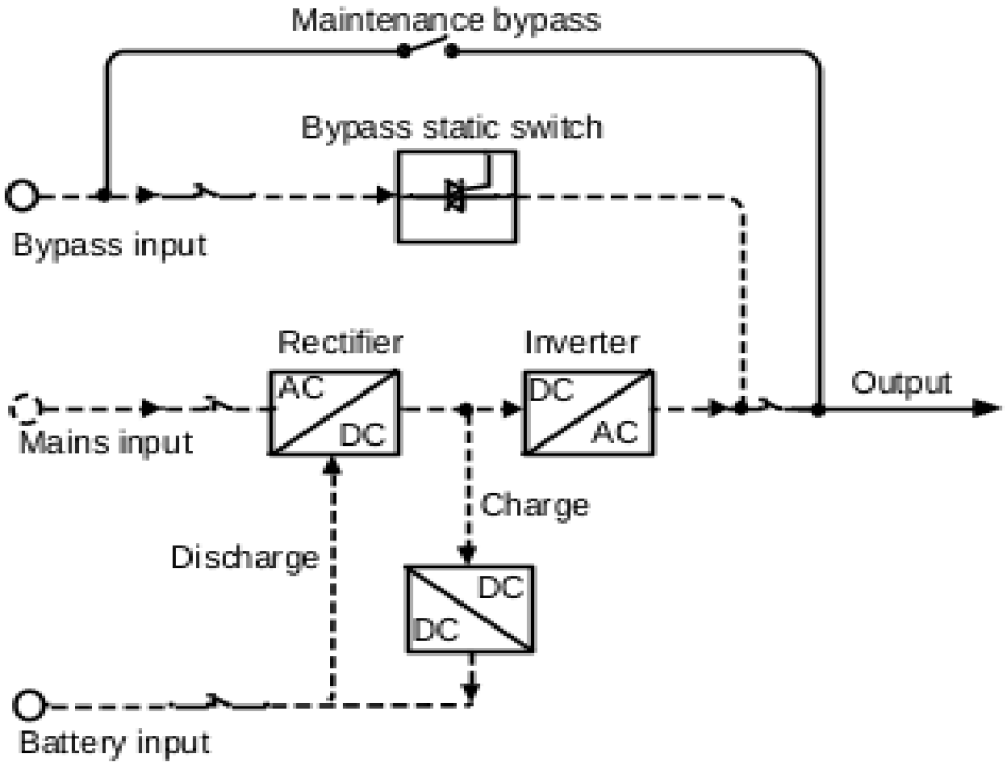

FIGURE 2-13 Maintenance bypass power supply mode (the solid line stands for the energy flow direction)

03

CHAPTER 3

Installation

This chapter describes the installation of the UPS: unpacking and inspection, cable selection, installation, electrical connection, etc.

IN THIS CHAPTER

3.1 Announcements
3.2 Installation Preparation
3.3 Transport and Unpacking
3.4 Mechanical Installation
3.5 Electrical Connection

ROADMAP **From delivery to operation**

1. **Read the safety instructions** — Section 1.1
2. **Unpack and check the delivery** — Section 3.3
3. **Choose the place and prepare the cables and breakers** — Section 3.2
4. **Install and connect** — Section 3.5
5. **Start** — Section 5.2
6. **Check the display and the settings** — Section 4.5
7. **Look after** — Section 5.5

3.1 Announcements

- Use insulated tools to avoid electric shock.
- The terminals can carry hazardous voltage: make sure they are de-energised before connecting any cable.
- Place the UPS level on the floor; avoid tilting and uneven floors.
- DO NOT place objects on the UPS or sit on it.

3.2 Installation Preparation

3.2.1 Tools

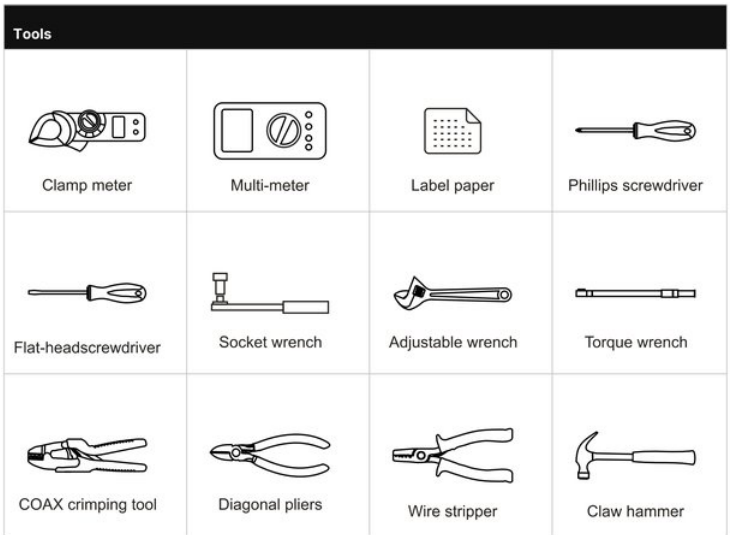

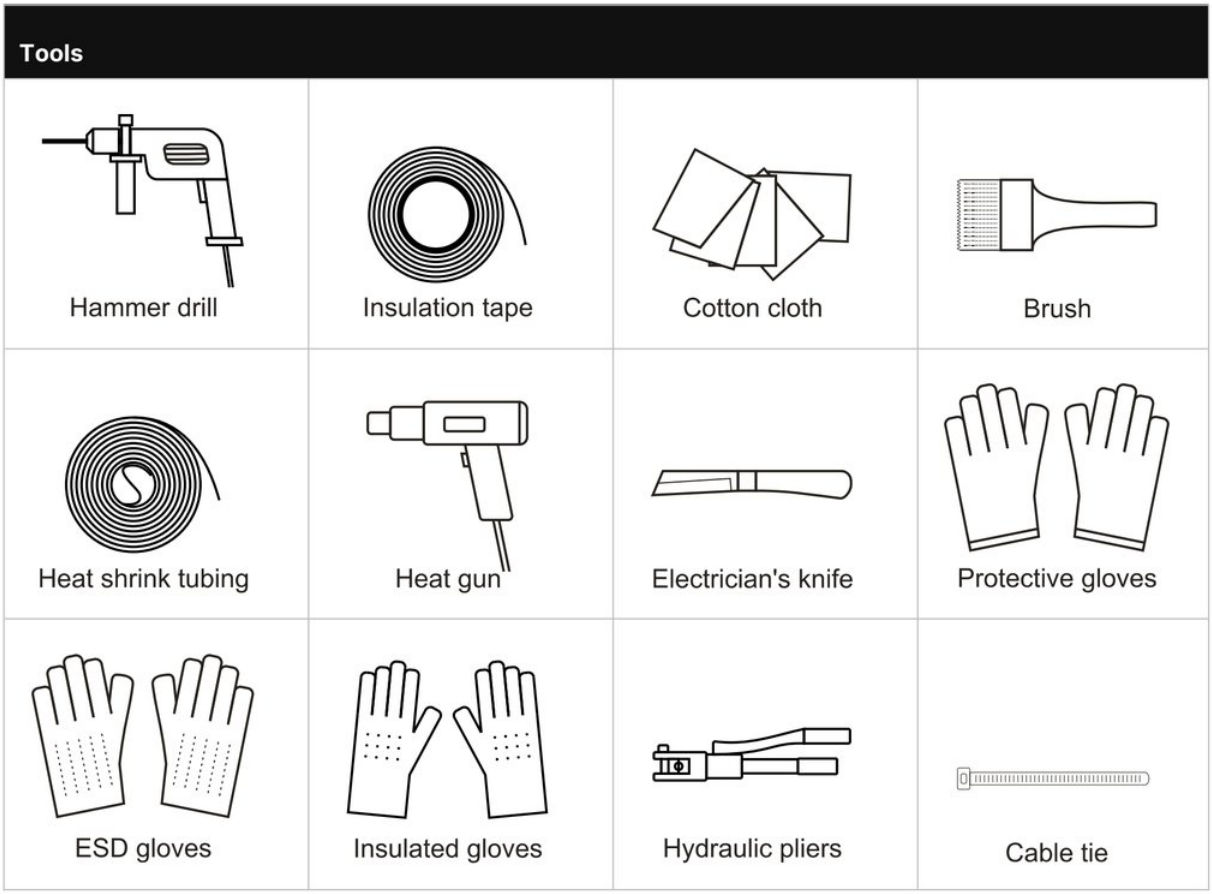

3.2.2 Install Environment

The installation site must be well ventilated and away from water, heat sources and flammable or explosive materials. Do not install the UPS in direct sunlight or where there is dust, volatile gas, corrosive substances or a high salt content in the air.

3.2.3 Install Space

The installation site must have enough space for the device. Keep a clearance of at least 300 mm between the rear panel of the UPS and the wall or other equipment.

3.2.4 Select Breaker & Wires

The AC input and output cables, the DC input cables and the corresponding breakers are selected according to the maximum steady-state phase current of the UPS. Table 3-1 and Table 3-2 give the maximum steady-state phase current for each operating mode, Table 3-3 and Table 3-4 the rated current of the recommended breakers, Table 3-5 to Table 3-7 the minimum recommended cable cross-sections, and Table 3-8 and Table 3-9 the matching wiring terminals. Select the cables and breakers according to Table 3-1 to Table 3-9.

TABLE 3-1 UPS max. steady state phase current

Type	10K			15K			20K		
	33 mode	31 mode	11 mode	33 mode	31 mode	11 mode	33 mode	31 mode	11 mode
AC input (A)	19.5	19.5	58.6	27.5	27.5	82.5	35.5	35.5	106.4
Bypass input (A)	19.5	58.6	58.6	27.5	82.5	82.5	35.5	106.4	106.4
DC input (A)	54.8	54.8	54.8	41.1	41.1	41.1	54.8	54.8	54.8
AC output (A)	15.2	45.6	45.6	22.7	68.2	68.2	30.3	90.9	90.9

TABLE 3-2 UPS max. steady state phase current

Type	30K		40K	
	33 mode	31 mode	33 mode	31 mode
AC input (A)	65.7	65.7	81.7	81.7
Bypass input (A)	65.7	197.1	81.7	245.0
DC input (A)	82.2	82.2	109.6	109.6
AC output (A)	45.5	136.4	60.6	181.8

3.2.5 Select Input Breaker

Install an upstream circuit breaker matching the UPS rating to isolate the UPS from the mains (a breaker with feedback contact and double-pole disconnection is recommended). To allow for the battery charging power and the inrush current at switch-on, rate it 1.5 to 2 times the maximum UPS input current. Do not use a breaker with residual-current (earth-leakage) protection, to avoid nuisance tripping. The DC input breaker must be rated for more than 250 Vdc. For breaker selection, see Table 3-3 and Table 3-4.

TABLE 3-3 Recommended breaker list

Type	10K			15K			20K		
	33 mode	31 mode	11 mode	33 mode	31 mode	11 mode	33 mode	31 mode	11 mode
AC input (A)	32*3P	32*3P	80*1P	63*3P	63*3P	100*3 P	63*3P	63*3P	150*3P
Bypass input (A)	32*3P	80*1P	80*1P	63*3P	100*3 P	100*3 P	63*3P	100*3 P	150*3P
DC input (A)	100*3 P	100*3 P	100*3 P	63*3P	63*3P	63*3P	100*3 P	100*3 P	100*3 P
AC output (A)	32*3P	80*1P	80*1P	63*3P	100*3 P	100*3 P	63*3P	100*3 P	100*3 P

TABLE 3-4 Recommended breaker list

Type	30K		40K	
	33 mode	31 mode	33 mode	31 mode
AC input (A)	100*3P	100*3P	100*3P	100*3P
Bypass input (A)	100*3P	250*1P	100*3P	300*1P
DC input (A)	125*3P	125*3P	175*3P	175*3P
AC output (A)	100*3P	200*1P	100*3P	250*1P

CAUTION

Rated voltage of the recommended breakers: AC input, bypass input and AC output 250 Vac; DC input 250 Vdc.

3.2.6 Select Wires

NOTE

When the cross-section of a single cable would exceed 25 mm², it is recommended to use two cables in parallel.

The recommended cross-sections for AC input, output and battery cables are given in Table 3-5, Table 3-6 and Table 3-7. These values are for reference only and apply to cable lengths of about 5 m. If a cable is longer than 20 m, its cross-section must be increased.

TABLE 3-5 Recommended cross-sectional area of wire (unit: mm², ambient temperature: 25 °C)

Item	33 mode				
	10K	15K	20K	30K	40K
Mains input live wire (U/V/W)	4	6	6	16	16
Mains input neutral wire (N)	4	6	6	16	16
Bypass input neutral wire (N)	4	6	6	16	16
Bypass input live wire (U/V/W)	4	6	6	16	16
Mains output live wire (U/V/W)	4	6	6	16	16
Mains output neutral wire (N)	4	6	6	16	16
DC input (BATT.+/N/-)	10	10	10	2*10	2*10
Grounding wire (PE)	4	6	6	16	16

TABLE 3-6 Recommended cross-sectional area of wire (unit: mm², ambient temperature: 25 °C)

Item	31 mode				
	10K	15K	20K	30K	40K
Mains input live wire (U/V/W)	4	6	6	16	16
Input neutral wire (N)	16	25	25	2*25	2*25
Bypass input live wire (L)	16	25	25	2*25	2*25
Mains output live wire (L)	16	25	25	2*25	2*25
Mains output neutral wire (N)	16	25	25	2*25	2*25
DC input (BATT.+/N/-)	10	10	10	2*10	2*10
Grounding wire (PE)	2*10	2*10	2*10	25	25

TABLE 3-7 Recommended cross-sectional area of wire (unit: mm², ambient temperature: 25 °C)

Item	11 mode		
	10K	15K	20K
Mains input live wire (L)	16	25	25
Input neutral wire (N)	16	25	25
Bypass input live wire (L)	16	25	25
Mains output live wire (L)	16	25	25
Mains output neutral wire (N)	16	25	25
DC input (BATT.+/N/-)	10	10	10
Grounding wire (PE)	2*10	2*10	2*10

TABLE 3-8 Cables and matching wiring terminals

Cable cross-section (unit: mm²)	Wiring terminal type
4	RVS3.5-5
6	RVS5.5-5
10	RNBS8-5
16	RNBS14-6
25	RNBS22-6

The recommended wiring terminal types are listed in Table 3-8. If other terminals are used, check their dimensions against Table 3-9.

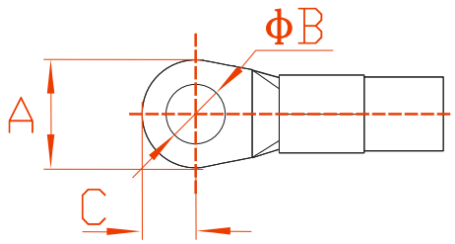

FIGURE 3-1 Dimensions of wiring terminal

TABLE 3-9 Dimension limits of wiring terminals

Dimensions (unit: mm)	10K/15K/20K	30K/40K
A	≤14.5	≤16.8
B	≥4	≥6.2
C	≤7.15	≤8.5

> **NOTE**
> The cables supplied with the UPS are certified (IEC/UL) and meet the applicable safety standards. Some supplied cables shorter than 0.5 m have a slightly smaller section than recommended; this is acceptable for these lengths.

3.3 Transport and Unpacking

3.3.1 Transport

> **CAUTION**
> 1. The UPS must be transported by trained professionals.
> 2. Handle the UPS gently during transport; avoid impacts and drops.
> 3. If the UPS is to be stored for a long time after unpacking, wrap it in its original plastic bag.

The UPS can be moved with a forklift or a pallet truck. When lifting, the centre of gravity of the device must be centred on the forks. Move the device slowly and steadily.

> **CAUTION**
> During transport, take care to avoid impacts and falls.
>
> Keep the UPS upright while moving it, and do not lower or lift it suddenly.



FIGURE 3-2 Forklift transportation

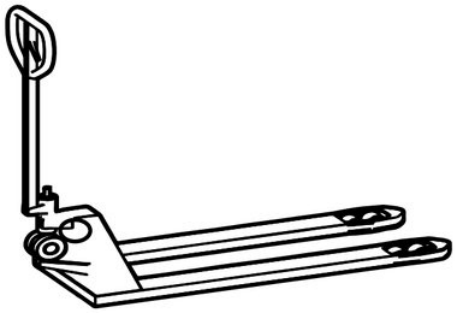

FIGURE 3-3 Pallet truck transportation

3.3.2 Unpacking

> **NOTE**
> Choose the unpacking site in advance, as close as possible to the installation site.

PROCEDURE

1. Check that the packaging is in good condition and has not been damaged in transit. If it is damaged, inform the carrier immediately.
2. Move the UPS to the designated site.
3. Open the outer packaging and take out the accessories.
4. Check the UPS.
   - Inspect the UPS for transport damage. If it is damaged, inform the carrier immediately.
   - Check against the packing list that all accessories are present and correct. If anything is missing or the model is wrong, note it and contact your local AEC office or distributor.
5. Lower the front panel of the crate to form a ramp.
6. After checking, use a socket wrench to remove the bolts that fix the UPS supporting plate to the wooden base (bolt positions as shown in Figure 3-4), then remove the supporting plate.

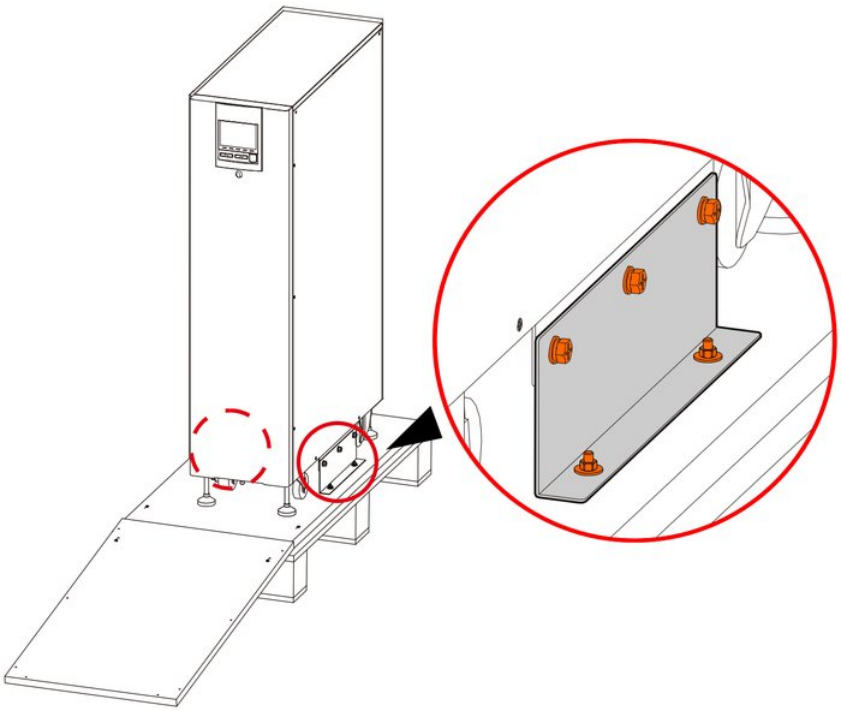

FIGURE 3-4 Bolts position

NOTE

The bolt positions are the same on all 10K-40K models; the figure above shows the 40 kVA model. The 10K/15K/20K UPS has no support feet.

7 Slowly slide the UPS down the ramp to the floor.

CAUTION

Moving the UPS requires two people (one on each side) to avoid tipping and personal injury.

3.4 Mechanical Installation

NOTE

This section describes installation with floor anchoring as an example; adapt the procedure to the actual site conditions.

PROCEDURE

1 Plan the installation position according to the device dimensions (see the outer-dimension drawings below) and the space requirements (see 3.2.3 Install Space).

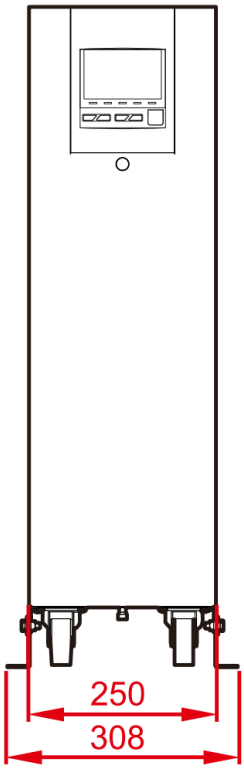

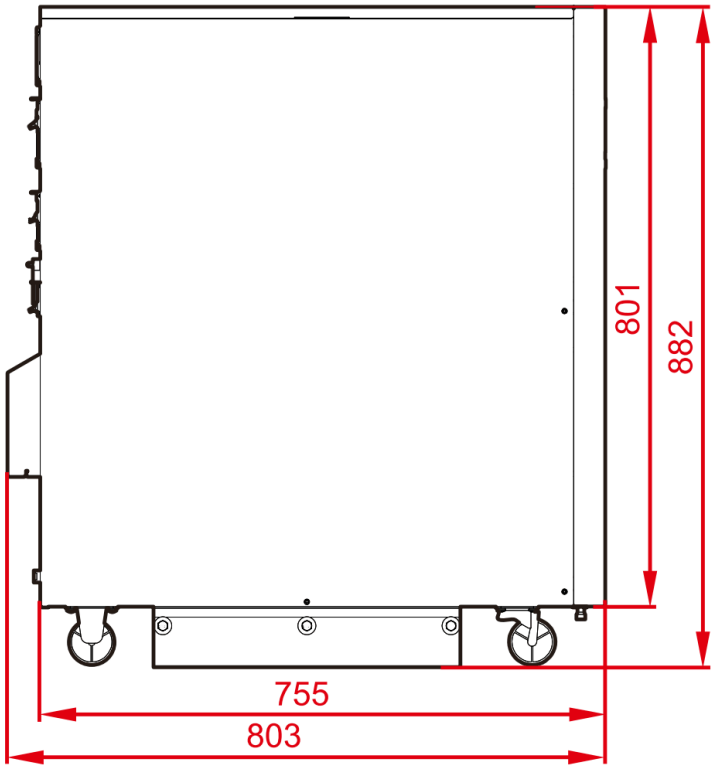

Outer dimensions of 10K/15K/20K UPS (unit: mm)

Outer dimensions of 30K/40K UPS (unit: mm)

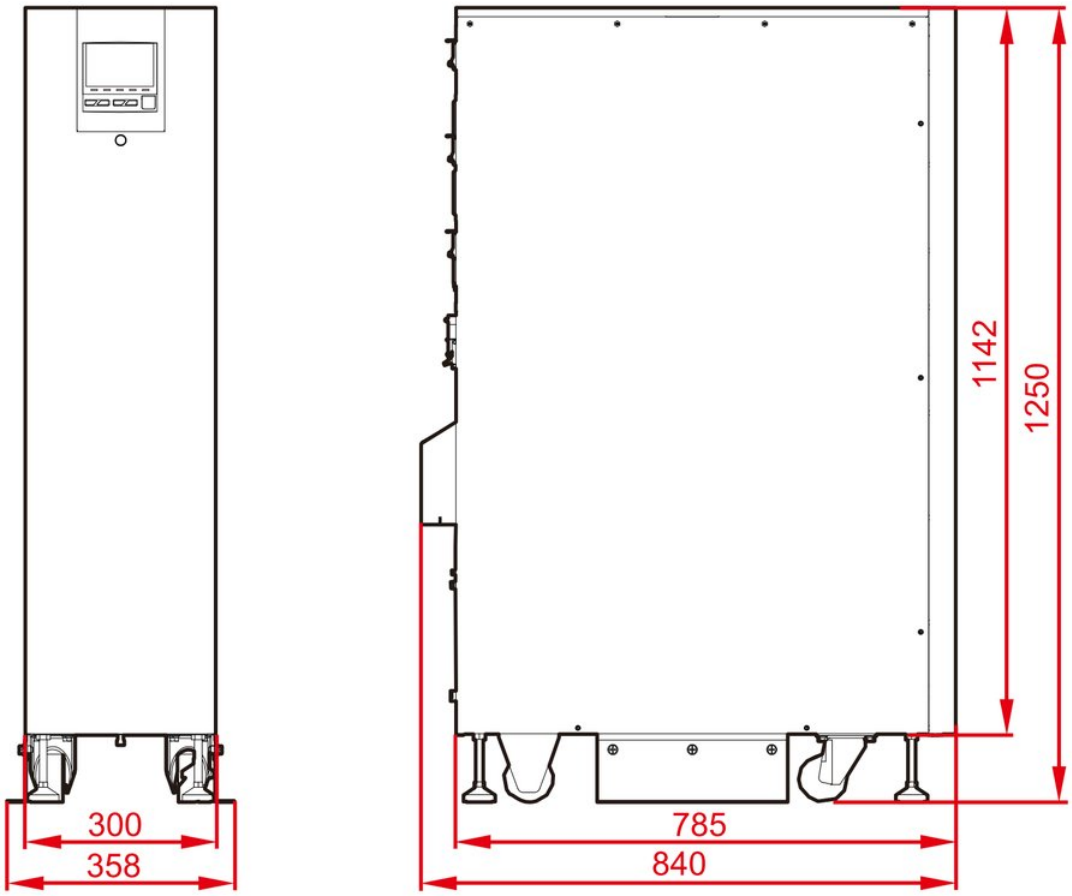

2 Using an impact drill, drill four φ10 holes in the floor according to the pedestal hole pattern. The hole pattern of each model is shown in Figure 3-5 and in the 30K/40K pedestal drawing below (drilling tolerance ±2 mm). Fit M8 expansion bolts; their structure and installation are shown in Figure 3-6.

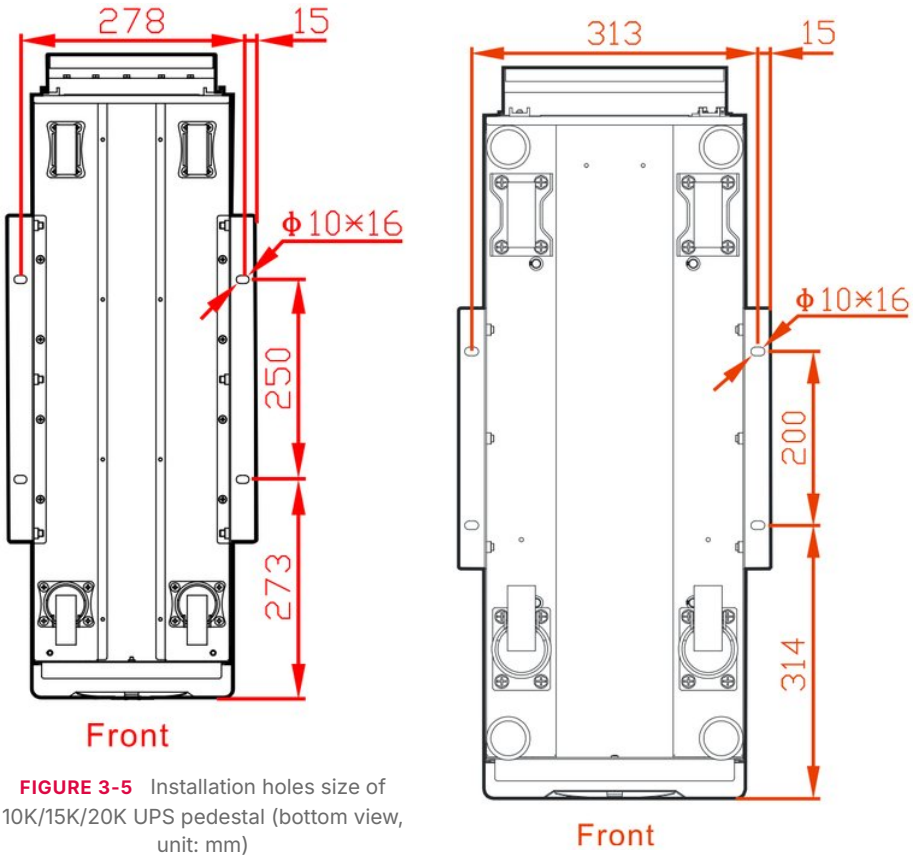

FIGURE 3-5 Installation holes size of 10K/15K/20K UPS pedestal (bottom view, unit: mm)

Installation hole size of 30K/40K UPS pedestal (bottom view, unit: mm)

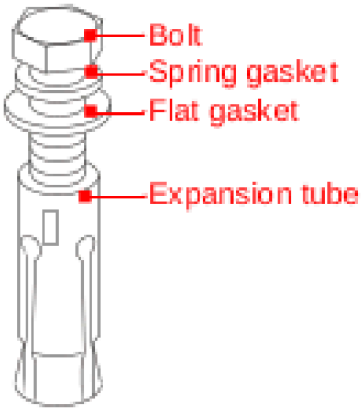

1. Drill holes on the installation ground by hammer drill.
2. Tighten the expansion bolts mildly, and put it to the hole vertically, and then knock the expansion bolt by rubber hammer till all the expansion tube into the hole.
3. Pre tighten the expansion bolt.
4. Screw out the bolt , take down the spring gasket and flat gasket.

FIGURE 3-6 Expansion bolt structure and installation

NOTE

The expansion bolts must not protrude more than 50 mm.

3. Move the UPS above the holes, pre-lock the supporting plate (not fully locked, leave one-third to two-thirds of the screws). Move and align the bottom installation hole of the supporting plate with the expansion bolt. Fit the flat washer (Φ8) and spring washer (Φ8), then screw in the bolts. Tighten the six unlocked screws of supporting plate.
4. Then lower the UPS supporting feet by turning them anticlockwise until the UPS is level (30K/40K only).

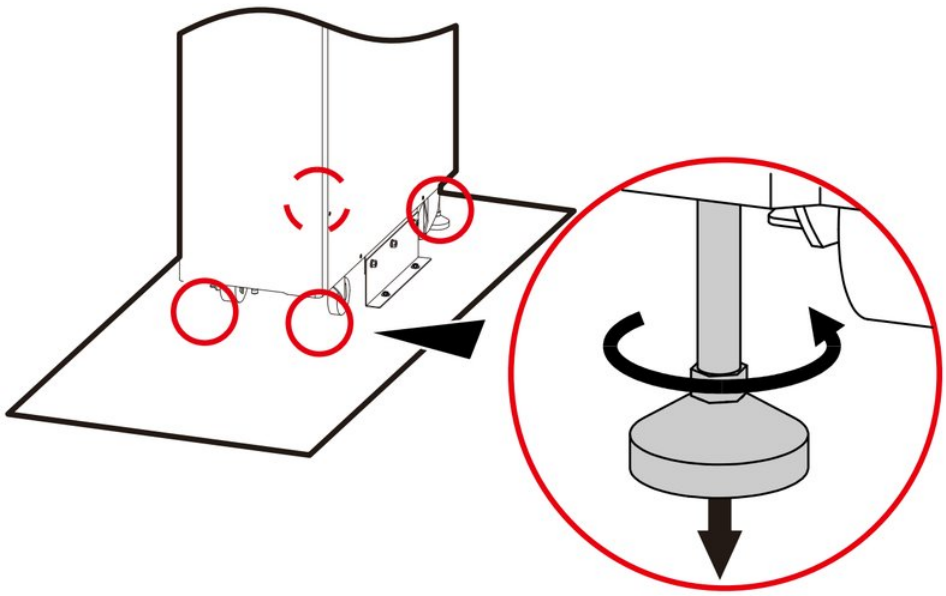

FIGURE 3-7 Screw down the supporting feet brackets

NOTE

1. This step does not apply to the 10 kVA / 15 kVA / 20 kVA models, which have no support feet. 2. Turn the support feet clockwise to raise them and anticlockwise to lower them. 3. Do not adjust one foot only: adjust all four feet evenly, a little at a time, to avoid tilting or even damage to the device.

CAUTION

Move the UPS steadily and avoid tilting it.

3.5 Electrical Connection

WARNING

1. Before wiring, make sure that all UPS breakers (mains input, bypass, battery and output) and the upstream breakers are open. Never connect live cables.
2. Do not route power cables where they can be stepped on or tripped over.
3. DO NOT move the UPS after the cables are connected.

3.5.1 UPS Wiring Operation

10K/15K/20K UPS

NOTE

The wiring procedure is the same for all 10K-20K models; the 10 kVA model is shown below as an example.

PROCEDURE

1. Remove the wiring cover plate. There are notches at the bottom of the cover plate: first remove the cover plate screws, then lift the wiring cover plate upwards to remove it.

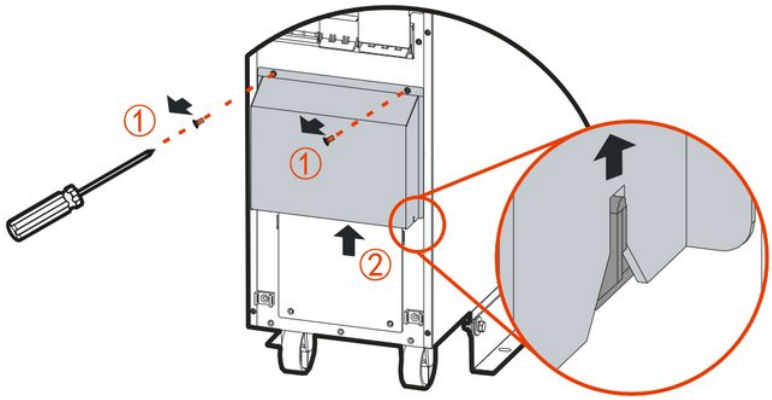

FIGURE 3-8 Remove the wiring cover plate

2. The 10K/15K/20K UPS has three modes, 33, 31 and 11; the terminal markings are shown in Figure 3-9. The wiring terminals differ slightly between 33, 31 and 11 mode, as shown in Figure 3-10 to Figure 3-13.

M	INPUT				BYPASS			OUTPUT				
33	U	V	W	N	U	V	W	U	V	W	N	⏚
31	U	V	W	N	L			L			N	
11	L			N	L			L			N	

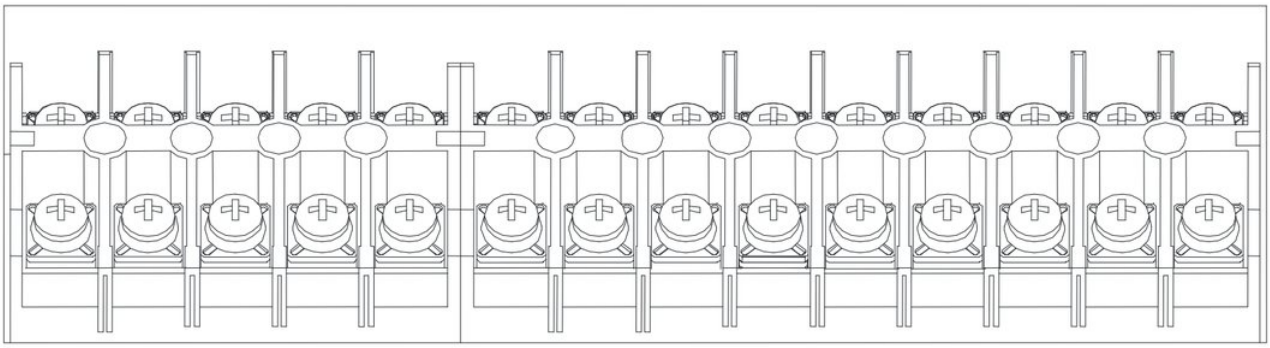

FIGURE 3-9 Wiring terminal marking

NOTE

Phases are marked U, V, W (equivalent to L1, L2, L3; A, B, C; or R, S, T).

- 33 mode Wiring method 1: Different input sources for mains and bypass.

When the mains input and bypass input come from different sources, they are connected separately, as shown in Figure 3-10.

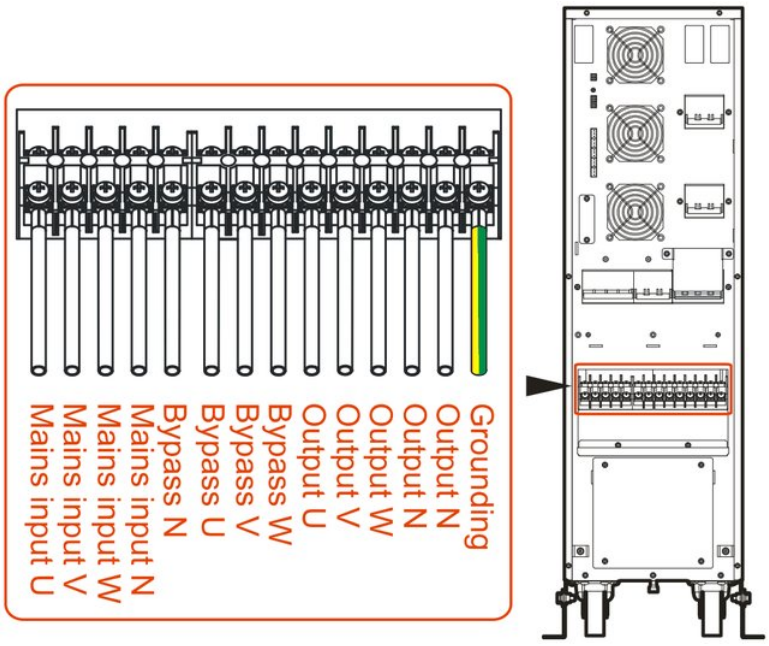

FIGURE 3-10 Wiring diagram 1 of 33 mode

Wiring method 2: Common input source for mains and bypass.

When the mains input and bypass input come from the same source, the bypass input is linked to the mains input with the short-circuit wires, as shown in Figure 3-11.

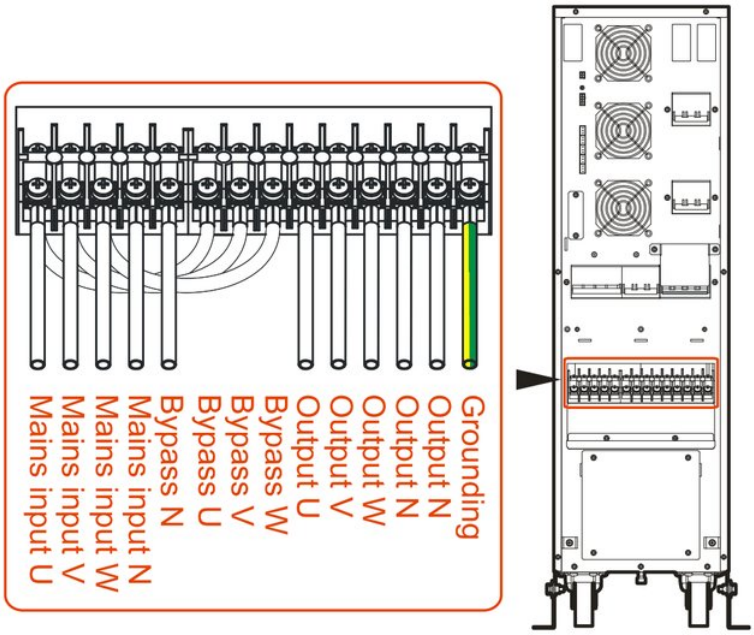

FIGURE 3-11 Wiring diagram 2 of 33 mode

- 31 mode Take a pair of 1# and 2# connector jumpers (optional accessories) and fit them to the UPS wiring terminals (as shown in Figure 3-12). Then connect the cables to the corresponding terminals according to the wiring diagram.
- 11 mode

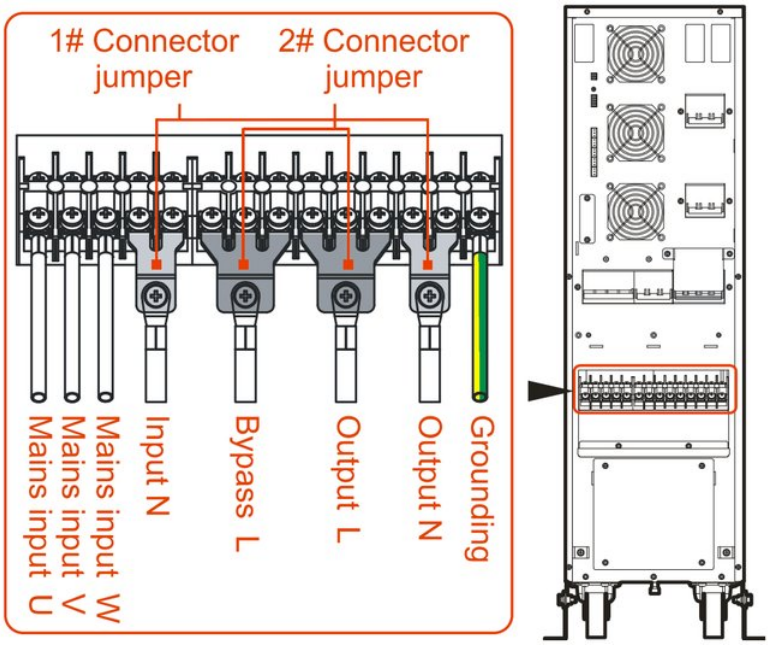

FIGURE 3-12 Connector jumper and wiring diagram of 31 mode

Take a pair of 1# connector jumpers and three 2# connector jumpers (optional accessories) and fit them to the UPS wiring terminals (as shown in Figure 3-13). Then connect the cables to the corresponding terminals according to the wiring diagram.

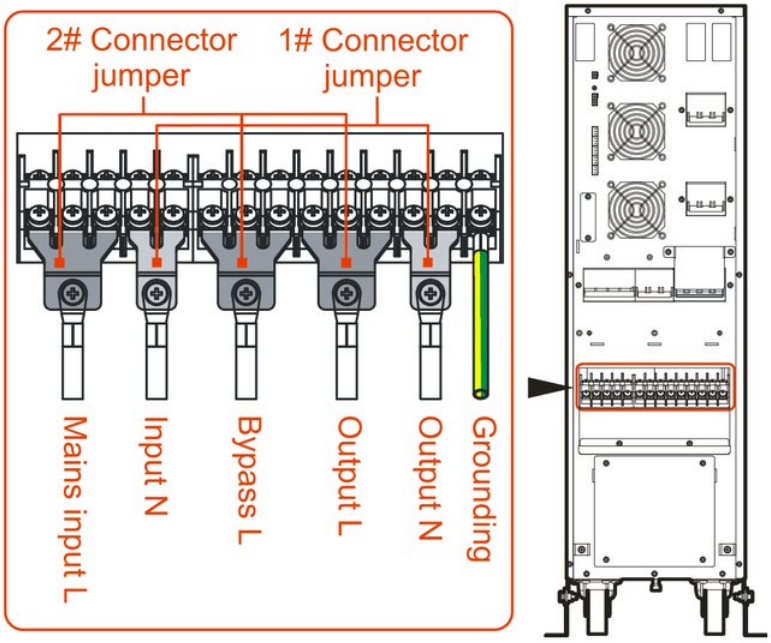

FIGURE 3-13 Connector jumper and wiring diagram of 11 mode

⚠ CAUTION

1. To change the mode of a 10K-20K series UPS: 1) switch off the UPS completely; 2) rewire strictly as shown in the steps above; 3) connect only the mains, keeping the bypass breaker open; 4) set the work configuration on the screen to match the actual wiring; 5) check again that the wiring matches the screen configuration, then start the UPS; 6) close the bypass breaker once the inverter output is normal.
2. For the corresponding screen settings, see 4.5.7 Device Configuration Page.
3. For example: to set a 10 kVA UPS to 31 mode, wire it according to the 31-mode wiring diagram and set the work configuration on the screen to 31.

NOTE

1. In 31/11 mode with separate sources for input and bypass, connect the neutral (N) to the input N terminal. 2. After wiring, check that all cables are connected correctly and none is missing.

CAUTION

1. On the 10kVA (S)/15kVA (S)/20kVA (S) the external battery port is live (internal batteries): take care when wiring. Do not remove its cover unless you are connecting an external battery.
2. Wire the UPS strictly as shown in the figures to avoid short circuits.
3. Before refitting the wiring cover plate, make sure that all cables are connected to the terminals properly and securely.

3 Reinstall the wiring cover plate.

4 Divide the cables into two bundles and fix them to the bottom of the device with cable ties.

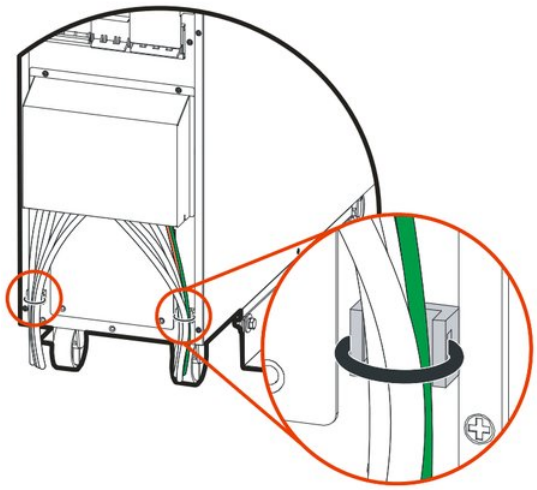

FIGURE 3-14 Wires fixation

NOTE

1. The 10kVA (T)/15kVA (T)/20kVA (T) has a fan on the rear panel: do not block the air vents when fixing the cables. 2. If an external battery is connected, fix its cables together with the other cables at the bottom of the device with cable ties once the battery wiring is complete.

30KVA/40KVA

NOTE

The wiring procedure is the same for the 30K and 40K models; the 40 kVA model is shown below as an example.

PROCEDURE

1 Remove the wiring cover plate. There are notches at the bottom of the cover plate: first remove the cover plate screws, then lift the wiring cover plate upwards to remove it, as shown in Figure 3-15. Then unscrew the bolt on the mode connector cover plate and remove it, as shown in Figure 3-16.

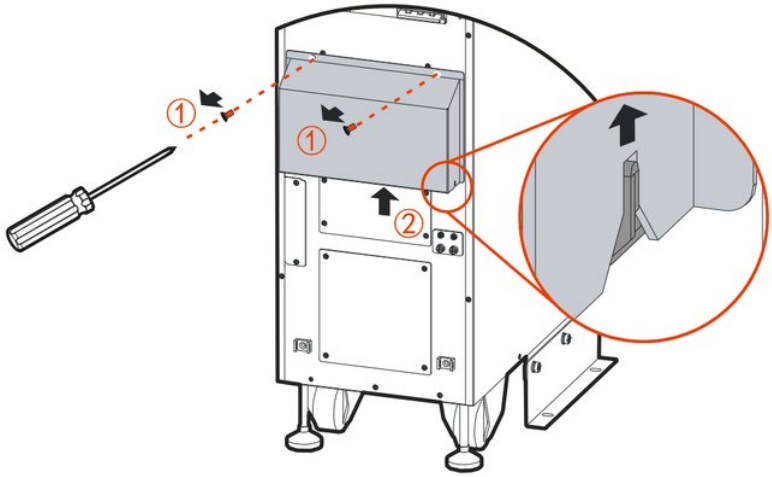

FIGURE 3-15 Remove the wiring cover plate

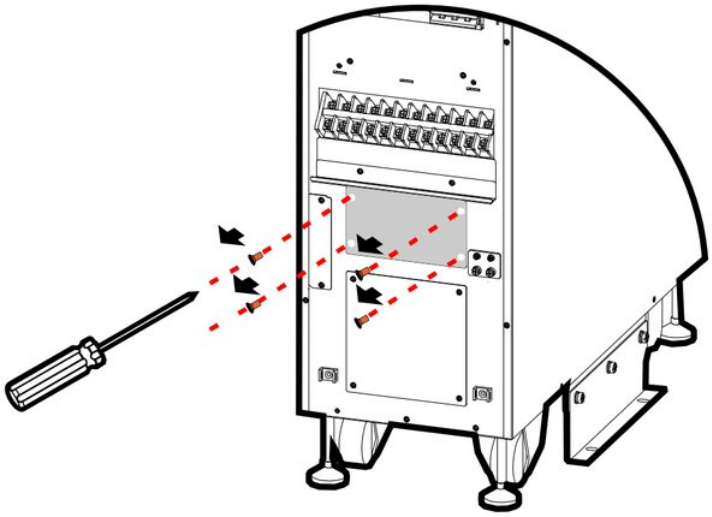

FIGURE 3-16 Unscrew the bolt on the mode connector cover plate

2 The 30K/40K UPS has two modes, 33 and 31; the terminal markings are shown in Figure 3-17. The mode connector is factory-set to 33 mode (as shown in Figure 3-18); to change the mode, the position of the mode connector and the wiring must be changed.

M	INPUT				BYPASS				OUTPUT			
33	U	V	W	N	N	U	V	W	U	V	W	N
31	U	V	W	N		L			L		N	

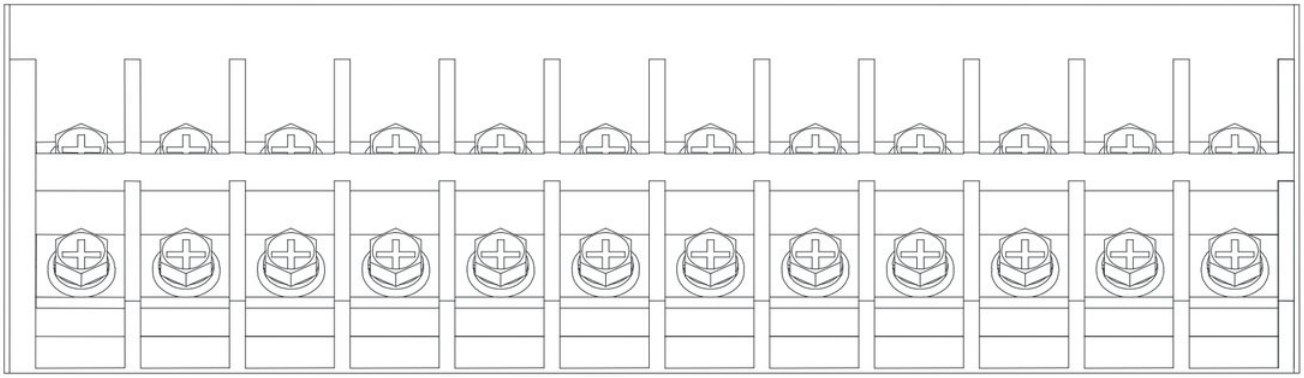

FIGURE 3-17 Wiring terminal marking

> **NOTE**
> Phases are marked U, V, W (equivalent to L1, L2, L3; A, B, C; or R, S, T).

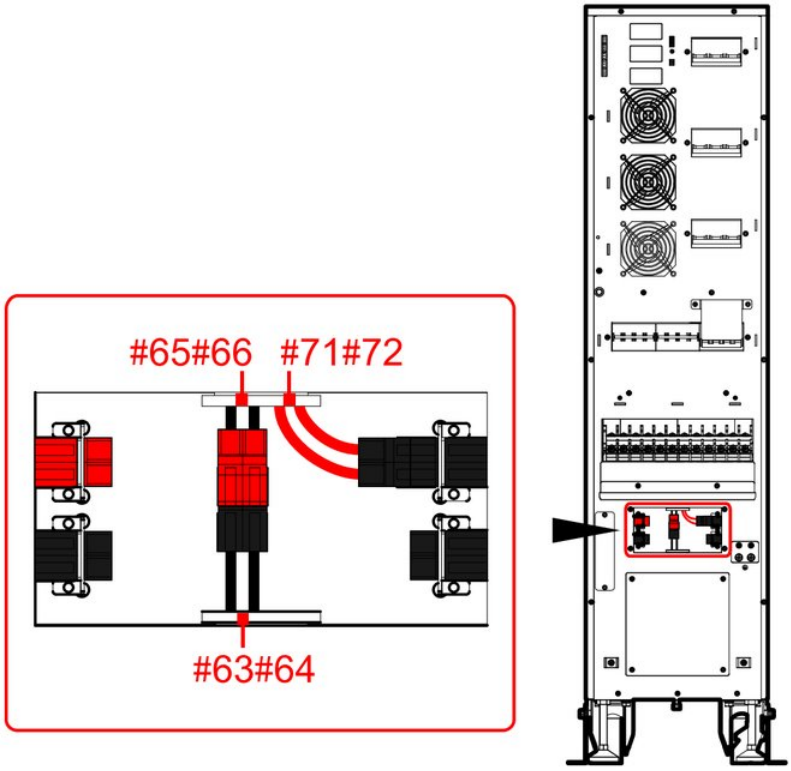

FIGURE 3-18 Mode connector of default factory

- 33 mode

Wiring method 1: Different input sources for mains and bypass.

When the mains input and bypass input come from different sources, they are connected separately. The mode connector stays in its factory position (as shown in Figure 3-18). Connect the cables to the terminals according to the terminal markings. The 33-mode wiring diagram is shown in Figure 3-19.

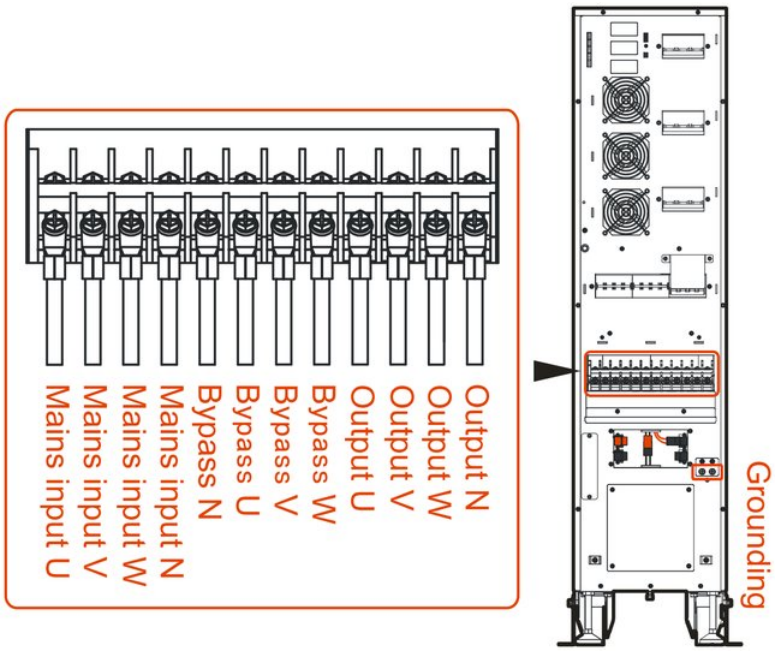

FIGURE 3-19 Wiring diagram 1 of 33 mode

Wiring method 2: Common input source for mains and bypass.

When the mains input and bypass input come from the same source, the bypass input is linked to the mains input with the short-circuit wires. The mode connector stays in its factory position (as shown in Figure 3-18). Connect the cables to the terminals according to the terminal markings. The 33-mode wiring diagram is shown in Figure 3-20.

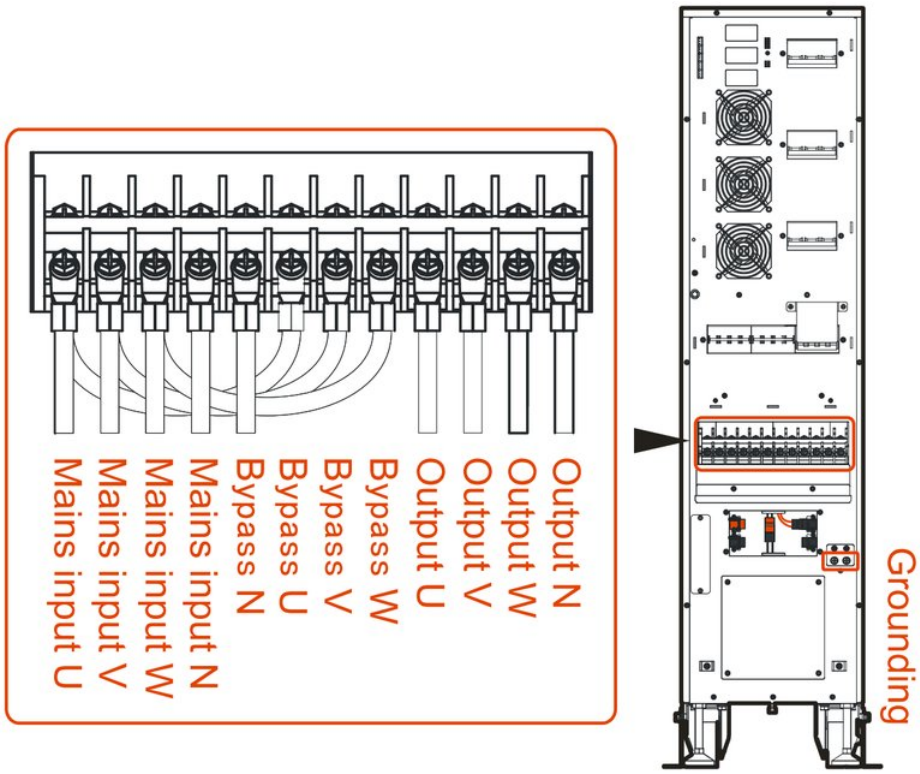

FIGURE 3-20 Wiring diagram 2 of 33 mode

- Changing from 33 mode to 31 mode

To change from 33 mode to 31 mode, first pull out the mode connector from its factory position (as shown in Figure 3-18), then insert it into the 31-mode port (as shown in Figure 3-21). Take three 3# connector jumpers and one 4# connector jumper (optional accessories) and fit them to the UPS wiring terminals (as shown in Figure 3-22).

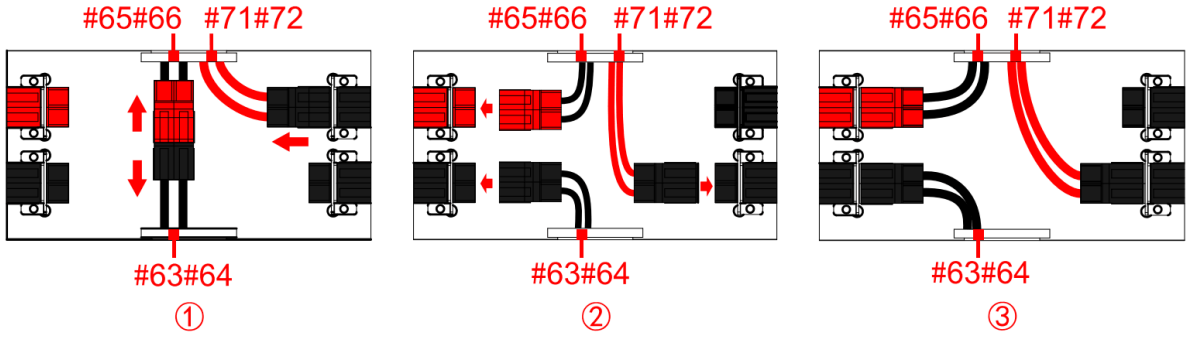

FIGURE 3-21 Mode connector diagram of 31 mode

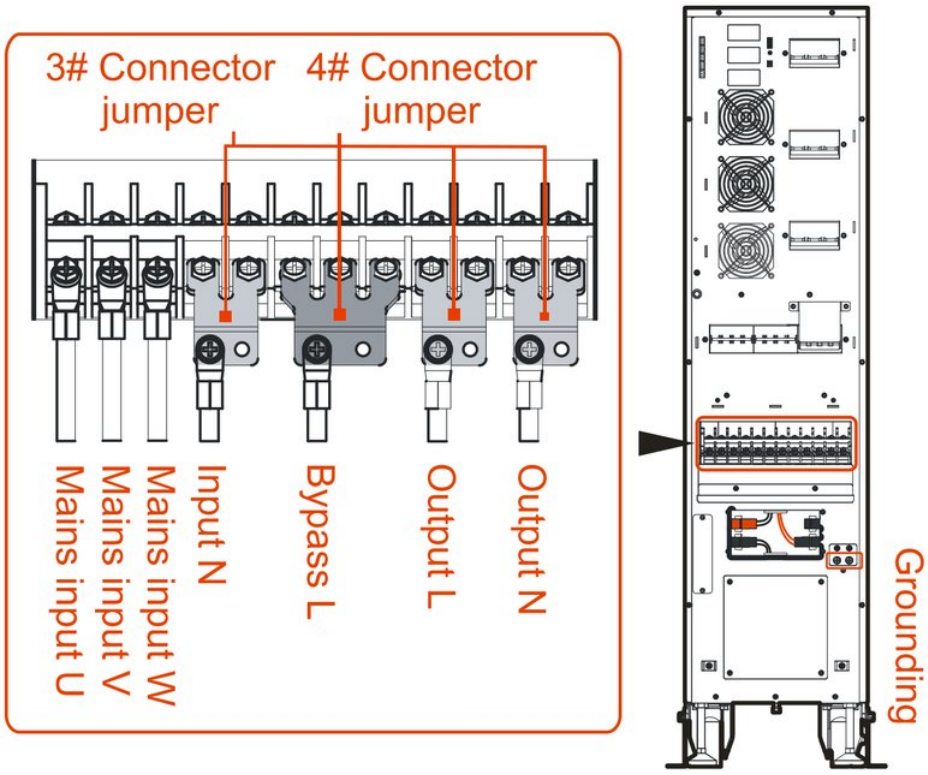

FIGURE 3-22 Connector jumper and wiring terminal diagram of 31 mode

CAUTION

1. To change the mode of a 30K-40K series UPS: 1) switch off the UPS completely; 2) rewire and reposition the mode connector strictly as shown in the steps above; 3) connect only the mains, keeping the bypass breaker open; 4) set the work configuration on the screen to match the actual wiring; 5) check again that the wiring and mode connector match the screen configuration, then start the UPS; 6) close the bypass breaker once the inverter output is normal.
2. For the corresponding screen settings, see 4.5.7 Device Configuration Page.
3. For example: to set a 40 kVA UPS to 31 mode, wire it and fit the mode connector according to the 31-mode diagrams, and set the work configuration on the screen to 31.

NOTE

1. In 31 mode with separate sources for input and bypass, connect the neutral (N) to the input N terminal. 2. After wiring, check that all cables are connected correctly and none is missing.

CAUTION

1. On the 30kVA (S)/40kVA (S) the external battery port is live (internal batteries): take care when wiring. Do not remove its cover unless you are connecting an external battery.
2. Wire the UPS strictly as shown in the figures to avoid short circuits.
3. Before refitting the wiring cover plate, make sure that all cables are connected to the terminals properly and securely.

3 Refit the mode connector cover plate first, then the wiring cover plate.

4 Divide the cables into two bundles and fix them to the bottom of the device with cable ties.

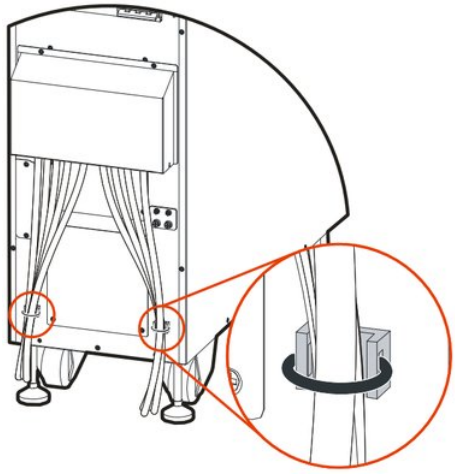

FIGURE 3-23 Wires fixation

> **NOTE**
> 1. The 30kVA (T)/40kVA (T) has a fan on the rear panel: do not block the air vents when fixing the cables. 2. After wiring, check that all cables are connected correctly and none is missing.

3.5.2 Wiring Between UPS and External Battery

> **NOTE**
> S models (internal battery) can also be connected to an external battery for longer back-up time. Standard models (no internal battery) must be connected to an external battery.

The battery input of the 10K-40K series UPS takes a split battery: a positive and a negative string with the neutral at the midpoint. Each string has 8 to 20 12 V blocks on the 10K UPS, and 12 to 20 12 V blocks on the 15K/20K/30K/40K UPS.

Figure 3-24 shows the wiring for the 10K/15K/20K UPS: one battery cabinet with 32 battery blocks (12 V) and one 3P breaker; the external wiring comprises BATT.+, BATT.- and BATT. N.

Figure 3-25 and Figure 3-26 show the wiring methods for the 30K/40K UPS.

- Wiring method 1: 32 battery blocks (12 V) connected separately to the two external battery ports; each battery cabinet has one 3P breaker; the external wiring comprises BATT.+, BATT.- and BATT. N, as shown in Figure 3-25.
- Wiring method 2: 32 battery blocks (12 V) connected to each external battery port; each battery cabinet has one 3P breaker; the external wiring comprises BATT.+, BATT.- and BATT. N, as shown in Figure 3-26.

10K/15K/20K UPS

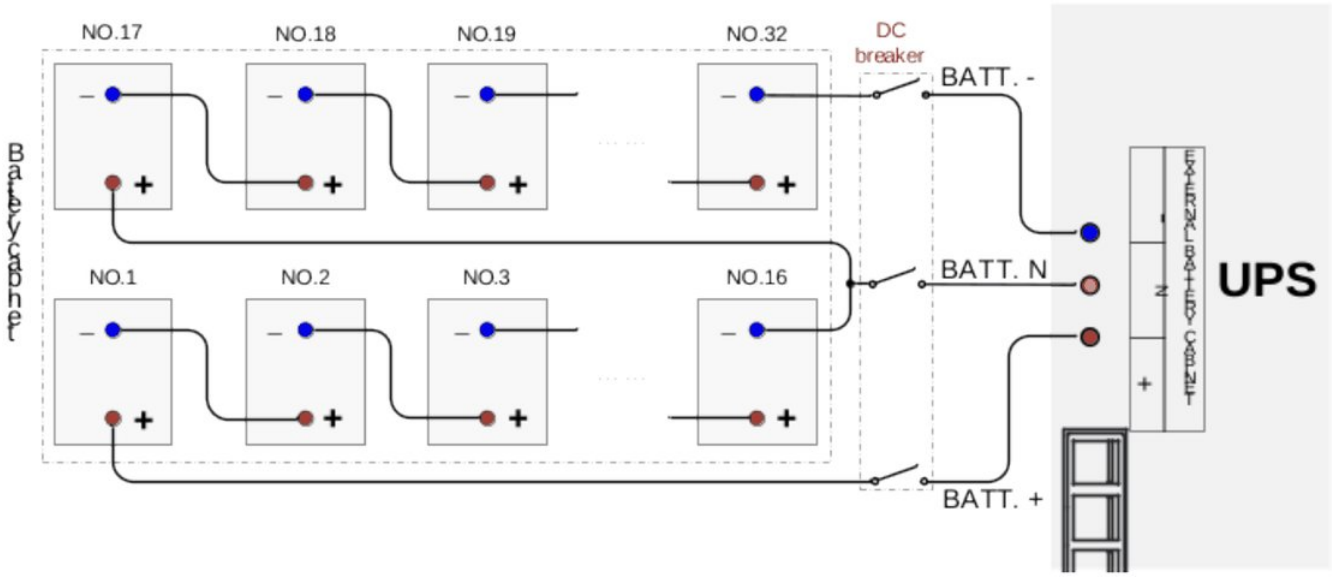

FIGURE 3-24 Wiring diagram of 10K/15K/20K UPS

30K/40K UPS

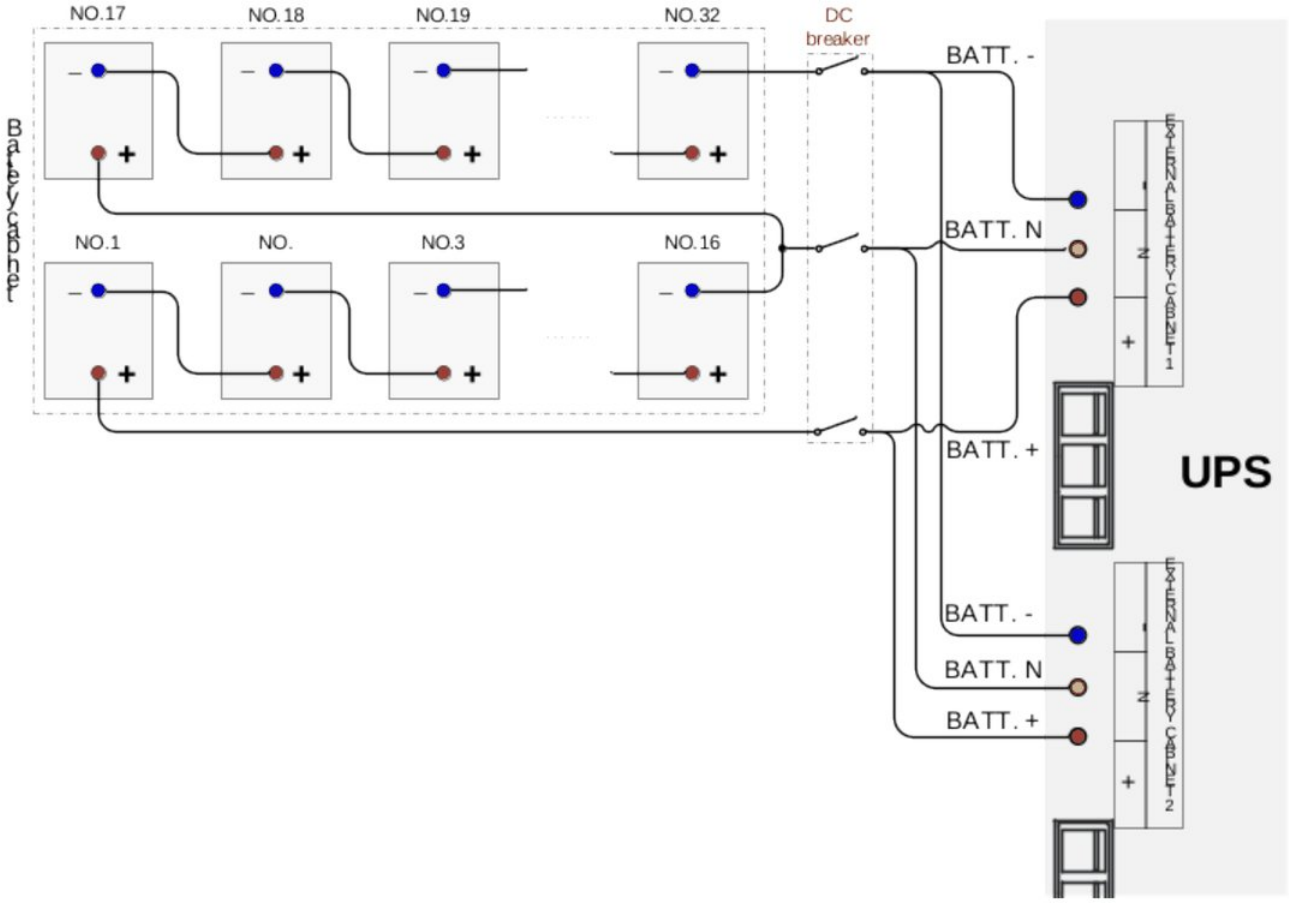

FIGURE 3-25 Wiring diagram 1 of 30K/40K UPS

> **NOTE**
> When two UPS units share external battery cabinets, the battery parameters set on each UPS must be identical (brand, capacity, number of blocks and voltage).

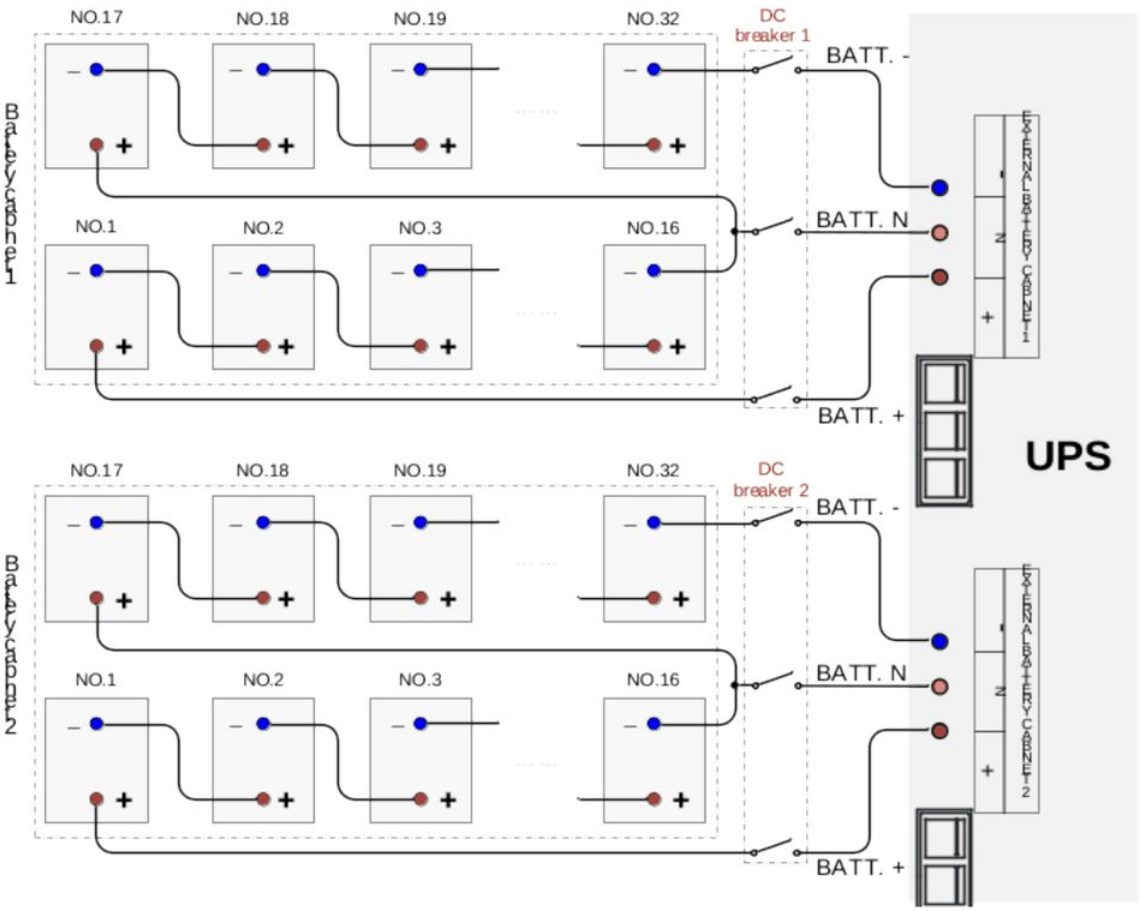

FIGURE 3-26 Wiring diagram 2 of 30K/40K UPS

EXTENSION BATTERY WIRING ASSEMBLY (OPTIONAL)

When an external battery is connected, the optional extension battery wiring assembly can be used; its installation is shown in Figure 3-27 or Figure 3-28.

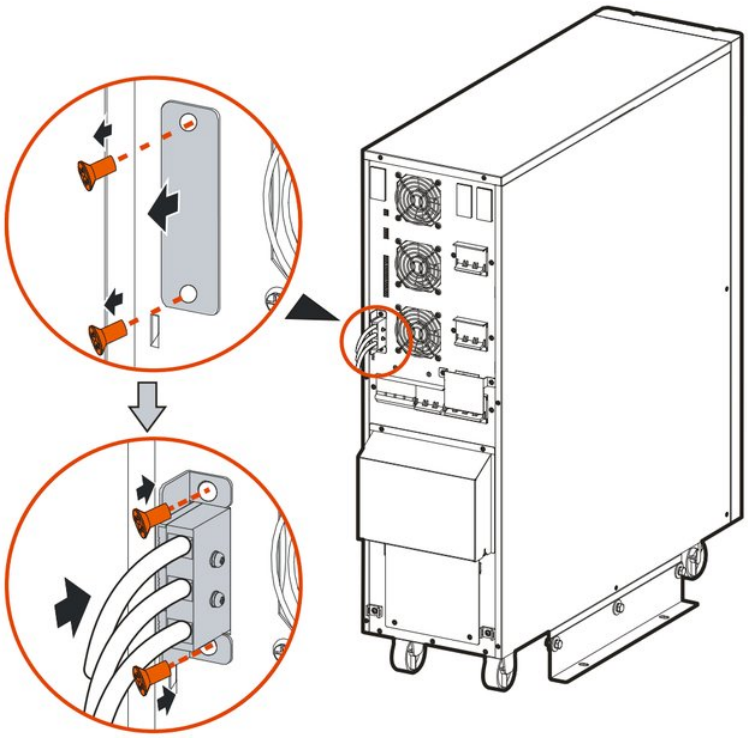

FIGURE 3-27 Extension battery wiring assembly of 10K/15K/20K UPS

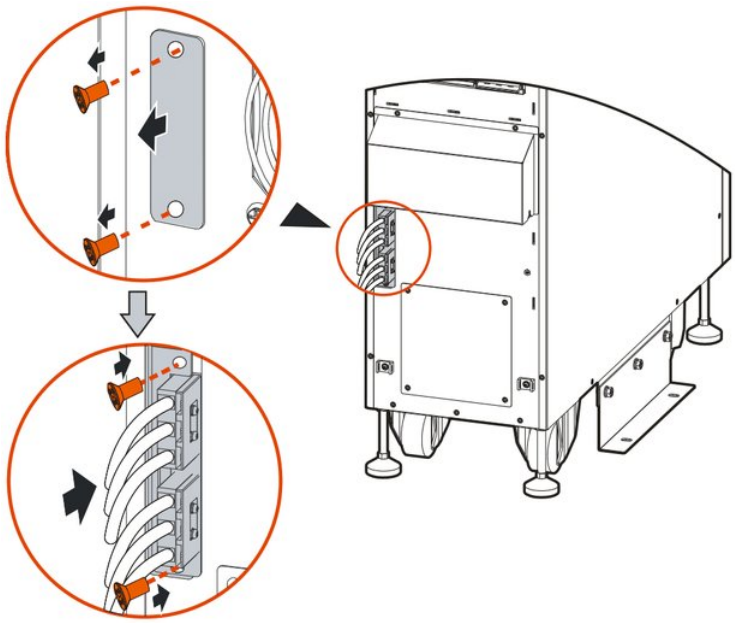

FIGURE 3-28 Extension battery wiring assembly of 30K/40K UPS

> **NOTE**
> The extension battery wiring assembly is available with 1 m or 3 m cables, as required.

3.5.3 Wiring of Parallel System

> **NOTE**
> The standard UPS is a single unit: parallel operation requires the optional Parallel Kit-T(2m) NT-PA.

PROCEDURE

1. Install the batteries and each UPS of the parallel system according to 3.4 Mechanical Installation.
2. Connect the input, bypass, output and battery cables of the parallel system as shown in Figure 3-29 to Figure 3-33.

- 10K/15K/20K UPS

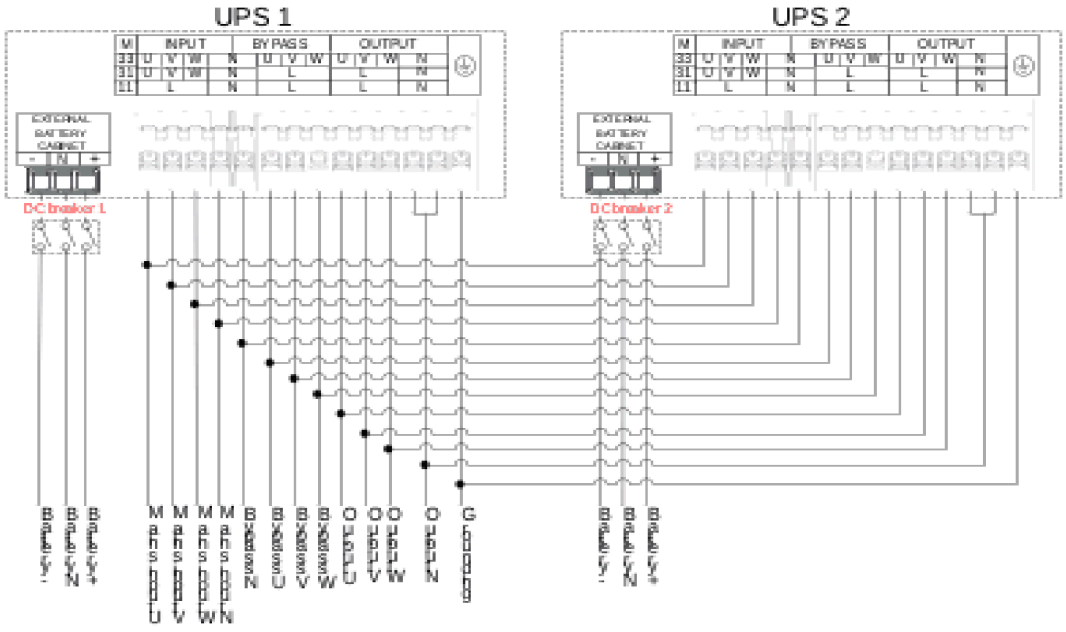

FIGURE 3-29 33 mode parallel system wiring diagram of 10K/15K/20K UPS

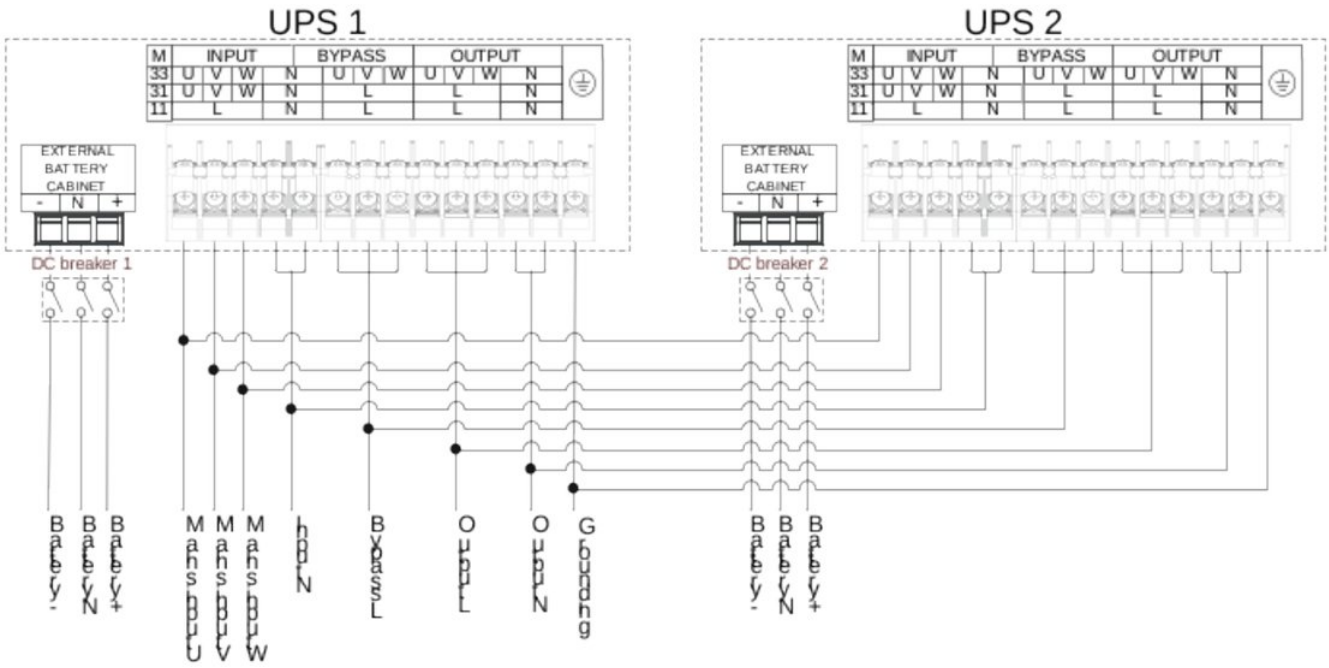

FIGURE 3-30 31 mode parallel system wiring diagram of 10K/15K/20K UPS

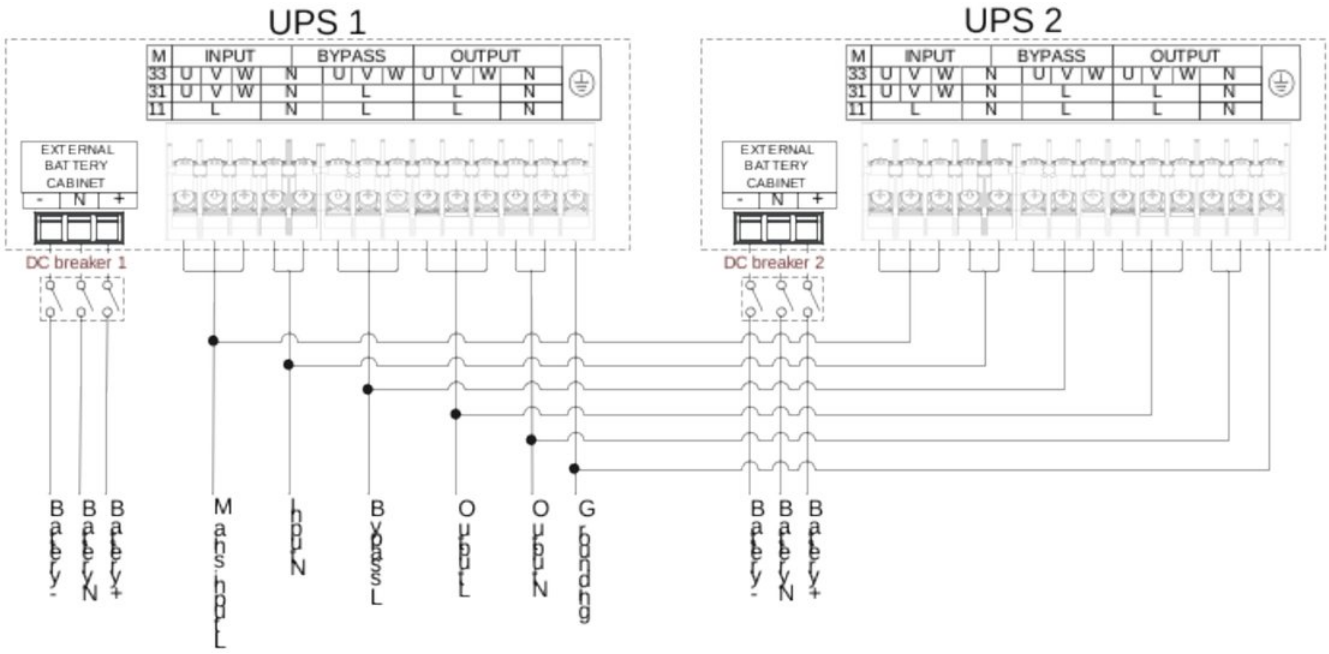

FIGURE 3-31 11 mode parallel system wiring diagram of 10K/15K/20K UPS

- 30 kVA / 40kVA

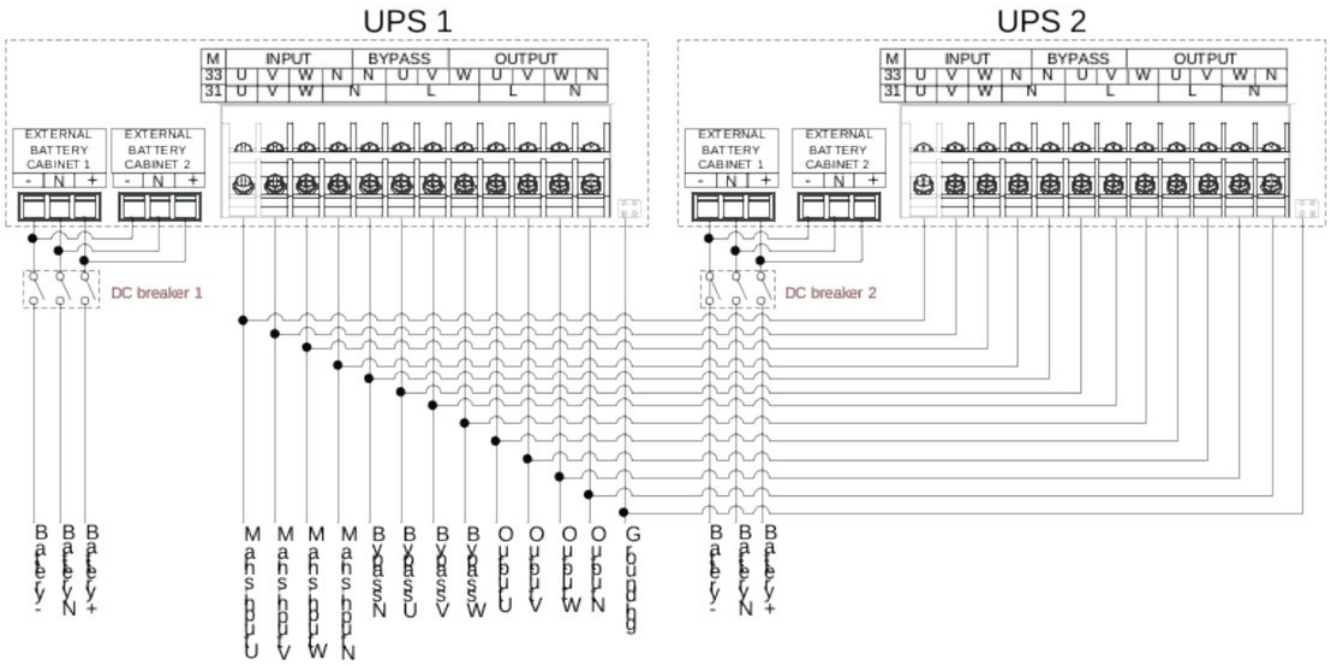

FIGURE 3-32 33 mode parallel system wiring diagram of 30K/40K UPS

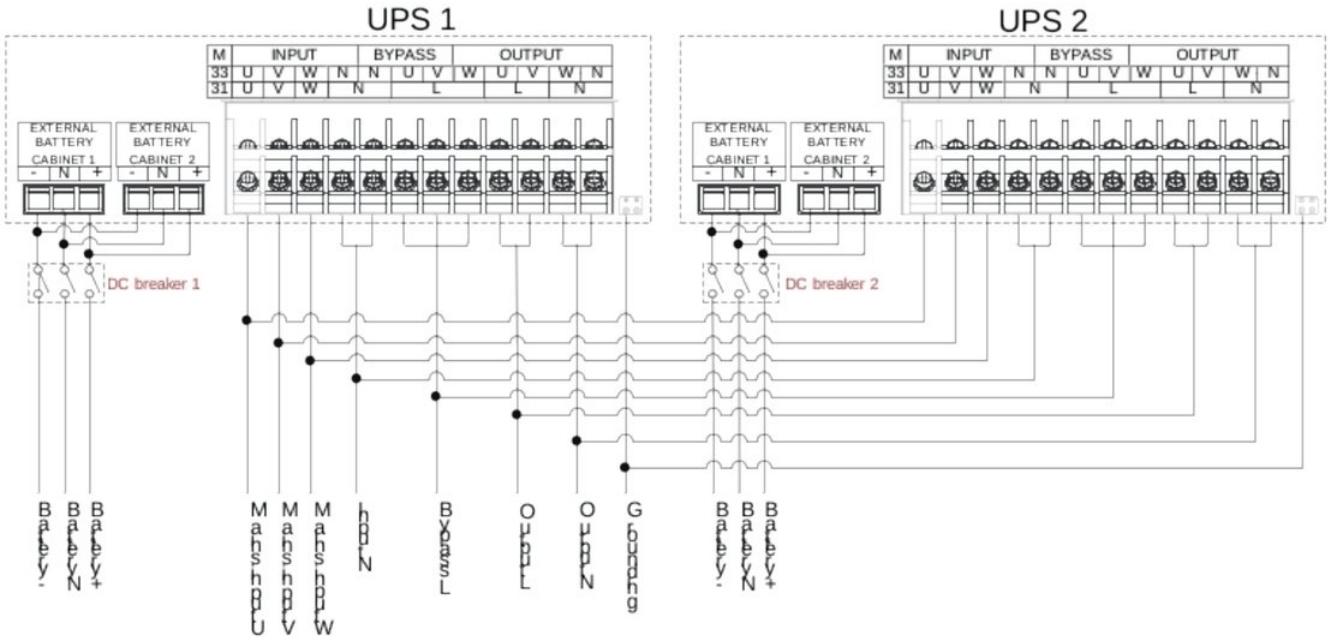

FIGURE 3-33 31 mode parallel system wiring diagram of 30K/40K UPS

3 Connect the parallel ports of all UPS units with the parallel cables, as shown in Figure 3-34 and Figure 3-35.

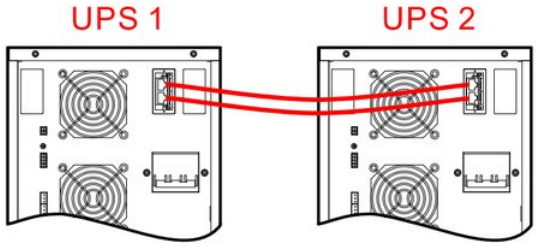

FIGURE 3-34 Double parallel wiring diagram of 10kVA

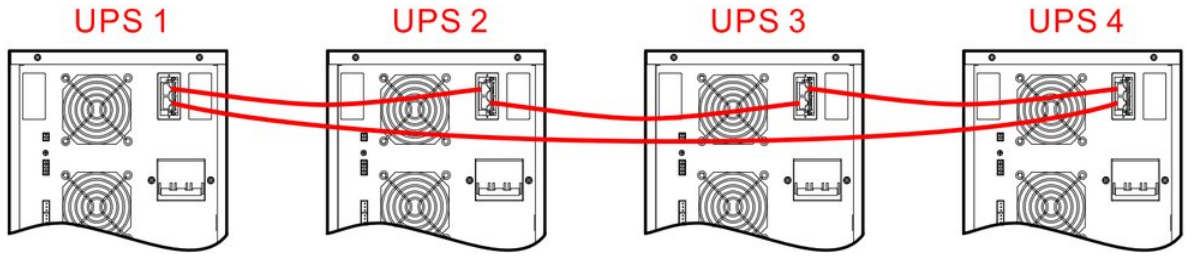

FIGURE 3-35 Four parallel wiring diagram of 10kVA

NOTE

1. The parallel wiring is the same on all 10K-40K models, but the parallel port of the 30K/40K UPS is in a different position; the figures above show the 10 kVA model. 2. When the UPS units of a parallel system share a battery pack, the battery parameters set on each UPS (capacity, number of batteries, charging voltage and charging current) must be identical. 3. Connect the parallel ports of all units with the supplied parallel cables. The two RJ45 parallel ports are identical and back each other up to increase system reliability. The UPS raises an alarm if one of them is not connected.

WARNING

1. Ensure that the parallel card of each UPS is correctly installed in the parallel system (see the installation guide of parallel card for details).
2. The wiring and phase sequence of all UPS units in the parallel system must be strictly identical, so that the bypass supplies of the parallel system are in phase.
3. The UPS units of a parallel system can share battery strings, but the number of batteries set on each UPS must be the same.

4 Set each UPS to the corresponding parallel mode (see 4.5.7 Device Configuration Page).

CHAPTER 4

04 Touch Screen Operation

On the touch screen the user can view input, output, load and battery parameters, check the UPS status and alarms, and make the related settings. The event log can also be consulted for fault diagnosis.

IN THIS CHAPTER

4.1 Menu Hierarchy
4.2 Main Page
4.3 Login Page
4.4 Information Management Page
4.5 Setting Management Page
4.6 Current Fault Page
4.7 Buzzer Control
4.8 ON/OFF Operation

NOTE

The parameters values and other details in the pictures in this chapter are for illustration only. Detailed information should be based on the touch screen of the product.

WARNING

The touch screen contains parameters that affect the operation of the device. All settings and parameter changes must be made by designated qualified personnel. If the meaning of a parameter is unclear, refer to this manual or consult AEC service. Do not change parameters without authorisation.

4.1 Menu Hierarchy

The menu hierarchy of the touch screen is as shown in Figure 4-1.

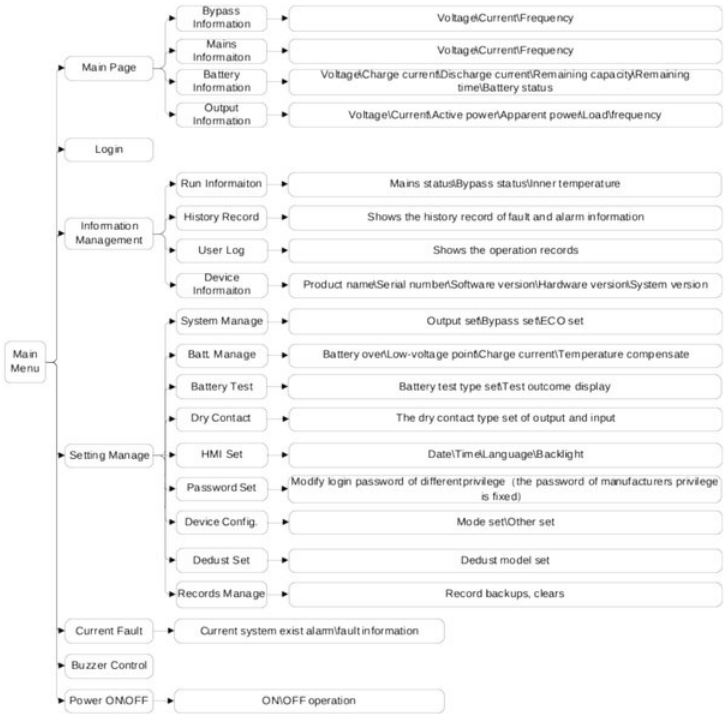

FIGURE 4-1 Menu structure of the touch screen

Keys and touch screen: quick guide

Starting and stopping use the two ON and two OFF keys of the front panel, pressed together; everything else is on the touch screen.

QUICK GUIDE Start the UPS

Section 5.2

1. **Breakers** — Close the mains, bypass and battery breakers
2. **Screen on** — Wait for the touch screen to light up
3. **ON + ON** (1 s) — Press both ON keys together
4. **Loads** — After about 10 s, switch on the loads, largest first

QUICK GUIDE Shut down the UPS

Section 5.3

1. **Loads off** — Switch off the loads; let the UPS run 10 min without load
2. **OFF + OFF** (1 s) — Press both OFF keys together
3. **Breakers** — Open the battery, bypass and mains breakers

QUICK GUIDE Start from the battery (no mains)

1. **BATT. Start** (7 s) — Press and hold the battery start key
2. **ON + ON** — Press both ON keys together until a beep

QUICK GUIDE Log in and change a setting

Section 4.3 / 4.5

1. **Login** — Main page: tap the login icon
2. **Password** — Enter the password; only then can settings be changed
3. **Settings** — Tap the setting icon and open the page
4. **Save** — Change the value and tap Save: a check mark confirms it

QUICK GUIDE Mute the buzzer

Section 4.7

1. **Buzzer** — Tap the buzzer icon to mute or unmute

> A continuous (long) beep cannot be muted.

4.2 Main Page

After power-on the touch screen initialises and then shows the system monitoring main page, as shown in Figure 4-2.

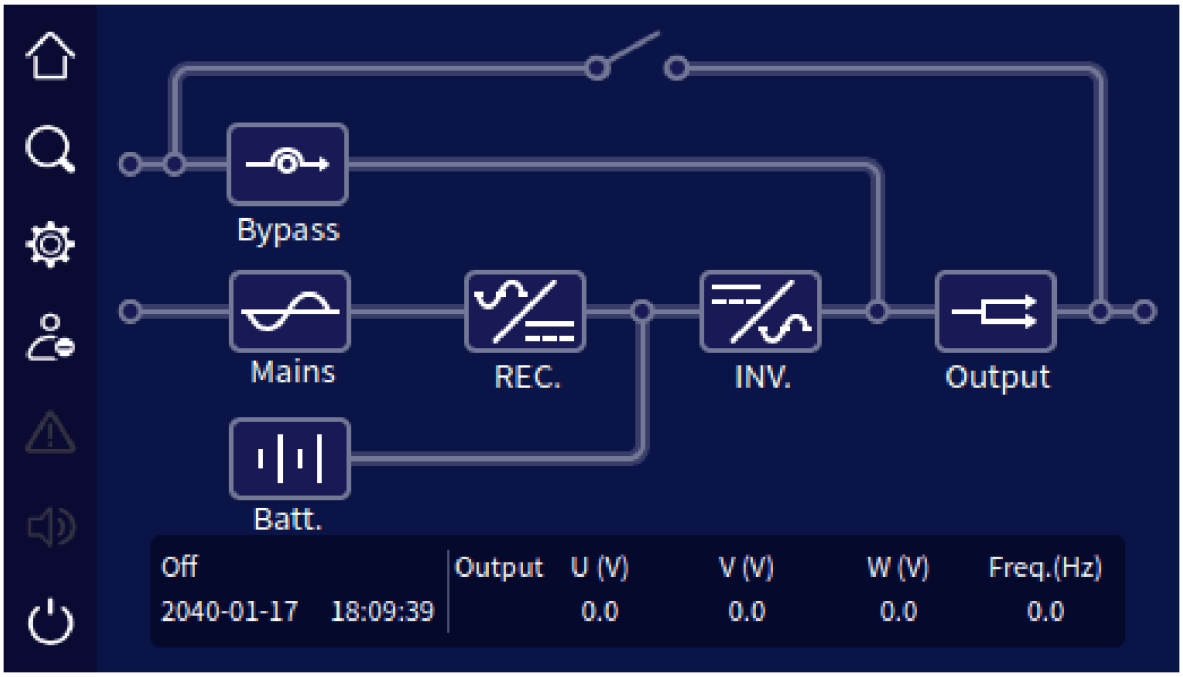

FIGURE 4-2 Main page

4.2.1 Icon Meaning

The main page shows the UPS topology. The icons mean:

: Homepage. Click this icon on any page to return to the main page.

: Information management. Click this icon to open the information management page.

: Setting management. Click this icon to open the setting management page.

: Current fault information. If there is a fault, click this icon to view the fault information.

: Buzzer. Click the icon to control the buzzer.

: Login.

: ON/OFF.

: Bypass information. When bypass is abnormal, the icon lights up in red.

: Mains information. When mains is abnormal, the icon lights up in red.

: Battery information. When battery is abnormal, the icon lights up in red.

: Output information. When output is abnormal, the icon lights up in red.

4.2.2 Working Status

There are six main working statuses: without energy transmission status, mains inverting status, battery inverting status, bypass output status, ECO output and maintenance bypass output status. The corresponding animated power-flow lines on the main page are shown in Figure 4-3 to Figure 4-8. Other statuses are also shown by the corresponding indicators.

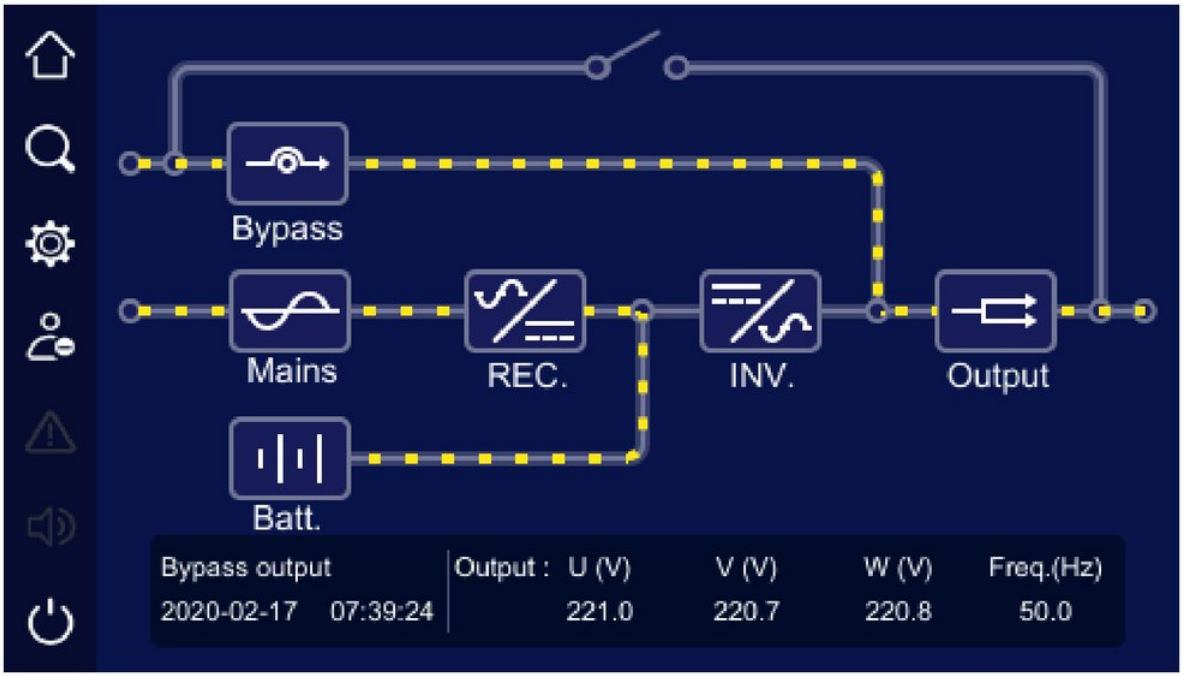

FIGURE 4-3 Without energy transmission status

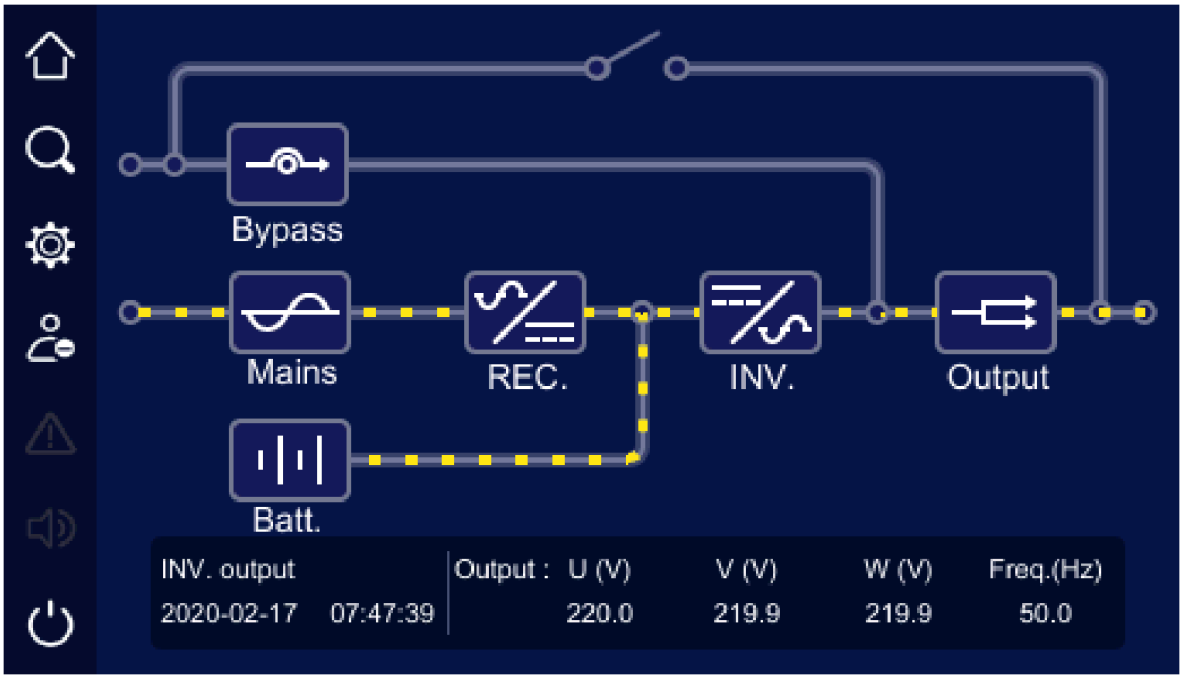

FIGURE 4-4 Mains normal, mains inverting status

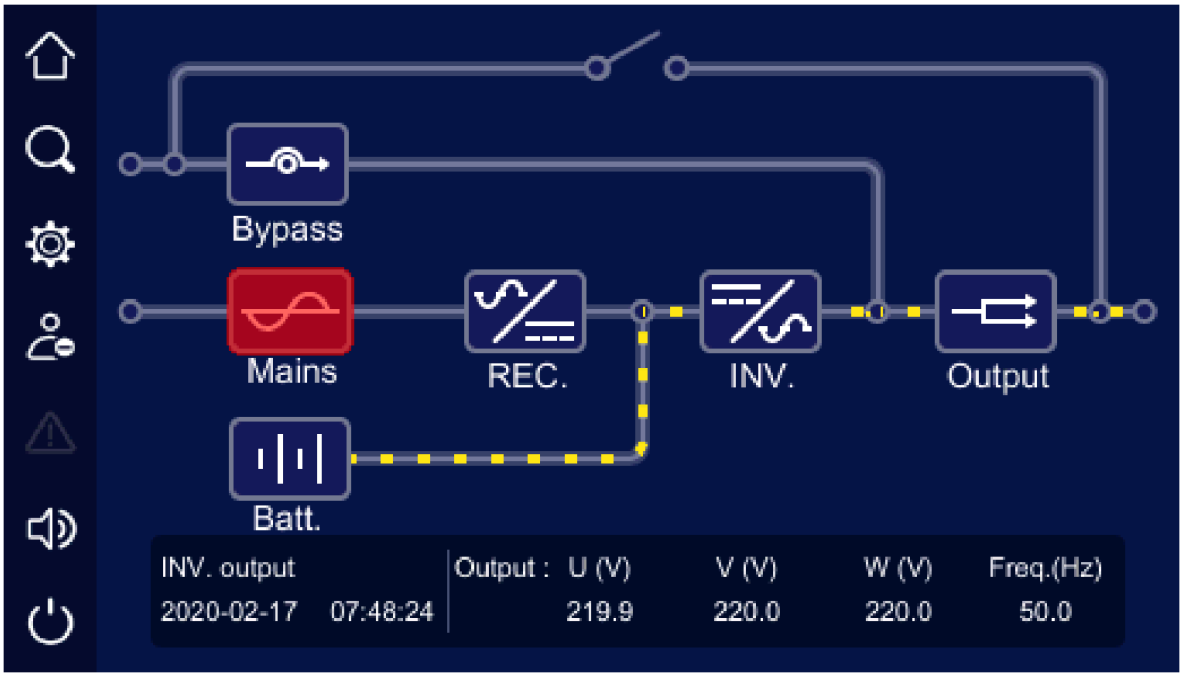

FIGURE 4-5 Mains abnormal, battery inverting status

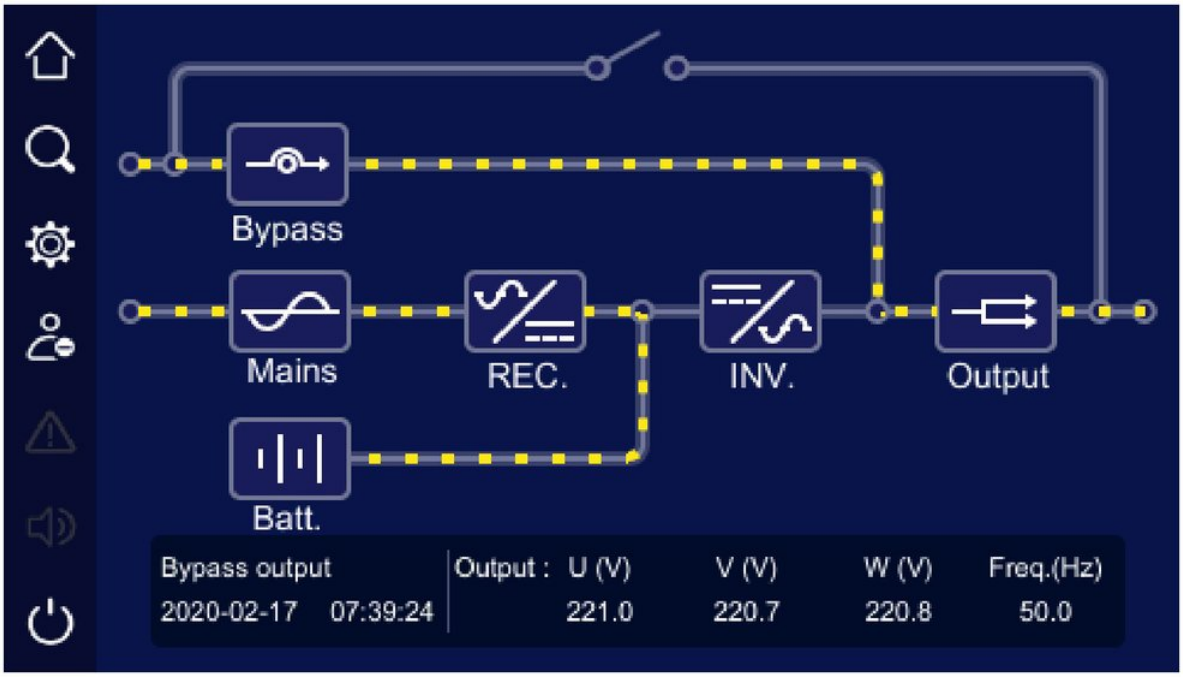

FIGURE 4-6 Bypass output status

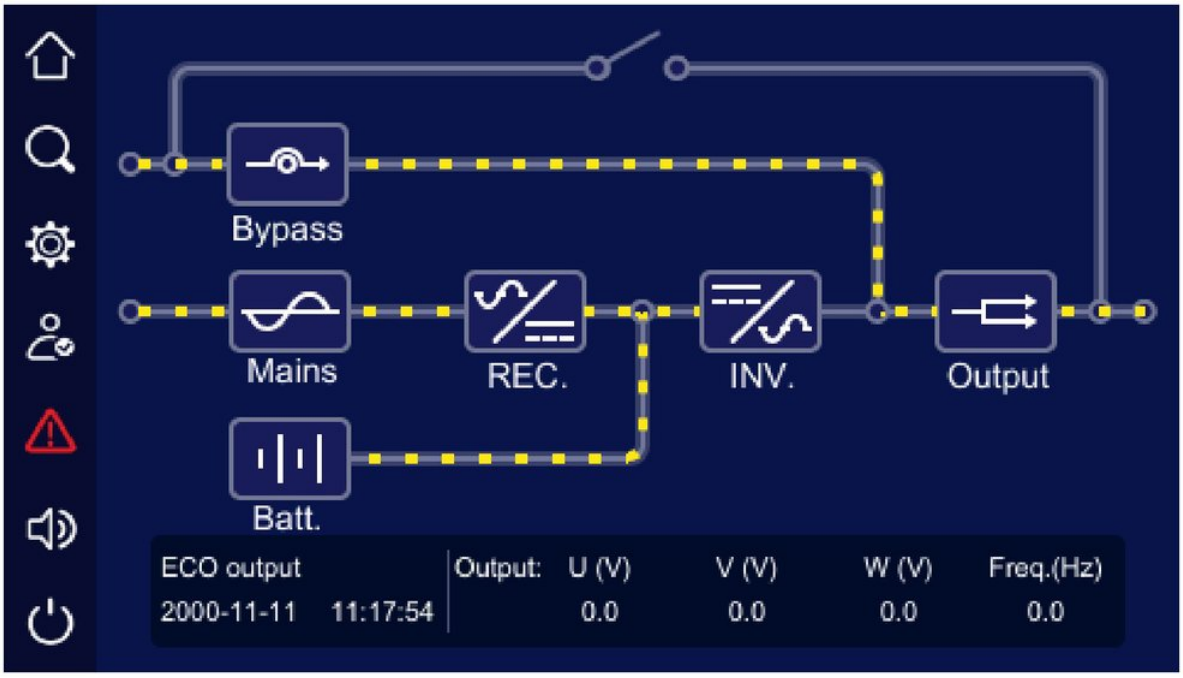

FIGURE 4-7 ECO status

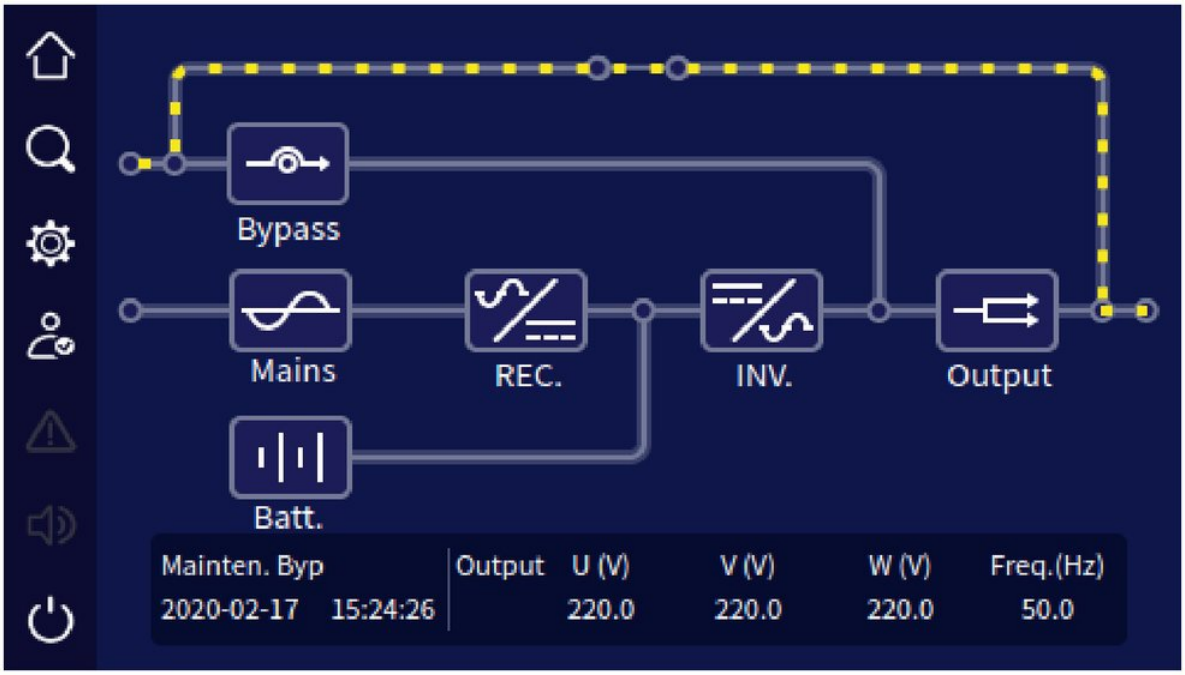

FIGURE 4-8 Maintenance bypass output status

4.2.3 Bypass Information Page

On the main page, click the  icon to open the bypass information page, as shown in Figure 4-9.

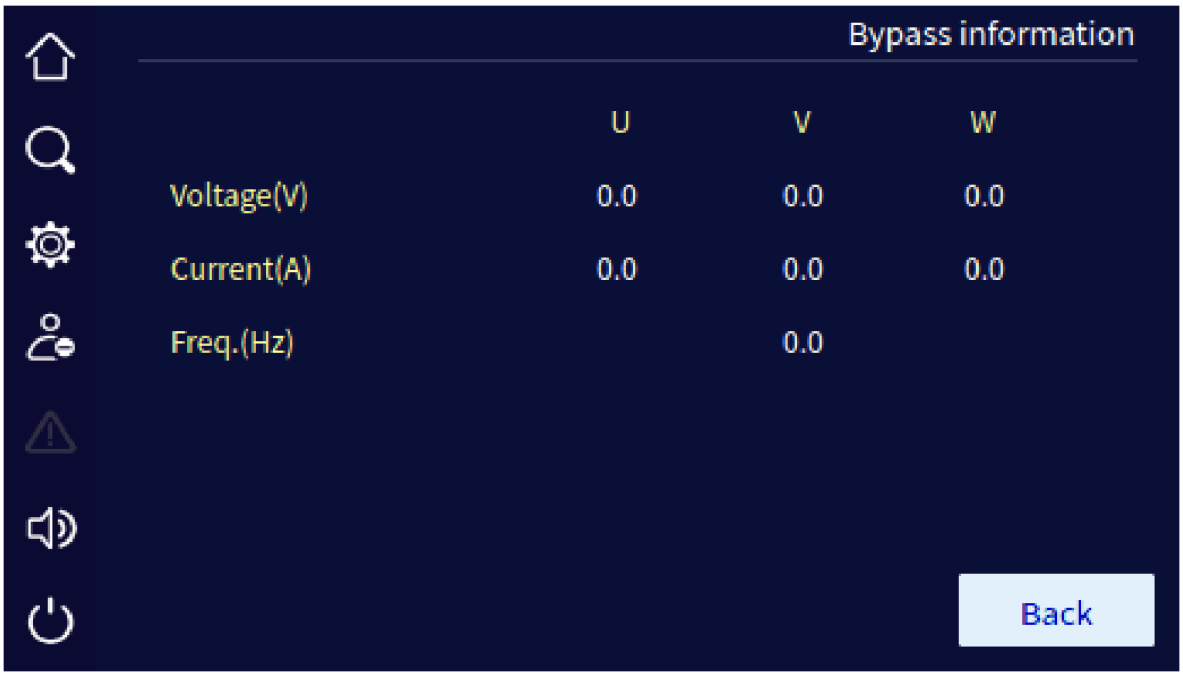

FIGURE 4-9 Bypass information page

4.2.4 Mains Information Page

On the main page, click the  icon to open the mains information page, as shown in Figure 4-10.

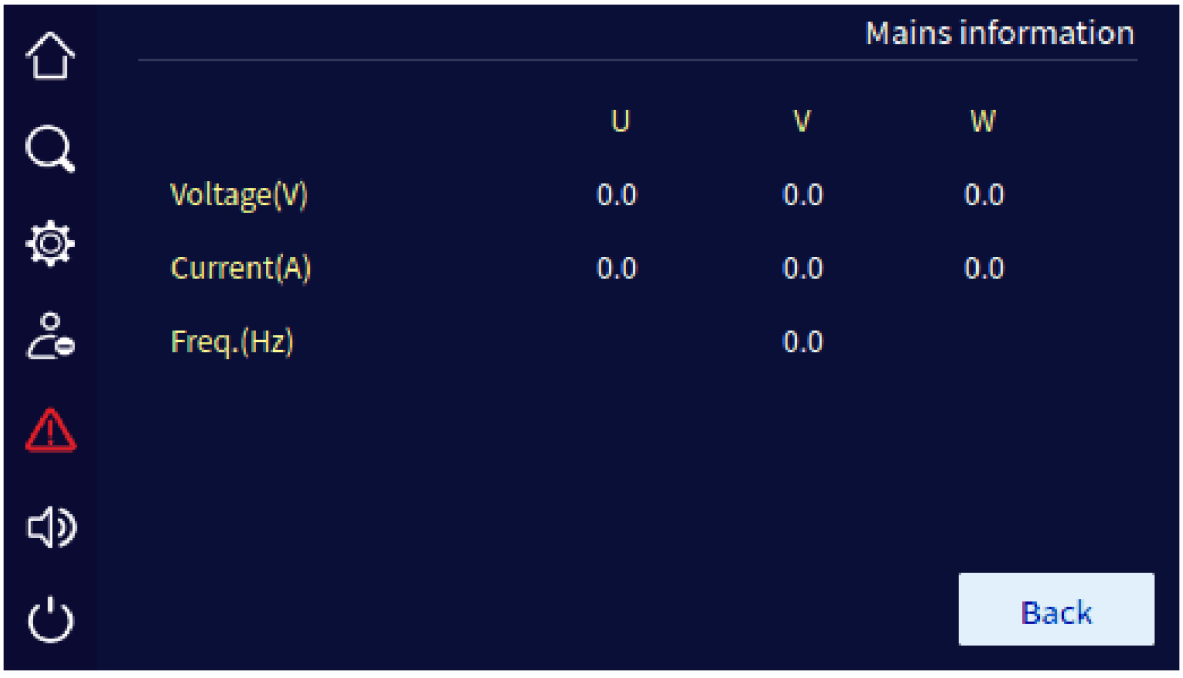

FIGURE 4-10 Mains information page

4.2.5 Battery Information Page

On the main page, click the icon to open the battery information page. During discharge it shows the discharge current; during equalizing or float charging it shows the charge current. The battery status shows the current battery status: discharge, equalized charge, floating charge. The page also shows the remaining battery capacity and remaining time, etc. as shown in Figure 4-11.

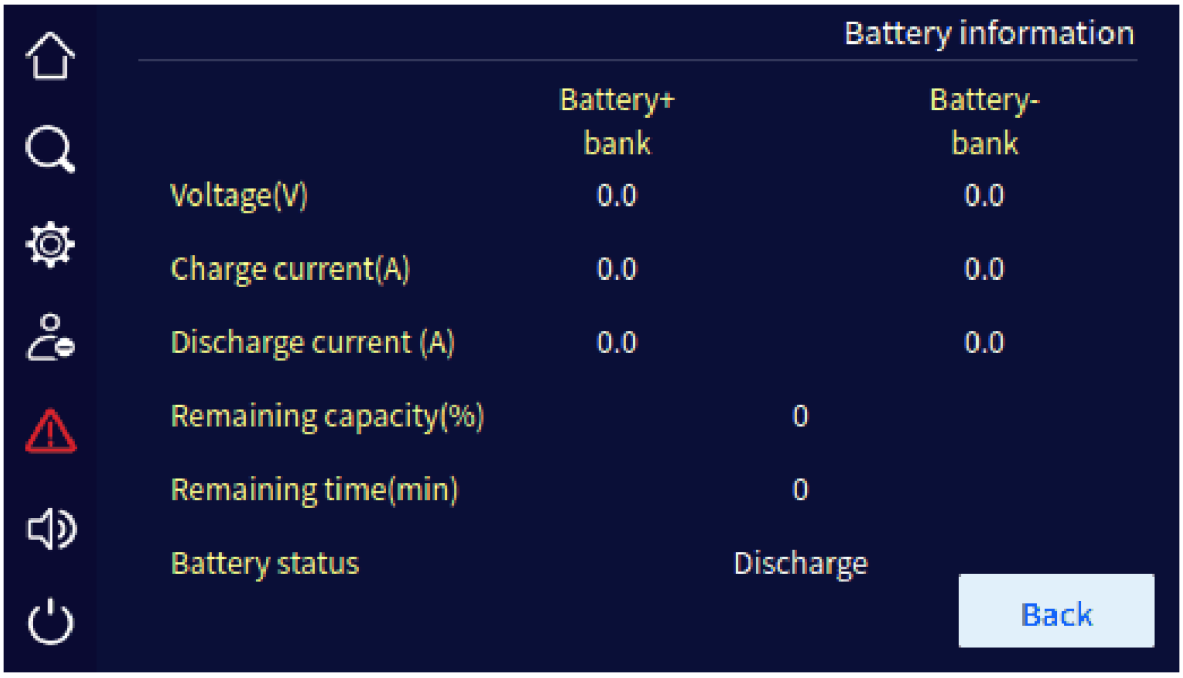

FIGURE 4-11 Battery information page

4.2.6 Output Information Page

On the main page, click the icon to open the output information page. The page shows the output voltage, current, load, active power, apparent power, power factor, output frequency, etc. as shown in Figure 4-12.

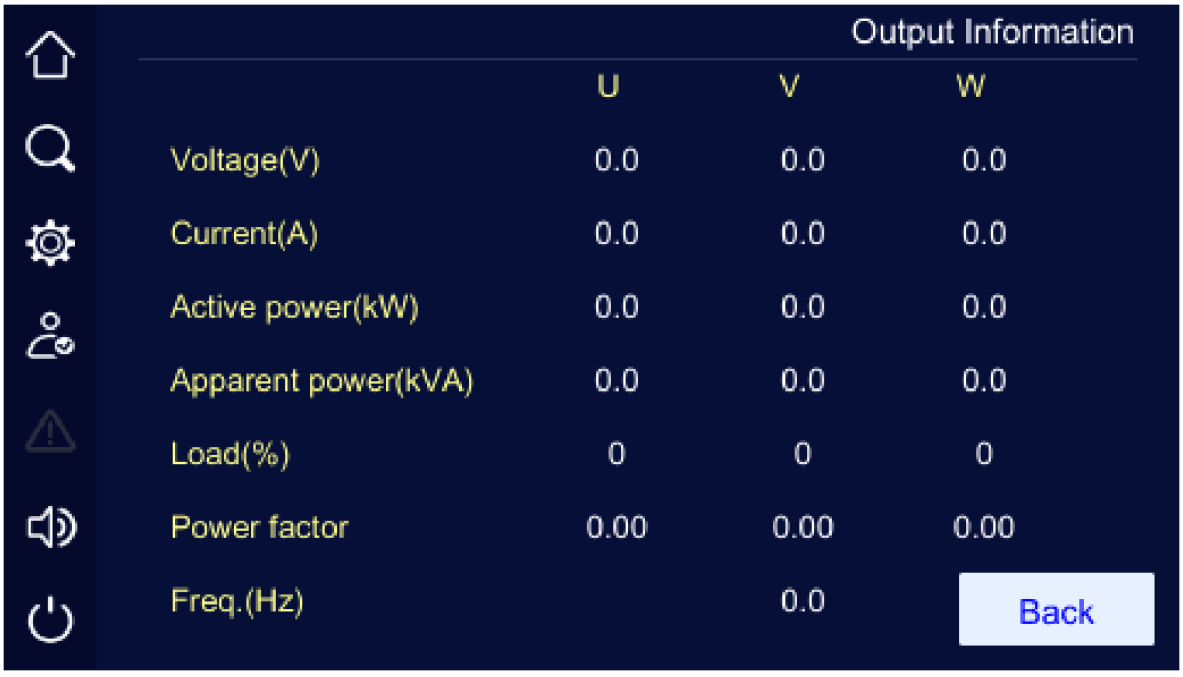

FIGURE 4-12 Output information page

4.3 Login Page

On the main page, click the icon to open the login page, as shown in Figure 4-13. Settings can be changed only after login.

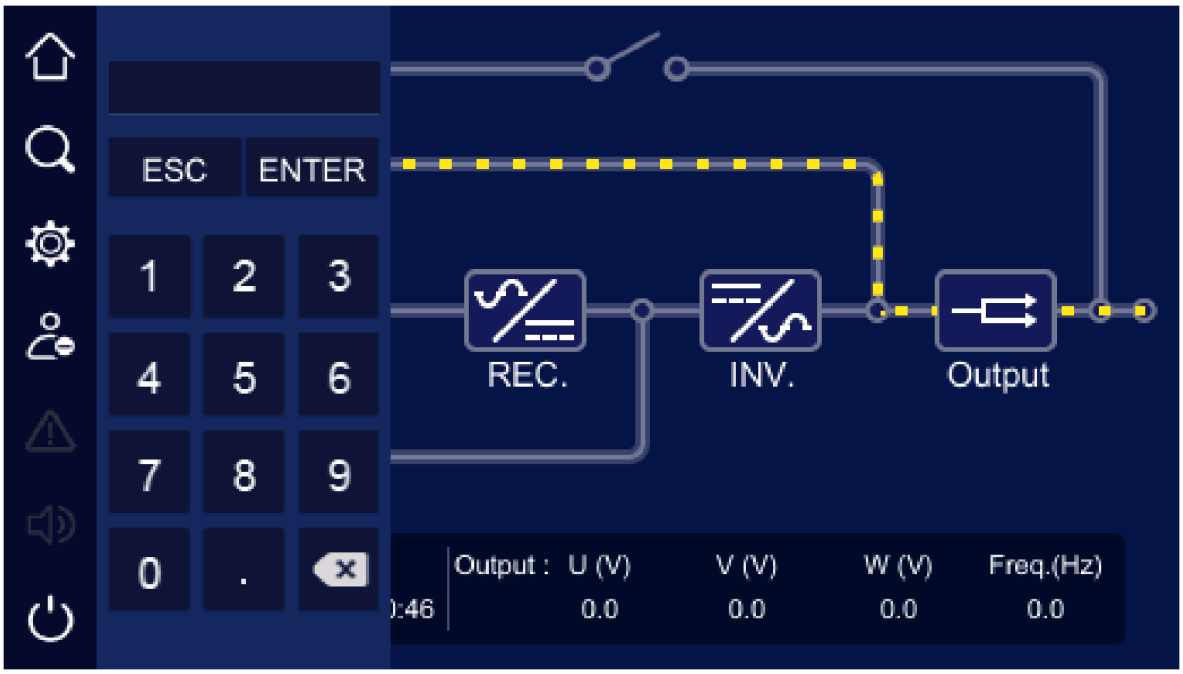

FIGURE 4-13 Login page

> **NOTE**
> The password for common user is 111; the administrator password is provided by AEC technical service. Common user can check the parameters only, administrator can check and set the UPS parameters.

4.4 Information Management Page

On the main page, click the icon to open the information management page, as shown in Figure 4-14. The page includes run info, history record, user log and device information (icon "device config.").

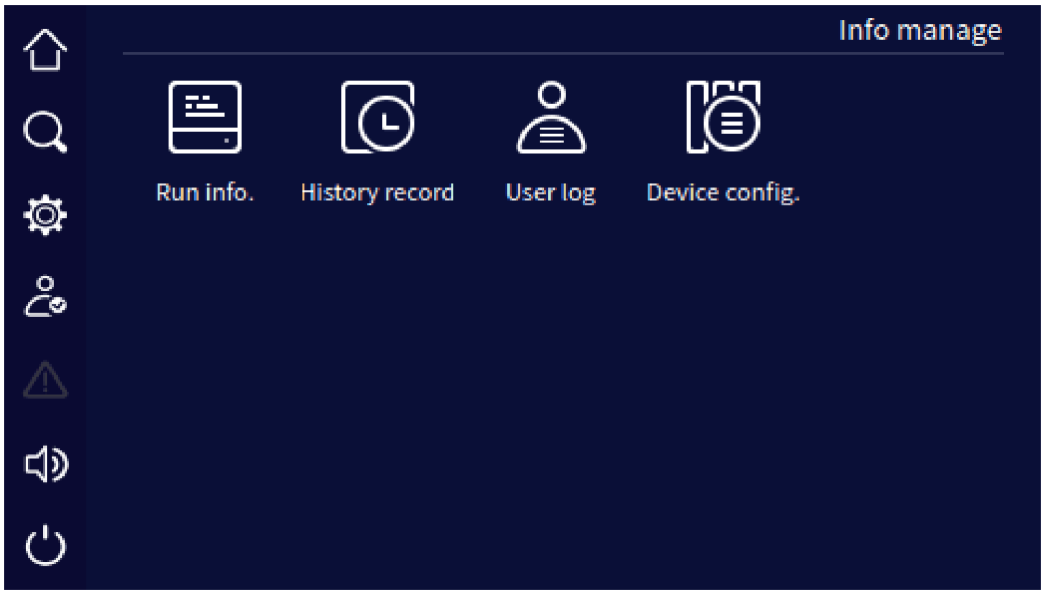

FIGURE 4-14 Information management page

4.4.1 Run Information Page

On the information management page, click the "run info." icon to open the run information page, as shown in Figure 4-15 to Figure 4-18. The page shows the UPS current status, including mains status, bypass status, battery status, output status, load status, rectifier status, inverter status, work mode, input loop, bypass loop, battery loop, fan status, inner temperature.

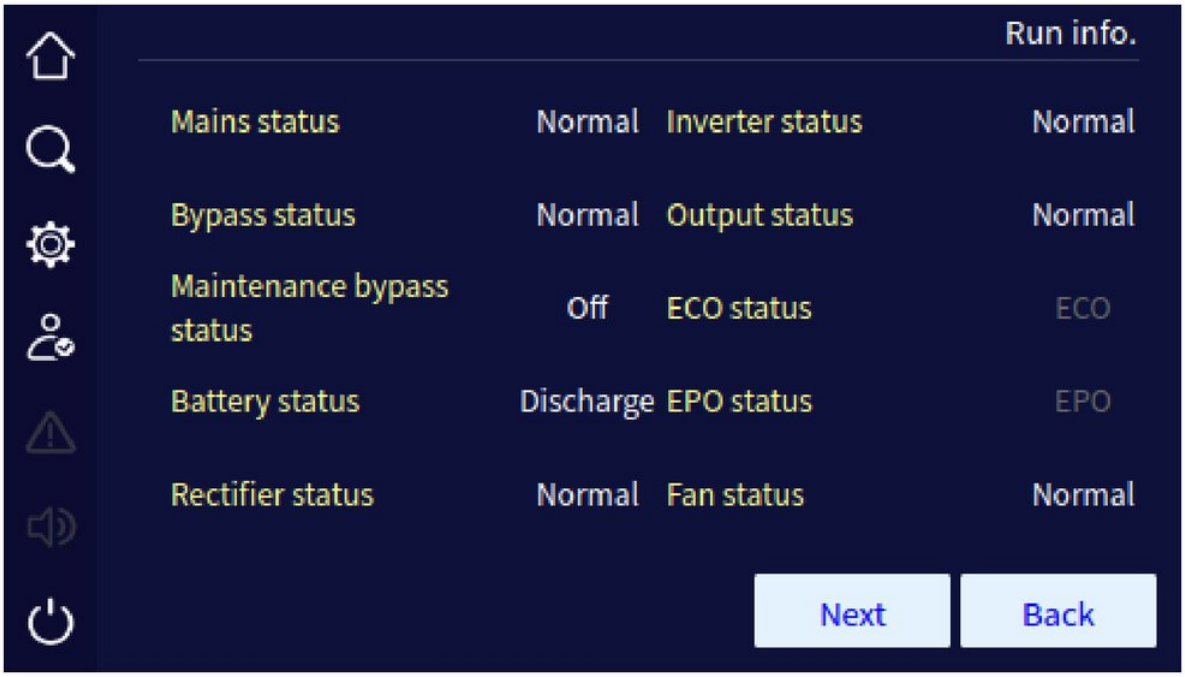

FIGURE 4-15 Run info page 1 (single UPS)

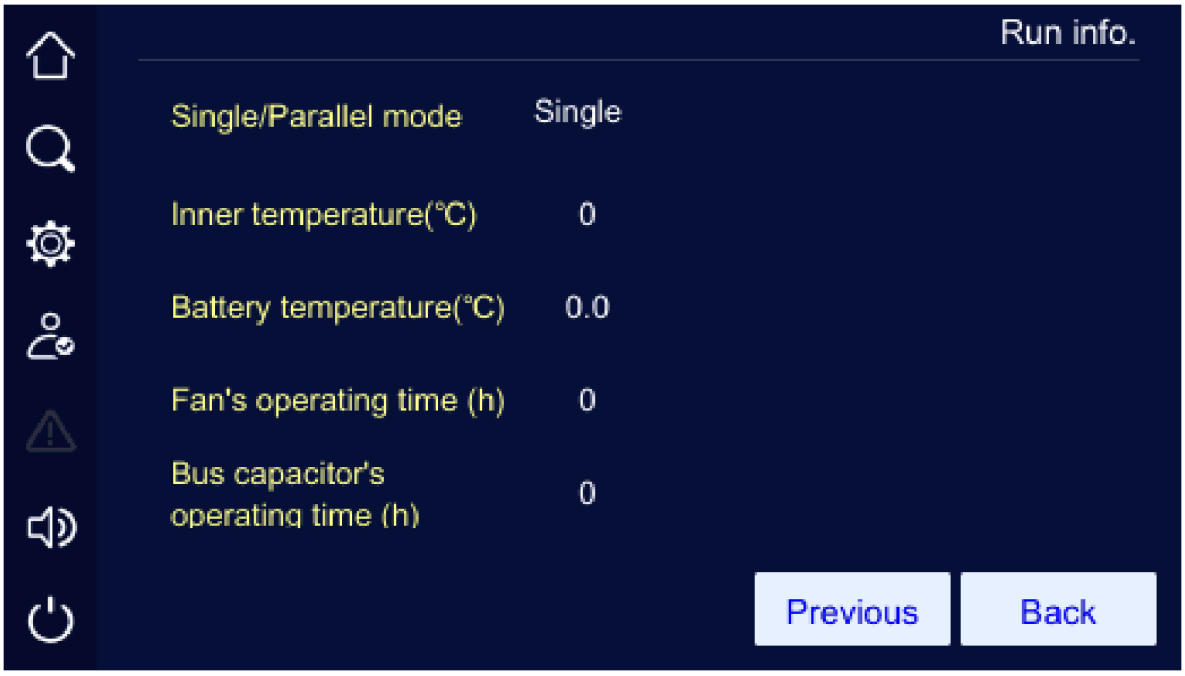

FIGURE 4-16 Working status page 2 (single UPS)

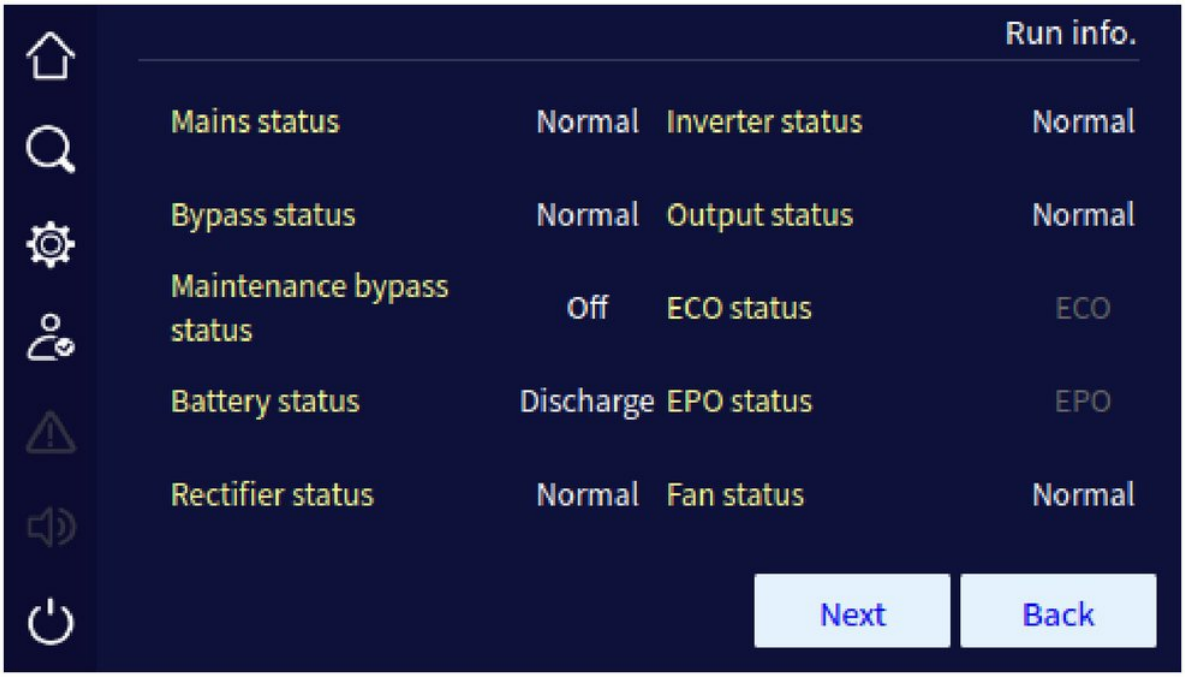

FIGURE 4-17 Working status page 1 (parallel UPS)

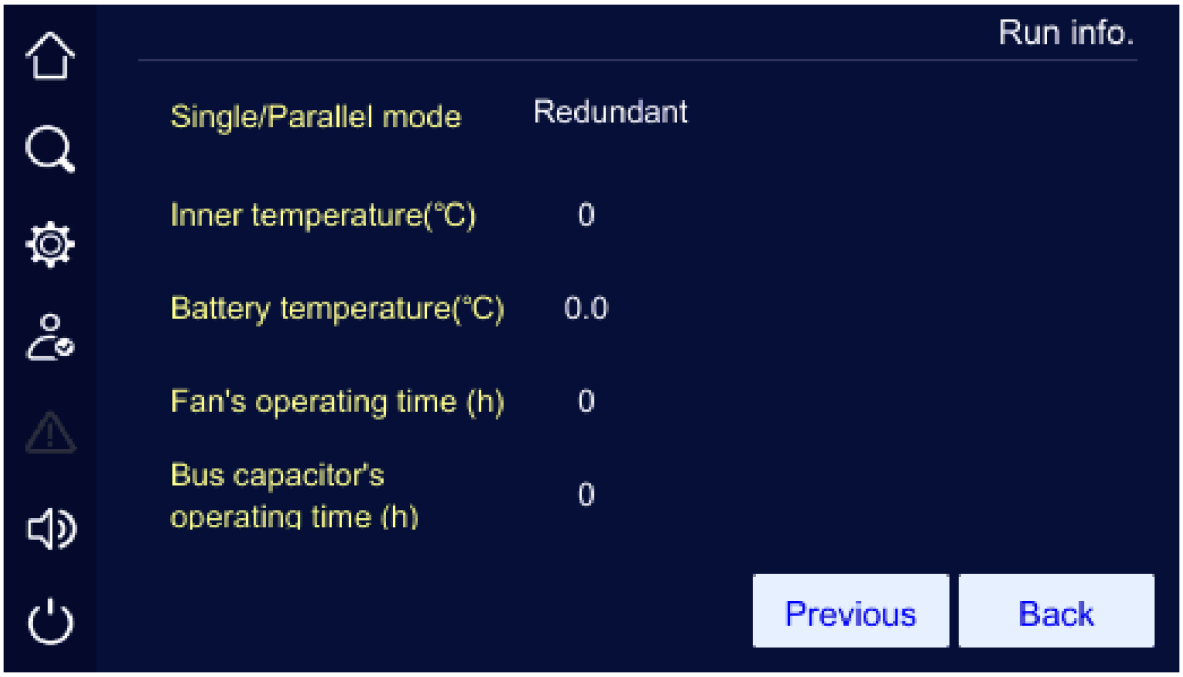

FIGURE 4-18 Working status page 2 (parallel UPS)

4.4.2 History Record Page

On the information management page, click the "history record" icon to open the history record page, as shown in Figure 4-19. The page shows the fault and alarm information, and they are listed on the basis of time. The first record is the latest fault.

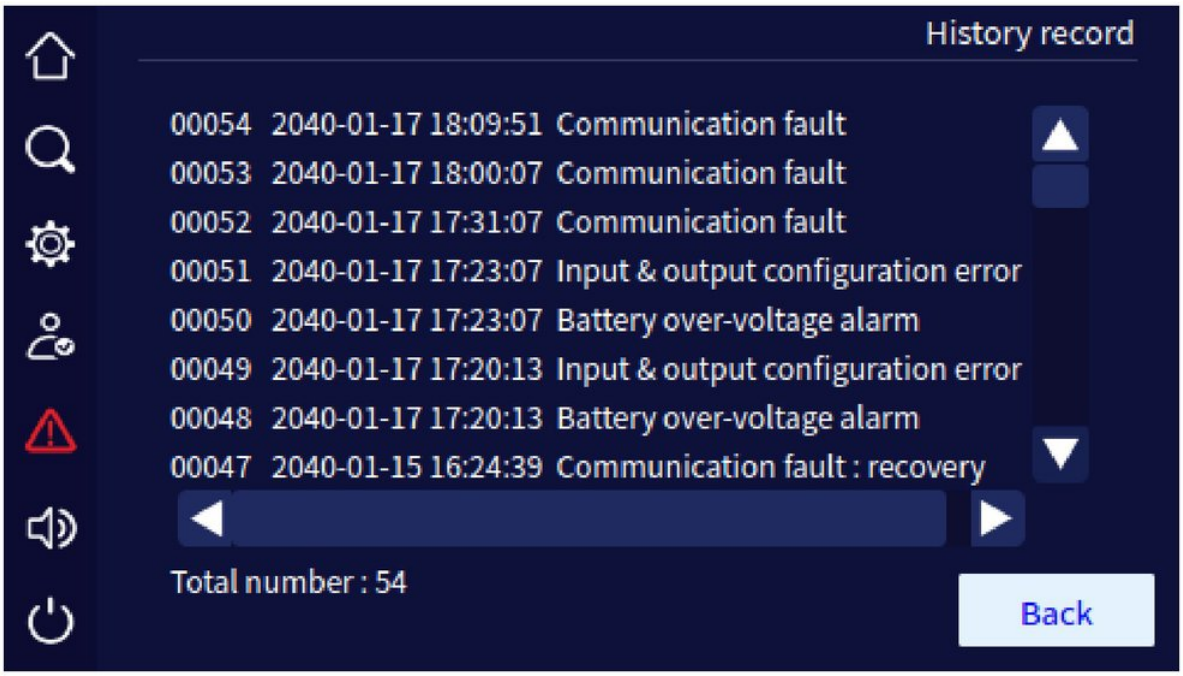

FIGURE 4-19 Event log page

4.4.3 User Log Page

On the information management page, click the "user log" icon to open the user log page, as shown in Figure 4-20. The page shows the operation records, such as ON/OFF operation, mains voltage range setting, bypass voltage setting, etc. The user log is listed on the basis of time. The first record is the latest operation record.

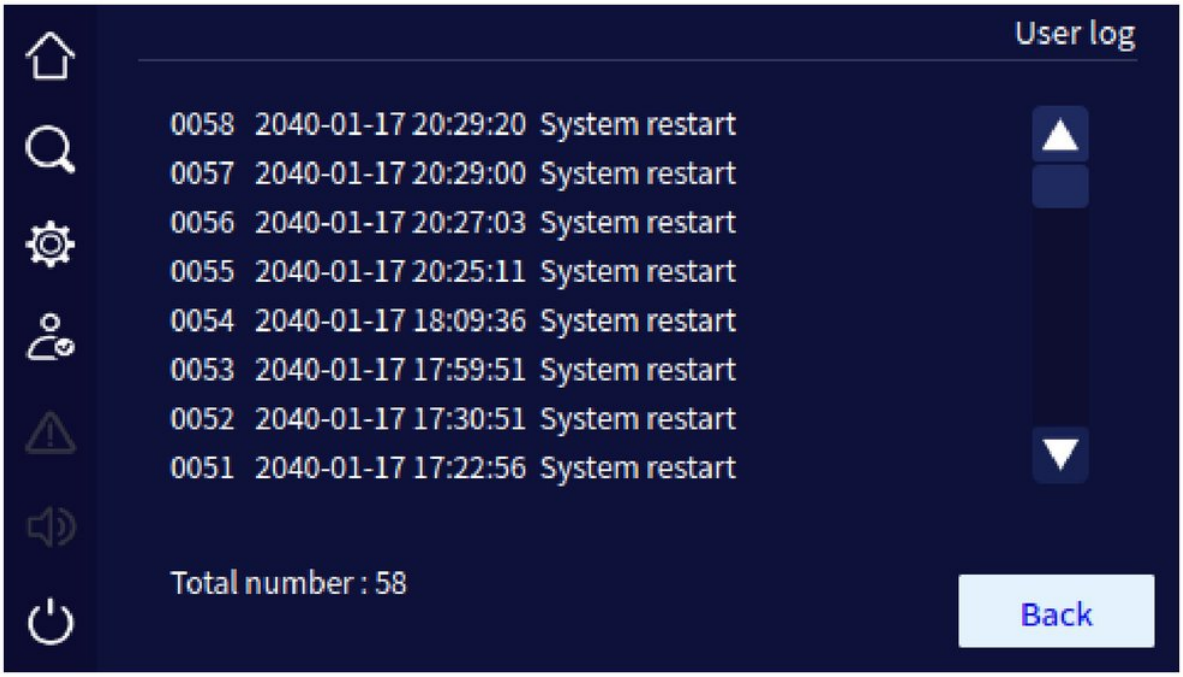

FIGURE 4-20 User log page

4.4.4 Device Information Page

In the information management page, click the "device config." icon to enter the device information page, as shown in Figure 4-21 and Figure 4-22. Device information page includes product name and model, version information includes serial number, rectifier version, inverter version, system version, protocol version and HMI software version, etc.

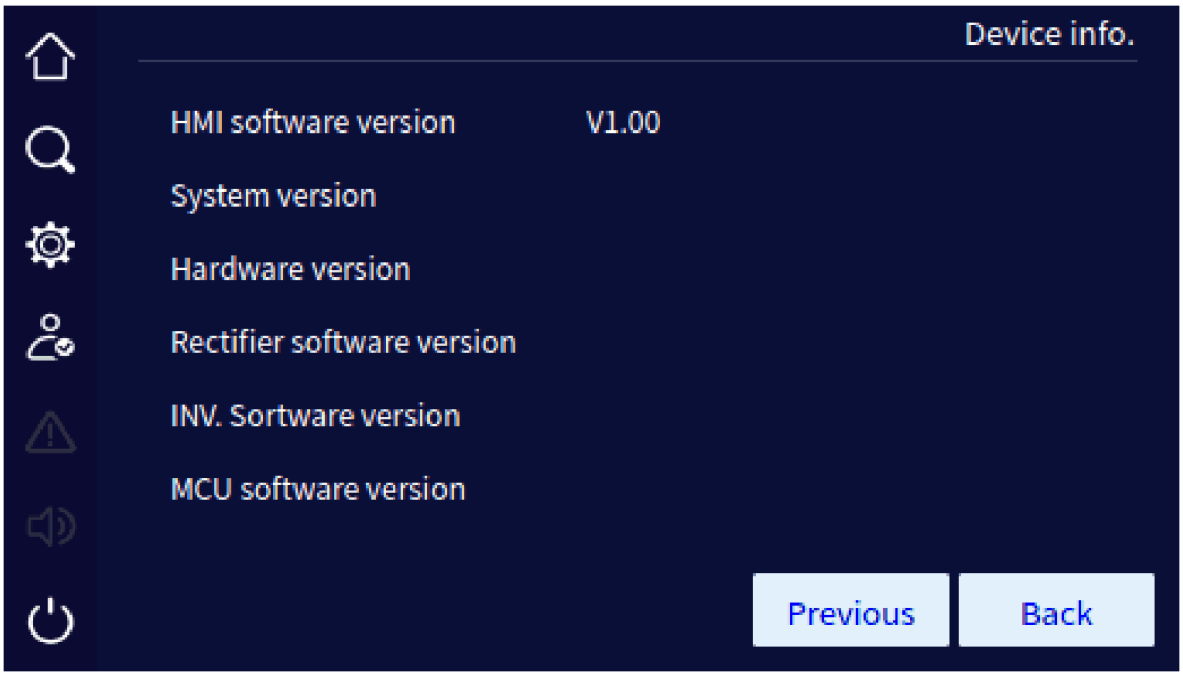

FIGURE 4-21 Device information page 1

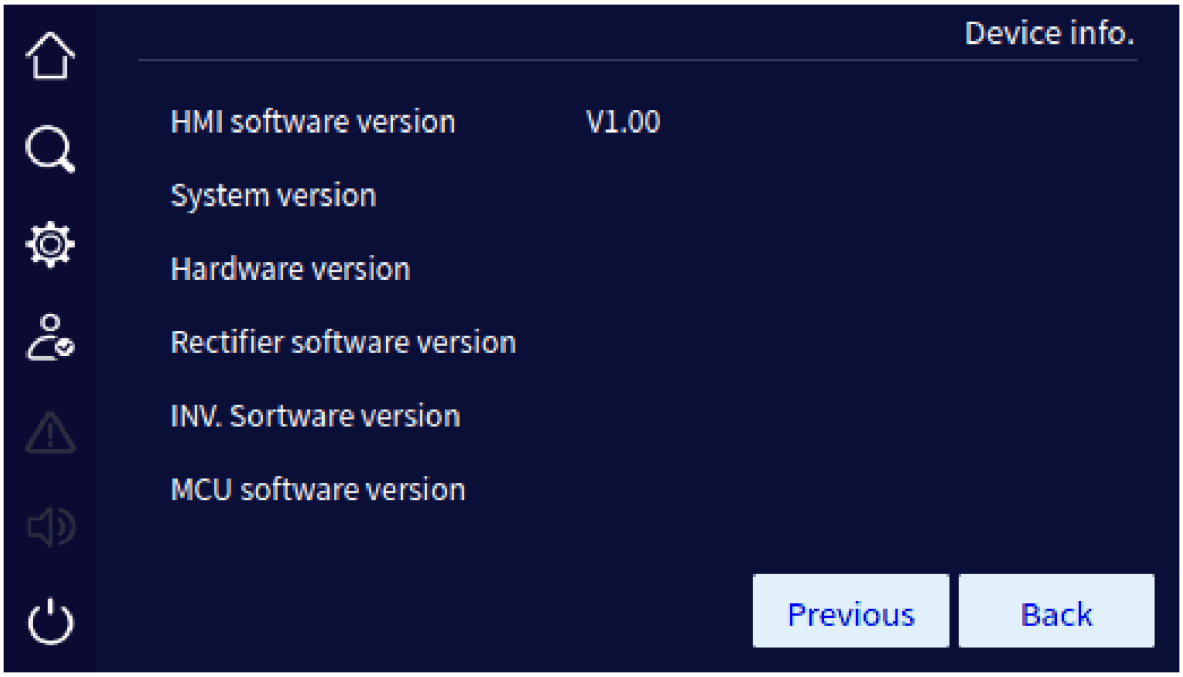

FIGURE 4-22 Device information page 2

4.5 Setting Management Page

On the main page, after login, click the icon to open the setting management page, as shown in Figure 4-23. The page includes: system management, battery management, battery test, dry contact, HMI (screen) setting, password setting, device configuration, dedust setting and record management.

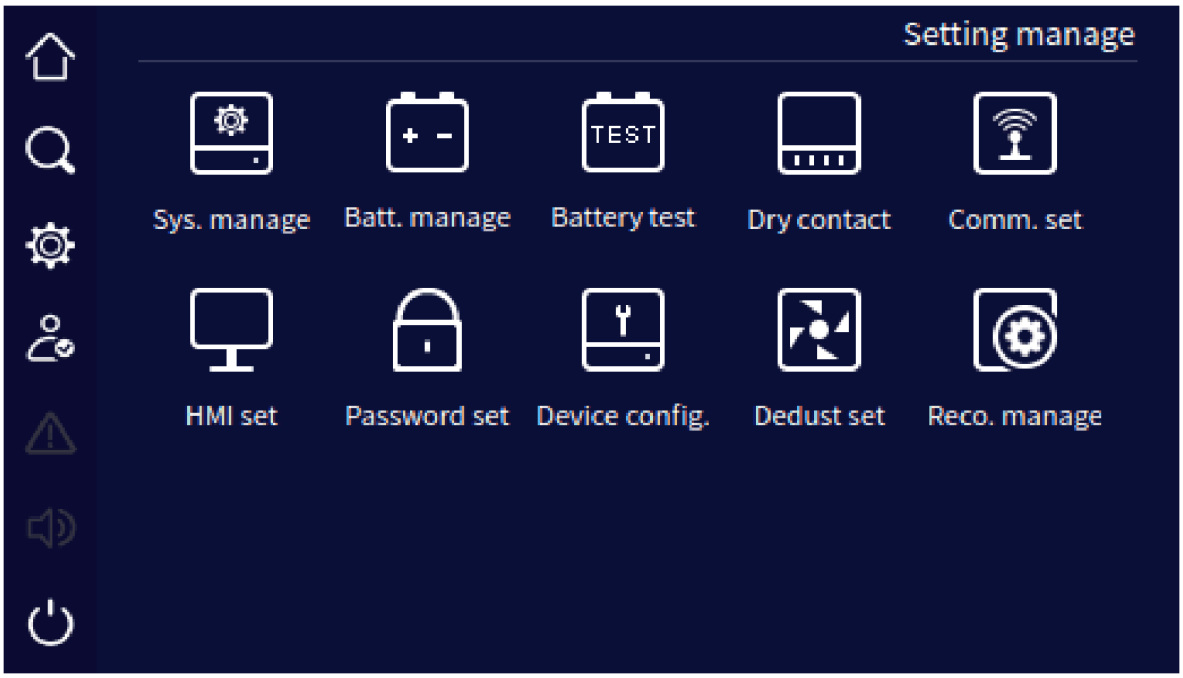

FIGURE 4-23 Setting management page

4.5.1 System Management Page

In the system management page, the user can set the output voltage, output frequency and output voltage adjustment, the bypass voltage and frequency range, ECO mode and the ECO voltage and frequency range, as shown in Figure 4-24 to Figure 4-26.

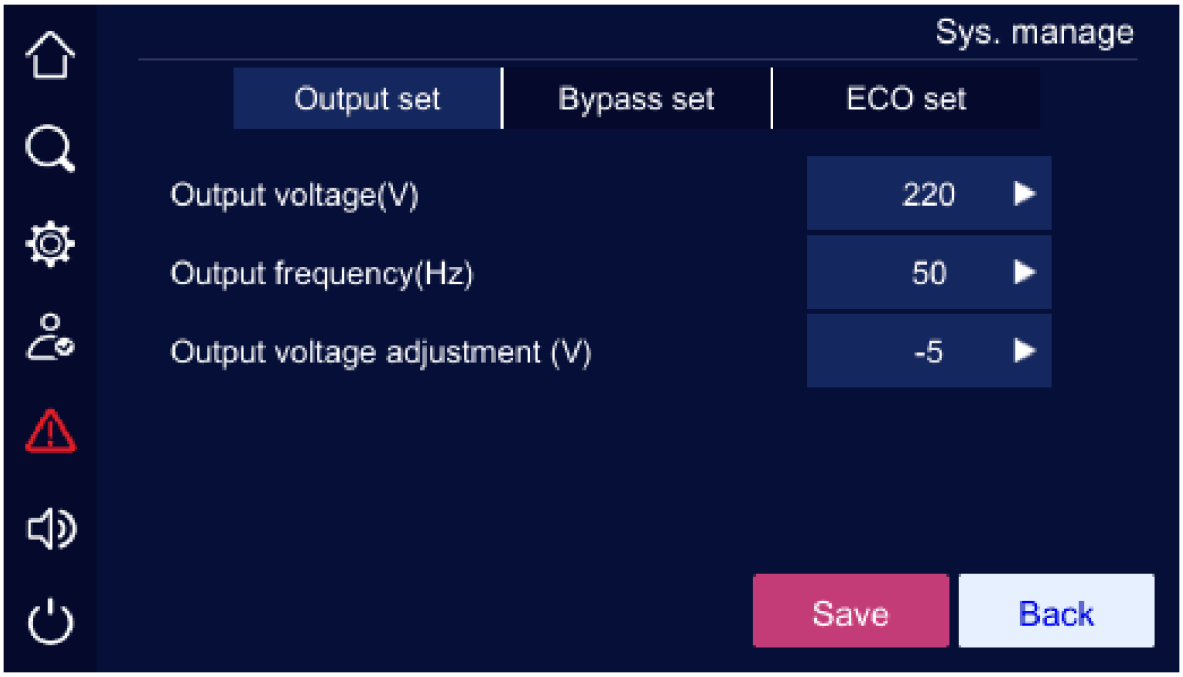

FIGURE 4-24 System manage page 1 of output set

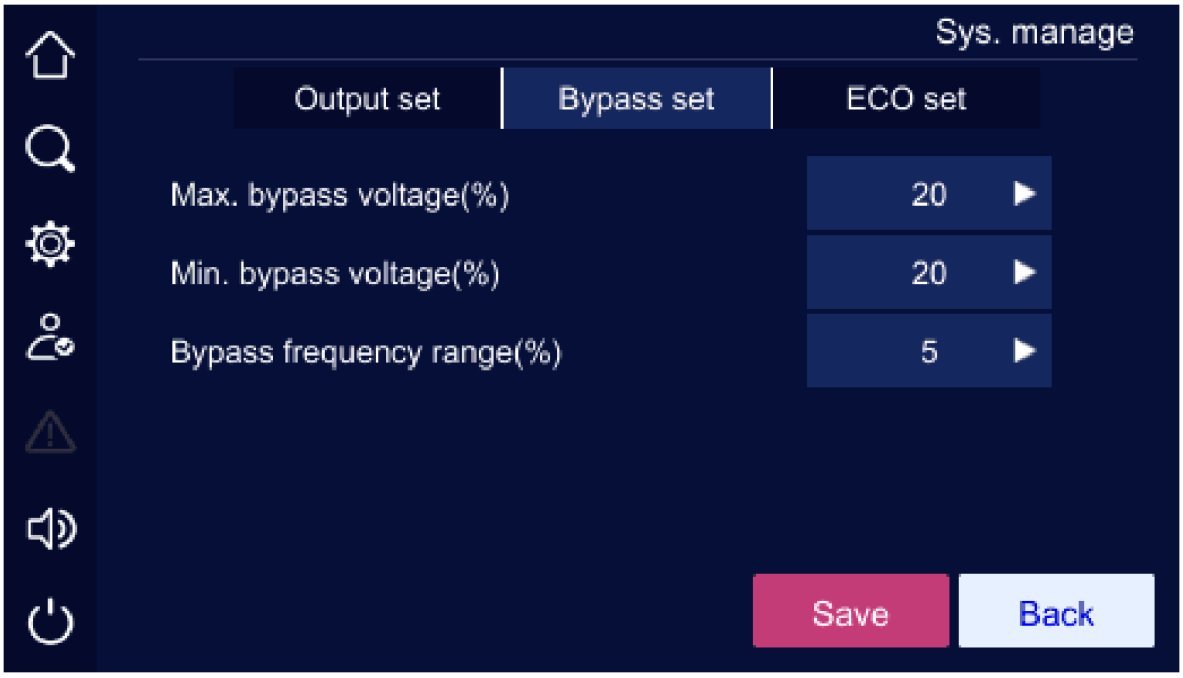

FIGURE 4-25 System manage page 2 of bypass set

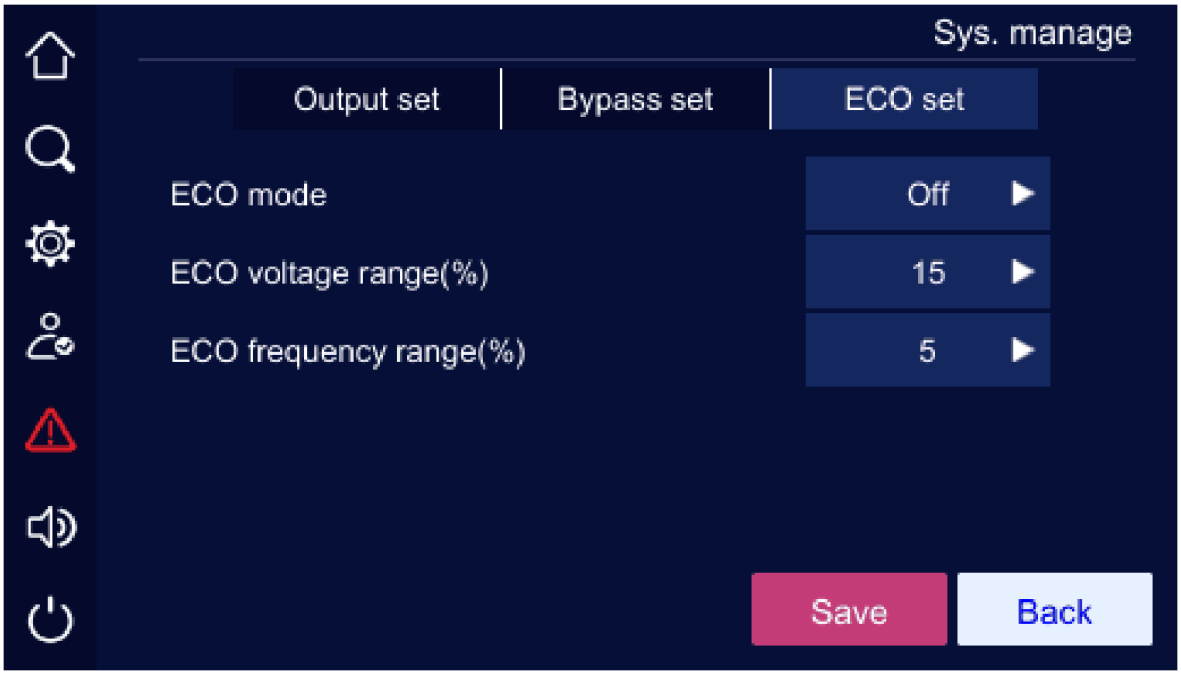

FIGURE 4-26 System management page 3 of ECO set

TABLE 4-1 Setting description for system management page

Item	Settable value
Output voltage (V)	220V, 230V, 240V
Output frequency (Hz)	50Hz, 60Hz
Output voltage adjustment (V)	-5~ +5
Max. bypass voltage (%)	10%, 15%, 20%
Min. bypass voltage (%)	10%, 15%, 20%
Bypass frequency range (%)	5%, 10%
ECO mode	On, Off
ECO voltage range (%)	10%, 15%
ECO frequency range (%)	5%, 10%

After changing a parameter, click the Save button to save it. If the setting is saved, a ✓ icon appears to the right of the parameter (Figure 4-27); if it fails, a ✗ icon appears there (Figure 4-28).

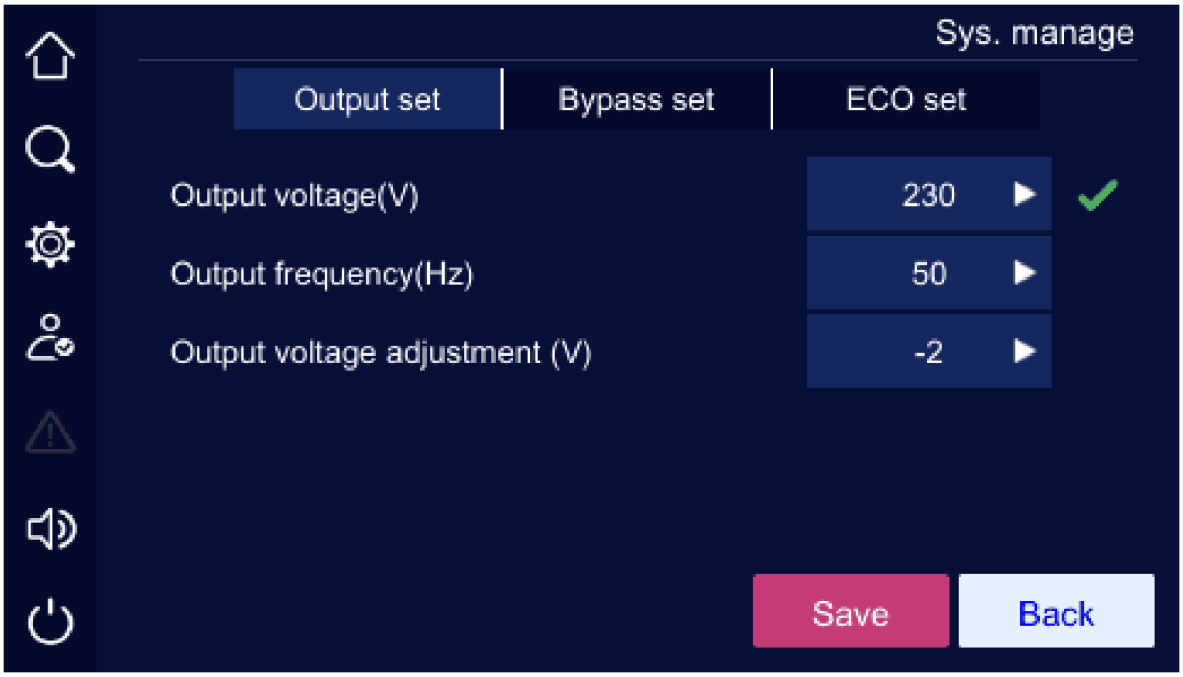

FIGURE 4-27 Successful setting

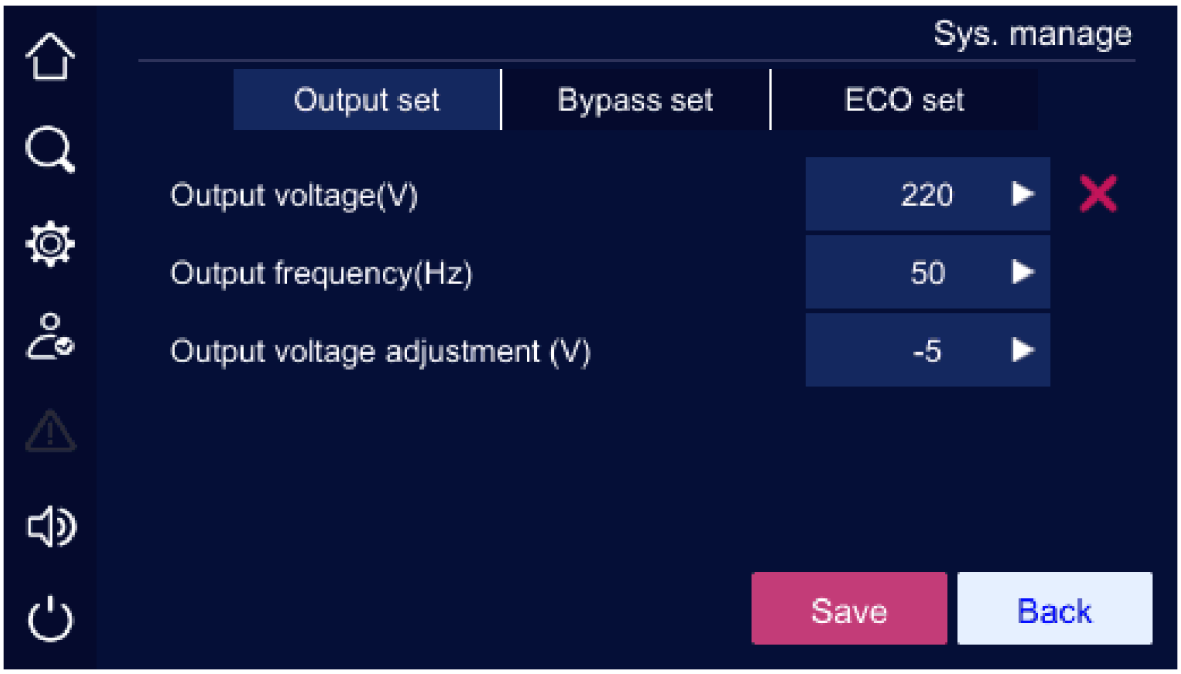

FIGURE 4-28 Unsuccessful setting

4.5.2 Battery Management Page

The battery management page includes equalizing charge voltage, floating charge voltage, charge current, battery test ending voltage, low-voltage warning, low-voltage protection, temperature compensation coefficient, force equalizing charge. The battery management page is shown in Figure 4-29 to Figure 4-32.

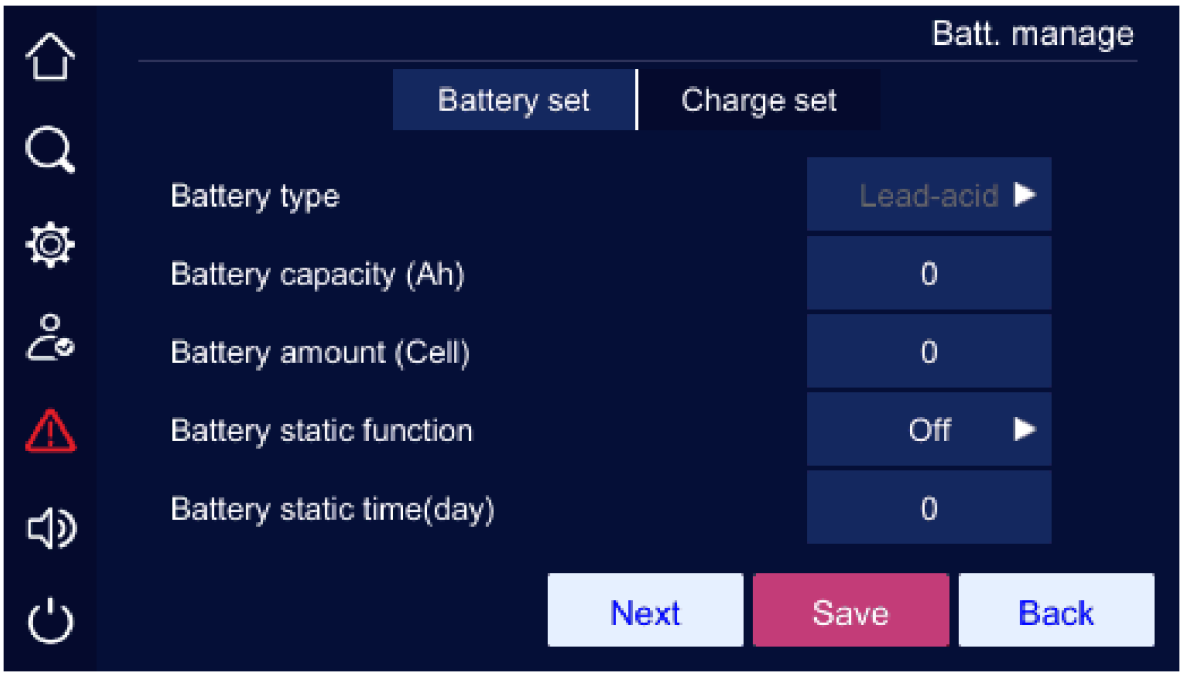

FIGURE 4-29 Battery set page 1 of battery management

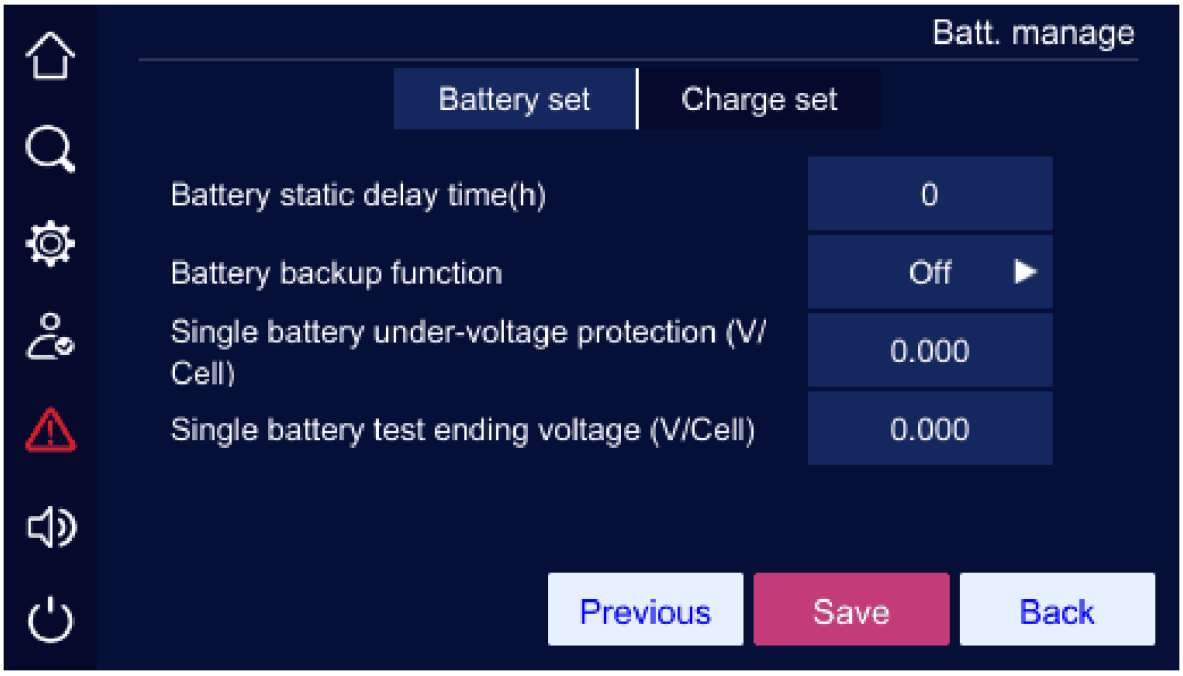

FIGURE 4-30 Battery set page 2 of battery management

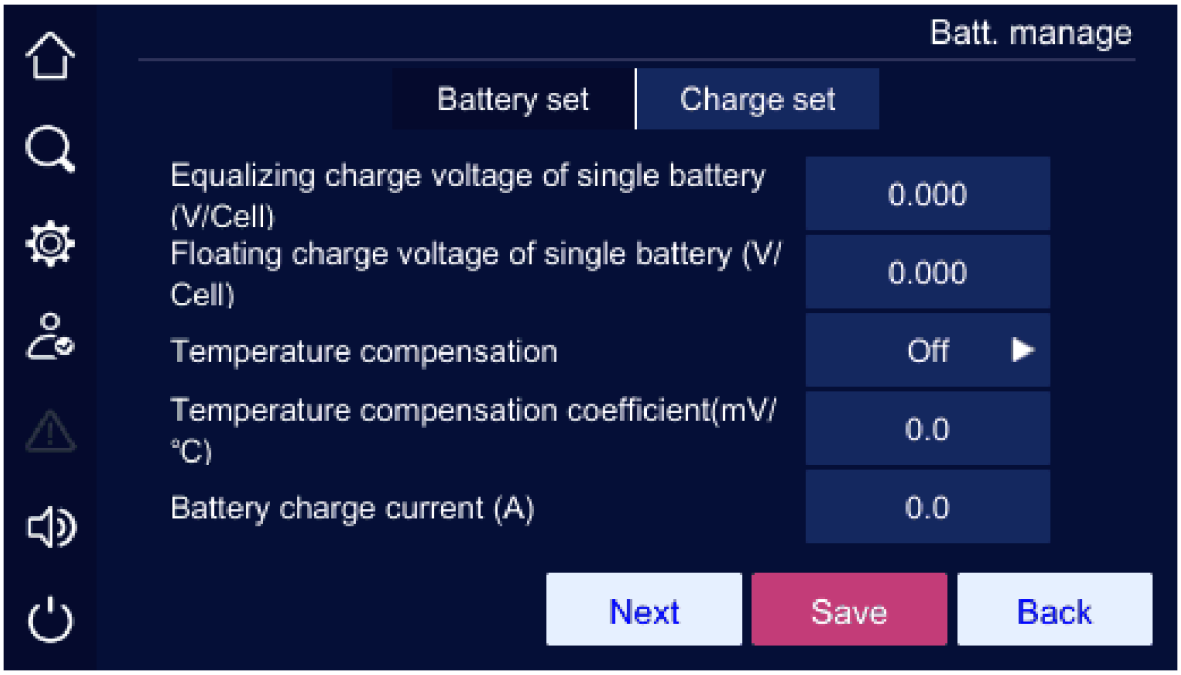

FIGURE 4-31 Charge set page 1 of battery management

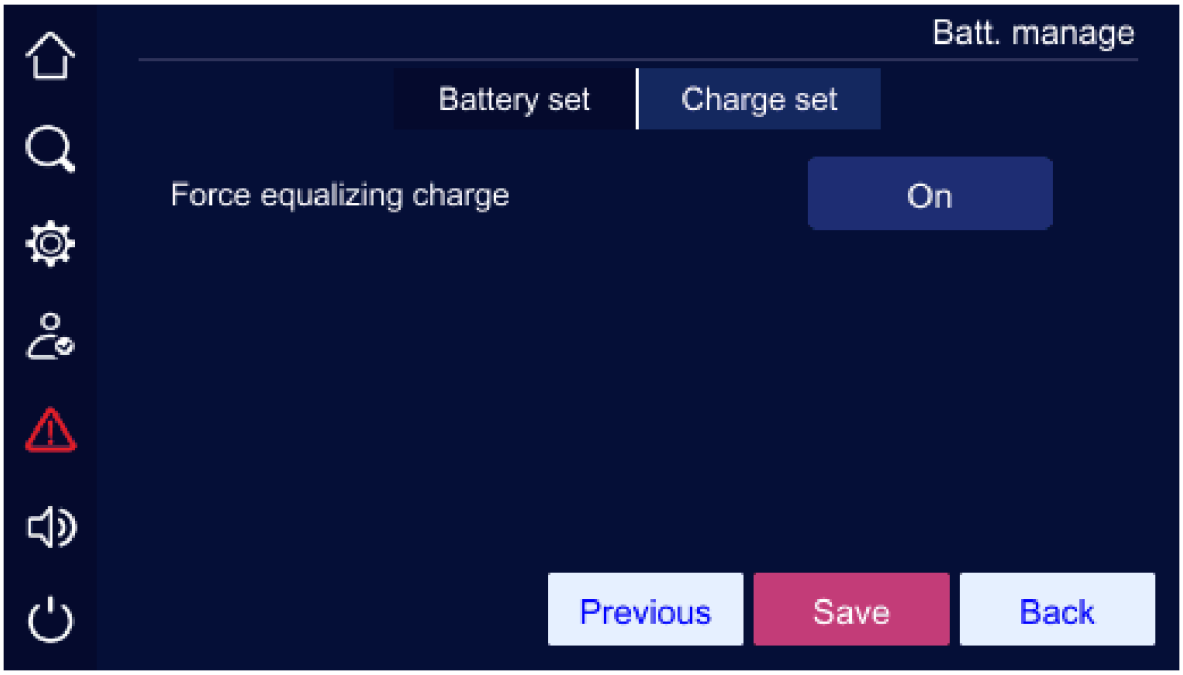

FIGURE 4-32 Charge set page 2 of battery management

When you tap a number field, the permitted range is shown above the keypad; values outside the range are rejected. After setting, click Save button to save the setting. Successful setting/unsuccessful setting mark is the same as that of system management.

TABLE 4-2 Setting description for battery management page

Item	Settable value
Battery type	Lead-acid
Battery capacity (Ah)	1~2000
Battery amount (Cell)	±48~±120 (10K); ±72~±120 (15K/20K/30K/40K)
Battery static function	On, Off
Item	**Settable value**
Battery static time (day)	1~30
Battery static delay time (h)	1~48
Battery backup function	On, Off
Single battery low-voltage protection (V/Cell)	1.667~1.867
Single battery test ending voltage (V/Cell)	1.667~1.867
Equalizing charge voltage of single battery (V/Cell)	2.083~2.417
Floating charge voltage of single battery (V/Cell)	2.083~2.333
Temperature compensation	On, Off
Temperature compensation coefficient (mV/ °C)	0~5.0
Battery charge current (A)	10K-20K UPS: 1.0~10.0; 30K-40K UPS: 1.0~20.0
Force equalizing charge	On

4.5.3 Battery Test Page

The battery test can be a standard test or a deep test, and a running test can be cancelled. The page shows the test status, battery current, consumed capacity and test time. The battery test page is as shown in Figure 4-33.

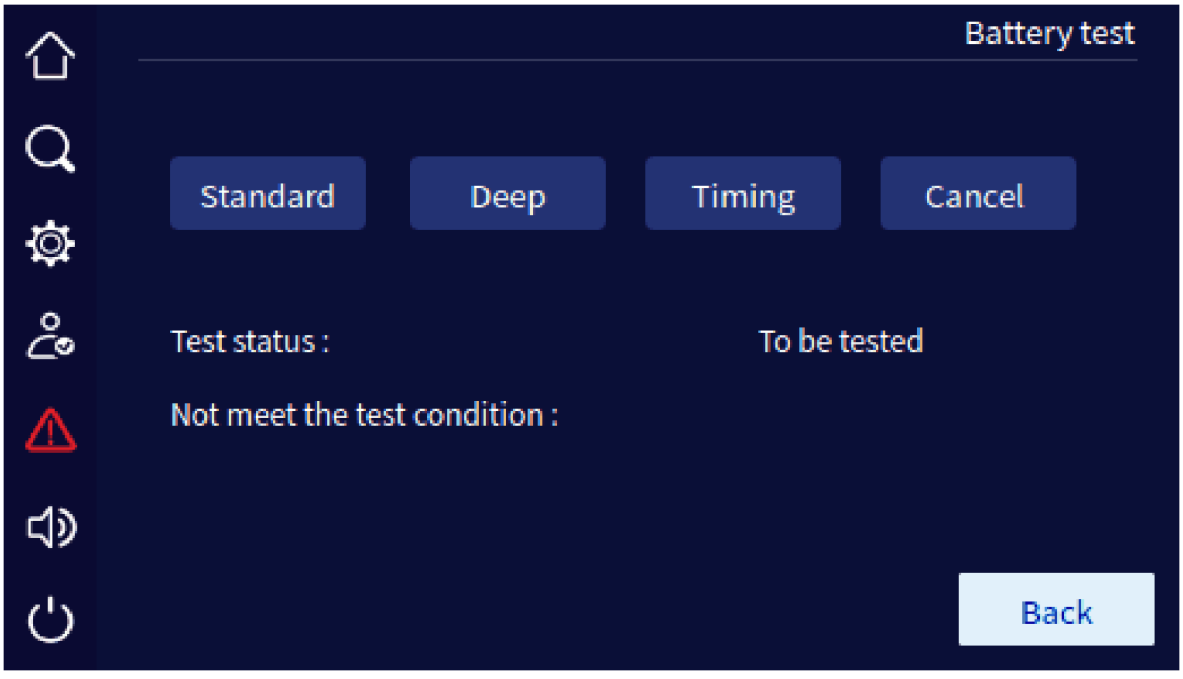

FIGURE 4-33 Battery test page

4.5.4 Dry Contact Page

In the setting management page, click the dry contact icon to enter the dry contact setting pages, as shown in Figure 4-34 to Figure 4-37.

> **NOTE**
> All dry contacts are set in the same way; dry contact 1 is shown below as an example.

INPUT DRY CONTACT

On the Dry contact page, click the " " icon to open the corresponding dry contact

> **NOTE**
> setting page, as shown in Figure 4-35. Click " " button to save the dry contact setting and return to the Dry contact page. After setting, click Save button on Dry contact page to save the setting. Successful setting/unsuccessful setting mark is the same as that of system management.



FIGURE 4-34 Input dry contact setting page 1

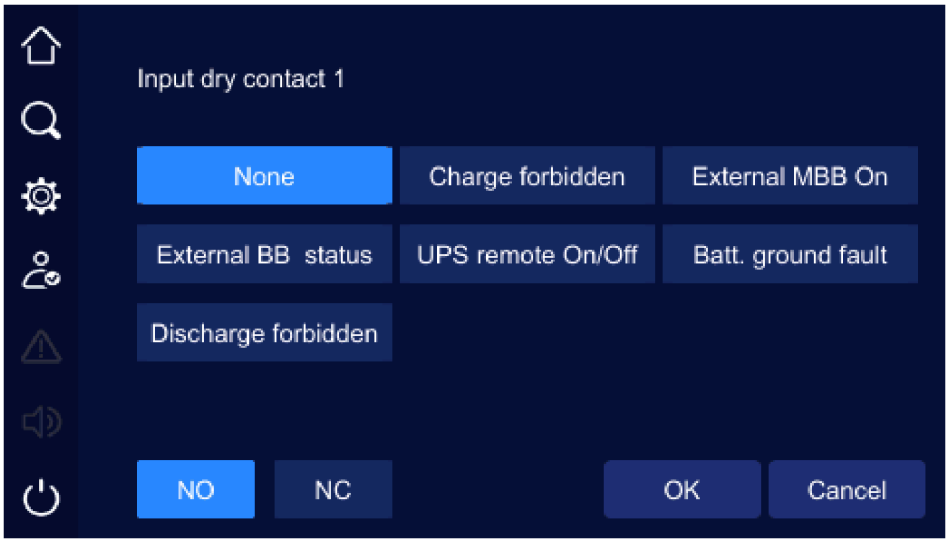

FIGURE 4-35 Input dry contact setting page 2

OUTPUT DRY CONTACT

On the Dry contact page, click the " " icon to open the corresponding dry contact

> **NOTE**
>
> setting page, as shown in Figure 4-37. Click " " button to save the dry contact setting and return to the Dry contact page. After setting, click Save button on Dry contact page to save the setting. Successful setting/unsuccessful setting mark is the same as that of system management.

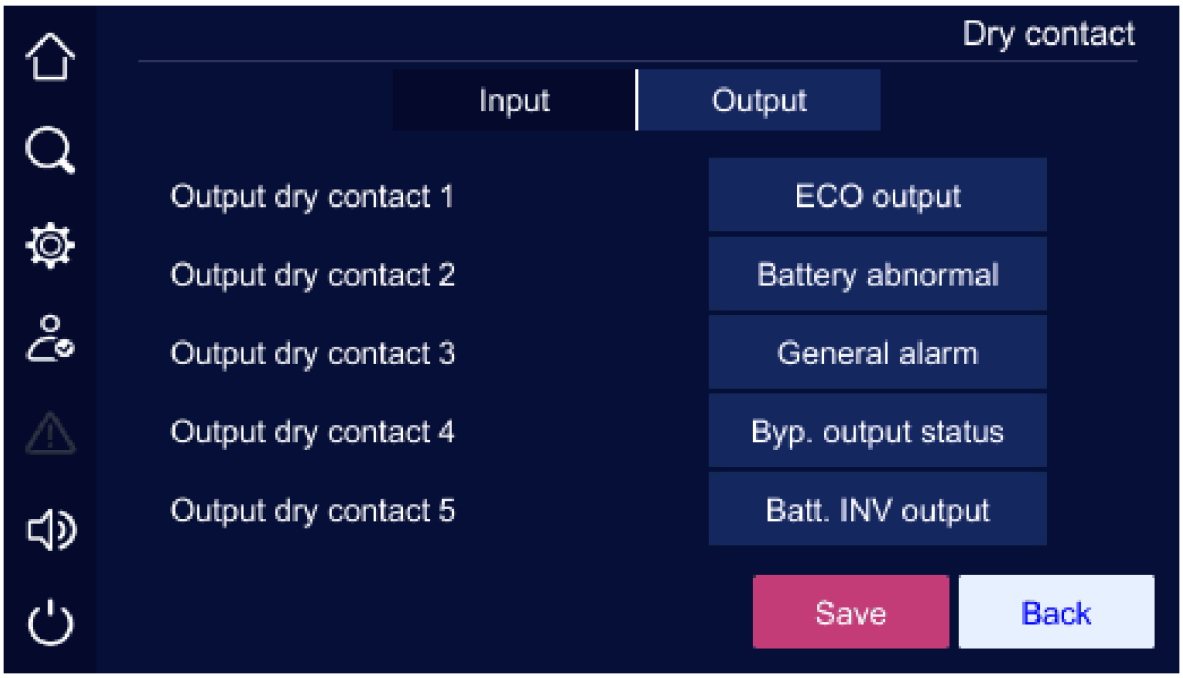

FIGURE 4-36 Output dry contact setting page 1

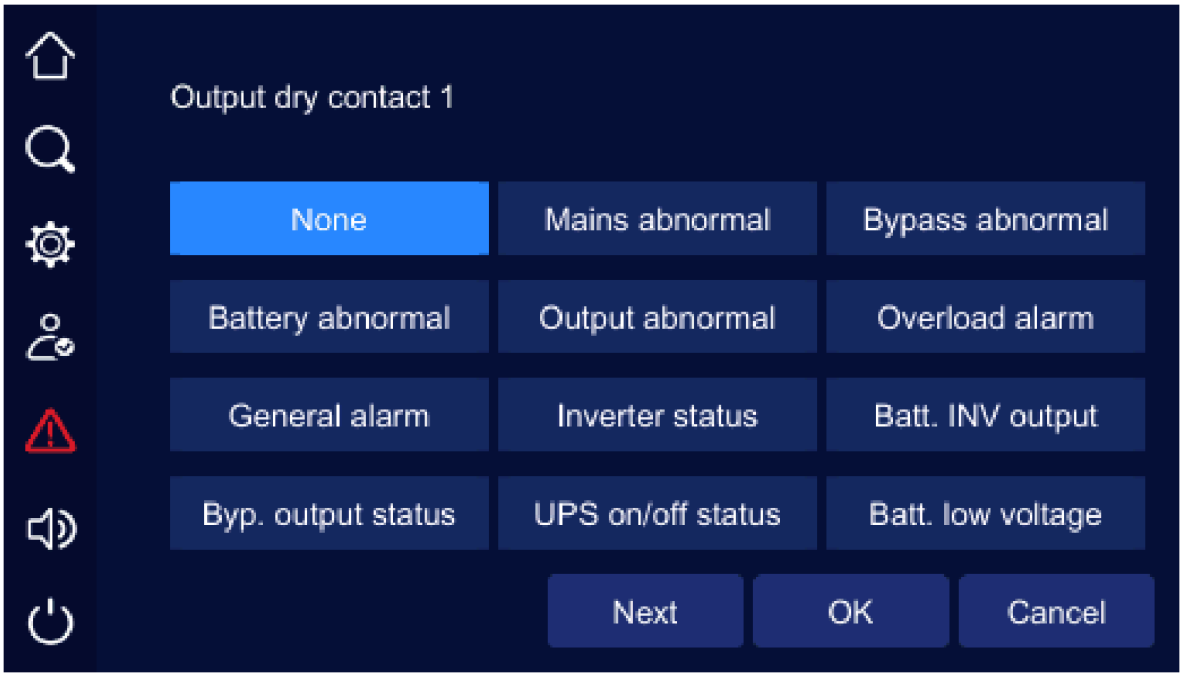

FIGURE 4-37 Output dry contact setting page 2

4.5.5 HMI Setting Page

On the HMI (screen) setting page, you can set the date, time, language, backlight and screen saver, as shown in Figure 4-38.

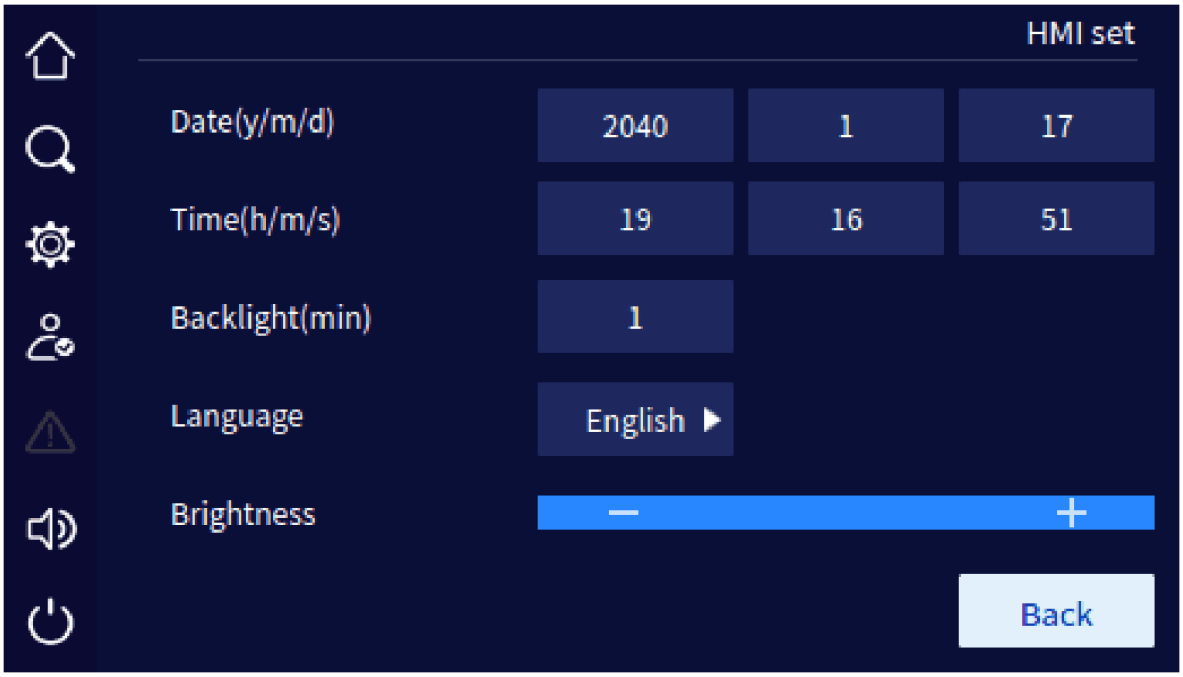

FIGURE 4-38 Screen setting page

4.5.6 Password Setting Page

On the setting management page, click the "password set" icon to open the password setting page, as shown in Figure 4-39.

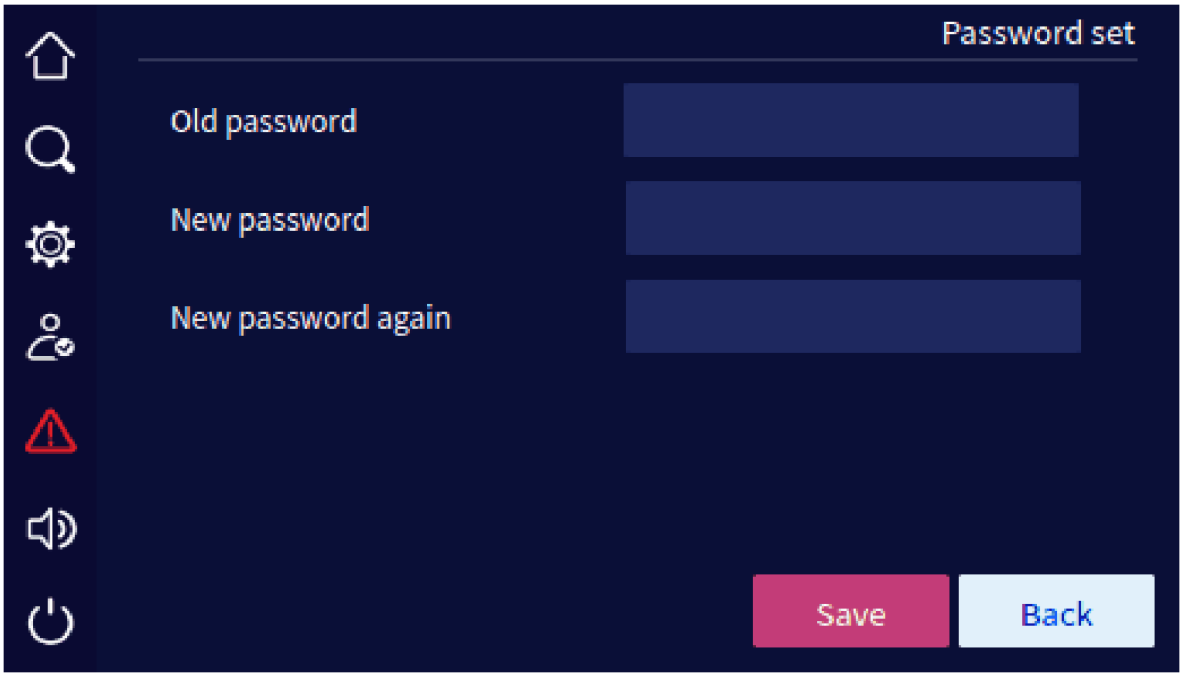

FIGURE 4-39 Password setting page

4.5.7 Device Configuration Page

On the setting management page, click the "device config" icon to open the device configuration page, as shown in Figure 4-40 to Figure 4-43.

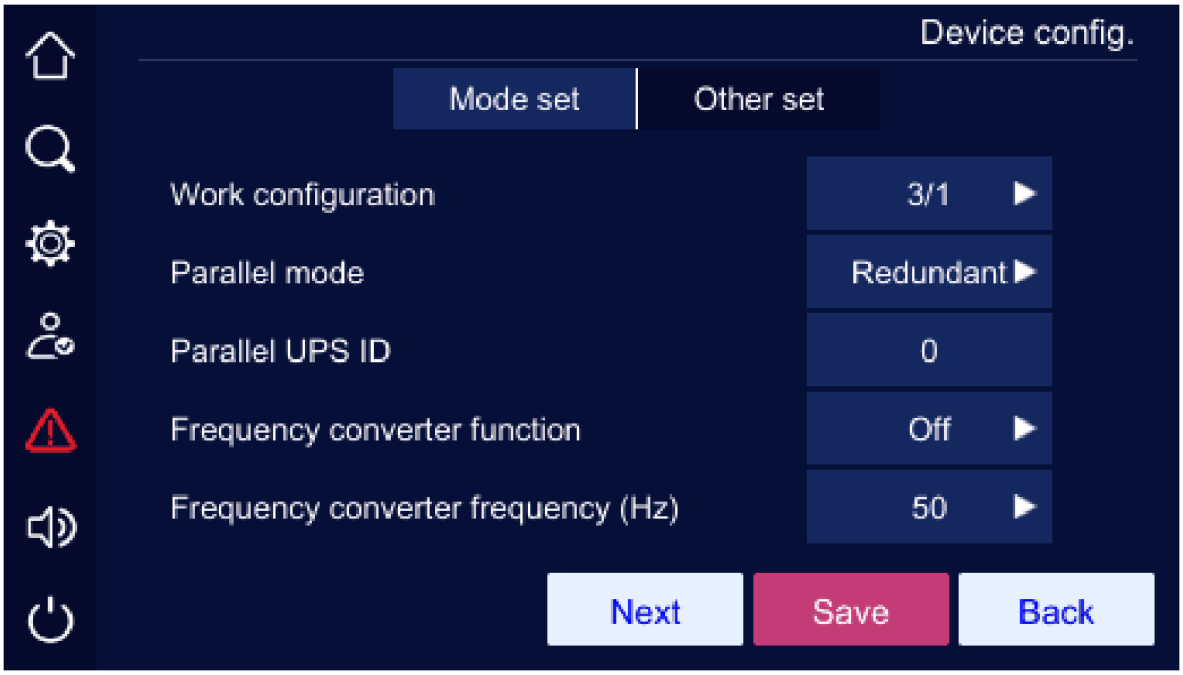

FIGURE 4-40 Mode set page 1 of device configuration



FIGURE 4-41 Mode set page 2 of device configuration

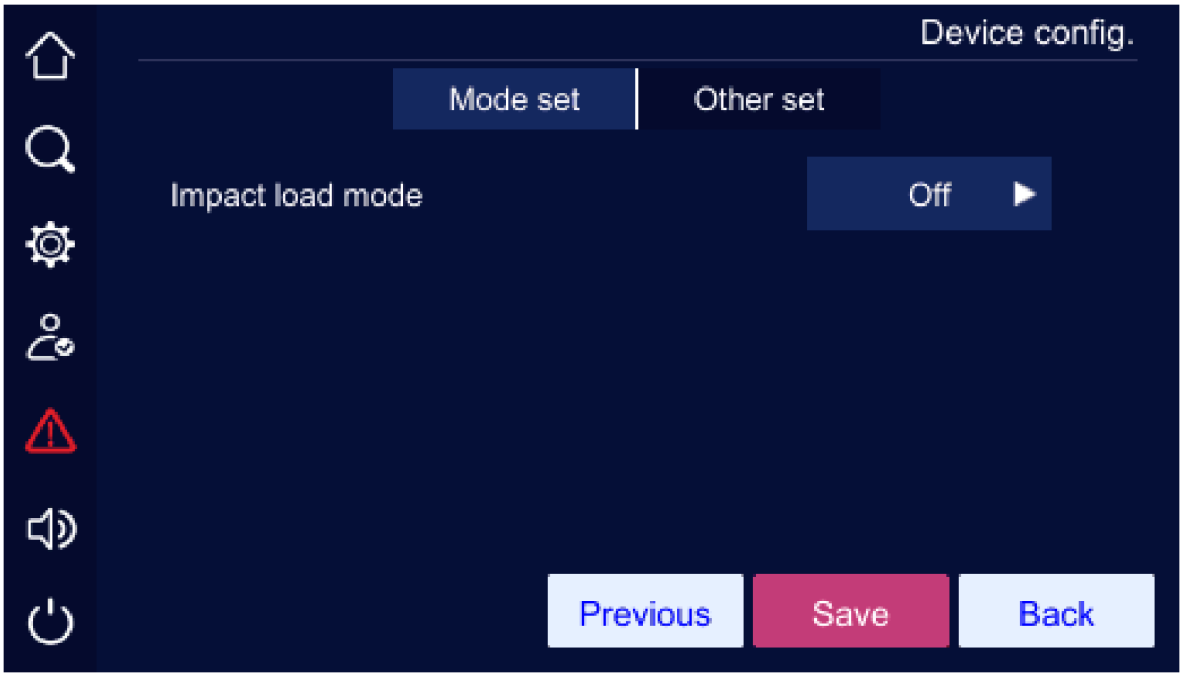

FIGURE 4-42 Mode set page 3 of device configuration

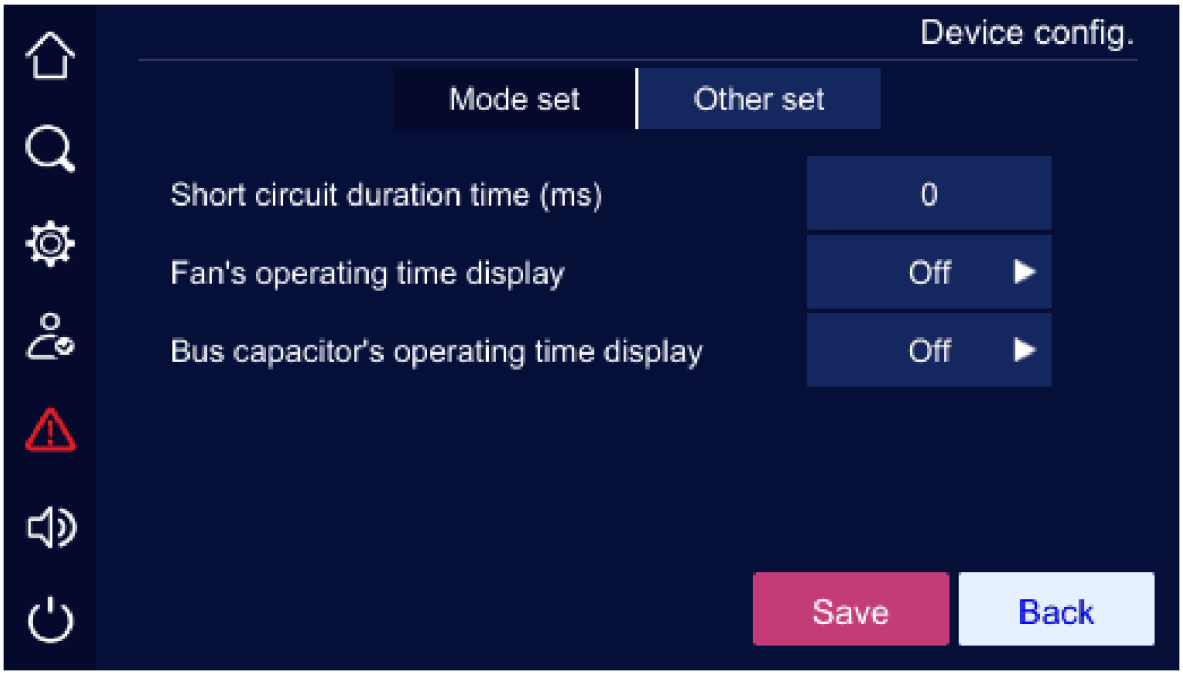

FIGURE 4-43 Other set page of device configuration

When you tap a number field, the permitted range is shown above the keypad; values outside the range are rejected. After setting, click Save button to save the setting. Successful setting/unsuccessful setting mark is the same as that of system management.

TABLE 4-3 Setting description for device configuration page

Item	Settable value
Short circuit duration time (ms)	10-200
Fan's operating time display	On, Off
Bus capacitor's operating time display	On, Off
Work configuration	10K-20K UPS: 3/3, 3/1, 1/1; 30K-40K UPS: 3/3, 3/1
Item	**Settable value**
Parallel mode	Redundant, Single, Expand, BSC
Parallel UPS ID	1-4
Frequency converter function	On, Off
Frequency converter frequency	50, 60
Self-start when power on	UPS will not turn off, On, Off
Bypass disable	On, Off
Bypass disable when short circuit	On, Off
Test load function	On, Off
Test load rate (%)	10-100
Impact load mode	On, Off

4.5.8 Dedust Setting Page

On the setting management page, click the "dedust set" icon to open the dedust setting page, as shown in Figure 4-44.

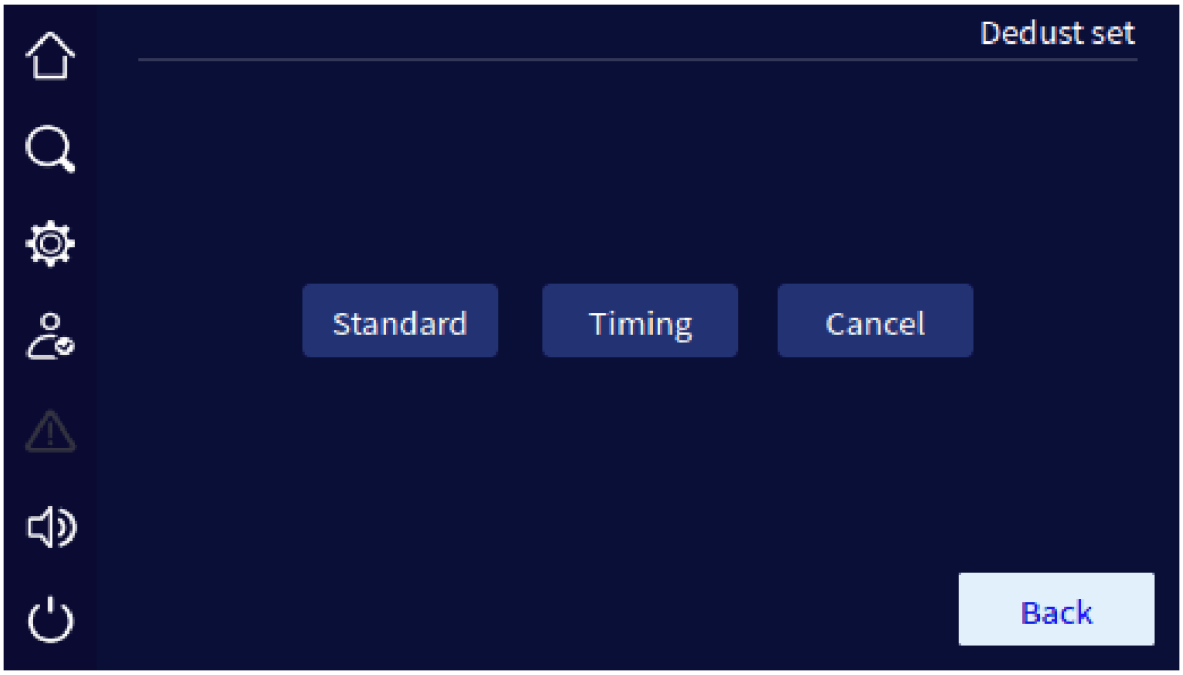

FIGURE 4-44 Dedust set page

4.5.9 Record Management Page

The record management page can export and clear the history log, user log and wave capture. Click the button to export the selected items to a USB flash drive, or the button to clear them. Before clearing, a confirmation window appears (Figure 4-46).

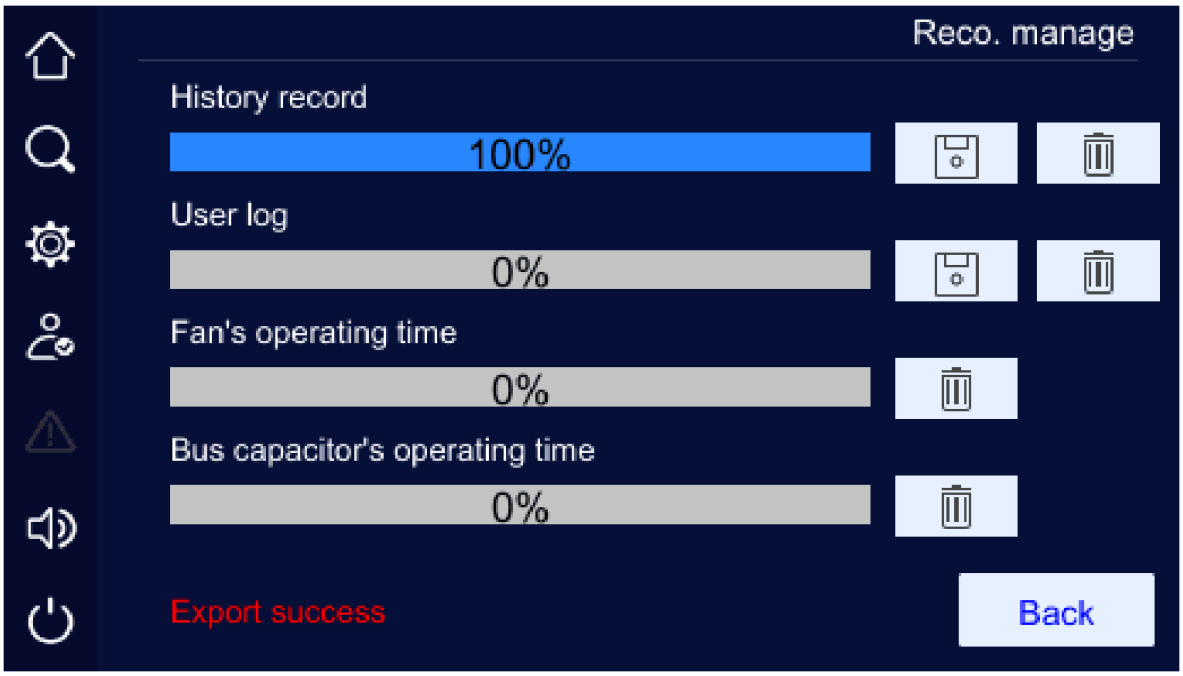

FIGURE 4-45 Export success of record manage page

Insert a USB flash drive to back up the records, as shown in Figure 4-45 and Figure 4-47.

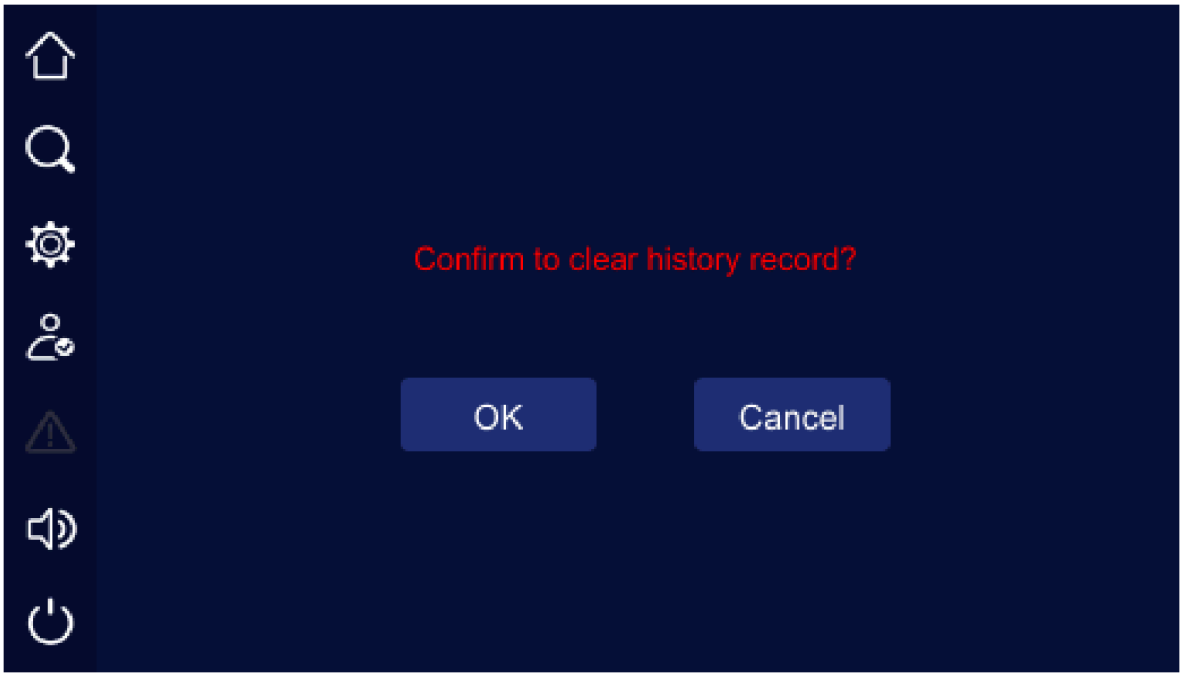

FIGURE 4-46 Confirmation for clearing the log

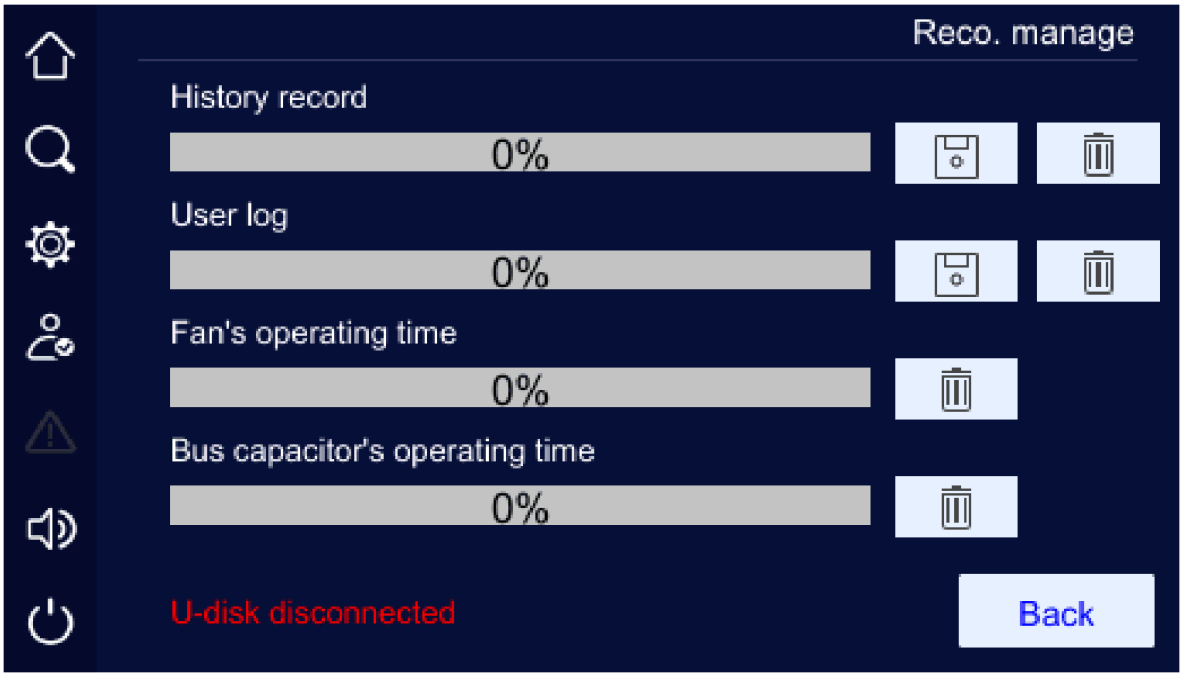

FIGURE 4-47 The USB flash drive is not inserted

4.6 Current Fault Page

When the UPS has a fault, the  icon on the left lights up, as shown in Figure 4-48. Click it to show the current fault information, as shown in Figure 4-49.

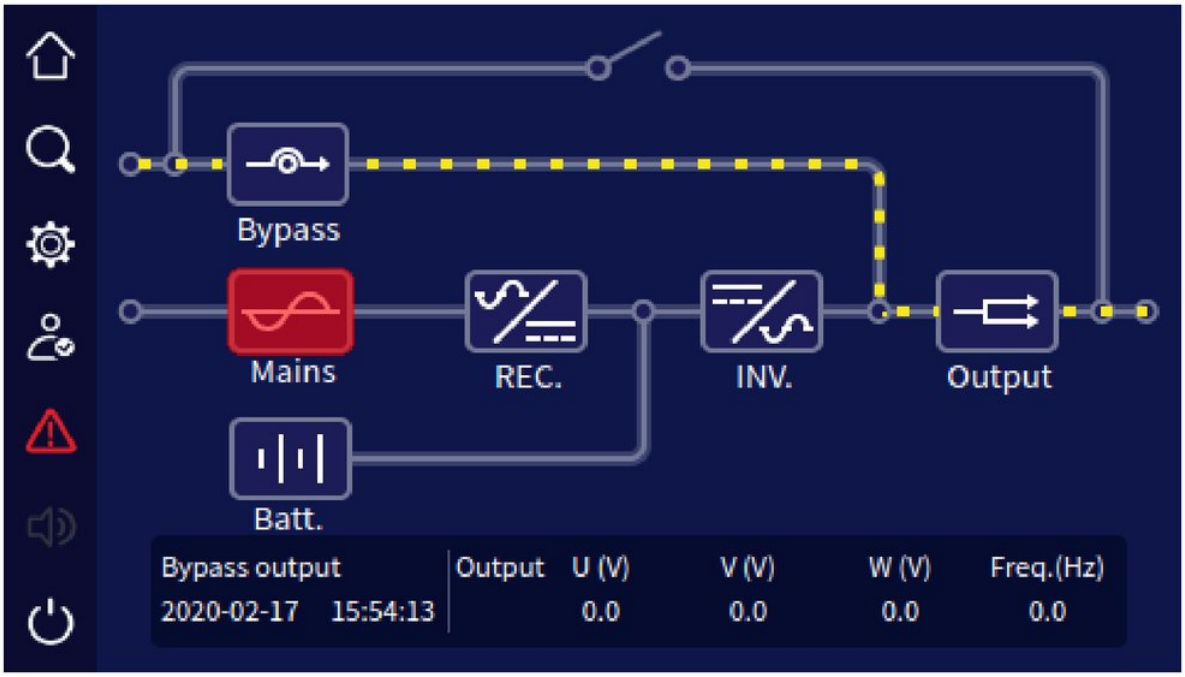

FIGURE 4-48 Fault alarm status

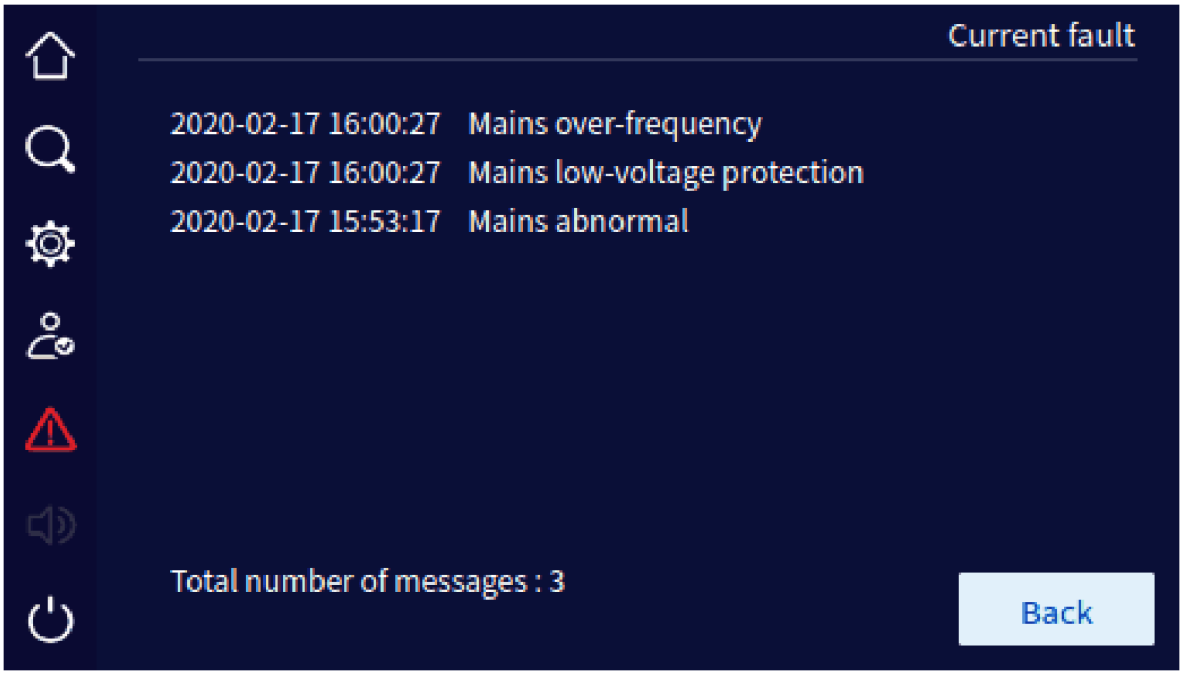

FIGURE 4-49 Current fault information

4.7 Buzzer Control

When the UPS has a fault, the buzzer icon lights up. Click the icon to mute or unmute the buzzer. Figure 4-50 shows the buzzer mute status.

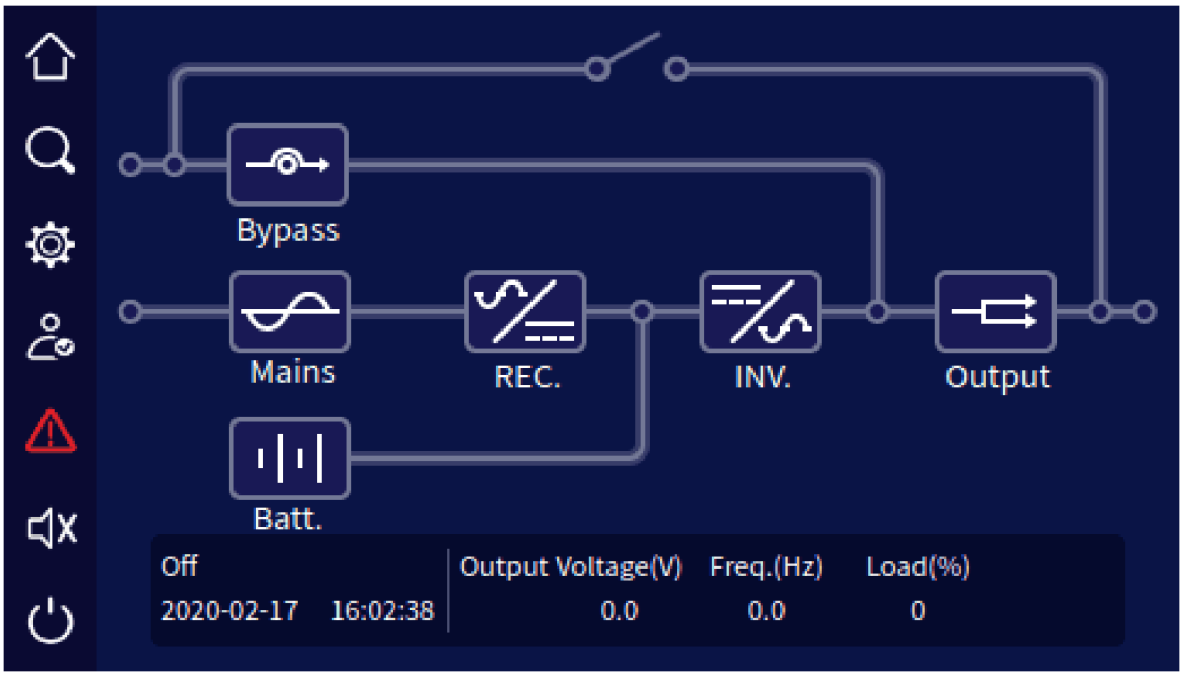

FIGURE 4-50 Buzzer mute status

NOTE

A continuous (long) beep cannot be muted.

4.8 ON/OFF Operation

On the main page, click the icon to start or shut down the UPS. When the UPS is off, the screen asks “Confirm to power on?”; when it is on, it asks “Confirm to power off?”, as shown in Figure 4-51 and Figure 4-52.

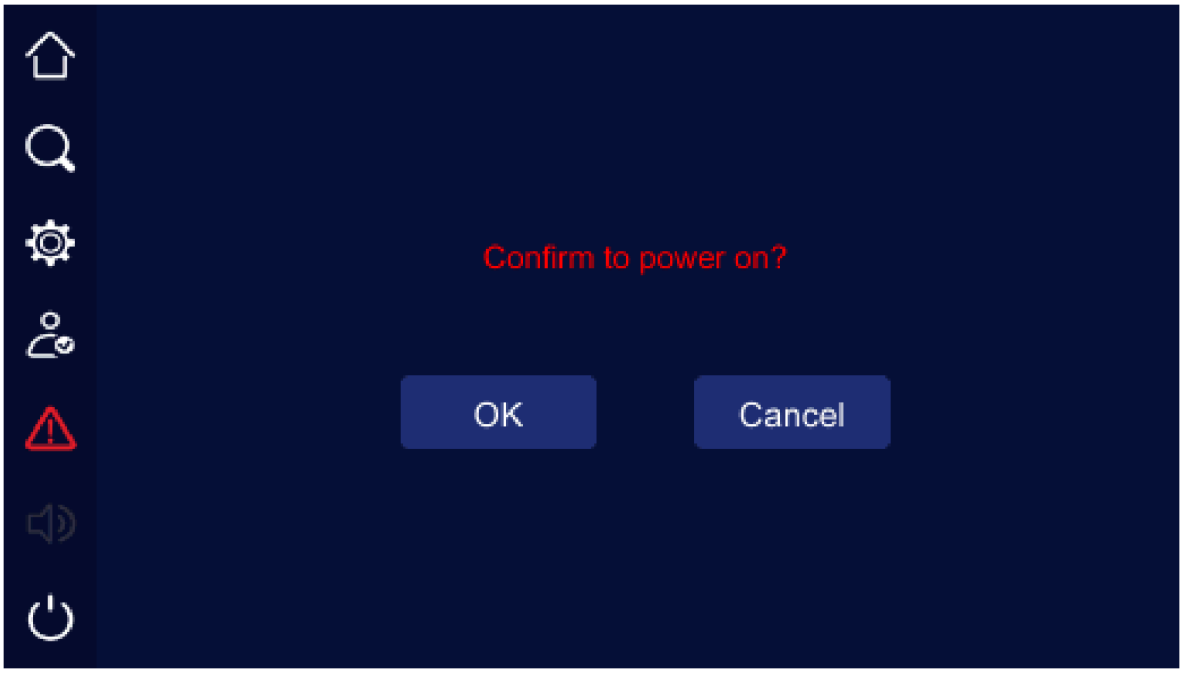

FIGURE 4-51 Confirm to turn on page

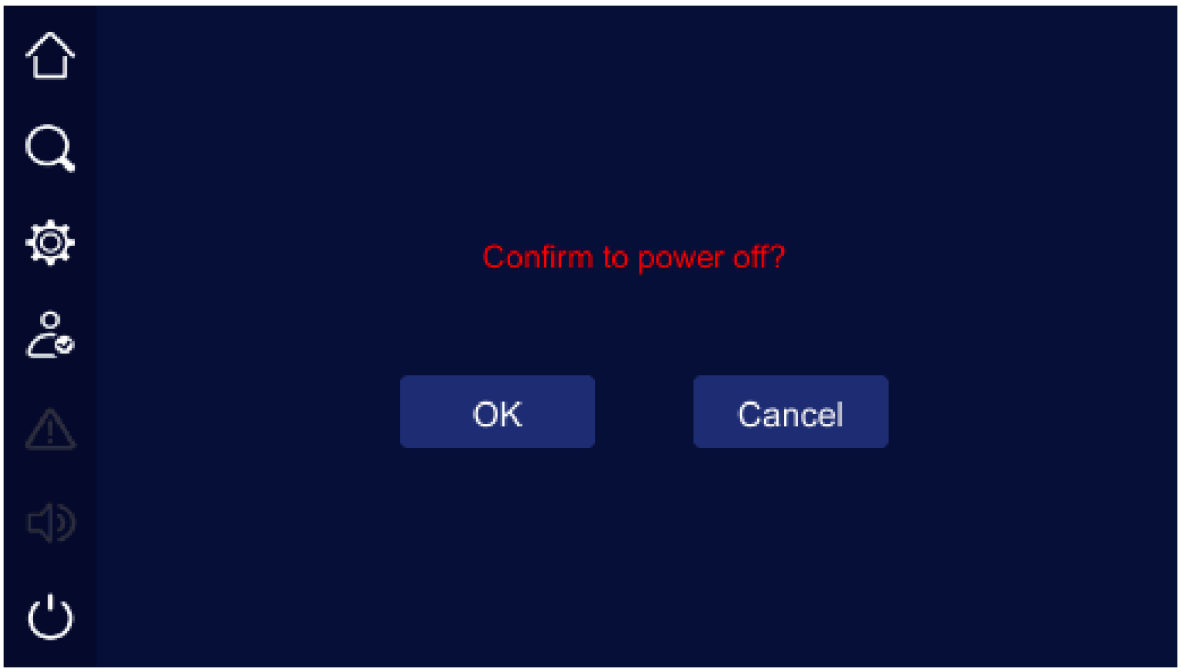

FIGURE 4-52 Confirm to turn off page

05

CHAPTER 5

Use and Operation

This chapter mainly describes the operation process, operation method, daily maintenance and troubleshooting, etc.

IN THIS CHAPTER

5.1 Check Before Startup
5.2 Startup Operation
5.3 Shutdown Operation
5.4 Parallel System Operation
5.5 Periodic Preventative Maintenance
5.6 Battery Maintenance
5.7 Troubleshooting

5.1 Check Before Startup

- Check that all connections are tight and that the colours of the AC cables comply with the standard.
- Check that the UPS is reliably earthed.
- Check that the voltage between the neutral and earth conductors is less than 5 Vac.
- If the UPS is equipped with a remote monitoring device, check that the RS485 port is wired correctly.
- For long-backup models, check that the wiring between the UPS and the battery cabinet is correct and secure.
- Check that the cables are tidy and bundled as specified.
- Check that the installation and wiring allow future modification, expansion and maintenance.
- Check that there is no short circuit at the UPS output and that the load does not exceed the rated capacity of the UPS.

5.2 Startup Operation

PROCEDURE

1. Close the mains, bypass and battery breakers.
2. When the touch screen lights up, press both **ON** buttons on the front panel together for 1 s to start the UPS.
3. After about 10 s, when the UPS is running steadily, switch on the loads (PCs, etc.).

⚠ CAUTION

Switch on the loads in order from the largest to the smallest, to avoid overload protection when a large load starts.

5.3 Shutdown Operation

PROCEDURE

1. Switch off the loads and let the UPS run without load for about 10 minutes to cool down.
2. Press both **OFF** buttons on the front panel together for 1 s to shut down the UPS.
3. Open the battery, bypass and mains breakers.

5.4 Parallel System Operation

5.4.1 Start Parallel System

⚠ CAUTION

1. Ensure that each UPS in the parallel system is equipped with the Parallel Kit-T(2m) NT-PA (optional) for parallel and has been set to the same parallel mode on the screen.
2. For the corresponding screen settings, see 4.5.7 Device Configuration Page.
3. Before starting, make sure that all UPS breakers are open, and do not switch on any load until the whole parallel system has started.

To start the parallel system:

PROCEDURE

1. Make sure that every UPS of the parallel system is installed correctly, then start the UPS units one by one according to 5.2 Startup Operation.
2. When every UPS is on inverter output, measure the inverter voltage of each unit: the difference between the highest and lowest voltage must be within 8 V. Close the output breakers of the units and measure the circulating current: it must be less than 3 A.

If the difference exceeds 8 V, measure the output voltage of each UPS and check that all are at the set voltage (default 230 V). If the difference exceeds 15 V, contact AEC service. An excessive circulating current between the parallel units leads to an inverter fault: if it exceeds 3 A, contact AEC service.

3. Close the main output breaker of the system and each output branch breaker, then switch on the loads one by one.

5.4.2 Shutdown Parallel System

Avoid starting and stopping the parallel system frequently.

PROCEDURE

1. Switch off all loads.
2. Shut down the UPS units one by one.
3. Open the breakers of each UPS (for a routine daily shutdown, the breakers may be left closed).

5.4.3 Exit Parallel System

If one UPS of the parallel system fails, it leaves the parallel system automatically with an audible and visual alarm. Then carry out the operations shown in Figure 5-1 to disconnect the faulty UPS completely from the parallel system, so that it can be serviced or replaced while the system stays online.

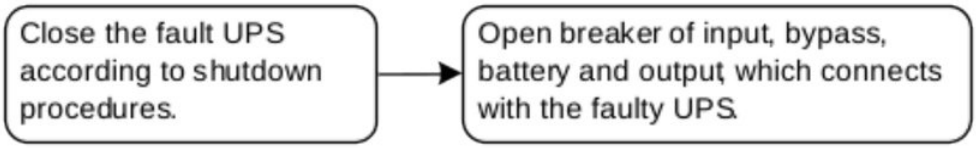

FIGURE 5-1 Exit parallel system

⚠ CAUTION

While the parallel system is running, do not disconnect a unit's output before that UPS has been switched off; otherwise the system output may be disturbed.

5.4.4 Redundancy Function of Parallel System

In an N+1 redundant system, the total output must not exceed N times the rated power of a single UPS. If one UPS fails, it can leave or rejoin the parallel system without affecting system operation, which increases reliability. If the output exceeds N times the rated power of a single UPS (each UPS loaded above N/(N+1) of its rated power), the UPS raises an alarm. For example, in a redundant system of two UPS, an overload alarm is given when each UPS is loaded above 50 % of its rated power.

5.5 Periodic Preventative Maintenance

To improve the efficiency and reliability of the UPS, perform the following maintenance regularly:

- Clean the UPS regularly with a dry cloth; do not use liquid or spray cleaners. Shut down the UPS before cleaning.
- Check that the input and output connections are tight and in good condition.
- Check the cooling fans regularly and keep the air outlets free of obstructions. Replace damaged fans promptly.
- Check the battery voltage and the working status of UPS regularly to detect faults early.

5.6 Battery Maintenance

Battery life depends on the ambient temperature and the number of discharges. Prolonged use at high temperature or deep discharges shorten battery life.

For models with built-in batteries, observe the following:

- Charge the battery for 10 hours before first use. The UPS can be used while charging, but if a power failure occurs during this time the backup time may be shorter than the standard backup time.
- Generally, charge and discharge the battery once every 4 to 6 months. Discharge the battery until the UPS shuts down at low voltage, then recharge it. In hot climates, do this every 2 months. Each charge of the standard battery should last more than 10 hours.
- If the UPS is not used for a long time, charge the battery for more than 10 hours every three months.
- Battery service life is generally 3 to 5 years. Replace batteries that show reduced capacity without delay. Batteries must be replaced by authorised service personnel.

5.7 Troubleshooting

5.7.1 Common Fault

Table 5-1 lists only some common faults. If in doubt, contact your local AEC office or distributor.

TABLE 5-1 Troubleshooting

Fault phenomenon	Possible reason
The mains is normal and the UPS output is normal after start-up, but the UPS runs in battery mode and the buzzer beeps intermittently.	Check if the contactors and wiring terminals in the input circuit are in good condition; Check if the displayed input voltage amplitude or frequency of mains on the touch screen is beyond the allowable range of UPS; Check if the mains input breaker is disconnected, if so, close it again.
After installation, connecting the power blows the fuse or trips the breaker.	Short circuit in the UPS input or output wiring.
After starting, the touch screen display and output are normal. But as soon as a load is connected, the output stops immediately.	The UPS is severely overloaded or the output is short-circuited. Reduce the load or find the cause of the short circuit. A common cause is a short circuit in the output socket adapter, or an input short circuit after UPS damage; The loads were not switched on from the largest to the smallest. Restart the UPS and, once it runs steadily, switch on the largest load first and then the smaller ones in turn.
Buzzer gives a long beep, fault indicator on, UPS in bypass mode, inverter failed.	Output overload: the load exceeds the rated power of the UPS. Reduce the load or use a UPS with a higher rating. A temporary transfer to bypass caused by load inrush, with automatic recovery, is normal; UPS over-temperature protection. Check whether the air inlet or outlet of the UPS is blocked, or the operating temperature is outside the permitted range.
The UPS normally works correctly, but at a power failure it does not transfer to battery mode, or it transfers and soon reaches battery under-voltage protection.	Battery aged, capacity lost. Replace the batteries; Battery charger fault: the battery is not being charged; Battery cable loose or poor terminal contact.
With a PC as load everything works normally, but at a power failure the computer halts although the UPS works normally.	Poor earth connection: the voltage between the neutral and earth conductors is too high.

TABLE 5-2 Meaning of fault symbol and buzzer status

NO.	Fault symbol	Buzzer status	Meaning
1	EPO	Long beep	Emergency power off active (if the EPO function is used): bypass output and inverter output are both switched off.
2	Mode fault	Long beep	The mode set on the screen does not match the actual wiring: check the mains and bypass wiring and set the matching mode.
3	Maintain bypass fault	Long beep	Maintenance bypass protection: inverter output switched off. Check that the maintenance-bypass detection port on the rear panel is shorted.
4	Output fault	Long beep	UPS output fault: check the output for a short circuit or overload.
5	Mode mismatch	Long beep	The input/output mode setting of this UPS does not match the rest of the parallel system.
6	Voltage mismatch	Long beep	The output voltage setting of this UPS does not match the rest of the parallel system.
7	Frequency mismatch	Long beep	The frequency setting of this UPS does not match the rest of the parallel system.

TABLE 5-2 Meaning of fault symbol and buzzer status *(continued)*

NO.	Fault symbol	Buzzer status	Meaning
8	Bypass mismatch	Long beep	The bypass voltage or frequency setting of this UPS does not match the rest of the parallel system.
9	Pattern mismatch	Long beep	The parallel mode setting of this UPS does not match the rest of the parallel system.
10	Power mismatch	Long beep	The output power setting of this UPS does not match the rest of the parallel system.
11	Battery number mismatch	Long beep	The battery number setting of this UPS does not match the rest of the parallel system.
12	Parallel mismatch	Long beep	The parameter settings of this UPS do not match the rest of the parallel system.
13	Short mismatch	Long beep	The short-circuit transfer-to-bypass setting of this UPS does not match the rest of the parallel system.
14	Two-ended fault	Long beep	Parallel cable disconnected at both ends.
15	Single-ended fault	Slow beep	Parallel cable disconnected at one end.
16	Auxiliary power supply failure	Long beep	Internal auxiliary power supply failure. If it does not recover automatically, contact service promptly.
17	Fan failure	Urgent beep (alarm once about every 0.2s)	Fan fault warning: check the fans for damage or obstruction.
18	CAN fault	Slow beep (alarm once about every 2.0s)	CAN communication of the parallel system abnormal: check whether a parallel cable is damaged or whether only one UPS of the parallel system is running.
19	SCI fault	Long beep	Internal communication abnormal. If the alarm persists, contact service promptly.
20	There is no redundancy in the parallel UPS	Slow beep (alarm once about every 2.0s)	The total load of the parallel system exceeds the full load of a single UPS, so redundancy is lost: check the output load.
21	Main power abnormal	Long beep	Mains input phase sequence abnormal: check the mains input wiring.
3 continuous alarms at 10s intervals	Mains input fault: missing neutral, power failure, over- or under-voltage, over- or under-frequency. Check the mains input.		
22	Bypass abnormal	Slow beep (alarm once about every 2.0s)	In mains mode: bypass voltage, frequency or phase sequence abnormal, or the mode setting does not match the wiring. Check that the bypass breaker is closed, that the bypass phase sequence is correct and that the bypass wiring matches the mode setting.

TABLE 5-2 Meaning of fault symbol and buzzer status *(continued)*

NO.	Fault symbol	Buzzer status	Meaning
23	Battery abnormal	Slow beep (alarm once about every 2.0s)	Battery over-voltage protection, charging fuse failure or over-voltage alarm: check the battery status.
		Urgent beep (alarm once about every 0.2s)	Battery wiring fault, charger short circuit, under-voltage protection or under-voltage warning: check the battery wiring and the battery condition.
		No buzzer warning	The battery charging temperature is too high.
24	Rectifier abnormal	Urgent beep (alarm once about every 0.2s)	UPS rectifier fault.
25	Inverter abnormal	Long beep	UPS inverter fault.

NOTE

The buzzer patterns in the table apply when the UPS is on and the buzzer is not muted. When the UPS is off, or the buzzer is muted, alarms are shown on the touch screen only.

CHAPTER 6

06 Package, Transportation and Storage

IN THIS CHAPTER

6.1 Package
6.2 Transportation
6.3 Storage

6.1 Package

When packing, observe the orientation marks. The side of the package carries the "keep dry", "handle with care", "this way up" and other warning marks, and the device model. The device name is printed on the front of the package.

6.2 Transportation

During transport, observe the warning marks and avoid severe impacts on the package. Place the device in the marked orientation to avoid damaging components. Flammable, explosive or corrosive materials must not be shipped with the device. Do not leave the device outdoors during transit or intermediate storage. The device must not be exposed to rain, snow, liquids or mechanical damage.

6.3 Storage

Store the UPS in the marked orientation. Keep the package 200 mm above the floor and at least 500 mm from walls, heat sources, cold sources, windows and air inlets.

Storage temperature: -20 °C to 50 °C; relative humidity 20 % to 80 %. The warehouse must be free of flammable, explosive or corrosive materials and harmful gases, and of strong vibration, shocks and magnetic fields. Under these conditions the storage period is generally 6 months; after more than 6 months of storage the UPS must be checked again. For long-term storage, charge the battery every 3 months.

APPENDIX A

A Technical Specifications

Index ⌄	Model ›	10K	15K	20K	30K	40K
Input	Input mode	3W+N+PE (can be set to 1W+N+PE)			3W+N+PE	
	Voltage range (Vac)	Input voltage 176~280: the UPS can carry 100 % of rated power; Input voltage 80~176: the output power is derated linearly				
	Frequency range (Hz)	39.5 ~ 70.5				
	Bypass synchronism track range (Hz)	50/60±10% (50/60 self-adaption)				
	Bypass input voltage range (%)	10%/15%/20% (default is 20%)				
	power factor ≥0.99					
	THDI	Input Resistive full load: ≤3%; non-linear full load:				
	Battery voltage (Vdc)	±96 ~ ±240 (can be selected from ±48 cells ~ ±120 cells, default is ±48 cells)	±144 ~ ±240 (can be selected from ±72 cells ~ ±120 cells, default is ±96 cells, when the battery voltage is set from ±72 cells ~ ±90 cells, the output of the UPS decreases to 75% rated) (cell voltage 2 Vdc)			
	Charge current (A)	1 ~ 10 settable (default is 1)			1 ~ 20 settable (default is 2)	
	Output mode	3W+N+PE (can be set to 1W+N+PE)			3W +N+PE	
	Capacity (kVA/kW)	10/10	15/15	20/20	30/30	40/40
	Voltage (Vac)	L-N: 220/230/240 (default is 230); L-L: 380/400/415 (default is 400)				
	Frequency (Hz)	When bypass frequency is normal, it tracks the bypass input;				
		When the bypass is lost or its frequency is abnormal, the output frequency is 50±0.1 or 60±0.1 (factory default 50)				
	Wave form	Sine-wave				
	Voltage distortion	Resistive full load: ≤2%; Non-linear full load: ≤4%			Resistive full load: ≤1%; Non-linear full load: ≤4%	
	Power factor	0.9/1 settable (default is 1)				
	Transfer time of bypass and inverter (ms)	Synchronization: <1ms; Asynchronization: <10ms				
	System efficiency	Up to 96%				
	Overload capacity	PF=0.9 Inverter: <105%: continue; 115%~130%: 15min; 130%~155%: 1min; 155%~200%: 200ms; >200%: protection immediately. Bypass: <130%: continue; 130%~155%: 1min; >155%: 200ms.				
		PF=1.0 Inverter: <105%: continue; 105%~110%: 60min; 110%~130%: 10min; 130%~155%: 1min;				
Output		155%~200%: 200ms; >200%: protection immediately. Bypass: <130%: continue; 130%~155%: 1min; >155%: 200ms.				
Other	DC startup function	Equipped				
	Panel display	Touch screen showing the UPS operating status				
	Communication port	RS485, dry contacts; optional: SNMP card, Protocol Transfer Kit (RS485/RS232), Dry-contact Kit				
	Alarm function	Alarm for battery low-voltage, mains abnormal, UPS fault, output overload, etc.				
	Protection function	Protection for battery under-voltage, overload, short-circuit, over-temperature, input over-voltage, communication abnormal, etc.				
	Noise (dB)	<55 (25 °C)				
	Work temperature (°C)	-5~40				
	humidity	Relative 0~95%, non-condensing				
	IP class	IP20				
	Size (W×D×H) (mm)	250×806×880			300×842×1250	
	Weight (kg)	10 kVA: 64; 10kVA (S): 95; 10kVA (T): 128	15kVA: 64; 15kVA (S): 137.6; 15kVA (T): 128	20kVA: 64; 20kVA (S): 137.6; 20kVA (T): 128	30kVA: 102.5; 30 kVA (S) : 249.7; 30 kVA (T): 222	40kVA: 102.5; 40kVA (S): 249.7; 40kVA (T): 222

- Specifications are subject to change without prior notice.

Dimensions and weights

Overall dimensions in millimetres (W × D × H) and net weights, from the technical data of this manual. Leave the clearances given in the installation chapter around the UPS.

IST7 10 / 15 / 20 kVA

tower



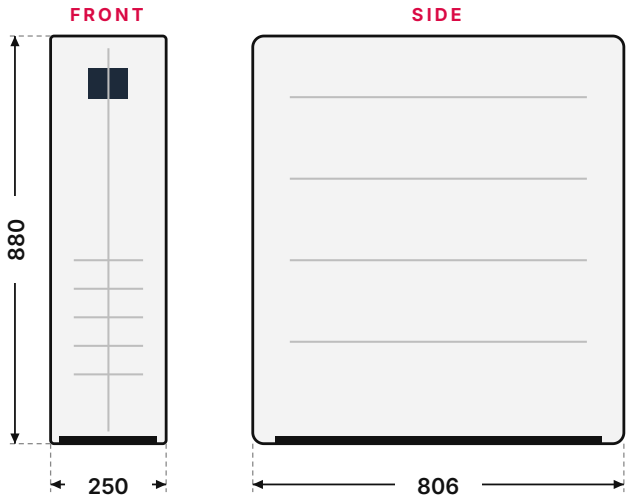

W × D × H	250 × 806 × 880 mm
10 kVA / 10 kVA (S)	64 / 95 kg
15 kVA / 15 kVA (S)	64 / 137.6 kg
20 kVA / 20 kVA (S)	64 / 137.6 kg

IST7 30 / 40 kVA

tower



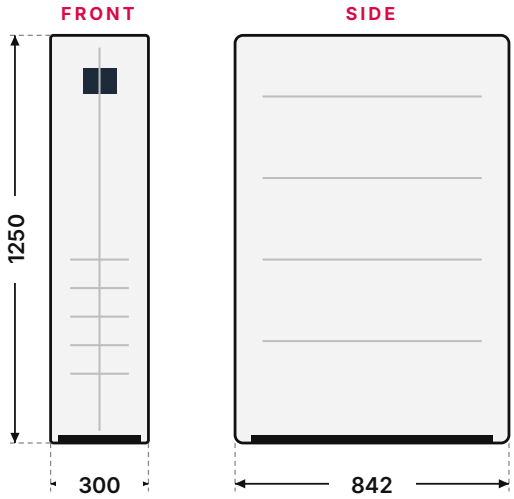

W × D × H	300 × 842 × 1250 mm
30 kVA / 30 kVA (S)	102.5 / 249.7 kg
40 kVA / 40 kVA (S)	102.5 / 249.7 kg
40 kVA (T)	222 kg

APPENDIX B

B Acronyms and Abbreviations

Acronym	Meaning
AC	Alternating Current
BB	Battery Breaker
BMD	Bypass Maintain Detection
DC	Direct Current
ECO	Economic Operation Mode
EPO	Emergency Power Off
HMI	Human-Machine Interface
IEC	International Electrotechnical Commission
IGBT	Insulated-Gate Bipolar Transistor
MBB	Maintenance Bypass Breaker
NC	Normally Closed (contact)
PE	Protective Earthing
PF	Power Factor
PFC	Power Factor Correction
RS232	Recommended Standard 232 (serial port)
RS485	Recommended Standard 485
SNMP	Simple Network Management
UPS	Uninterruptible Power System
USB	Universal Serial Bus

More on the AEC partner portal

PARTNER PORTAL

portal.emea.aecups.com

- 3D models of every UPS
- Diagrams and drawings
- Video tutorials
- Manuals and catalogues, always up to date

WHATSAPP SUPPORT

+39 393 080 5211

Technical support 24/7. Scan the code to write to AEC service.

AEC International Srl
Via Nerviano 55 · 20045 Lainate (MI) · Italy

Sales +39 02 9415 8991 · info@aecups.com
Service +39 393 080 5211 · service@aecups.com