AEC
Technology Behind Power

USER MANUAL

IST7

60–200 kVA

Online double-conversion UPS, three-phase



English

Read this manual before installing and using the UPS.
Keep it for future reference.

AEC-UM-IST7-60-200-EN
Rev. 01 · 10/2026

OVERVIEW

Contents

	About this manual	**3**
1	**Safety Instructions**	**4**
1.1	Safety Notices	4
1.2	Operation and Maintenance Requirements	7
1.3	Environment Requirements	8
2	**Overview**	**9**
2.1	Product Introduction	9
2.2	Work Principle	10
2.3	Appearance and Structure	13
2.4	Optional Accessory	21
2.5	Alarm Function	26
3	**Installation**	**33**
3.1	Installation Procedure	33
3.2	Installation Preparation	34
3.3	Transportation and Unpacking	37
3.4	Mechanical Installation	39
3.5	Wiring	47
3.6	System Check and Test	52
4	**Touch Screen Operation and Setting**	**53**
4.1	LCD Interface Flowchart	53
4.2	Main Page	55
4.3	System Work Status Display	56
4.4	Buzzer Control Function	60
4.5	Monitor Page	61
4.6	Setting Manage	64
4.7	Information Manage	69
4.8	ON/OFF	74
5	**Use and Operation**	**75**
5.1	Operating Precautions	75
5.2	Operation Procedure	75
5.3	UPS Start and Shutdown	75
5.4	Parallel System Startup and Shutdown	79
6	**Maintenance and Troubleshooting**	**82**
6.1	Maintenance Guide	82
6.2	Battery Maintenance	82
6.3	Battery Replacement Precautions	83
6.4	Troubleshooting	83
7	**Package, Transportation and Storage**	**86**
7.1	Package	86
7.2	Transportation	86
7.3	Storage	86
A	**Technical Specifications**	**87**
	Dimensions and weights	89

BEFORE YOU START

About this manual

This manual describes the AEC IST7 60–200 kVA UPS: online double-conversion UPS, three-phase. It covers the features, controls, installation, operation, maintenance, transport and storage. Read it before you start, and keep it with the UPS for future reference.



60 – 120 kVA



160 – 200 kVA

96.5 % maximum efficiency	**≧ 0.99** input power factor
< 1 ms inverter ↔ bypass transfer, synchronised	**100 %** unbalanced load capacity

MODELS COVERED

- IST7 60 kVA, 80 kVA, 100 kVA and 120 kVA, three-phase cabinet
- IST7 160 kVA and 200 kVA, three-phase cabinet

WHO THIS MANUAL IS FOR

Installers, electricians, IT and facility staff who install, operate and maintain the UPS. Electrical installation and any work inside the UPS must be done by qualified personnel, in line with IEC 60364 and the local wiring rules.

Product standard: IEC 62040

Safety messages

Safety messages in this manual follow ISO 3864 / ANSI Z535. The signal word tells how serious the hazard is.

DANGER	A hazardous situation which, if not avoided, **will** result in death or serious injury.
WARNING	A hazardous situation which, if not avoided, **could** result in death or serious injury.
CAUTION	A hazardous situation which, if not avoided, could result in minor or moderate injury, or in damage to the equipment.
NOTE	Additional information that stresses or completes the text.
TIP	A hint that helps you solve a problem or save time.

Numbers in red circles on a picture are explained in the table or list that follows it. References in red, such as Figure 2-1 or Table 3-1, are links in the PDF. Figures are for reference only: the actual product may differ in detail.

Up and running

The short version: each step points to the full instructions. Read the safety chapter first.

1. **Read the safety instructions.** See Section 1.1, Safety Notices.
2. **Unpack and check the delivery.** See Section 3.3, Transportation and Unpacking.
3. **Choose the place and prepare the cables and breakers.** See Section 3.2, Installation Preparation.
4. **Install and connect the UPS.** See Section 3.5, Wiring.
5. **Start the UPS.** See Section 5.3.2, UPS Startup.
6. **Check the display and the settings.** See Section 4.1, LCD Interface Flowchart.
7. **Look after the UPS.** See Section 5.3.5, Switch to Maintenance Bypass Mode From Inverter Output.

01

CHAPTER 1

Safety Instructions

This chapter describes the safety notices. Before performing any work on the UPS, read this user manual carefully to avoid personal injury and damage to the device caused by improper operation.

IN THIS CHAPTER

1.1 Safety Notices
1.2 Operation and Maintenance Requirements
1.3 Environment Requirements

AT A GLANCE **The safety rules of this chapter**



High voltage inside, also after the UPS is switched off: wait before opening it.



Installation, opening and service by qualified personnel only.



Batteries: never short-circuit them, keep them from fire, use only the specified type.



Electrostatic-sensitive boards: wear an earthed wrist strap.



Earth the UPS before connecting anything else.



No liquids or foreign objects inside the UPS.



In case of fire use a dry-powder extinguisher, never water or liquid.



Keep the air inlets and outlets free; respect the clearances.

1.1 Safety Notices

This section describes the safety notices that must be observed during installation, use, maintenance and all related operations.

CAUTION

Before operating the UPS, read the safety notices and operating instructions in this section carefully to avoid accidents.

The DANGER, WARNING and CAUTION notices in this manual do not cover all safety rules that must be observed; they only supplement the general safety rules for operation.

NOTE

AEC accepts no liability for consequences of violating general safety requirements or the safety standards for design, manufacture and use.

1.1.1 Safety Instructions

⚠ CAUTION

The input and output of the UPS carry dangerous high voltage; improper operation can endanger life. Read this manual carefully before installing or operating the UPS and observe the warning labels. Only authorised persons may remove the UPS enclosure.

⚠ DANGER

Never touch any terminal or conductor connected to the mains circuit: danger of death.

⚠ DANGER

A damaged or faulty device can cause electric shock or fire!

- Before operating, inspect the device for damage or any other hazard.
- Check that the external devices and circuit connections are safe.

⚠ DANGER

Do not work on high-voltage or AC circuits, or on towers and masts, during a thunderstorm. A thunderstorm generates strong electromagnetic fields. To protect the equipment against lightning strikes, make sure lightning protection and earthing are installed beforehand.

⚠ WARNING

If the load can feed energy back to the UPS (regenerative loads such as motor drives or lifts), consult AEC before connecting it.

⚠ WARNING

Do not swap the earth and neutral conductors, or the live and neutral conductors: this causes a short circuit.

The UPS must be properly earthed, and the voltage between earth and neutral must be less than 5 V.

⚠ WARNING

Do not put fingers or tools into rotating fans: risk of injury and damage to the device.

⚠ WARNING

In case of fire, use a dry-powder extinguisher. Do not use liquid extinguishers: risk of electric shock.

⚠ CAUTION

Ensure good ventilation! Keep the air inlet, the air outlet and the cabinet fans free from obstruction.

⚠ CAUTION

No liquid or other objects are allowed to enter the cabinet.

⚠ CAUTION

This product is a category C3 device (IEC 62040-2). In residential environments it may cause radio interference; the user must take measures to avoid it.

⚠ CAUTION

Affix warning labels on the upstream isolators, also when they are installed away from the UPS!

Dangerous voltage can remain when the UPS is switched off. Affix a warning label on every upstream isolator that supplies the UPS, even if it is installed away from the UPS. The label must read: 1. This circuit supplies a UPS. 2. Isolate the UPS before working on this circuit.

1.1.2 Operating Precautions for Battery

⚠ CAUTION

Use only the specified batteries. Other batteries can damage the UPS.

Different brands and types of battery require different charging voltages. Before use, make sure that the charging voltage of the UPS matches the battery. If in doubt, consult AEC.

⚠ WARNING

Battery operation must be done according to instructions!

Battery work, especially battery wiring, must follow the instructions. Improper operation can damage the battery and cause personal injury.

- Never short-circuit the positive (+) and negative (-) terminals of the battery. All battery connections must be tightened. Never touch two battery terminals or two bare cable ends at the same time: this can damage the battery or cause injury.
- Prevent electrolyte leakage. Leaking electrolyte corrodes metal parts and circuit boards, causing equipment damage and short circuits on the boards.
- Keep the battery away from fire and from any device that can produce sparks, to avoid danger or loss.

1.1.3 Anti-Static Protection

⚠ CAUTION

Static electricity from the human body can damage electrostatic-sensitive components on the PCBs. Before touching such components, wear an anti-static wrist strap and connect its other end to earth.

1.1.4 Grounding Requirements

⚠ WARNING

High leakage current: earth connection essential before connecting the supply. The earthing terminal must be connected to earth.

- When installing, connect the earth conductor first; when dismantling, remove the earth conductor last.
- Do not damage the earth conductor.

- The device must be permanently connected to protective earth. Before operating, check the electrical connections and make sure the device is reliably earthed.

1.1.5 Safety Warning Label Setting

To prevent unauthorised persons from approaching or operating the UPS during installation or routine maintenance, observe the following rules.

- Place warning labels on the input and output switches to prevent them from being closed by mistake and causing accidents.
- Use warning labels or a marked safety area to keep unauthorised persons away and prevent injury or damage.
- After maintenance, remove the key of the UPS door and keep it in a safe place.

1.1.6 Measurements on Live Equipment

⚠ CAUTION

Dangerous high voltage is present; accidental contact can be fatal. When measuring on live equipment, use protective equipment (such as insulated gloves).

The measuring instrument must meet the following requirements.

- The range and measurement category of the instrument must suit the voltage and conditions of the installation.
- Connect the instrument correctly to avoid arcing and other hazards.

1.2 Operation and Maintenance Requirements

High temperatures and high voltages are present inside the UPS. Comply with the relevant safety regulations and operation procedures during installation, operation and maintenance to avoid human injury or device damage. The safety precautions in this manual only supplement the local safety regulations. AEC accepts no liability for consequences of violating general safety requirements or the safety standards for the design, manufacture and use of the device.

⚠ CAUTION

Operation and wiring of the UPS must be carried out by qualified professionals, and the electrical installation must comply with the applicable wiring regulations.

Installation and maintenance personnel must be trained, know all safety notices and the correct operating methods before carrying out installation, operation or maintenance.

⚠ DANGER

Never connect or disconnect power cables while the power is on. Switch off the power switches before connecting or disconnecting power cables. Before connecting, make sure that the cable connections and cable labels match the actual installation.

⚠ WARNING

Touching high voltage directly or through damp objects is lethal.

- Only authorised professionals may open the UPS enclosure! The input and output of the UPS carry dangerous high voltage. Touching high voltage is lethal.

- Before maintenance, disconnect the AC supply and the battery to isolate all inputs. Measure the input, output and battery terminal bars with a voltmeter to make sure the power is disconnected and the UPS is safe.
- Even when all external power is disconnected, the internal capacitors remain charged and the output terminal bars may carry a lethal high voltage. Wait long enough (≥10 min) for the charge to dissipate before opening the UPS enclosure.
- The battery circuit is not isolated from the AC input. Dangerous voltage can be present between the battery terminals and earth. Take care of insulation when installing and using the battery.
- Do not wear conductive objects such as watches, bracelets or rings while working.
- Installation and maintenance must be carried out only by qualified electricians trained on this UPS. Maintenance and repair of the power system may only be carried out by professionals.
- High leakage current: earth connection essential before connecting the supply. The earthing terminal must be connected to earth.

⚠ WARNING

Do not drill holes in the cabinet! Drilling can damage internal components, and metal swarf can short-circuit the circuit boards.

NOTE

Any change to the UPS configuration, structure or assembly affects UPS performance. Consult AEC before making any change.

1.3 Environment Requirements

The operating environment affects the service life and reliability of the device. Avoid prolonged use in the following environments:

- Places outside the specification (operating temperature: -5 °C to 40 °C, relative humidity: 0% to 95%).
- Places exposed to direct sunlight or rain.
- Places subject to vibration or impacts.
- Places with dust, corrosive substances, salt or flammable gases.
- Enclosed or poorly ventilated places.

CHAPTER 2

02 Overview

This chapter describes the applications, features, working principle and operating modes, appearance and layout, and alarms of the UPS.

IN THIS CHAPTER

2.1 Product Introduction
2.2 Work Principle
2.3 Appearance and Structure
2.4 Optional Accessory
2.5 Alarm Function

THE UPS AT A GLANCE



Front: touch screen



Door open: units and switches



Rear

2.1 Product Introduction

This series is a high-frequency, online double-conversion UPS with sine-wave output, designed for data centres, computer rooms and precision instruments in finance, telecommunications, insurance, transport, defence, security, energy, education, government and industry.

2.1.1 Product Features

THREE-LEVEL INVERSION TECHNOLOGY

Three-level inverter technology improves the output voltage waveform and the overall efficiency of the UPS.

COMPLETELY DIGITALIZED DSP CONTROL

A digital DSP controls the inverter, phase synchronisation, output current sharing and power-unit logic, giving high precision, fast response and excellent overall system performance.

ENERGY CONSERVATION AND HIGH EFFICIENCY

Advanced PFC control gives an input power factor greater than 0.99, which makes better use of electrical energy, reduces the load on the grid and saves power-distribution costs. The UPS is compact and light, with low heat dissipation and a small footprint, which reduces the investment cost.

SMART FAN SPEED CONTROL

The fan speed is adjusted automatically to the load, which extends fan life and reduces noise.

ECO ENERGY CONSERVATION MODE DESIGN

The UPS has an ECO energy-saving mode. When the mains quality is good, the UPS in this mode supplies the load preferably from the bypass, and the efficiency can reach 99%. When the bypass voltage or frequency is outside the normal range and no longer meets the load requirements, the UPS transfers to inverter output. This ensures reliable power supply while saving energy.

MANUAL MAINTENANCE BYPASS DESIGN

A manual maintenance bypass keeps the load supplied during maintenance, which greatly improves system reliability and maintainability.

RELIABLE EMC PERFORMANCE

EMC tested by accredited laboratories: conducted and radiated emissions, conducted and radiated immunity, voltage dips, burst, electrostatic discharge, surge, etc. Its EMC design filters mains disturbances and effectively limits the UPS's own emissions (IEC 62040-2, category C3).

TOUCH SCREEN DISPLAY

The touch screen makes daily operation, management and maintenance simple. It displays the operating parameters and status of the UPS and of each power unit, and records event and alarm history (up to 10,000 records).

2.2 Work Principle

2.2.1 Work Principle Diagram

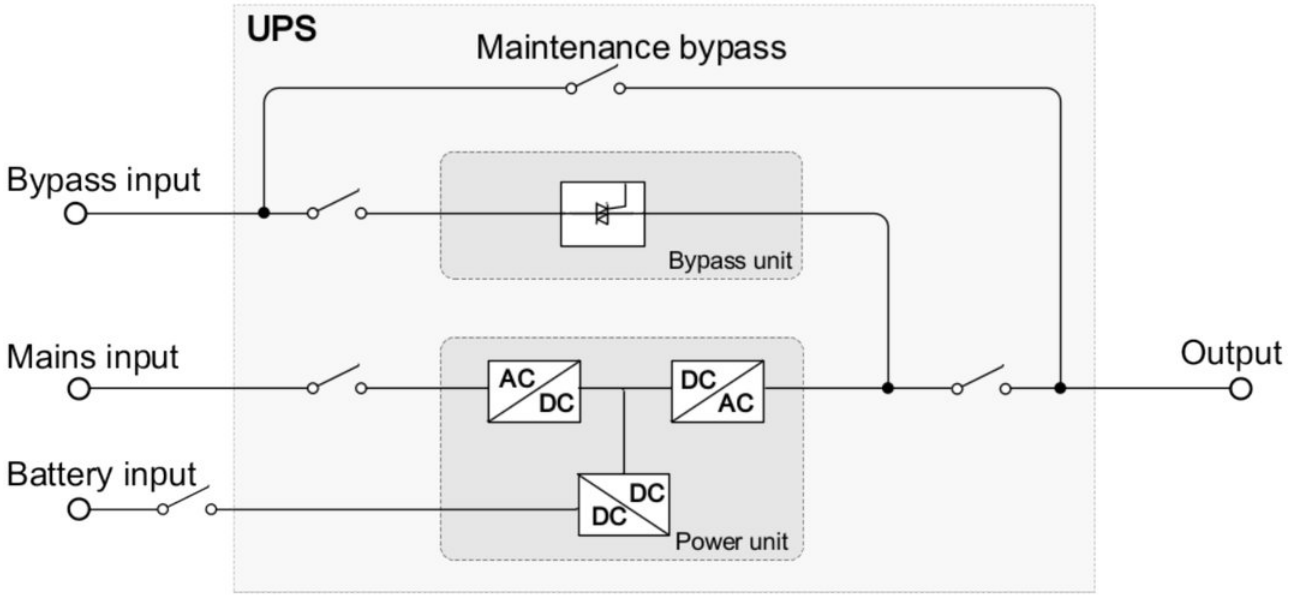

FIGURE 2-1 Work principle diagram

2.2.2 Work Mode

HOW IT WORKS **Operating modes at a glance**

Normal (online) mode

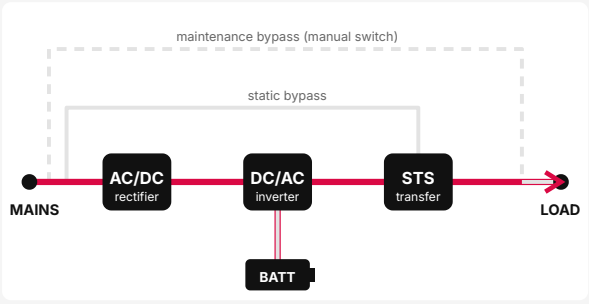

Mains present: the rectifier and the inverter supply the load with regulated power; the battery is kept charged.

Battery mode

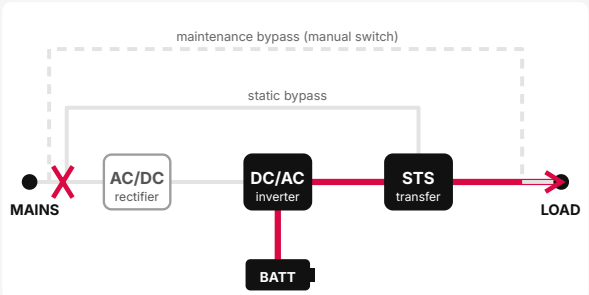

Mains outside its limits or missing: the battery feeds the inverter, with no break for the load.

Bypass mode

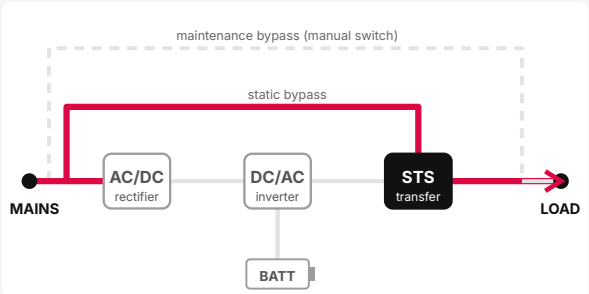

Overload, fault or inverter off: the load is supplied from the mains through the static bypass.

ECO mode

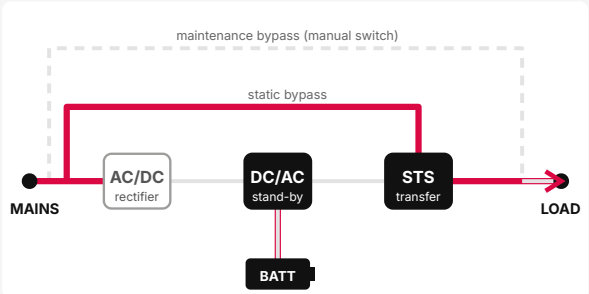

Mains inside the ECO window: the load runs on the bypass for the highest efficiency; the inverter takes over if the mains goes out of range.

Maintenance bypass

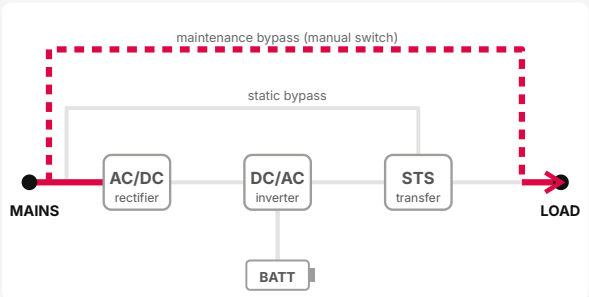

For service: the load is fed from the mains by the manual switch and the UPS can be switched off. Hazardous voltage stays on the terminals.

power flow working idle

The UPS has 4 basic operating modes: normal mains mode, battery mode, bypass mode and maintenance bypass mode.

NORMAL MAINS MODE

When the mains is normal, the PFC rectifier converts the AC power into DC power, which supplies the inverter. While doing so, the rectifier removes mains disturbances, noise and frequency instability, so that the inverter supplies stable, clean power to the load. The process is as follows.

When the mains is normal, the rectifier inside the power unit converts the mains into a positive and negative DC voltage; the inverter then supplies a stable 230 Vac output. When the system control card detects that the inverter is normal, the inverter output is connected to the load.

BATTERY MODE

When the mains fails, the system switches to battery input: the boost circuit raises the battery voltage to the required DC bus value and supplies the inverter, so that the AC output is not interrupted and the load is protected. The process is as follows.

Whenever the mains fails, the rectifier switches immediately to battery input to keep the DC bus voltage, so that the inverter is not interrupted. If the mains returns before the battery is fully discharged, the rectifier switches back to mains input and recharges the battery at the same time. The inverter output is not interrupted during the transfer between mains and battery.

In battery mode, if the mains does not return and the battery is running out, the UPS gives an audible and visual alarm, stops at the end-of-discharge point and beeps continuously. The load is then no longer supplied.

BYPASS MODE

If a system fault (such as over-temperature, short circuit, abnormal output voltage or overload) exceeds the tolerance, the inverter shuts down automatically to avoid damage. If the mains is still normal, the load is transferred to the bypass. The process is as follows.

If an inverter fault or an inverter overload exceeds the tolerance, the UPS transfers to bypass output. When the fault or overload has been removed, the UPS restarts the inverter and supplies the load again. If the overload is so severe that it exceeds the bypass tolerance, the UPS switches off the bypass output and the load is no longer supplied. In case of a load fault or short circuit, the UPS transfers the load from the inverter to the bypass. With a severe short circuit, the UPS input switch and bypass switch may trip. After a short circuit the UPS tries to restart: if the short circuit has been removed, the UPS transfers back to the inverter; if not, the UPS tries to restart 3 times. After 3 failed attempts the UPS locks out (fault protection); switch it off (power off, or shut down from the touch screen) and restart it to resume normal operation.

MAINTENANCE BYPASS MODE

When the UPS needs maintenance and the load supply must not be interrupted, shut down the inverter so that the UPS runs on bypass, then switch on the maintenance bypass switch and switch off the mains input switch, the bypass switch and the output switch. The load is then supplied with AC power through the maintenance bypass switch. The power units are then de-energised. The input and output terminals, the bypass busbars and the maintenance bypass switch remain live. Wait at least 10 minutes and check with a voltmeter before any work.

2.3 Appearance and Structure

2.3.1 Appearance

The appearance of the UPS is shown in Figure 2-2 and Figure 2-3.

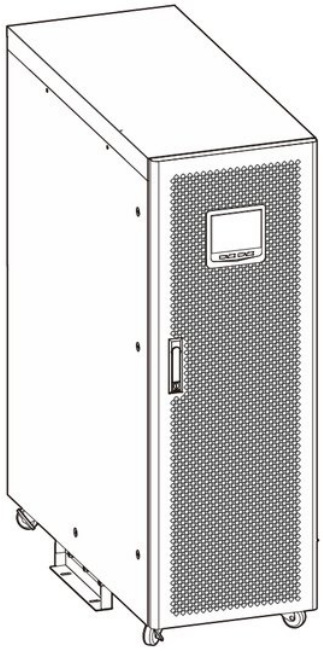

FIGURE 2-2 Appearance of 60K, 80K, 100K, 120K

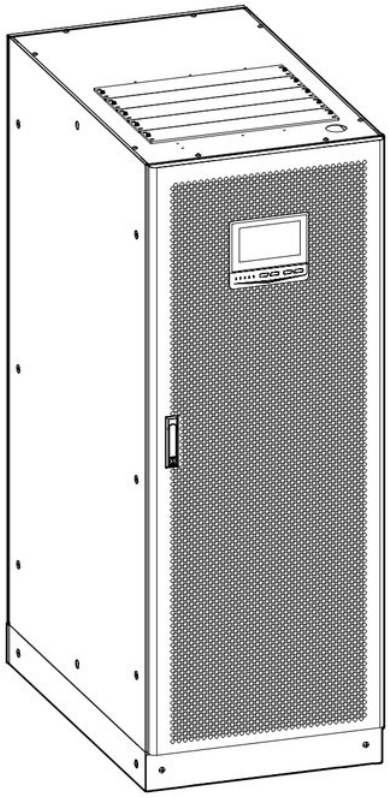

FIGURE 2-3 Appearance of 160K, 200K

OPERATION PANEL

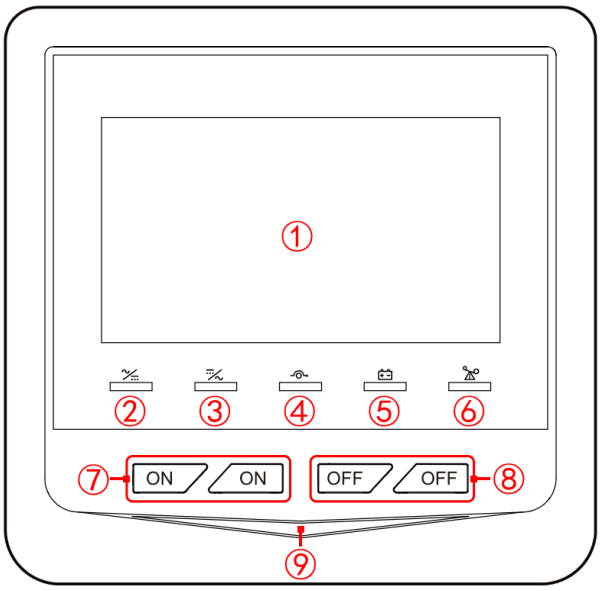

FIGURE 2-4 Operation panel of 60K, 80K, 100K, 120K

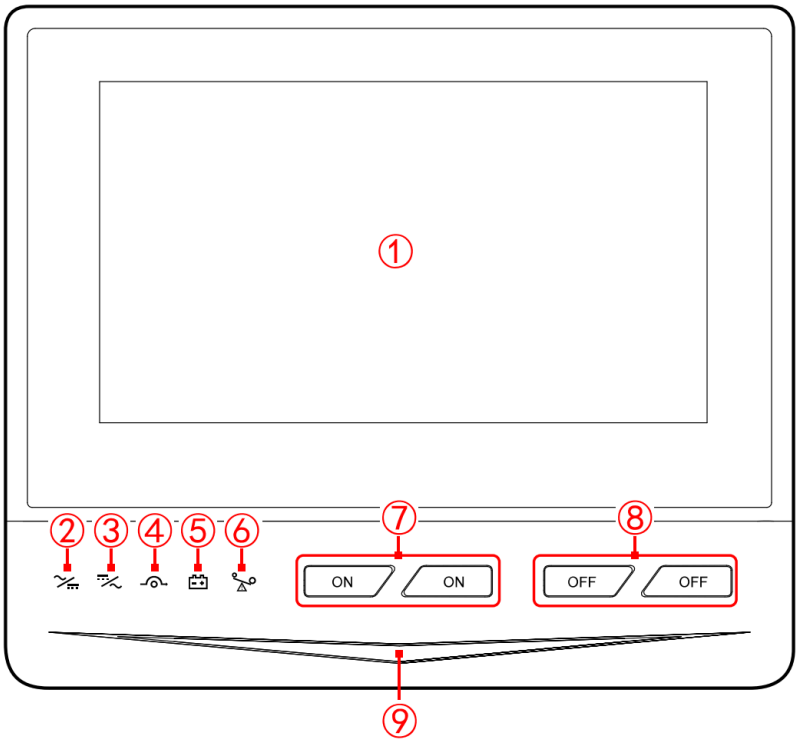

FIGURE 2-5 Operation panel of 160K, 200K

TABLE 2-1 Illustration for the operation panel

No.	Mar	Name	Illustration
-		Touch screen	Shows the running parameters (such as voltage, current, load, etc.) and status
	⎓	AC/DC indicator	On (green): rectifier works normally. On (red): rectifier abnormal.
⎓		DC/AC indicator	On (green): inverter works normally. On (red): inverter abnormal.
		BYP. indicator	On (green): bypass output. On (red): bypass abnormal.
	✚	BATT. LOW indicator	On (green): battery mode. On (red): battery is low-voltage.
	◘	OVERLOAD indicator	On (green): output normally. On (red): output is overload.
ON		**ON** combination button	Press both buttons for 3 s; the system will power on.
OFF		**OFF** combination	Press both buttons for 3 s; the system will power off.

No. Marking	Name	Illustration
	button	
-	Ambient light bar	On (blue): UPS works normally. Flashing (blue): battery mode. On (yellow): UPS alarm, the UPS is still operating. On (red): UPS fault, the UPS is not operating.

2.3.2 Structure Layout

The internal layout of the UPS is shown in Figure 2-6 and Figure 2-7; the parts are listed in Table 2-2.

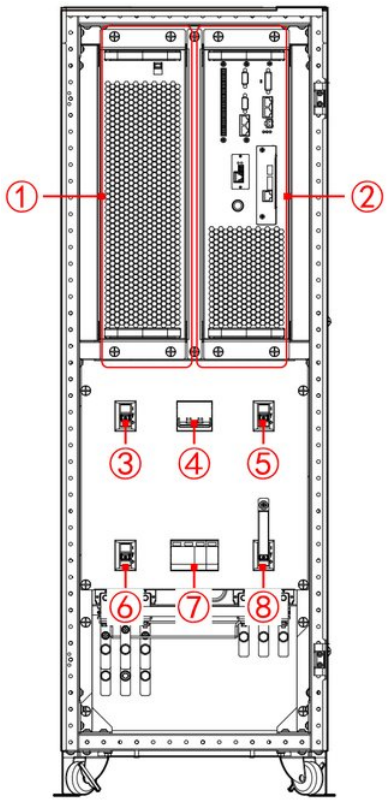

FIGURE 2-6 Structure layout diagram of 60K, 80K, 100K, 120K(open the door)

> **NOTE**
>
> The ratings of the mains switch, output switch, bypass switch and maintenance bypass switch differ slightly between 60K, 80K, 100K and 120K. The figure above shows the 60K; for details, refer to the actual product.

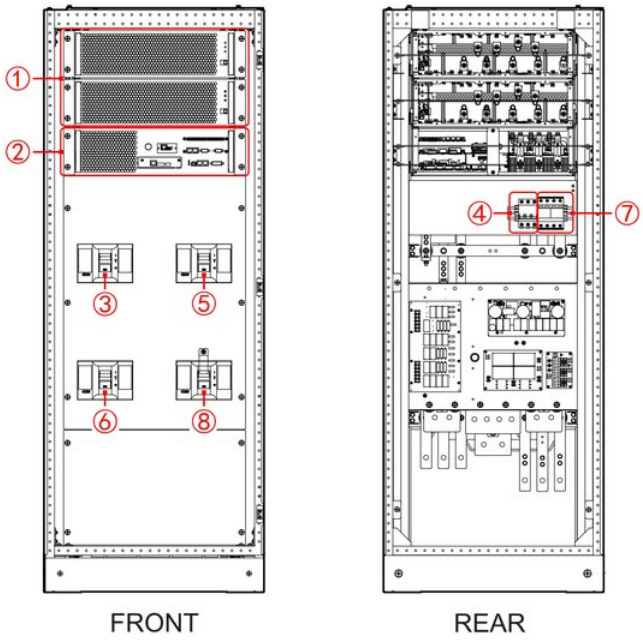

FIGURE 2-7 Structure layout diagram of 160K, 200K (open the door)

TABLE 2-2 Structure illustration

NO. Name	NO.	Name
Power unit		Output switch
Bypass unit		Bypass switch
Mains switch		SPD(optional)
SPD switch(optional)		Maintenance bypass switch

POWER UNIT

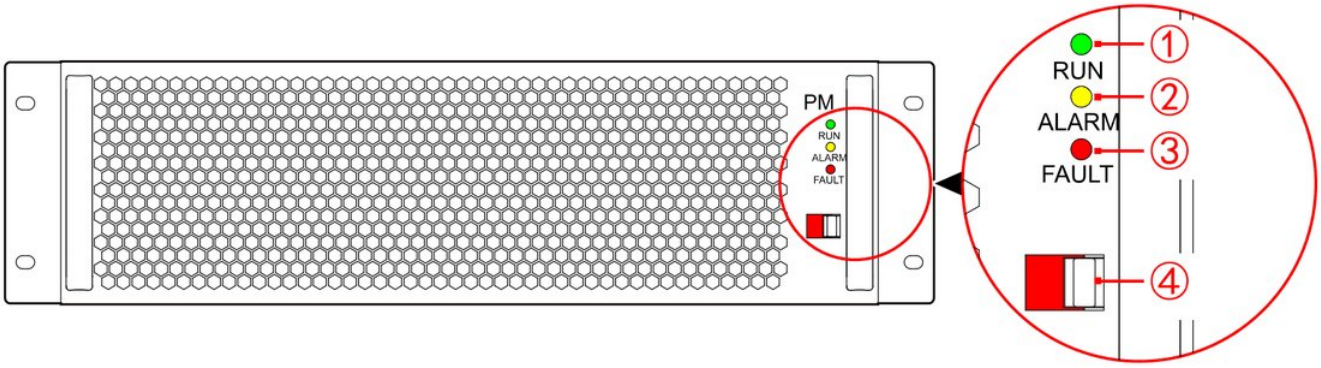

FIGURE 2-8 Power unit

TABLE 2-3 Power unit illustration

NO. Marking	Name ation	
RUN	Run indicator On	(gr running normally.
ALARM	Alarm indicator On	(ye alarm.
FAULT	Fault indicator On d):	fault.
-	On d): Limit switch On	running. (gr exit.

BYPASS UNIT

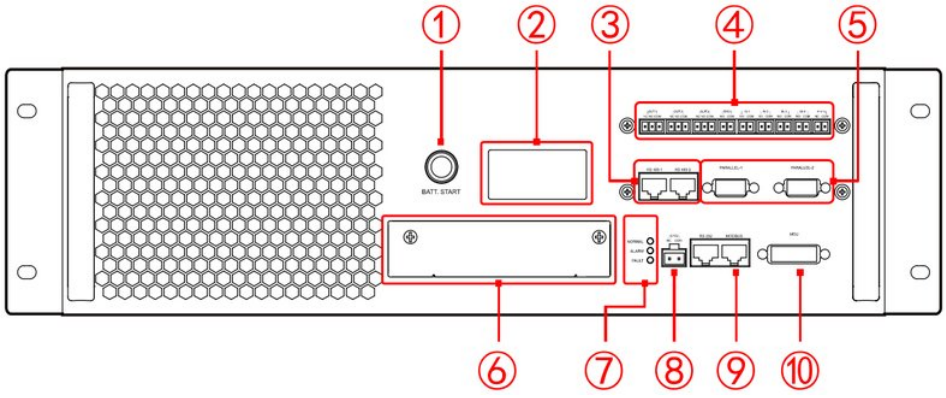

FIGURE 2-9 Bypass unit

TABLE 2-4 Bypass unit illustration

NO. Name		Illustration
BATT. rt	button	Battery cold start function.
SNMP d	slot	Optional SNMP card, for details see 2.4.1 SNMP Card and Its Software.
RS485 rt		Used by one unit to monitor the operating data of the other units of a parallel system. The RS485 port uses an RJ45 connector; its pin assignment is shown in Figure 2-10. RS485 wiring in a parallel system is shown in Figure 2-11 and Figure 2-12.
Dry ct	port	See Table 2-5; for the dry-contact functions see Table 2-6 and Table 2-7.
PARALLEL	port	Parallel cables connect the parallel ports of the cabinets. When several UPSs are paralleled, connect the parallel ports of all UPSs

NO.	Name		Illustration
			with parallel cables. N UPSs require N parallel cables, so that each UPS has at least two parallel cables, which improves the reliability of the parallel system.
	Expansion card slot		Optional BMS expansion card and dry-contact expansion card; see 2.4.2 Expansion Cards.
	Indicator	NORMAL (green)	On: system control card running as the master card. Flashing: system control card initialising.
		ALARM (yellow)	On: system control card alarm.
		FAULT (red)	On: system control card fault.
	EPO2 input dry contact		Normally closed input for an external EPO. The signal is active when the NC and COM terminals are open. The function is fixed and cannot be set.
	MODBUS port and RS232 port		Supports MODBUS RTU or the standard serial protocol, selectable on the touch screen. The MODBUS/RS232 ports use RJ45 connectors; the pin assignments are shown in Figure 2-13 and Figure 2-14.
	MDU port		Touch screen communication port.

- RS485 port

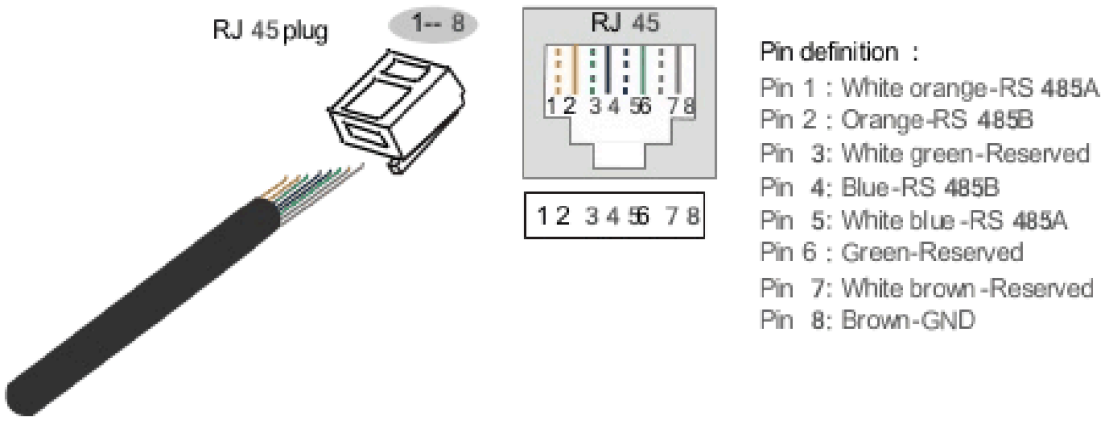

FIGURE 2-10 Pin definition of RS485

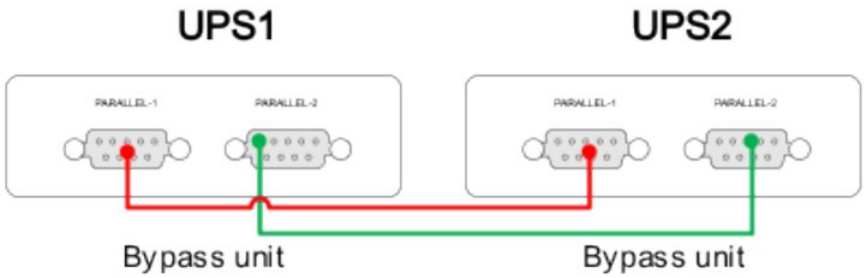

FIGURE 2-11 RS485 port wiring(Two UPSs)

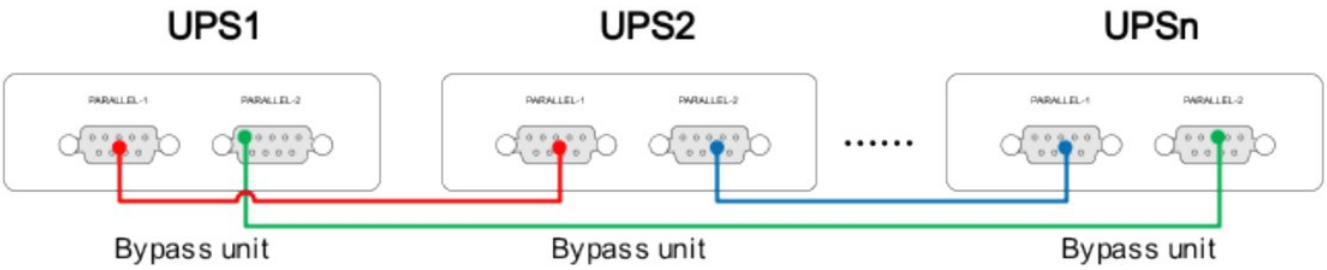

FIGURE 2-12 RS485 port wiring(Multiple UPSs)

> **NOTE**
> The wire colours in Figure 2-11 and Figure 2-12 are for illustration only and do not represent the actual wire colours.

- Network port: MODBUS port and RS232 port

1. The MODBUS port is used for MODBUS serial communication with a supervisory computer. It uses an RJ45 connector; the pin assignment is shown in Figure 2-13.

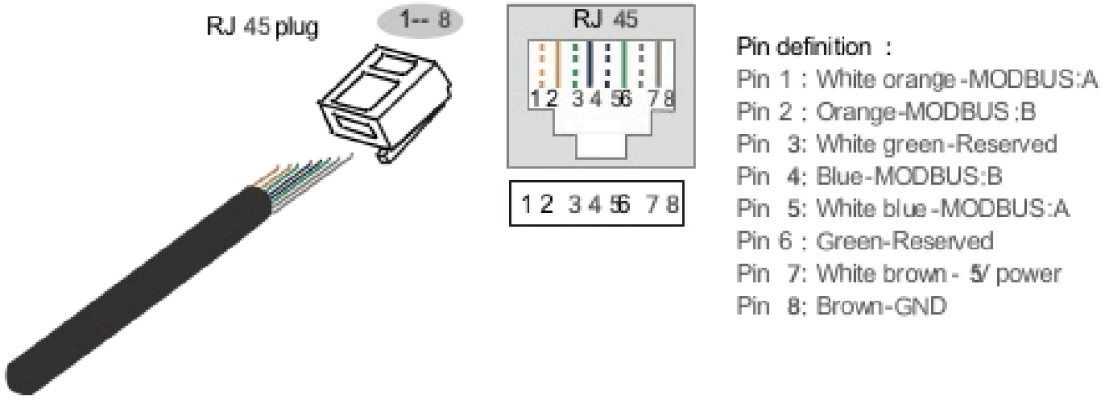

FIGURE 2-13 Pin definition of MODBUS

1. The RS232 port is used for RS232 serial communication with an external SNMP card. It uses an RJ45 connector; the pin assignment is shown in Figure 2-14.

- Dry contact port

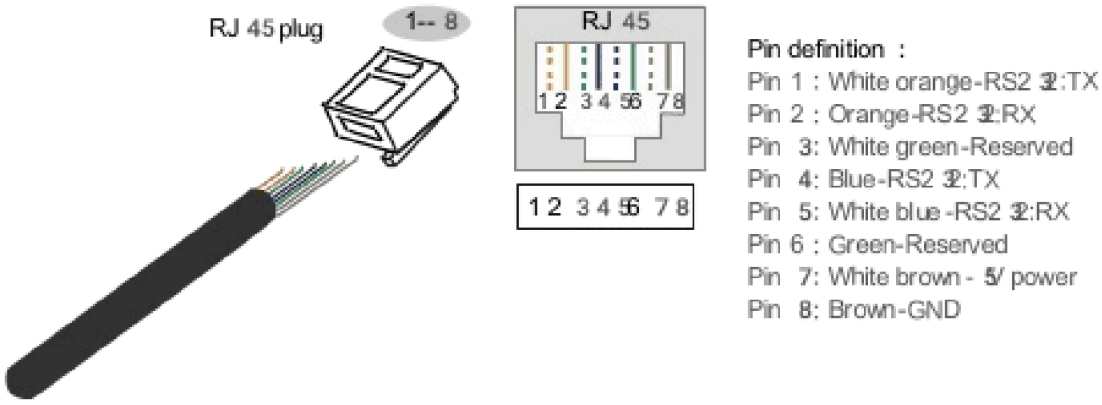

FIGURE 2-14 Pin definition of RS232

TABLE 2-5 Dry contact illustration

Port	Marking	Signal	Function illustration
EPO1	NO	External EPO normally open port	The signal is active when NO and COM are shorted. The function is fixed and cannot be set.
	COM	Common terminal (reinforced insulation from mains)	
B-Temp	NC	Battery temperature sensor (resistor) input	External temperature sensor cable. The function is fixed and cannot be set.
	COM	Common terminal (reinforced insulation from mains)	
EPO2	NC	External EPO normally closed port	The signal is active when NC and COM are open. The function is fixed and cannot be set. (EPO1 NO contact recommended. To use the EPO2 NC contact, contact AEC service first.)
	COM	Common terminal (reinforced insulation from mains)	
OUT.1	NC	OUT.1 normally closed output port	When the signal is active, COM-NO closes and COM-NC opens. This signal is settable, as shown in Table 2-7.
	COM	Common terminal (reinforced insulation from mains)	
	NO	OUT.1 normally open output port	
OUT.2	NC COM	OUT.2 normally closed output port Common terminal (reinforced insulation from mains)	When the signal is active, COM-NO closes and COM-NC opens. This signal is settable, as shown in Table 2-7.
NO	OUT.2 normally open output port		
OUT.3	NC	OUT.3 normally closed output port	When the signal is active, COM-NO closes and COM-NC opens. This signal is settable, as shown in Table 2-7.
	COM	Common terminal (reinforced insulation from mains)	
	NO	OUT.3 normally open output port	
IN.1	NO	External switch normally open input port	The signal is active when NO and COM are shorted. This signal is settable, as shown in Table 2-6.
	COM	Common terminal (reinforced insulation from mains)	
IN.2	NO	External switch normally open input port	The signal is active when NO and COM are shorted. This signal is settable, as shown in Table 2-6.
	COM	Common terminal (reinforced insulation from mains)	
IN.3	NO	External switch normally open input port	The signal is active when NO and COM are shorted. This signal is settable, as shown in Table 2-6.
	COM	Common terminal (reinforced insulation from mains)	
IN.4	NO	External switch normally open input port	The signal is active when NO and COM are shorted. This signal is settable, as shown in Table 2-6.
	COM	Common terminal (reinforced insulation from mains)	

The input ports (IN) can be assigned to one of the 10 functions listed in Table 2-6, according to user requirements.

The output ports (OUT) can be assigned to one of the 18 functions listed in Table 2-7, according to user requirements.

TABLE 2-6 Input dry contact definition

NO.	Dry contact definition	Remarks
1	Battery abnormal	When this signal is received, the UPS raises an alarm, records the status and disables charging.
2	Battery grounding abnormal	Grounding abnormal signal
3	Battery switch disconnect	Battery circuit switch auxiliary contact mark.
4	Bypass switch disconnect	Bypass switch auxiliary contact mark.
5	Output switch disconnect	Output switch auxiliary contact mark.
6	Battery discharge disable	Battery discharge disable mark.
7	Battery charge disable	Battery charge disable mark
8	Generator mode	Starts the generator mode (for use with automatic generator operation).
9	SPD abnormal	The UPS records an SPD fault.
10	Maintenance bypass start	Start maintenance bypass mark.

TABLE 2-7 Output dry contact definition

NO.	Dry contact definition	Remarks
1	Inverter output	UPS is in the inverter output status, and this dry contact is ON.
2	Bypass output	UPS is in the bypass output status, and this dry contact is ON.
3	Battery trips	Battery trips, and this dry contact is ON.
4	Battery output	UPS is in the battery power supply status, and this dry contact is ON.
5	Battery under-voltage alarm	Battery discharges to the under-voltage alarm, and this dry contact is ON.
6	Battery under-voltage protection	Battery discharges to the under-voltage protection status, and this dry contact is ON.
7	Output overload	UPS is in the overload status, and this dry contact is ON.
8	UPS abnormal	Abnormal status, and this dry contact is ON.
9	Bypass abnormal	Bypass is abnormal or it's unable to track bypass, and this dry contact is ON.
10	Mains abnormal	Mains is abnormal, and this dry contact is ON.
11	Start generator	When the generator is started, this dry contact is ON.
12	ECO output	UPS is in the ECO output status, and this dry contact is ON.
13	Inverter abnormal	When the UPS inverter is abnormal, this dry contact is ON.
14	Single bypass feedback	When single bypass backfeed is detected, this dry contact is ON.
15	Parallel bypass feedback	When parallel bypass backfeed is detected, this dry contact is ON.
16	UPS power on	When the UPS is powered on, this dry contact is ON.
17	Fan abnormal	When a UPS fan is abnormal, this dry contact is ON.
18	UPS alarm	When the UPS has an alarm, this dry contact is ON.

NOTE

The single bypass feedback and parallel bypass feedback functions in Table 2-7 are available on request (customised).

CAUTION

Connect the dry-contact ports only to SELV circuits. Never connect mains or other hazardous voltages: this can damage the device and endanger persons.

2.4 Optional Accessory

The UPS can be fitted with various accessories to meet different user needs.

2.4.1 SNMP Card and Its Software

The SNMP card (Figure 2-15) is installed in the UPS for remote management.

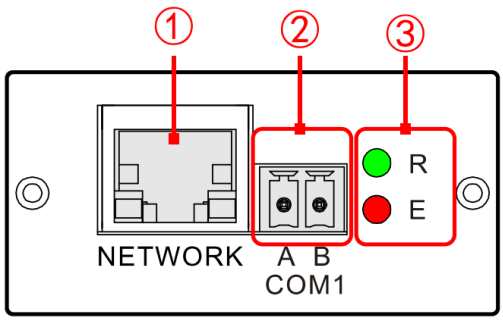

FIGURE 2-15 SNMP card

NOTE

If the SNMP card is ordered, it is installed on the bypass unit of the UPS.

TABLE 2-8 Illustration of SNMP card

NO.	Name		Function description
	NETWORK port		Ethernet port
	COM1 port		Connection to a temperature/humidity sensor (RS485)
	Indicator	R	Show working status, details as shown in Table 2-9.
		E	

- NETWORK port

The NETWORK port uses an RJ45 connector; its pin assignment is shown in Figure 2-16.

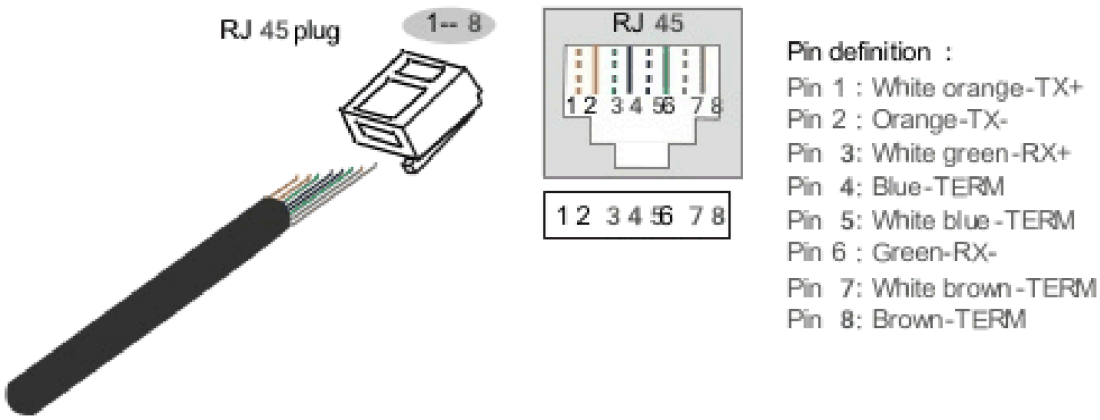

FIGURE 2-16 Pin definition of NETWORK port

- Indicator status

TABLE 2-9 Illustration of indicator of the SNMP card

Green indicator (R)	Red indicator (E)	Status description
ON	ON	Start
Flicker	*	Running
OFF/ON	*	Crash, keep final status
*	OFF	NO alarm
*	Flicker	Alarm

> **NOTE**
> * = any indicator state.

SNMP CARD SOFTWARE

> **NOTE**
> Supported browsers include Chrome 56+ and IE 11+ (older operating systems may have compatibility problems). The login page differs between browsers. A screen resolution higher than 1600 × 900 is recommended.

> **CAUTION**
> Make sure that the IP address set on the SNMP card is in the same network segment as the IP address of the user's computer.

After installing and wiring the SNMP card, configure the software as follows.

PROCEDURE

1. Open a browser and enter the IP address of the SNMP card (default IP: 192.168.0.100).

> **NOTE**
> If the IP address of the SNMP card has been changed, or if several SNMP cards are used, the IP addresses can be found with the SNMP card discovery software; see the AEC SNMP card manual.

2. Enter the user name and password in the login page and click **Login** to enter the monitoring page.

> **NOTE**
> Default user name is admin; the default password is given in the AEC SNMP card manual.

2.4.2 Expansion Cards

DRY CONTACT EXPANSION CARD

The dry-contact expansion card (Figure 2-17) provides additional signal inputs and outputs: three input dry contacts and two output dry contacts, described in Table 2-10.

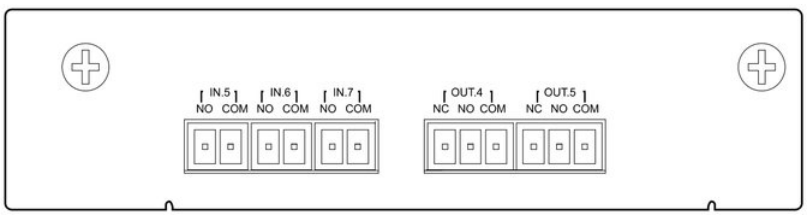

FIGURE 2-17 Dry contact expansion card

NOTE

If the dry-contact expansion card is ordered, it is installed on the bypass unit of the UPS.

TABLE 2-10 Illustration of the dry contact

Port	Mark al		Illustration
OUT.4	NC.4	normally closed output port	When the signal is active, COM-NO closes and COM-NC opens. This signal is settable.
	COM from	Com terminal (reinforced insulation mains)	
	NO.4	normally open output port	
OUT.5	NC.5	normally closed output port	When the signal is active, COM-NO closes and COM-NC opens. This signal is settable.
	COM from	Com terminal (reinforced insulation mains)	
	NO.5	normally open output port	
IN.5	NO rnal	switch normally open input port	The signal is active when NO and COM are shorted. This signal is settable.
	COM	Com terminal (reinforced insulation	

Port	Mark	Signal	Illustration
		from mains)	
IN.6	NO	External switch normally open input port	The signal is active when NO and COM are shorted. This signal is settable.
	COM	Common terminal (reinforced insulation from mains)	
IN.7	NO	External switch normally open input port	The signal is active when NO and COM are shorted. This signal is settable.
	COM	Common terminal (reinforced insulation from mains)	

The functions that can be assigned to the input and output dry contacts are listed in Table 2-6 and Table 2-7.

BMS EXPANSION CARD

The BMS expansion card (Figure 2-18) is used for communication with lithium batteries. It has one BMS communication port, two input dry contacts and one output dry contact, described in Table 2-11.

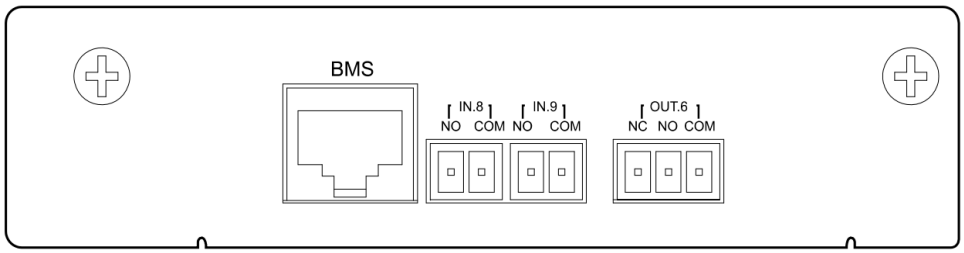

FIGURE 2-18 BMS expansion card

NOTE

If the BMS expansion card is ordered, it is installed on the bypass unit of the UPS.

NOTE

For reliability reasons, contact AEC service before using lithium batteries.

TABLE 2-11 Illustration of the BMS expansion card

Port	Mark	Signal	Illustration
BMS		BMS port	Communication with the lithium battery. The BMS port uses an RJ45 connector; its pin assignment is shown in Figure 2-19.
IN.8	NO	External switch normally open input port	The signal is active when NO and COM are shorted. This signal can be set to disable charging.
	COM	Common terminal (reinforced insulation from mains)	
IN.9	NO	External switch normally open input port	The signal is active when NO and COM are shorted. This signal can be set to disable discharging.
	COM	Common terminal (reinforced insulation from mains)	
OUT.6	NC	OUT.6 normally closed output port	When the signal is active, COM-NO closes and COM-NC opens. This port is reserved.
	COM	Common terminal (reinforced insulation from mains)	
	NO	OUT.6 normally open output port	

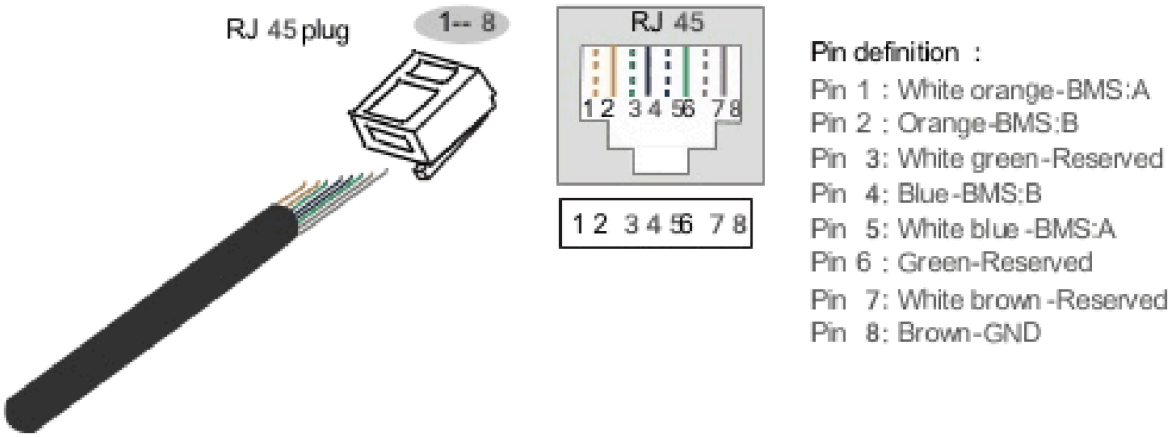

FIGURE 2-19 Pin definition of BMS port

2.4.3 Parallel/BCS System Accessory

The parallel/BCS accessories connect the parallel/BCS ports of the cabinets.

When several UPSs are paralleled, connect the parallel ports of all UPSs with parallel cables. N UPSs require N parallel cables, so that each UPS has at least two parallel cables, which improves the reliability of the parallel system.

The BCS (dual-bus synchronisation control) is used in a dual-bus system to synchronise the output frequency and phase of the two systems, so that the load can be transferred between the two buses.

> **NOTE**
> The parallel wires are configured.

PARALLEL SYSTEM CONNECTION

- Two UPSs
- Multiple UPSs

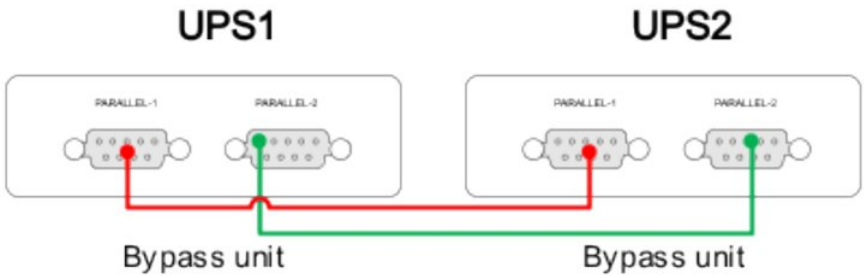

FIGURE 2-20 Parallel system connection(Two UPSs)

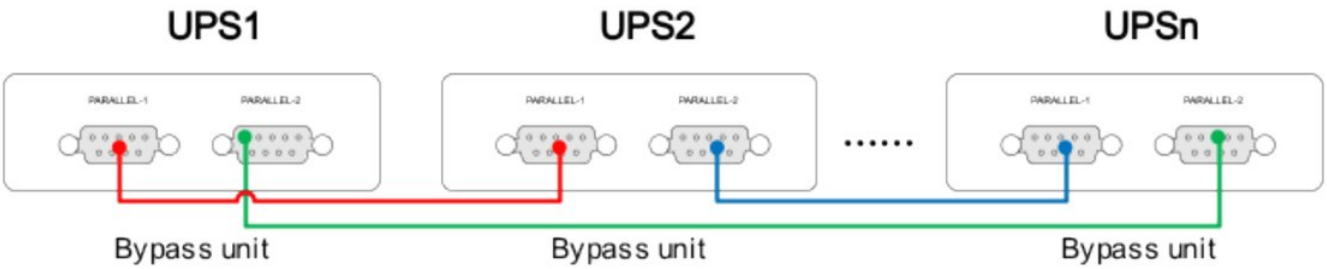

FIGURE 2-21 Parallel system connection(Multiple UPSs)

> **NOTE**
> The wire colours in Figure 2-20 and Figure 2-21 are for illustration only and do not represent the actual wire colours.

2.4.4 Battery Temperature Compensation

Battery temperature compensation monitors the battery temperature and adjusts charging and discharging accordingly.

> **NOTE**
> If the battery temperature compensation option is ordered, it is supplied with one temperature sensor cable, one sensor extension cable and one green 2-pin terminal.

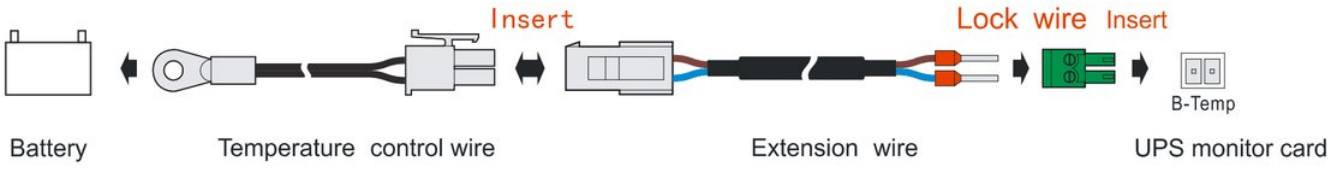

FIGURE 2-22 Battery temperature compensation connection

> **NOTE**
> Fix the temperature sensor in the warmest area of the battery installation.

2.4.5 Surge Protection Device

If the UPS is installed in an area exposed to lightning, install surge protection at the mains inlet to ensure safe operation. The UPS can be fitted with a class C surge protection device (SPD), available as an option.

> **NOTE**
> The lightning protection facilities are configured.

2.4.6 Battery Release Control Accessory

If a battery breaker release is required, the battery release control accessory must be added. Its 24 V DC output is switched by a dry contact, so it can drive either a shunt-trip or an under-voltage release.

> **NOTE**
> The output of the control accessory is 24 V DC: use only releases with a 24 V DC coil.

2.5 Alarm Function

When the UPS detects an abnormal condition, it gives an audible and visual alarm. The alarms and protections are listed in Table 2-12.

TABLE 2-12 Abnormal status and alarm/protection function

Fault	Information	Protect requirement	Alarm requirement
Mains fault	Mains abnormal	Mains power supply is not allowed.	Buzzer slowly beeps, the AC/DC indicator on the operation panel turns red, the mains icon on the touch screen turns red, and the yellow ambient light bar steady on.
	Mains over-voltage		
	Mains under-voltage		
	Mains unbalance		
	Mains over-frequency		
	Mains under-frequency		
	Mains power down		
	Mains phase loss		
	Mains phase sequence abnormal		
	Large mains harmonic		
	Mains drop		
	Mains input PFC overload		
	Mains neutral wire loss		
	Large mains DC component		
Battery fault	Battery abnormal	Battery power supply is not allowed.	Buzzer fast beeps, the BATT. LOW indicator on the operation panel turns red, the battery icon on the touch screen turns red, and the yellow ambient light bar steady on.
	Battery polarity reversed		
	Battery over-voltage		
	Charger over-current		
	Battery circuit abnormal		
	Bypass under-voltage protection		
	Bypass overload		
Bypass	Bypass abnormal	Bypass output is not	Buzzer slowly beeps, the "

TABLE 2-12 Abnormal status and alarm/protection function *(continued)*

Fault	Information	Protect requirement	Alarm requirement
fault	Bypass over-voltage	allowed.	" BYP. indicator on the operation panel turns red, and the bypass icon on the touch screen turns red, and the yellow ambient light bar steady on.
	Bypass under-voltage		
	Bypass unbalance		
	Bypass over-frequency		
	Bypass under-frequency		
	Bypass power down		
	Bypass phase loss		
	Bypass phase sequence abnormal		
	Large bypass harmonic component		
	ECO power down detection	ECO output is not allowed.	Buzzer slowly beeps, and the yellow ambient light bar steady on.
	ECO over-voltage		
	ECO under-voltage		
	ECO over-frequency		
	ECO under-frequency		
Output fault	Inverter output abnormal	Inverter output is not allowed.	Buzzer long beeps, the DC/AC indicator on the operation panel turns red, and the output icon on the touch screen turns red, and the red ambient light bar steady on.
	Output short circuit		
	Inverter over-voltage		
	Inverter under-voltage		
	Output circuit abnormal	None	Buzzer slowly beeps, the DC/AC indicator on the operation panel turns red, and the output icon on the
			touch screen turns red, and the red ambient light bar steady on.
	Low output PF	Inverter output is not allowed.	Buzzer long beeps, the DC/AC indicator on the operation panel turns red, and the output icon on the touch screen turns red, and the red ambient light bar steady on.
	Large output current DC component		

TABLE 2-12 Abnormal status and alarm/protection function *(continued)*

Fault	Information	Protect requirement	Alarm requirement
System fault	System fault	None	Buzzer long beeps and the red ambient light bar steady on.
	System EPO on	Bypass output and inverter output are not allowed.	
	System bypass abnormal	None	
	System inverter abnormal	None	
	EPO on	Bypass output and inverter output are not allowed.	
	Bypass overload protection	Bypass output and inverter output are not allowed.	Buzzer long beeps, the OVERLOAD indicator on the operation panel turns red, and the output icon on the touch screen turns red, and the red ambient light bar steady on.
	Bypass SCR abnormal	Bypass output is not allowed	Buzzer long beeps, the BYP. indicator on the operation panel turns red, the bypass icon on the touch screen turns red, and the red
			ambient light bar steady on.
	Parallel wire abnormal	Inverter output is not allowed	Buzzer long beeps, and the red ambient light bar steady on.
	Parallel system sovereignty fault	None	Buzzer long beeps, and the red ambient light bar steady on.
	Inverter overload protection	Inverter output is not allowed	Buzzer long beeps, the OVERLOAD indicator on the operation panel turns red, the output icon on the touch screen turns red, and the red ambient light bar steady on.
	Maintenance bypass on	Inverter output is not allowed	Buzzer long beeps, and the red ambient light bar steady on.
	Battery charge disabled on	None	Buzzer fast beeps, the BATT. LOW indicator on the operation panel turns red, the battery icon on the touch screen turns red, and the red ambient light bar steady on.
	Battery discharge disabled on	None	
Cabinet fault	Cabinet fault	None	Buzzer long beeps, and the red ambient light bar steady on.
	Bypass over-temperature	Bypass output depends on the "bypass over-temperature enable" setting.	Buzzer long beeps, the BYP. indicator on the operation panel turns red, the bypass icon on the touch screen turns red, and the red ambient light bar steady on.

TABLE 2-12 Abnormal status and alarm/protection function *(continued)*

Fault	Information	Protect requirement	Alarm requirement
	Inverter output over-current	None	Buzzer long beeps, and the red ambient light bar steady on.
	Rectifier abnormal self-locking	None	
	Inverter abnormal self-locking	None	
	Battery overload protection	None	
	Battery discharge protection end	None	
	UPS abnormal	None	
Cabinet pre-alarm	Cabinet pre-alarm	None	Buzzer fast beeps, and the yellow ambient light bar steady on.
	Cabinet over-temperature alarm	None	
	High battery temperature alarm	None	
	Low battery temperature alarm	None	
	Battery under-voltage alarm	None	
	Battery backup time insufficient	None	
	Output overload alarm	None	Buzzer fast beeps, the OVERLOAD indicator on the operation panel turns red, the output icon on the touch screen turns red, and the yellow ambient light bar steady on.
	Output frequency out of scope	None	Buzzer fast beeps, and the yellow ambient light bar steady on.
	Bypass auxiliary power abnormal	None	
	Bypass over-temperature alarm	None	
	Some power units PFC abnormal	None	
	Auto-restart on mains recovery disabled	None	
Cabinet	Cabinet abnormal	None	Buzzer slowly beeps, and the
alarm	Battery circuit disconnect	None	yellow ambient light bar steady on.
	Auxiliary power abnormal	None	
	Setting parameters mismatched	None	Buzzer slowly beeps, and the yellow ambient light bar steady on.
	Battery parameters mismatched	None	
	Unit number mismatch	None	
	Cabinet number mismatch	None	
	Flash abnormal.	None	
	Bypass output	None	
	Repeat slot address	None	
	System card n _ output status out of sync	None	
	Fan dedusting	None	

TABLE 2-12 Abnormal status and alarm/protection function *(continued)*

Fault	Information	Protect requirement	Alarm requirement
Startup fault alarm	Startup fault alarm	Static startup is not allowed to work.	Buzzer slowly beeps, and the yellow ambient light bar steady on.
	Reserved		
	Inverter output not possible: load too heavy		
	Waiting common inverter for unknown load		
	PFC software version mismatch		
	INV software version mismatch		
	CCM software version mismatch		
	Unit hardware version mismatch		
	Key parameters mismatched		
	Parallel address conflict		
	Unit serial version mismatch		
Component failure	Component failure	None	Buzzer slowly beeps, and the yellow ambient light bar steady on.
	Bypass 1 NTC failure		
	Bypass 2 NTC failure		
	Cabinet NTC failure		
	System card NTC failure		
	Bypass fan abnormal		
	Cabinet fan abnormal		
	Parallel wire 1 alarm		
	alarm Parallel wire 2		
	Monitor card is not installed		
	Bypass unit offline	Bypass output is not allowed.	Buzzer slowly beeps, the BYP. indicator on the operation panel turns red, and the bypass icon on the touch screen turns red.
	Expansion card offline	None	Buzzer slowly beeps.
	Bypass NTC failure		
Comm. abnormal alarm	Communication abnormal	None	Buzzer fast beeps, and the yellow ambient light bar steady on.
	Sync CAN inside cabinet abnormal		
	Equalized-current CAN inside cabinet abnormal		
	BMS communication fault		
	Display CAN inside cabinet abnormal		

TABLE 2-12 Abnormal status and alarm/protection function *(continued)*

Fault	Information	Protect requirement	Alarm requirement
	Parallel sync CAN abnormal		
	Parallel equalized-current CAN abnormal		
	Inner SCI communication abnormal		
Smart mode alarm	Smart mode alarm	None	Buzzer slowly beeps, and the yellow ambient light bar steady on.
	Start generator mode		
	Generator charge disabled		
	Only one BCS system has been detected.		
	The load exceeds the set safety load		
	UPS no redundancy		
	UPS redundancy insufficient		
	Cabinet no redundancy		
	Cabinet redundancy insufficient		
	System card no redundancy		
	Self-load switch abnormal		
	Self-load over-time alarm		
	Inverter bypass out of sync		
Input dry contact status	Input dry contact alarm	None	Buzzer slowly beeps, and the yellow ambient light bar steady on.
	Battery abnormal		Buzzer fast beeps, the BATT. LOW indicator on the
	Battery grounding abnormal		

TABLE 2-12 Abnormal status and alarm/protection function *(continued)*

Fault	Information	Protect requirement	Alarm requirement
	Battery switch opened		operation panel turns red, the battery icon on the touch
	Bypass switch opened		screen turns red, and the Buzzer slowly beeps, the BYP. indicator on the operation panel turns red, the bypass icon on the touch screen turns red, and the yellow ambient light bar steady on.
	Output switch opened		Buzzer slowly beeps, and the yellow ambient light bar steady on.
	Battery discharge disabled on		Buzzer fast beeps, the BATT. LOW indicator on the operation panel turns red, the battery icon on the touch screen turns red, and the yellow ambient light bar steady on.
	Battery charge disabled on		Buzzer fast beeps, the BATT. LOW indicator on the operation panel turns red, the battery icon on the touch screen turns red, and the yellow ambient light bar steady on.
	Generator mode		Buzzer slowly beeps, and the yellow ambient light bar steady on.
	SPD abnormal		Buzzer slowly beeps, and the yellow ambient light bar steady on.
Offline alarm status	Power unit 1 offline	None	Buzzer slowly beeps.
	Power unit 2 offline		

CAUTION

After a battery under-voltage shutdown, the UPS restarts and recharges the battery as soon as the mains is normal.

03

CHAPTER 3

Installation

This chapter describes the installation of the UPS: unpacking and inspection, installation procedure, preparation, mechanical installation, wiring, and system check and test.

IN THIS CHAPTER

3.1 Installation Procedure
3.2 Installation Preparation
3.3 Transportation and Unpacking
3.4 Mechanical Installation
3.5 Wiring
3.6 System Check and Test

ROADMAP **From delivery to operation**

1. **Read the safety instructions** — Section 1.1
2. **Unpack and check the delivery** — Section 3.3
3. **Choose the place and prepare the cables and breakers** — Section 3.2
4. **Install and connect** — Section 3.5
5. **Start** — Section 5.3.2
6. **Check the display and the settings** — Section 4.1
7. **Look after** — Section 5.3.5

CAUTION

Installation and maintenance must be carried out only by qualified electricians trained on this UPS.

Install the UPS only on concrete or another non-combustible floor.

3.1 Installation Procedure

The installation procedure is shown in Figure 3-1.

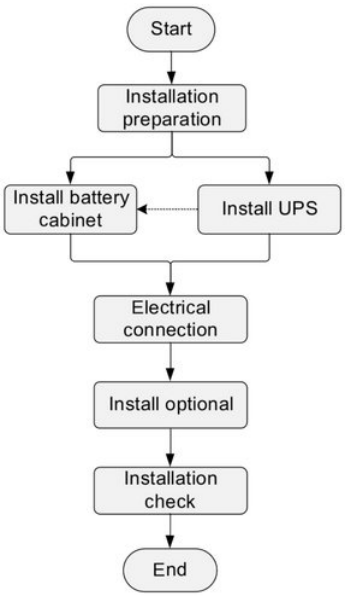

FIGURE 3-1 Installation procedure

3.2 Installation Preparation

3.2.1 Installation Tools

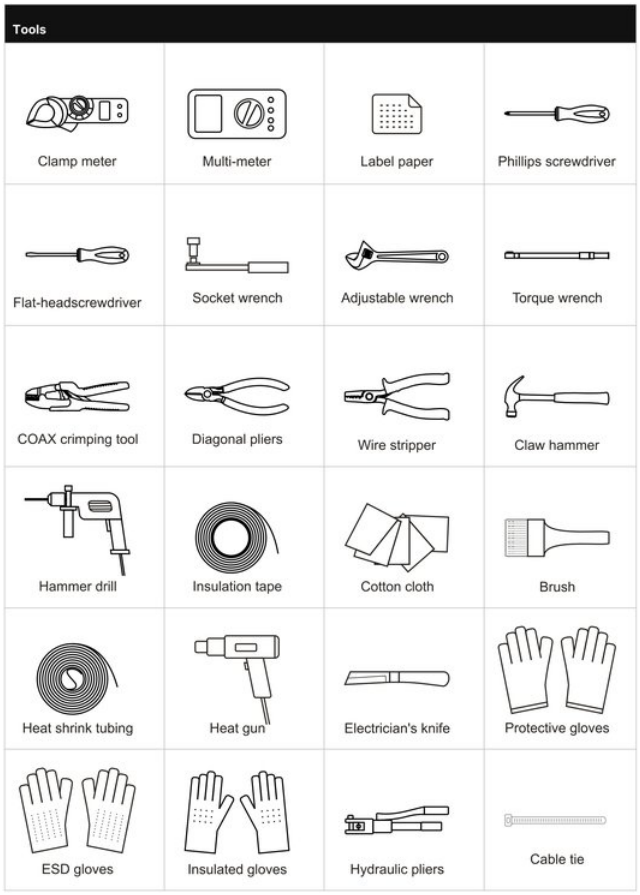

⚠ CAUTION

Use insulated tools to avoid electric shock.

3.2.2 Installation Environment

- Do not install the UPS where the conditions exceed the specification (temperature: -5 °C to 40 °C, relative humidity: 0% to 95%).
- Never install the UPS in an environment with conductive metal dust.
- Do not install the UPS outdoors; the installation environment must meet the specified requirements.
- Basic requirements for power supply:
  - Earthing: make sure that the earthing terminal is in order and that the voltage between neutral and earth does not exceed 5 V.
  - Before installation, make sure that the AC input voltage and the capacity of the mains input cables meet the UPS requirements, taking into account any loss of current-carrying capacity due to cable ageing.
  - The mains input voltage range of the UPS is 80-280 Vac. The mains supply capacity must be greater than the maximum input power of the UPS.
  - Do not use an upstream breaker with residual-current (RCD) protection.
- The installation room must be well ventilated and away from water, heat sources and flammable or explosive materials. Avoid places with direct sunlight, dust, volatile gases, corrosive substances or high salt content.

- The UPS is rated for altitudes up to 2000 m. Above 2000 m, derate the output power according to IEC 62040-3 and IEC 62477-1.

CAUTION

The optimum battery operating temperature is 20-30 °C. Below 20 °C the backup time is reduced; above 30 °C the battery life is shortened.

For safety, the external DC circuit must have a three-pole disconnector.

3.2.3 Installation Space

For good ventilation, keep a clearance of at least 800 mm between the front, side or rear panel of the UPS and walls or adjacent equipment, and at least 800 mm between the top of the UPS and the ceiling, as shown in Figure 3-2.

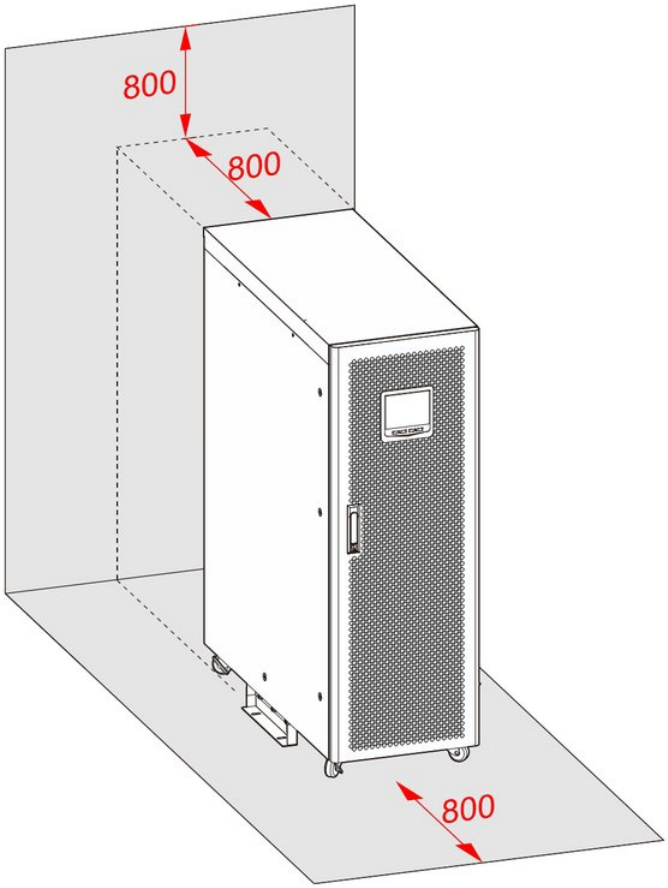

FIGURE 3-2 Installation space (unit: mm)

NOTE

The space requirements are the same for all models; the figure above shows the 60K.

- Do not block the ventilation openings on the front and rear panels; otherwise the internal temperature rises and the service life of the UPS is reduced.

NOTE

The airflow is the same for all models; the figure above shows the 60K.

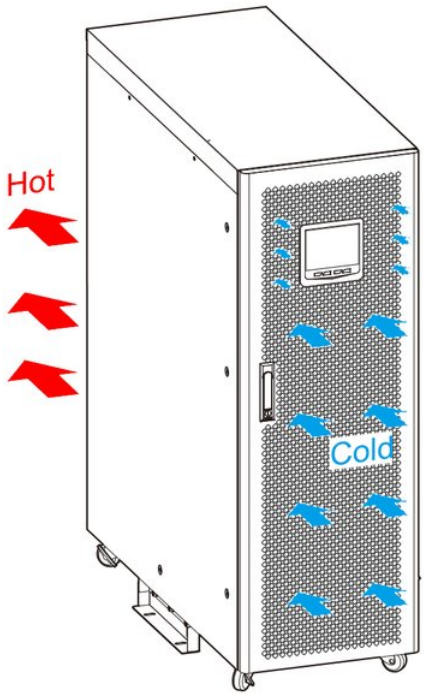

FIGURE 3-3 Heat-dissipating

3.2.4 Selection for Input and Output Wires

For the cross-sections of the AC input and output cables, see the recommended values in Table 3-1.

TABLE 3-1 Recommended wire and terminal specification

Item ⌄		Model ›	60K	80K	100K	120K	160K	200K
Mains input	Mains input current (A)		101	132	164	196	266	329
	Recommended wire sectional area (mm²)	U/V/W/N	35×1	50×1	70×1	70×1	120×1	70×2
	Terminal		DT-35	DT-50	DT-70	DT-70	DT-120	DT-70
Bypass	Bypass input current (A)		90.9	121	152	182	242	303
input	Recommended wire sectional area (mm²)	U/V/W/N	35×1	50×1	70×1	70×1	120×1	70×2
	Terminal		DT-35	DT-50	DT-70	DT-70	DT-120	DT-70
Output	Output current(A)		90.9	121	152	182	242	303
	Recommended wire sectional area (mm²)	U/V/W/N (with non-linear loads, increase the cross-section of the N conductor)	35×1	50×1	70×1	70×1	120×1	70×2
	Terminal		DT-35	DT-50	DT-70	DT-70	DT-120	DT-70
Battery input	Battery nominal discharge current(A)		163	217	241	289	386	482
	Battery max. discharge current (A)		186	248	279	372	496	558
	Recommended wire sectional area (mm²)	+/N/-	35×2	50×2	70×2	70×2	95×2	120×2
	Terminal		DT-35	DT-50	DT-70	DT-70	DT-95	DT-120
Grounding wire	Recommended sectional PE area (mm²)		16×1	25×1	35×1	35×1	70×1	70×1
	Terminal		DT-16	DT-25	DT-35	DT-35	DT-70	DT-70

NOTE

The wires supplied with the UPS are UL-certified. The cross-sections above are recommended for cable lengths of up to 5 m. For longer cables, consult AEC for the cross-section.

3.3 Transportation and Unpacking

3.3.1 Transportation

CAUTION

The UPS must be transported by trained personnel.

Handle with care during transport; avoid impacts and falls.

If the UPS is to be stored for a long time after unpacking, cover it with the original plastic bag.

The UPS can be moved with a powered forklift (Figure 3-4) or a manual pallet truck (Figure 3-5). When lifting, keep the centre of gravity of the UPS centred on the forks and move slowly and steadily.



FIGURE 3-4 Motor-driven forklift

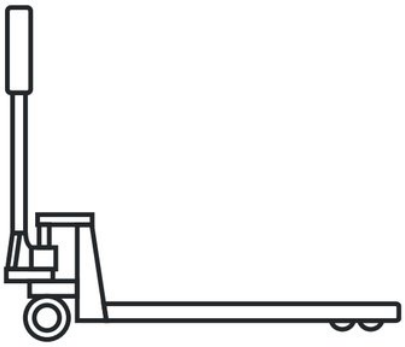

FIGURE 3-5 Manual forklift

CAUTION

When lifting, keep the UPS balanced and stable.

When moving the UPS, keep it upright and do not lower or lift it suddenly.

3.3.2 Unpacking

PROCEDURE

1. Check the packaging for transport damage. If it is damaged, inform the carrier immediately.
2. Move the UPS to the installation site.

CAUTION

To avoid tipping, use forks longer than the pallet.

3. Remove the outer packaging, the foam pads and the plastic bag, and take out the accessories.
4. Check the UPS.
   - Inspect the UPS for transport damage. If there is any damage, inform the carrier immediately.
   - Check against the packing list that all accessories are present and correct. If anything is missing or wrong, note it and contact AEC or your AEC distributor.
5. Loosen the fixing bolts.

- 60K, 80K, 100K, 120K

With a wrench, loosen the six M8 hexagon bolts between the supporting plate and the UPS, then the four M10 hexagon bolts between the pallet and the supporting plate (Figure 3-6). Lower the UPS until its wheels rest on the pallet, then remove the supporting plate (Figure 3-7).

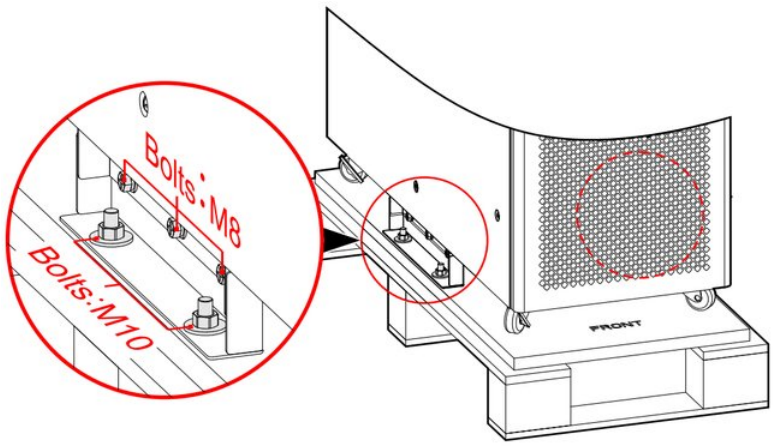

FIGURE 3-6 Dismantle the supporting plate of 60K, 80K, 100K, 120K

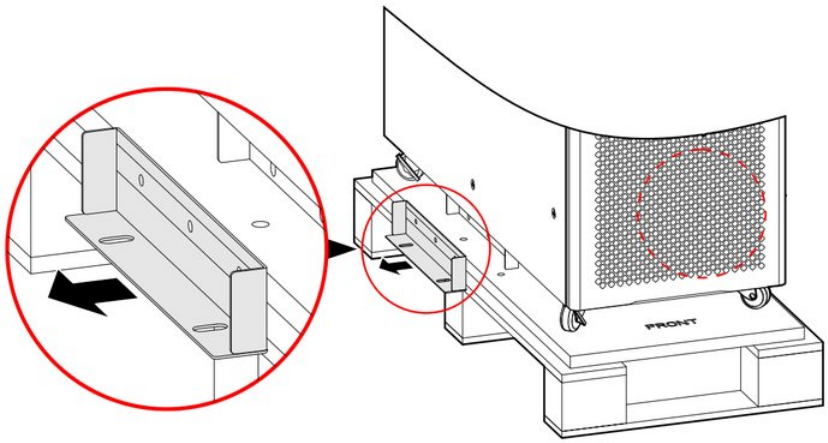

FIGURE 3-7 Dismantle the supporting plate of 60K, 80K, 100K, 120K

- 160K, 200K

Remove the fixing bolts between the pallet and the UPS, as shown in Figure 3-8.

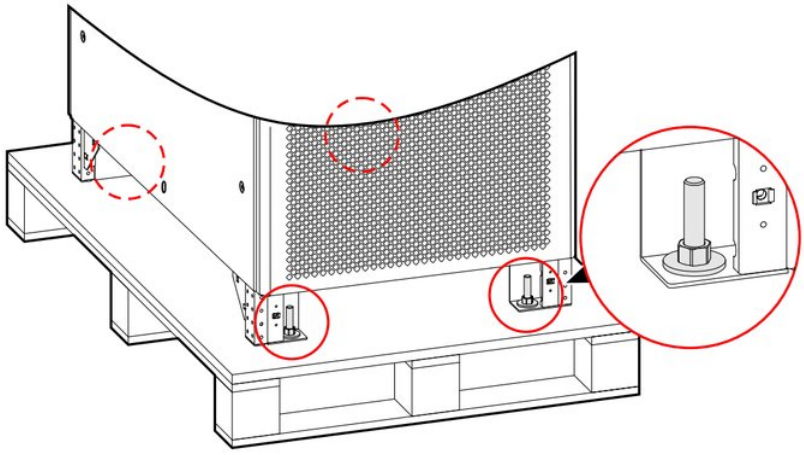

FIGURE 3-8 Bolts position of 160K, 200K

3.4 Mechanical Installation

3.4.1 60K, 80K, 100K, 120K

PROCEDURE

1 Plan the installation position according to the UPS dimensions (Figure 3-9) and the clearance requirements (see 3.2.3 Installation Space).

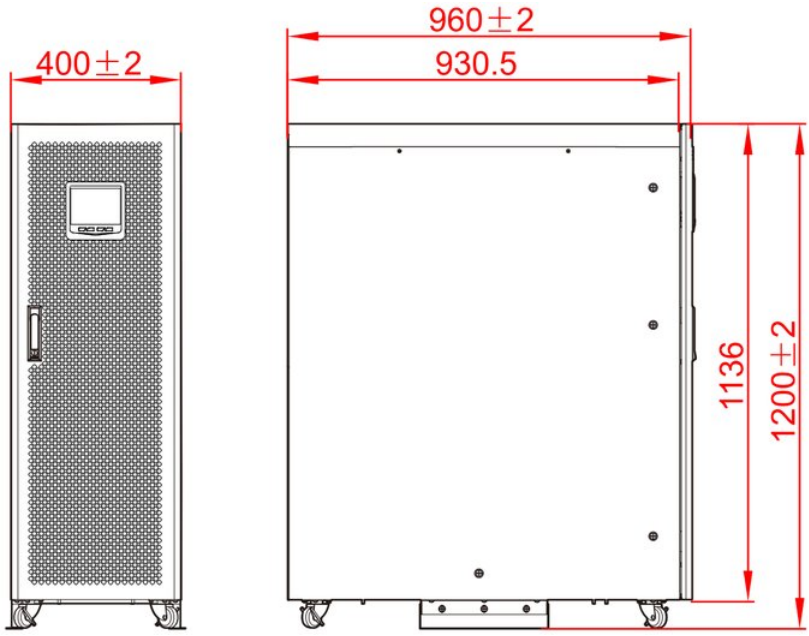

FIGURE 3-9 Size (unit: mm)

2 With a hammer drill, drill four Φ14.5 mm holes according to the base fixing dimensions (Figure 3-10).

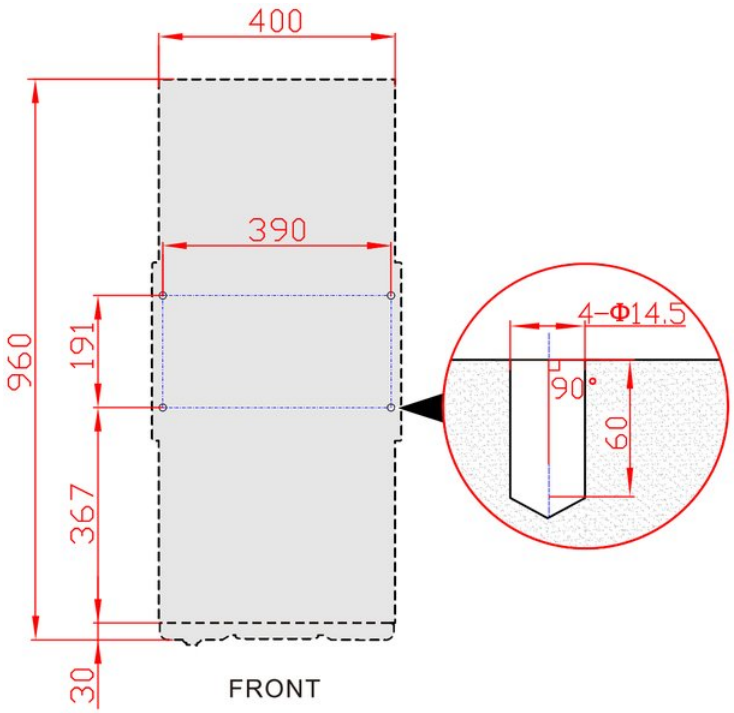

FIGURE 3-10 Bottom installation size (bottom view of pedestal)(unit: mm)

NOTE

- Recommended bolts: M10, drilling depth 60 mm; adjust to the actual installation conditions.
- If the UPS is installed on a steel channel frame, drill four Φ14 mm holes in the channel according to Figure 3-11 and continue with Step 4.

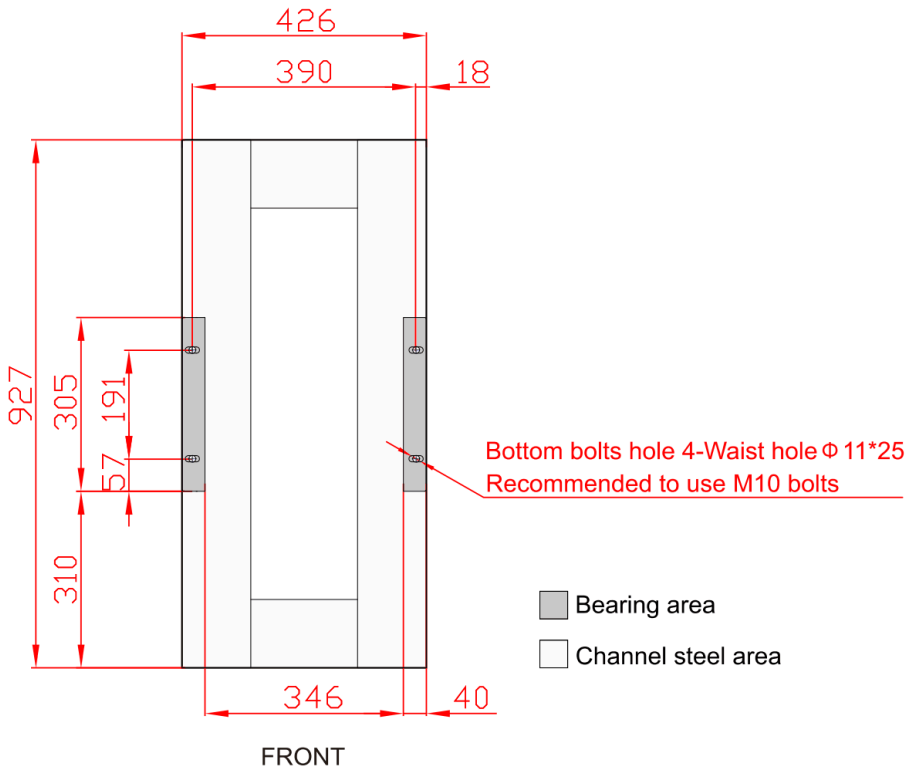

FIGURE 3-11 Recommended installation size for channel steel (unit: mm)

3 Install the expansion bolts, as shown in Figure 3-12.

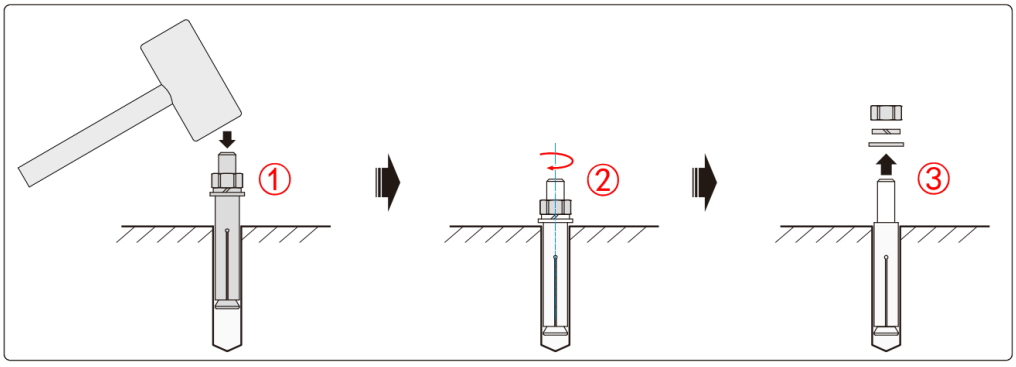

FIGURE 3-12 Install expansion bolts

CAUTION

The expansion sleeve must not protrude above the floor, otherwise it hinders the installation.

NOTE

The expansion bolts must protrude 30 mm to 50 mm.

4 Fix the supporting plate. Place the supporting plate over the expansion bolts, fit the flat washers (Φ10), spring washers (Φ10) and bolts (Φ10) and pre-tighten the bolts, as shown in Figure 3-13.

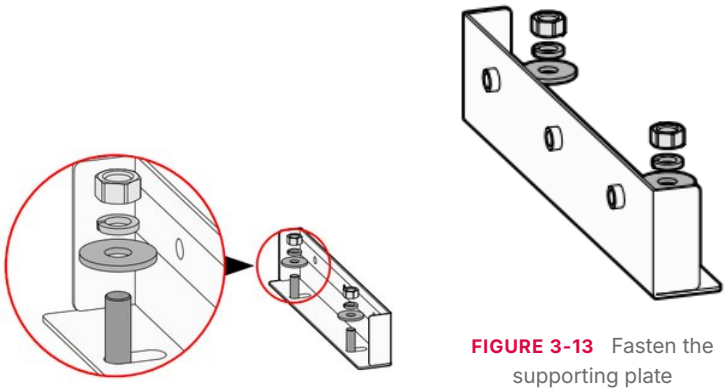

FIGURE 3-13 Fasten the supporting plate

5 Move the UPS from the pallet to the installation site, fix it to the supporting plate with the six M8 hexagon bolts (Figure 3-14), then tighten the bolts of the supporting plate.

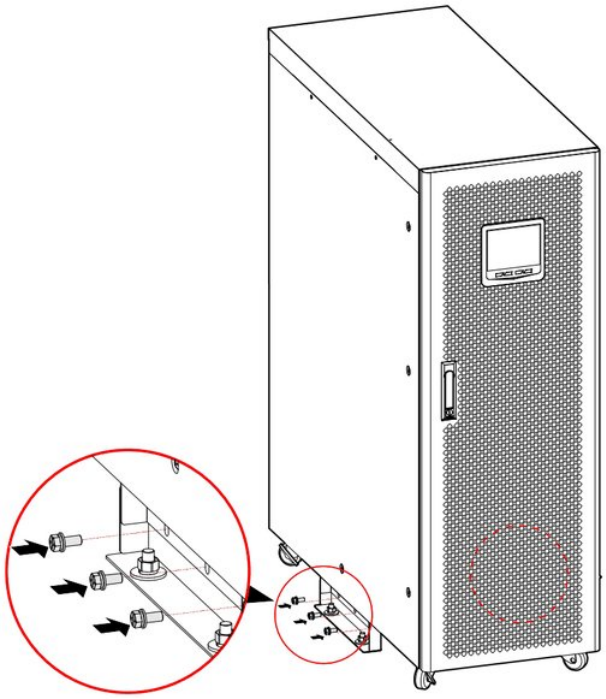

FIGURE 3-14 Fasten the UPS

3.4.2 160K, 200K

> **NOTE**
> This section describes floor installation; for other installation methods, adapt the steps to the actual situation.

> **CAUTION**
> For floor installation, dig a cable trench at the installation site in advance, as shown in Figure 3-15.

> **NOTE**
> The cable trench is similar for all models; recommended dimensions A × W × H = 210 mm × 450 mm × 100 mm (A, W and H as marked in Figure 3-15).

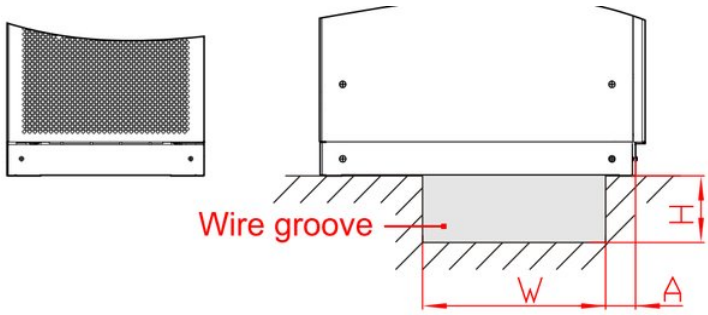

FIGURE 3-15 Wire groove diagram

PROCEDURE

1. Plan the installation position according to the UPS dimensions (Figure 3-16) and the clearance requirements (see 3.2.3 Installation Space).

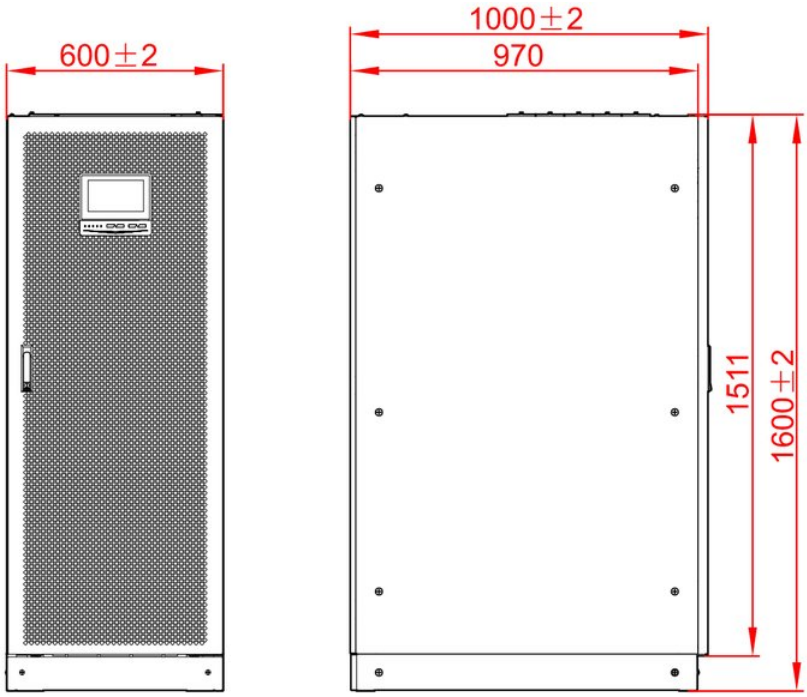

FIGURE 3-16 Size of 160K, 200K (unit: mm)

2. With a hammer drill, drill four Φ16.5 mm holes according to the base fixing dimensions (Figure 3-17).

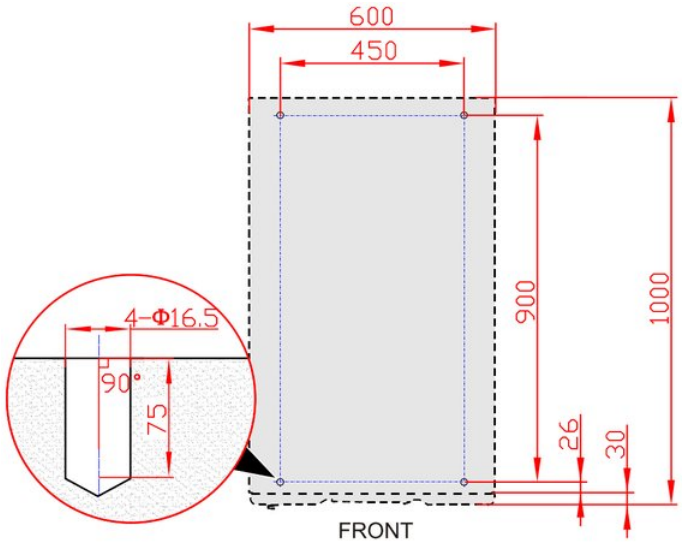

FIGURE 3-17 Bottom installation size (bottom view of pedestal)

NOTE

- Recommended bolts: M12, drilling depth 75 mm; adjust to the actual installation conditions.
- If the UPS is installed on a steel channel frame, drill four Φ14 mm holes in the channel according to Figure 3-18 and continue with Step 4.

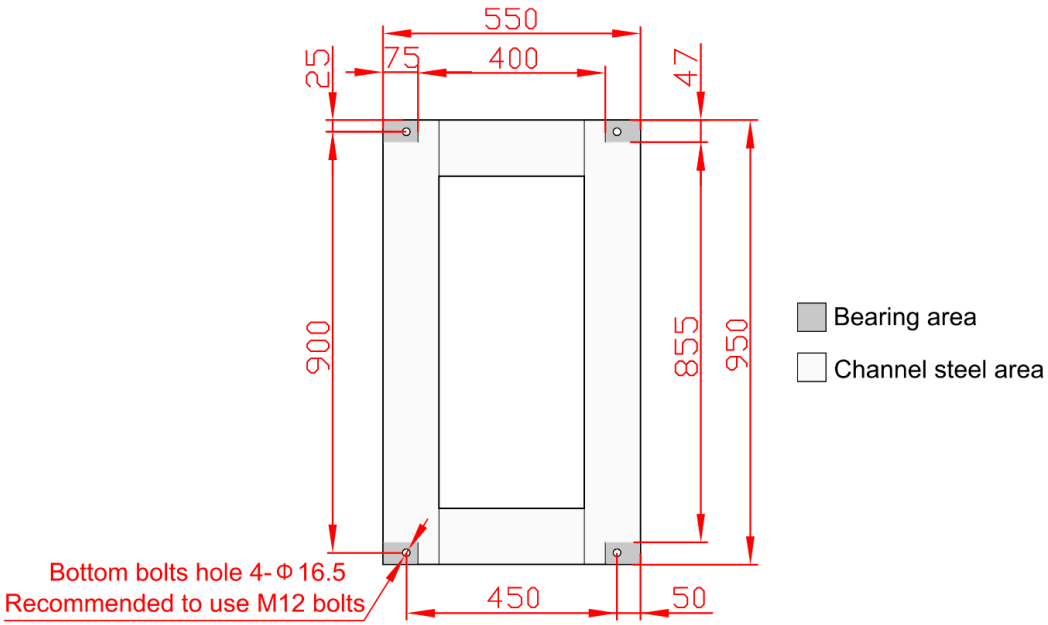

FIGURE 3-18 Recommended installation size for channel steel (unit: mm)

3 Install the expansion bolts, as shown in Figure 3-19.

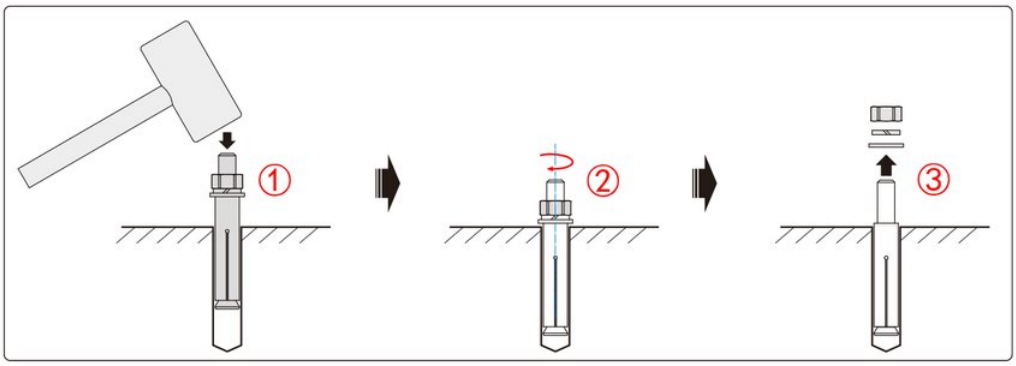

FIGURE 3-19 Install expansion bolts

CAUTION

The expansion sleeve must not protrude above the floor, otherwise it hinders the installation.

NOTE

The expansion bolts must not protrude more than 50 mm.

4 With a forklift, move the UPS from the pallet onto the floor, align the fixing holes in the base with the expansion bolts and tighten the bolts.

5 Reinstall the bottom cover plates, as shown in Figure 3-20.

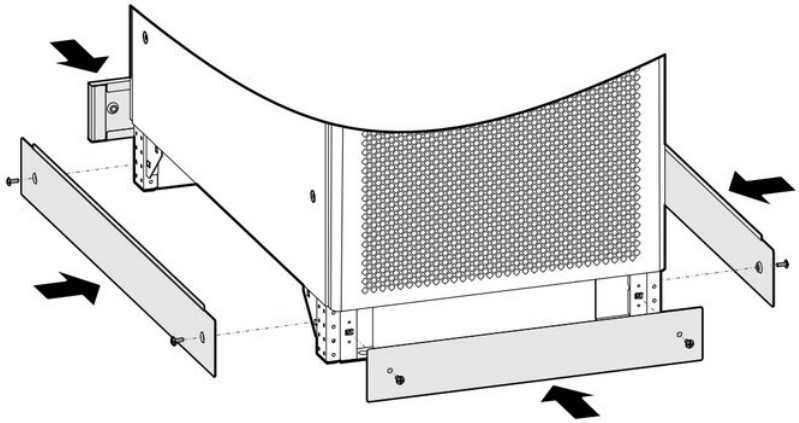

FIGURE 3-20 Install the bottom cover plates

3.4.3 Optional Accessory Installation

If the SNMP card or an expansion card is supplied separately, install it as follows.

SNMP CARD

PROCEDURE

1. Dismantle the SNMP card cover plate on the bypass unit, as shown in Figure 3-21.

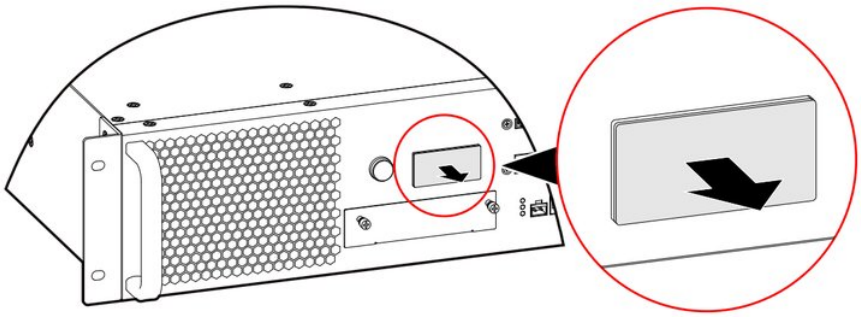

FIGURE 3-21 Dismantle the SNMP card cover plate

2. Install the SNMP card on the bypass unit with 2 screws, as shown in Figure 3-22.

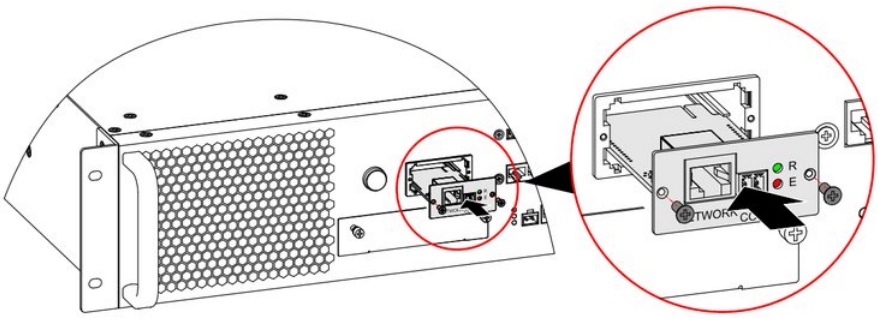

FIGURE 3-22 Install SNMP card

BMS EXPANSION CARD/DRY CONTACT EXPANSION CARD

> **NOTE**
> The dry-contact expansion card and the BMS expansion card are installed in the same way; the BMS card is shown as an example.

PROCEDURE

1. Loosen the screws of the expansion card cover plate on the bypass unit and remove the cover plate, as shown in Figure 3-23.

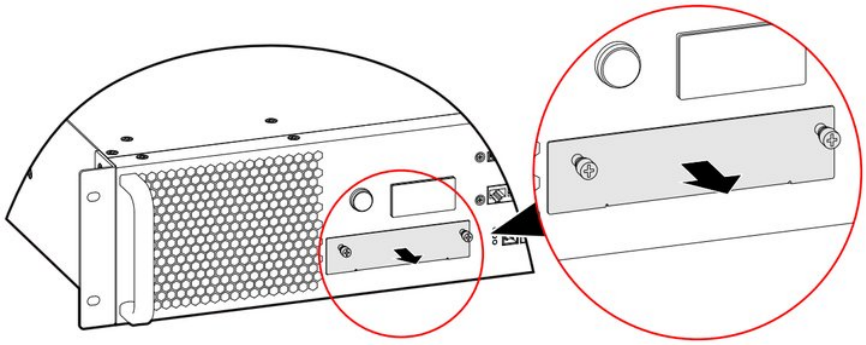

FIGURE 3-23 Dismantle the expansion card cover plate

2 Install the expansion card on the bypass unit, as shown in Figure 3-24.

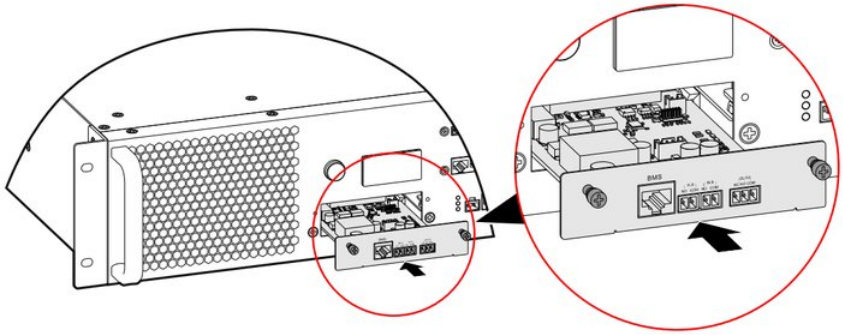

FIGURE 3-24 Install the expansion card

3.4.4 Battery Release Control Accessory Installation

DANGER

Make sure the UPS is completely shut down before installing the battery release control accessory.

If the battery release function is needed after delivery, the battery release accessory is installed on site.

NOTE

Contact AEC service for the routing and installation details.

PROCEDURE

1 Install the battery release PCB at the rear of the UPS with five M4 screws; see Figure 3-25 and Figure 3-26 for the position.

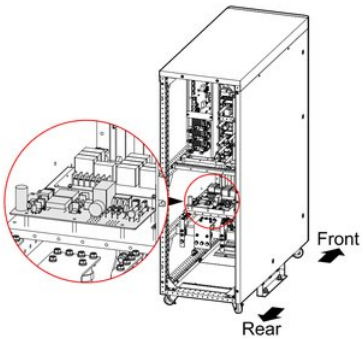

FIGURE 3-25 Installation position of PCB for 60K, 80K, 100K, 120K

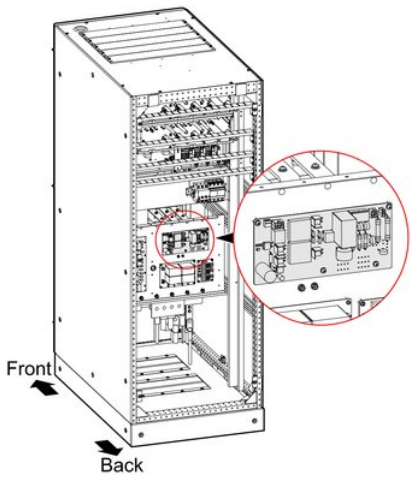

FIGURE 3-26 Installation position of PCB for 160K, 200K

2 Connect CN1 to CN5 on the PCB to the UPS and to the customer's busbar respectively; the terminal connections are shown in Figure 3-27.

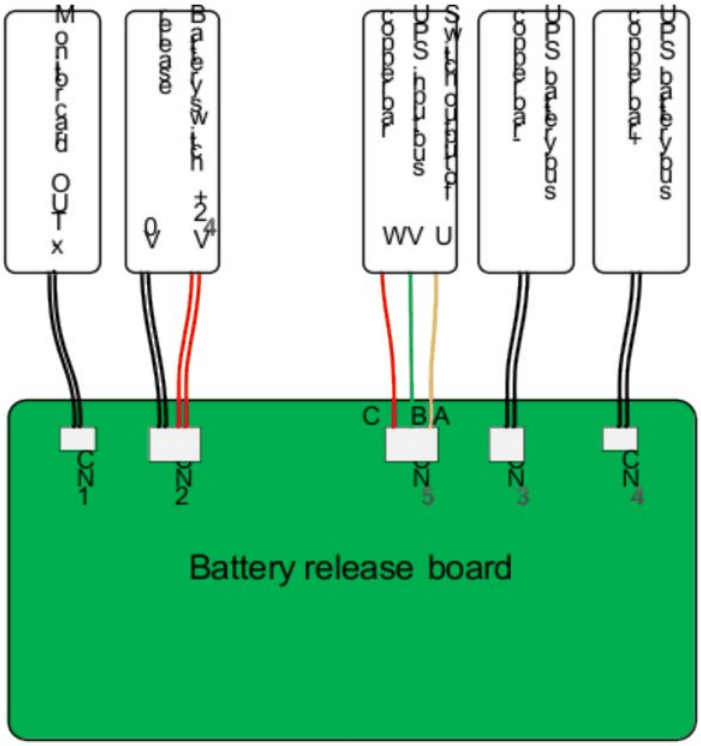

FIGURE 3-27 Illustration for terminal connection of battery release

3.4.5 Install Battery Cabinet

IMPORTANT SAFETY RULE

DANGER

Do not open or disassemble the battery: the electrolyte is harmful to the eyes. In case of contact with the electrolyte, rinse with plenty of water and seek medical help immediately.

To avoid electric shock and short circuits when working on the batteries, observe the following precautions.

- Do not wear watches, rings or other metal jewellery.
- Use tools with insulated handles.
- Do not put any tool or metal object on the battery.
- Keep the battery away from fire; no smoking.

BATTERY CABINET INSTALLATION PROCEDURE

CAUTION

The external battery must be installed by qualified technicians.

In addition to the UPS, batteries and a battery cabinet are required. Install the battery cabinet as follows.

PROCEDURE

1 Connect the wires of external batteries properly.

CAUTION

Before connecting, make sure the battery cabinet switch is OPEN (OFF).

2 With the battery switch open, connect the cables from the battery switch to the +, - and N terminals of the UPS. Check polarity and voltage, then close the switch between the UPS and the batteries.

After installation and testing, the UPS can be put into service.

3.5 Wiring

For backfeed protection, it is recommended to install a contactor with a 220 V AC coil on the AC side.

3.5.1 60K, 80K, 100K, 120K

PROCEDURE

1 Open the front door of the UPS and remove the front and rear wiring cover plates, as shown in Figure 3-28.

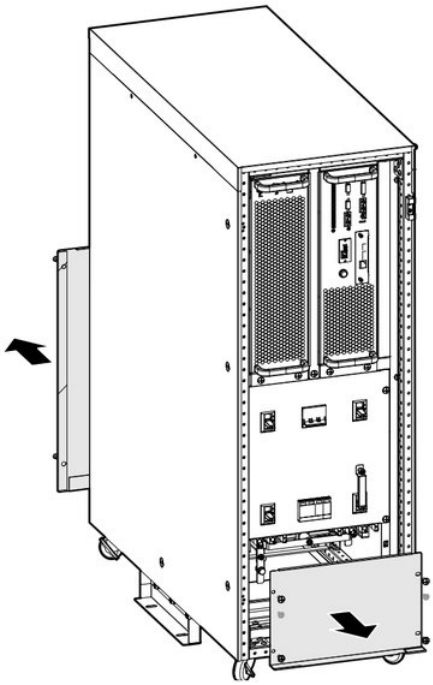

FIGURE 3-28 Remove the cover plate of wiring

2 Route the input, output, battery and PE cables through the bottom cable entry holes (Figure 3-29), connect them to the terminal bars according to Figure 3-30 and tighten the bolts.

⚠ CAUTION

When wiring, make sure all cables are firmly connected to the terminals. Avoid loose connections and reversed cables.

NOTE

With a common mains and bypass supply, the linked mains and bypass terminal bars together form the input; connecting the input cables to the bypass terminals is preferred. On 60K, 80K, 100K and 120K, the input N and the battery N are on the same terminal bar at the rear of the UPS.

⚠ CAUTION

When wiring, make sure the input/output cables are securely connected to the correct input/output terminals.

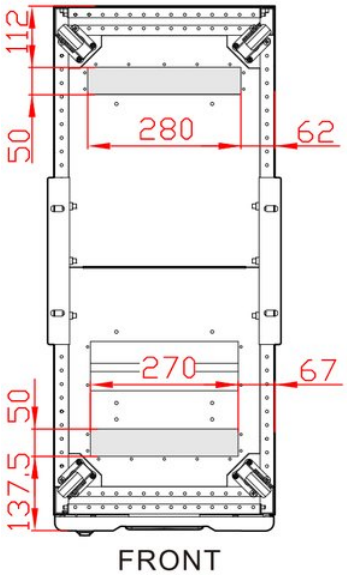

FIGURE 3-29 Down wiring holes diagram of 60K, 80K, 100K, 120K

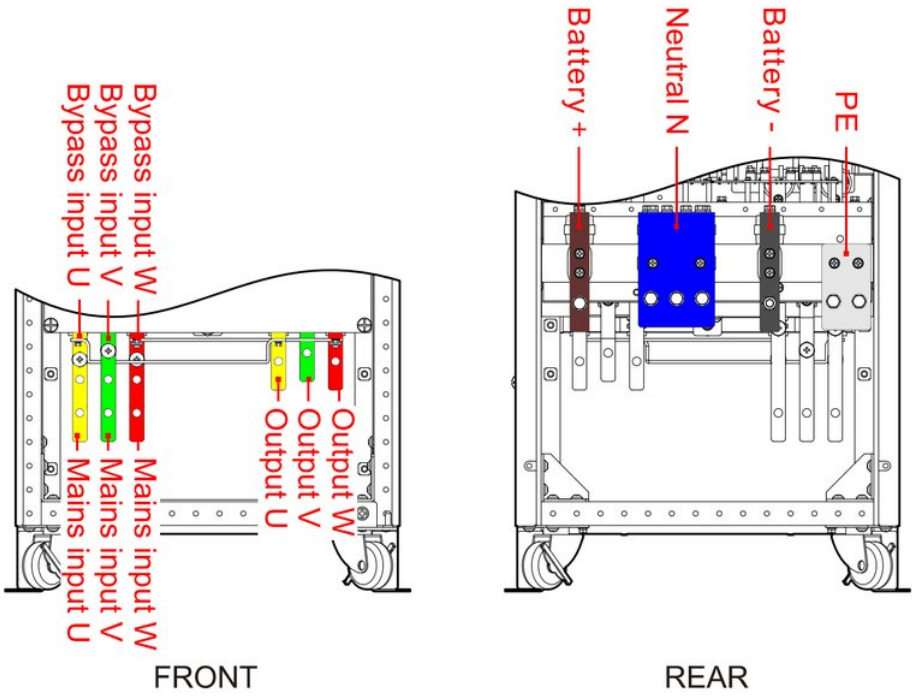

FIGURE 3-30 Wiring terminal diagram of 60K, 80K, 100K, 120K

> **NOTE**
> 60K, 80K, 100K and 120K are delivered for a common mains and bypass supply. For separate supplies, remove the three copper links between the mains and bypass terminals (Figure 3-31), then connect each supply to its own terminals.

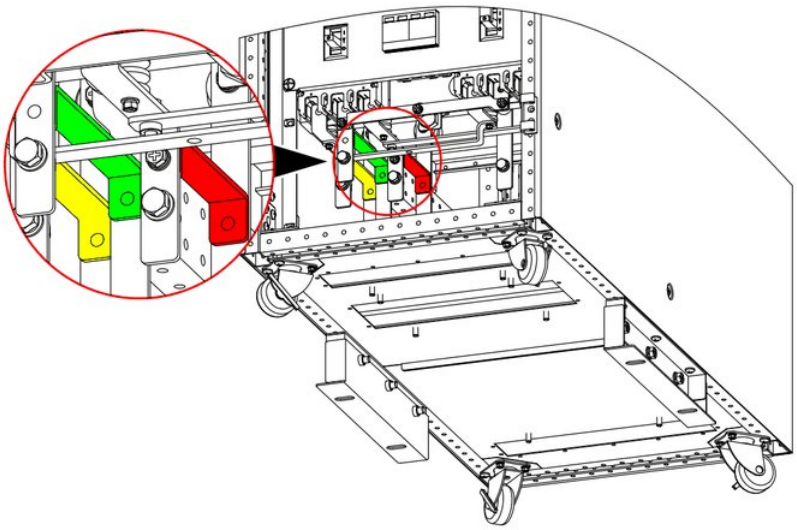

FIGURE 3-31 Short circuit bars position of mains and bypass

A DC switch is recommended for the battery input; the wiring is shown in Figure 3-32.

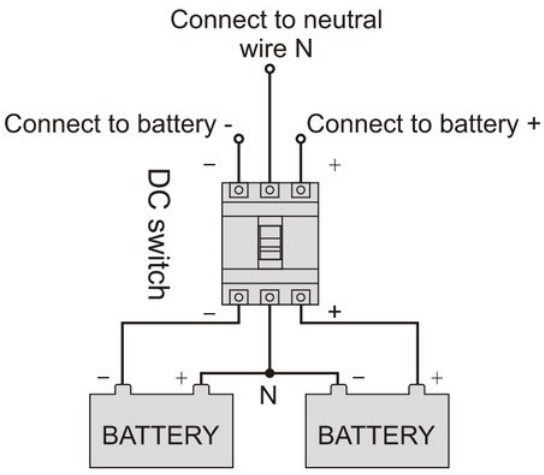

FIGURE 3-32 Battery wiring diagram

3. Route the communication cables through the cable entry hole and connect them securely to the corresponding ports.
4. Refit the bottom cable sealing plate. The wiring is complete.

3.5.2 160K, 200K

PROCEDURE

1. Open the door and remove the front and rear wiring cover plates. The cover plate positions of the 200K are shown in Figure 3-33.

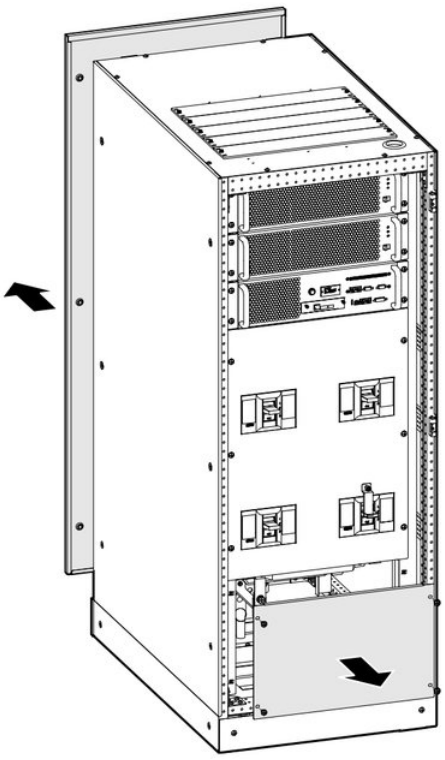

FIGURE 3-33 Remove the back and top wiring cover plate of 160K, 200K

2. Route the input, output, battery and PE cables through the bottom wiring hole (cable entry holes: Figure 3-34), connect them to the terminals (Figure 3-35, Figure 3-36) and tighten the bolts.

CAUTION

When wiring, make sure the input/output cables are securely connected to the correct input/output terminals.

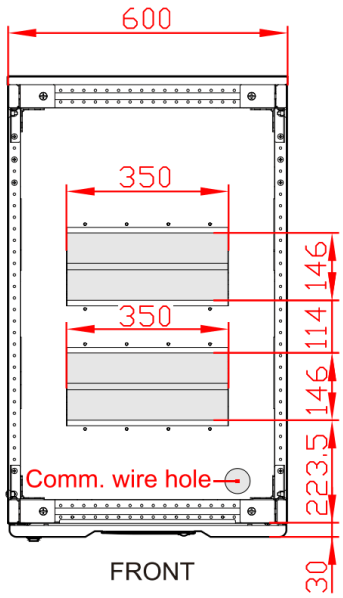

FIGURE 3-34 Wire inlet and outlet hole of down wiring of 160K, 200K

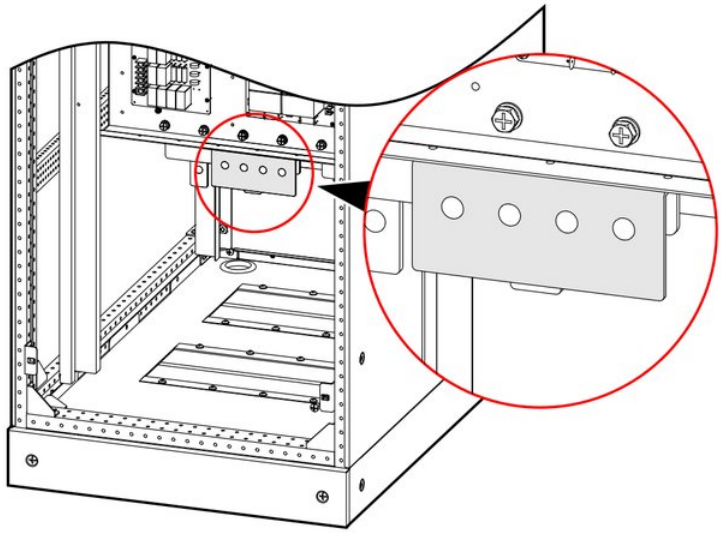

FIGURE 3-35 PE position of 160K, 200K

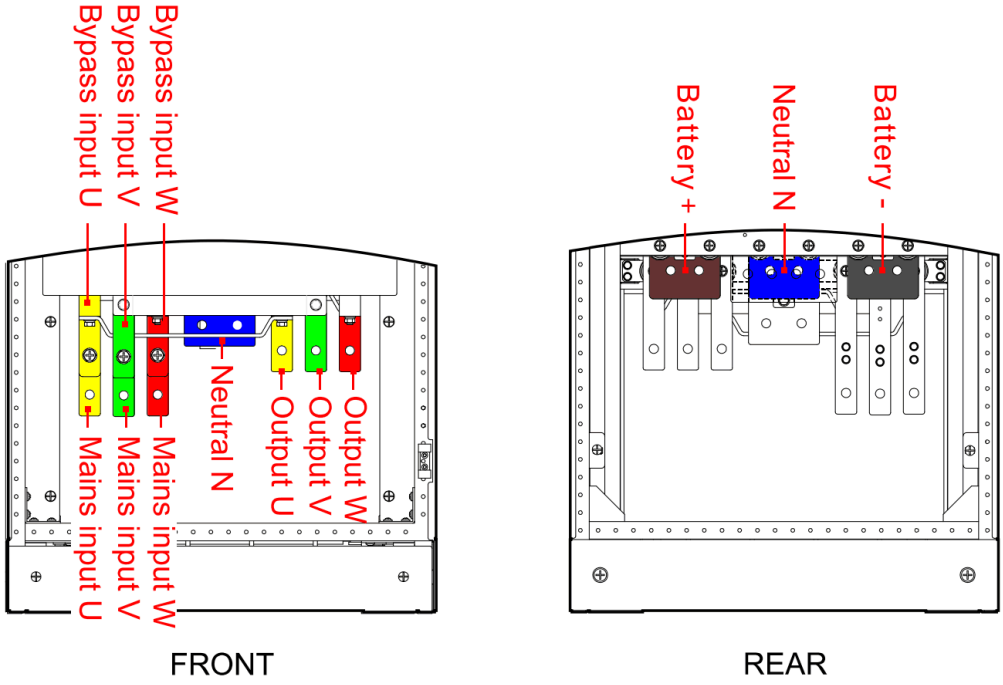

FIGURE 3-36 Wiring terminals bars diagram of 160K, 200K

CAUTION

When wiring, make sure the input/output cables are securely connected to the correct input/output terminals.

NOTE

160K and 200K are delivered for a common mains and bypass supply. For separate supplies, remove the three copper links between the mains and bypass terminals (Figure 3-37), then connect each supply to its own terminals.

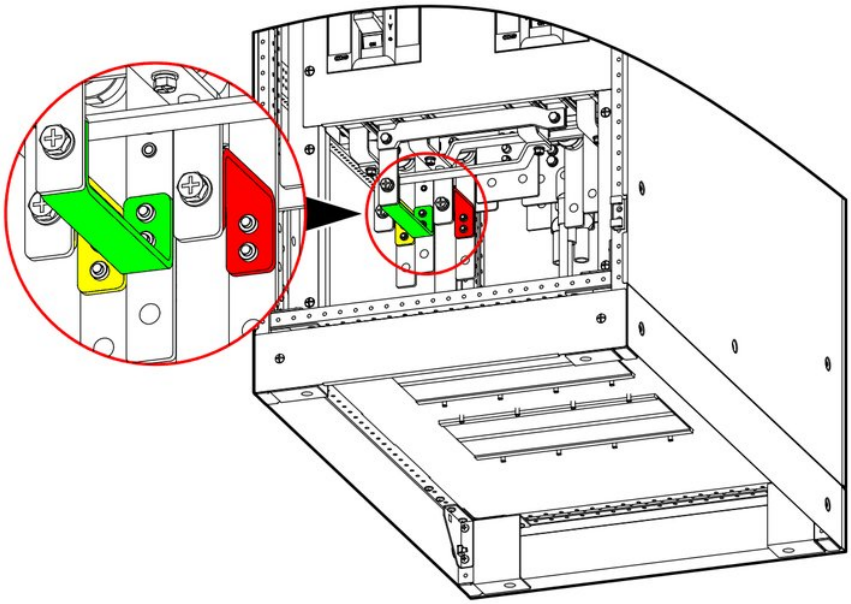

FIGURE 3-37 Short circuit terminal bars position of mains and bypass

A DC switch is recommended for the battery input; the wiring is shown in Figure 3-38.

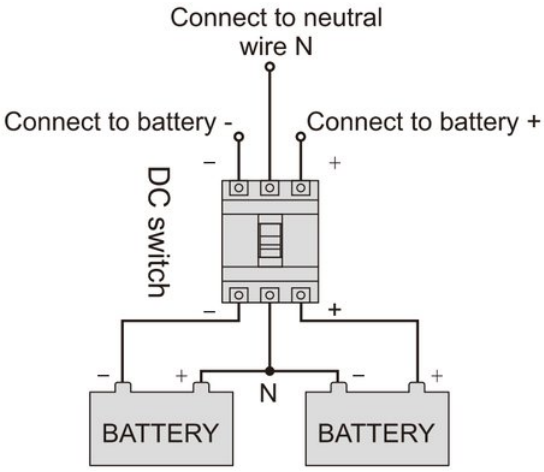

FIGURE 3-38 Battery wiring diagram

3. Route the communication cables through the cable entry hole and connect them securely to the corresponding ports.
4. Refit the bottom cable sealing plate. The wiring is complete.

3.6 System Check and Test

3.6.1 Check Electrical Connection

After completing the electrical connections, check the following items.

TABLE 3-2 Check list

NO.	Check item	Result
1	Check that the colours of the AC cables comply with the regulations.	Yes☐ No☐
2	Check that the cabinet wiring is secure.	Yes☐ No☐
3	Check that the safety labels of the AC distribution board are complete.	Yes☐ No☐
4	Check that all connection points are tight.	Yes☐ No☐
5	Check that the batteries are connected with the correct polarity and sequence.	Yes☐ No☐
6	Check that the cable markings are correct.	Yes☐ No☐
7	Check that the wiring is neat and that the cable connections comply with the regulations.	Yes☐ No☐
8	Check that the installation and wiring allow future modification, expansion and maintenance of the system.	Yes☐ No☐

3.6.2 UPS Test

Switch off the mains input switch to simulate a mains failure. The UPS transfers to battery operation, the touch screen shows the alarm and the buzzer beeps every 1 s.

3.6.3 Connect Load

When the UPS is running stably, switch on the loads: high-power devices first, then low-power ones. Devices with a high inrush current can trigger the overload protection (or bypass operation): start them first.

CHAPTER 4

04 Touch Screen Operation and Setting

This chapter describes the operating parameters, operating status and system settings of the UPS on the touch screen.

IN THIS CHAPTER

4.1 LCD Interface Flowchart
4.2 Main Page
4.3 System Work Status Display
4.4 Buzzer Control Function
4.5 Monitor Page
4.6 Setting Manage
4.7 Information Manage
4.8 ON/OFF

4.1 LCD Interface Flowchart

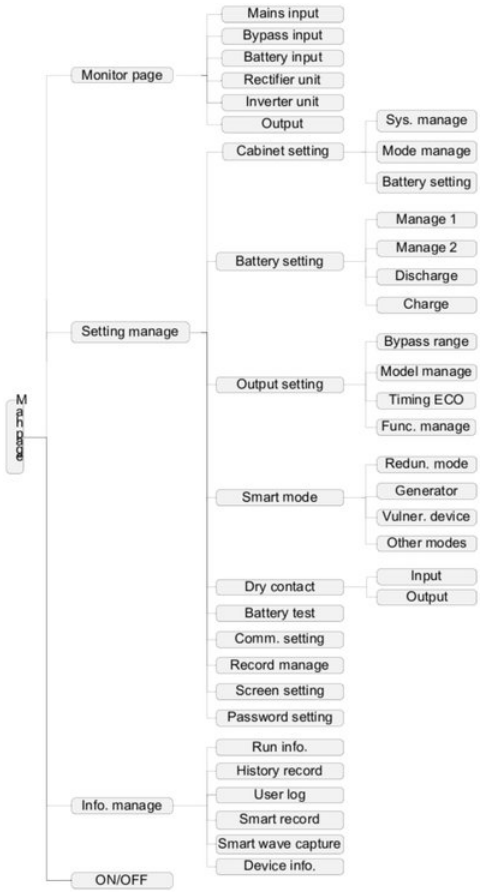

FIGURE 4-1 Menu structure

> **NOTE**
> The values in the figures of this chapter are for illustration only; the actual screens may differ.

Keys, lights and touch screen: quick guide

The inverter is started and stopped with the ON and OFF key pairs (pressed together) or from the ON/OFF page of the touch screen. The light bar shows the state from across the room.

AT A GLANCE **Ambient light bar**

Blue	Blue, flashing	Yellow	Red
UPS working normally	Battery mode	Alarm: the UPS is still operating	Fault: the UPS is not operating

QUICK GUIDE **Start the inverter** Section 5.3.2

1. **Switches** — Bypass, then mains, then external battery switch: the UPS starts on bypass
2. **Indicators** — Wait until the green indicators of all power units flash slowly
3. **ON + ON** (3 s) — Press the ON pair, or tap ON/OFF then Confirm
4. **OUTPUT** — Switch on the output switch, then the loads, largest first

QUICK GUIDE **Shut down** Section 5.3.3

1. **Loads off** — Switch off the load
2. **OFF + OFF** (3 s) — Press the OFF pair, or tap ON/OFF then Confirm: the UPS goes to bypass
3. **Switches** — Battery, mains, bypass, then output switch off

QUICK GUIDE **Cold start from the battery** Section 5.3.2

1. **Battery switch** — Switch on only the external battery switch
2. **Cold start** (> 3 s) — Press the battery cold-start key on the bypass unit

QUICK GUIDE **Mute the buzzer** Section 4.4

1. **Buzzer** — Tap the buzzer icon to mute or unmute

> A new fault after muting turns the buzzer on again.

4.2 Main Page

After power-on, the main page is displayed, as shown in Figure 4-2.

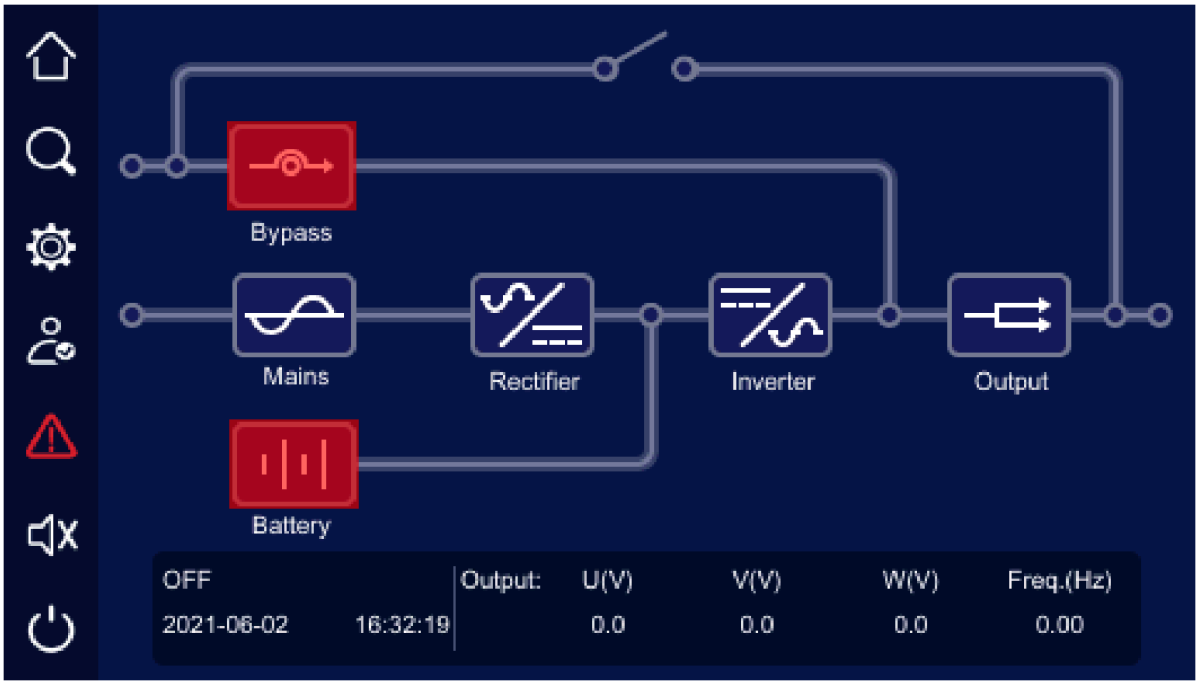

FIGURE 4-2 Main page

The main page gives an overview of the system. The icons on the main page mean:



: System bypass input. When the bypass input is abnormal, the icon flashes and is shown as

.

: System mains input. When the mains input is abnormal, the icon flashes and is shown as .

: Rectifier information. Click the icon to select a unit and view its rectifier information.

: Inverter information. Click the icon to select a unit and view its inverter information.

: Battery status. When the battery is abnormal, the icon flashes and is shown as .

: System output status. When the output is abnormal, the icon flashes and is shown as .

: Back to main page.

: Information record.

: System parameter setting.

: Login.

: Buzzer control.

: Alarm.

: ON/OFF.

The status and energy-flow display on the main page shows the operating status of the system and of the units at a glance.

4.3 System Work Status Display

The system working status includes: abnormal protection, shutdown, bypass output, inverter output, grid-tied self-load running, ECO bypass output, frequency converter output, maintenance bypass output, grid-tied self-aging shutdown. The pages are shown in Figure 4-3 to Figure 4-11.

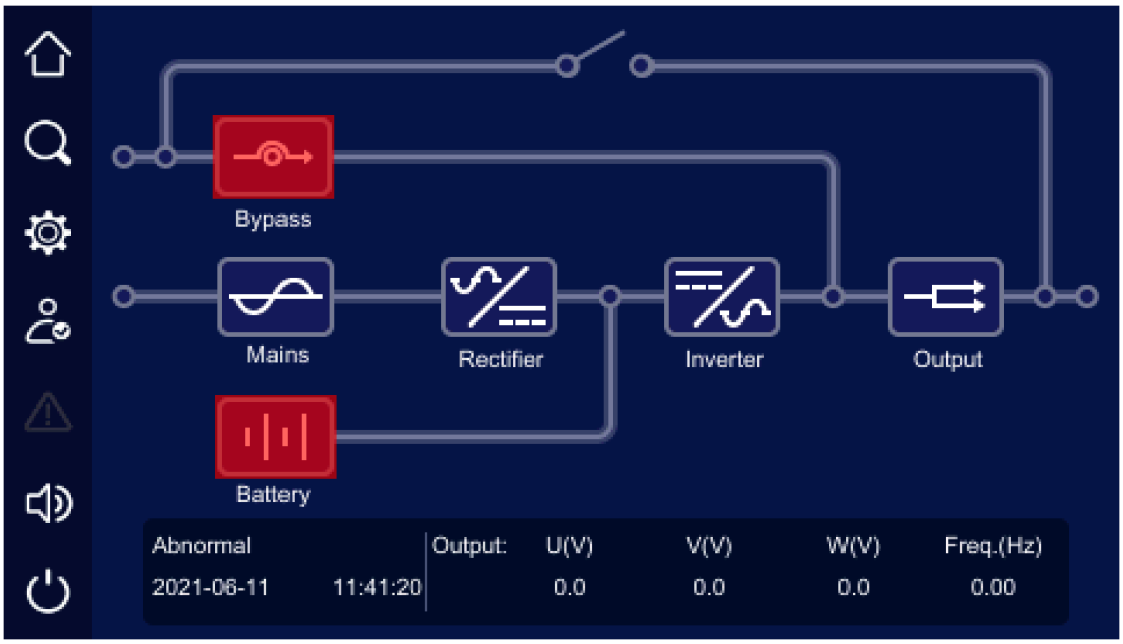

FIGURE 4-3 Abnormal protection, with no output

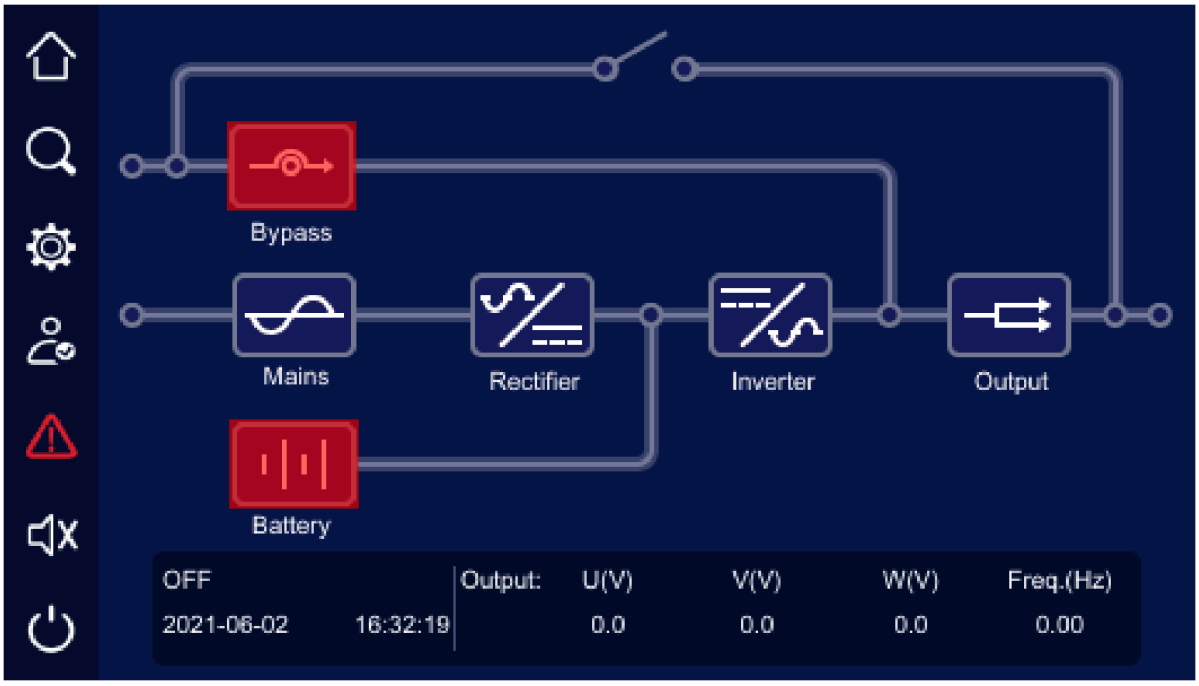

FIGURE 4-4 Shutdown

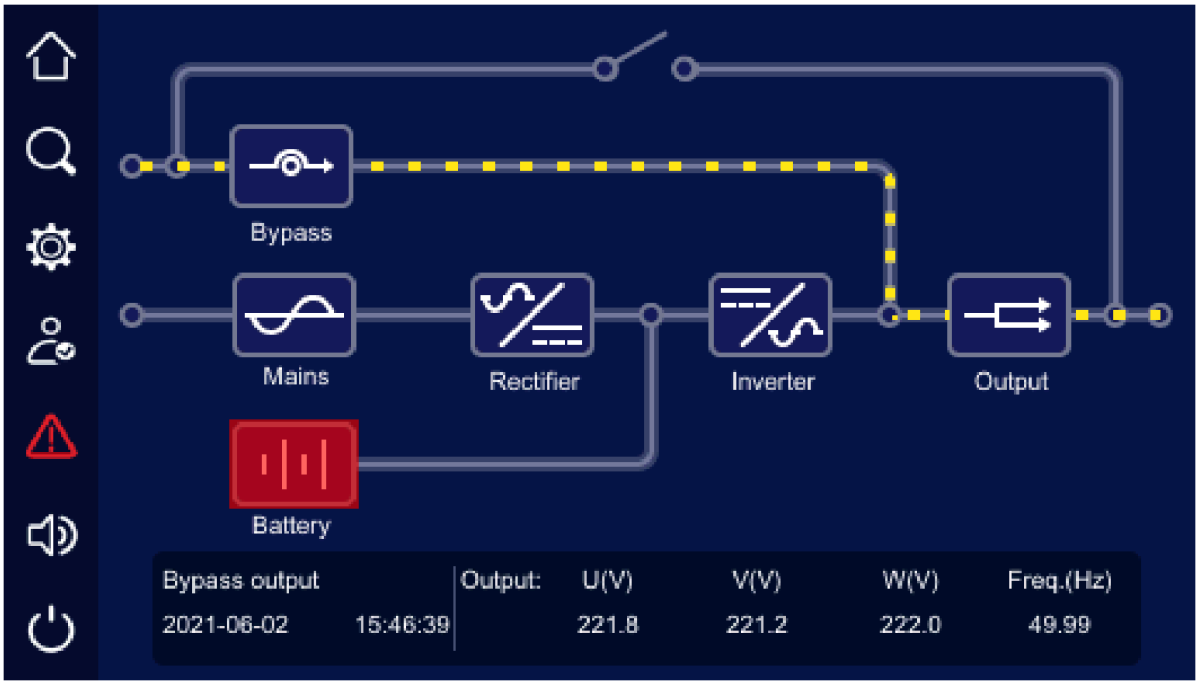

FIGURE 4-5 Bypass output

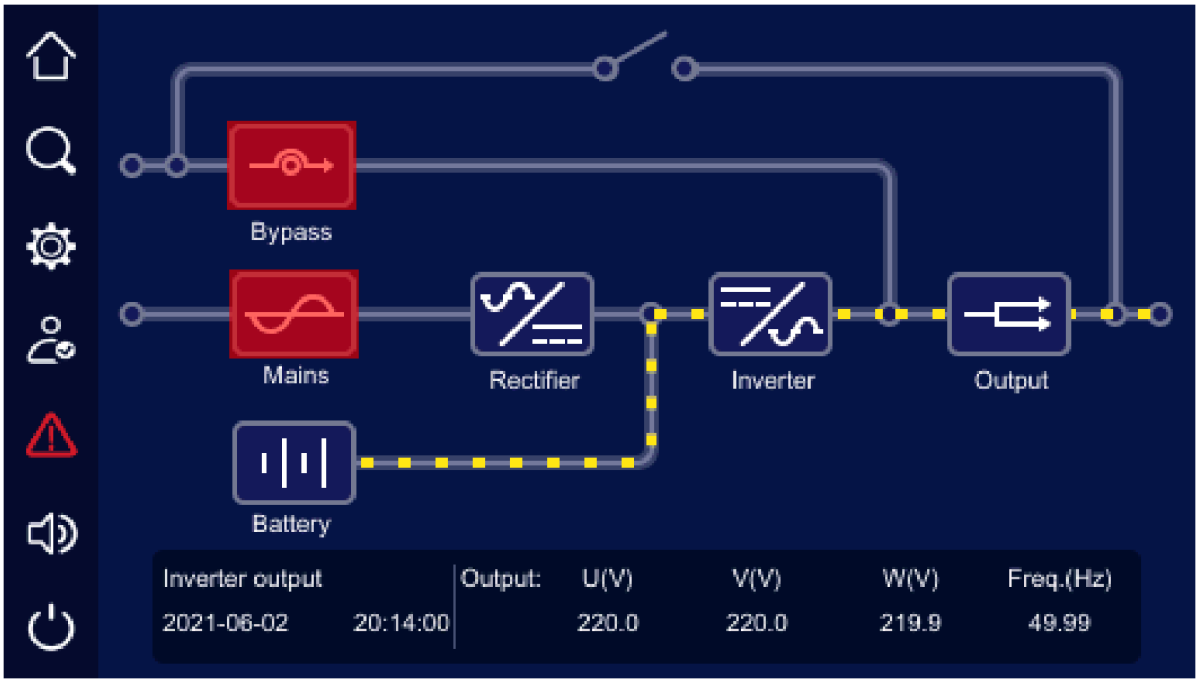

FIGURE 4-6 Battery inverter output

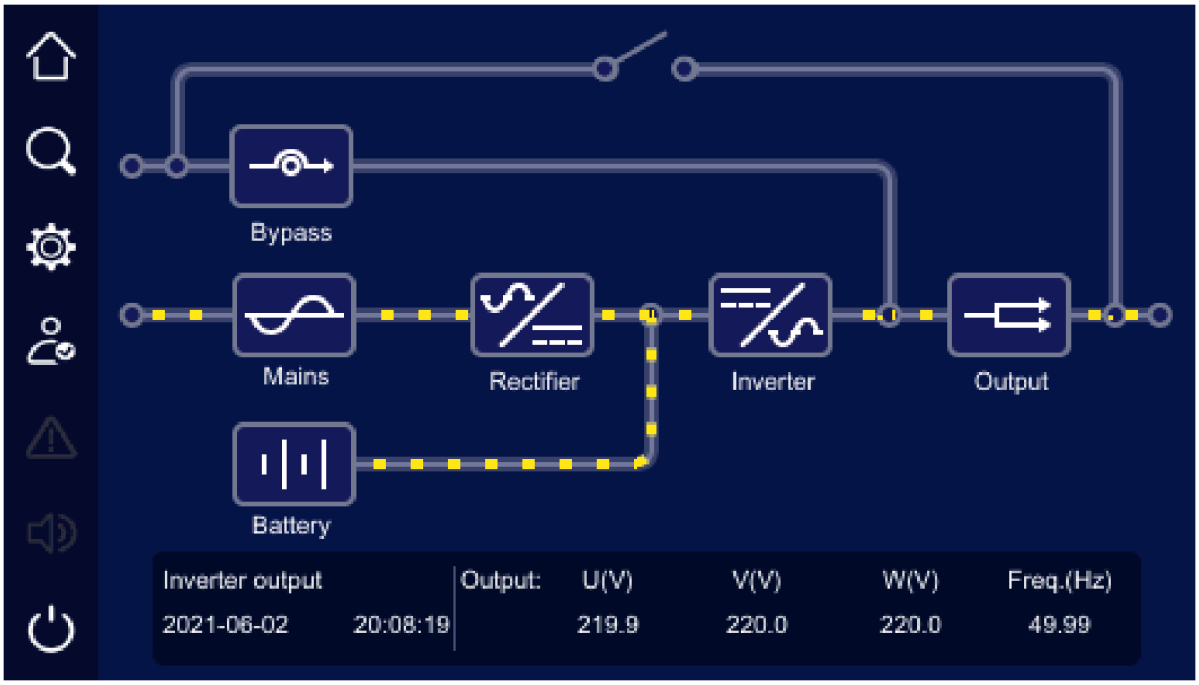

FIGURE 4-7 Mains inverter output

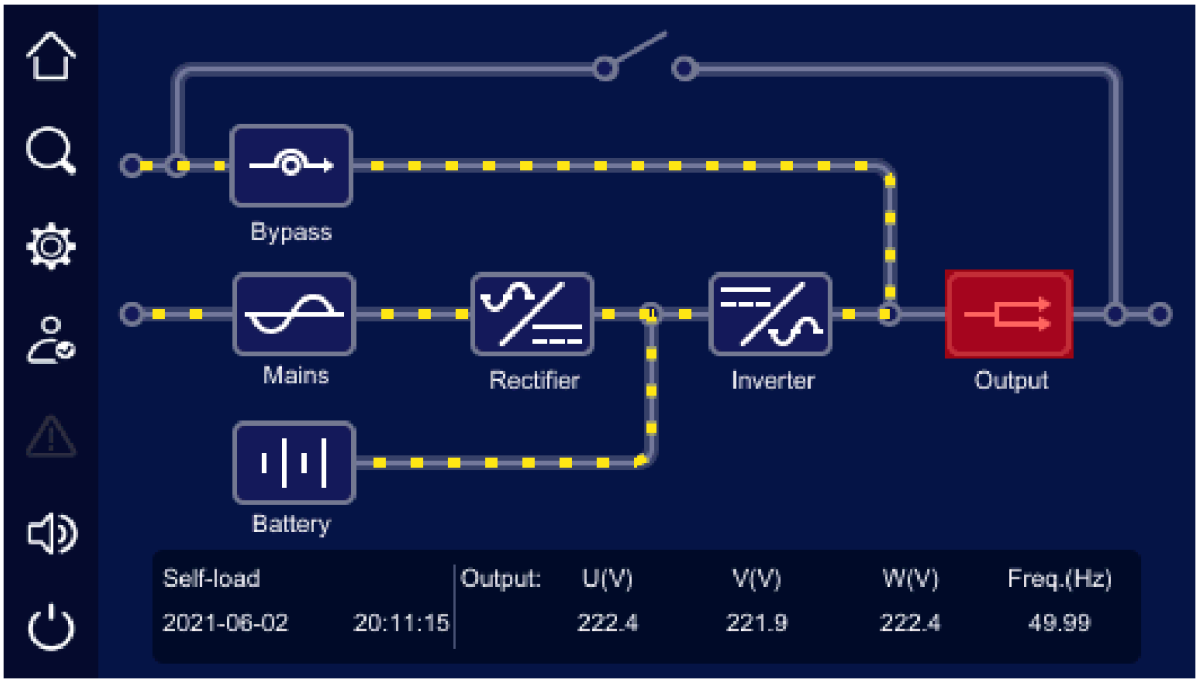

FIGURE 4-8 Grid-tied self-load running

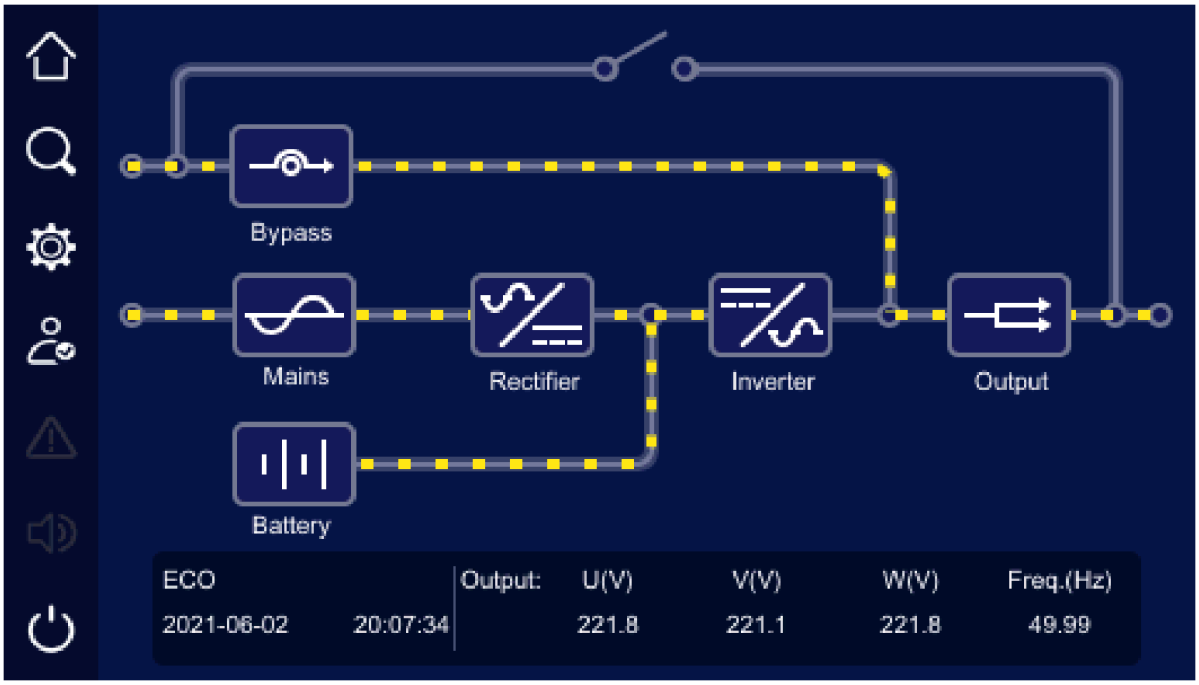

FIGURE 4-9 ECO bypass output

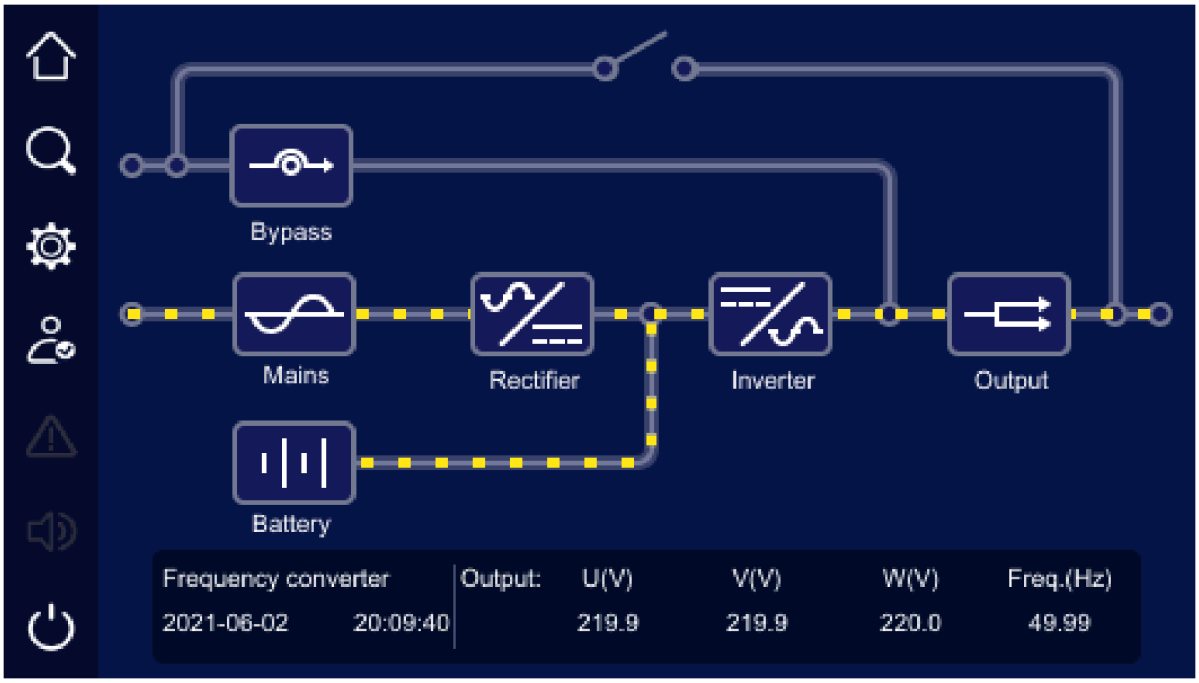

FIGURE 4-10 Frequency converter output

When a unit or the system is abnormal, the main page shows the "Abnormal alarm" indicator; click it to display the current fault information, as shown in Figure 4-12.

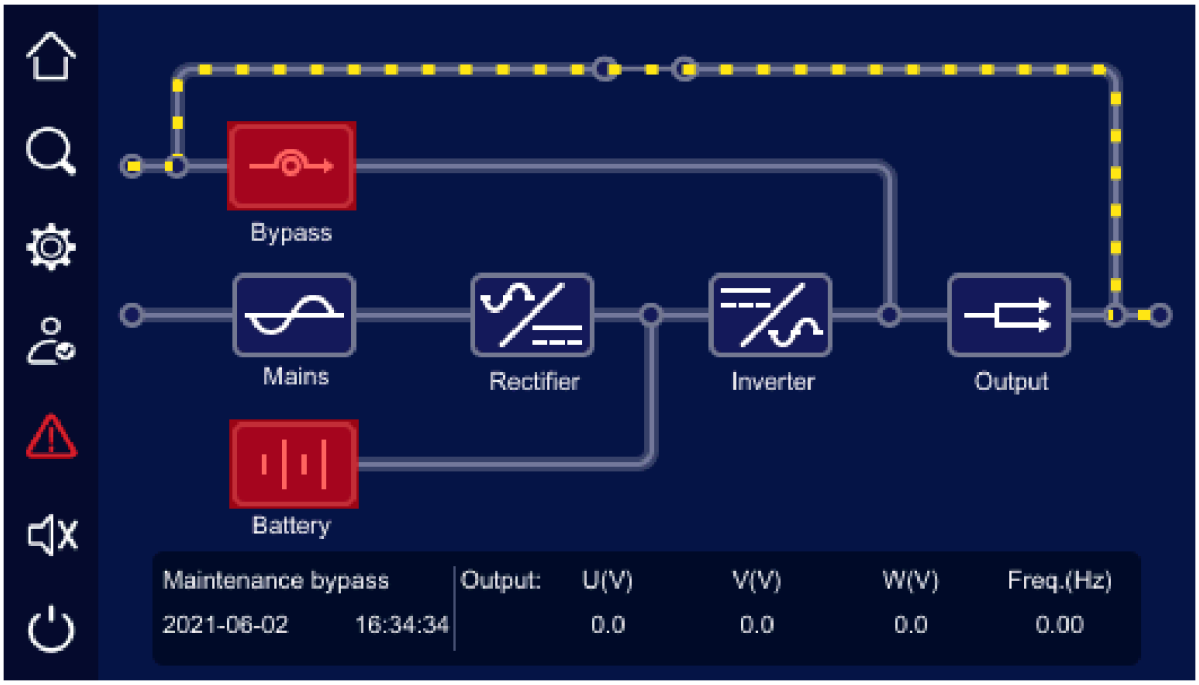

FIGURE 4-11 Maintenance bypass output

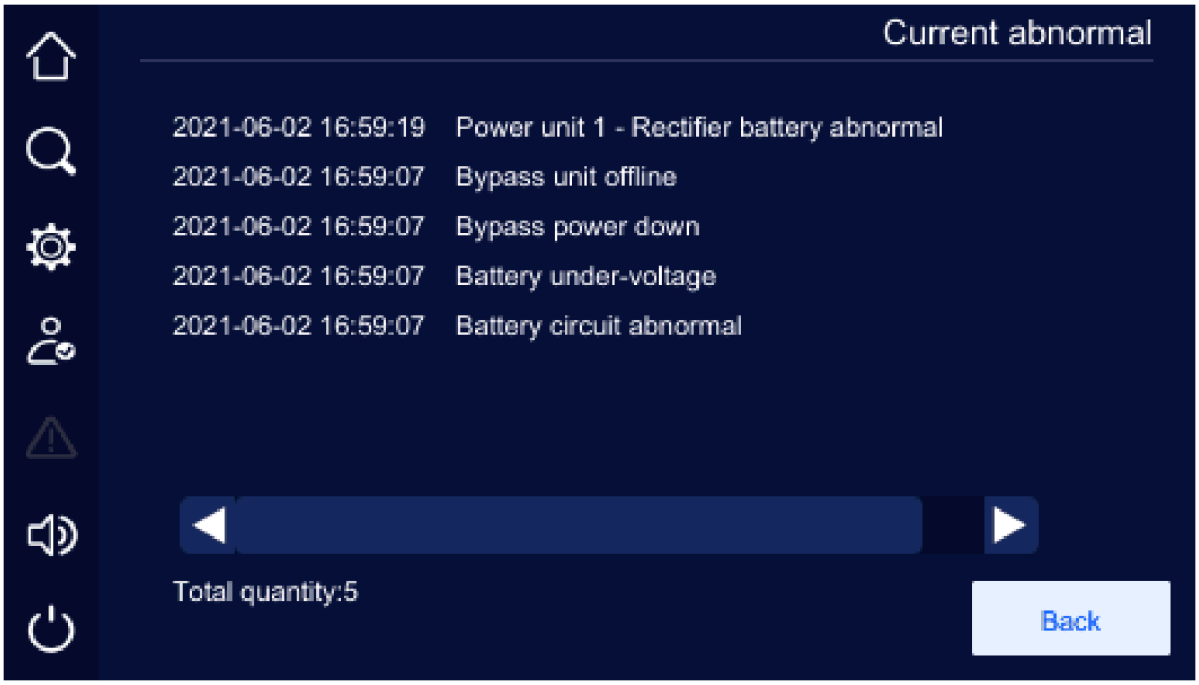

FIGURE 4-12 Current abnormal information

4.4 Buzzer Control Function

When a unit or the system is abnormal, the buzzer sounds. Click the icon at the left to mute or unmute the buzzer. If a new fault occurs after muting, the buzzer is re-enabled automatically.



4.5 Monitor Page

4.5.1 Mains Input Information

On the main page, click the  icon to open the mains information page (Figure 4-13).

1. The page shows the mains phase voltage, mains current and mains frequency.

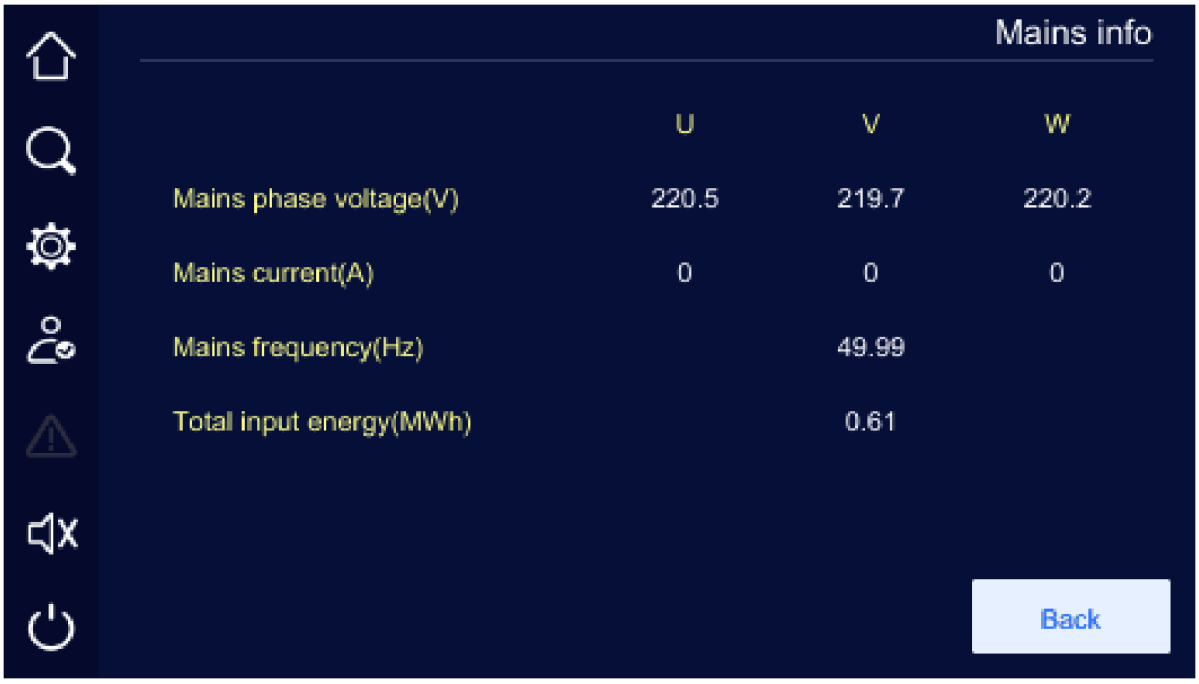

FIGURE 4-13 Mains information

4.5.2 Bypass Input Information

On the main page, click the  icon to open the bypass information page (Figure 4-14).

1. The page shows the bypass phase voltage, bypass current and bypass frequency.

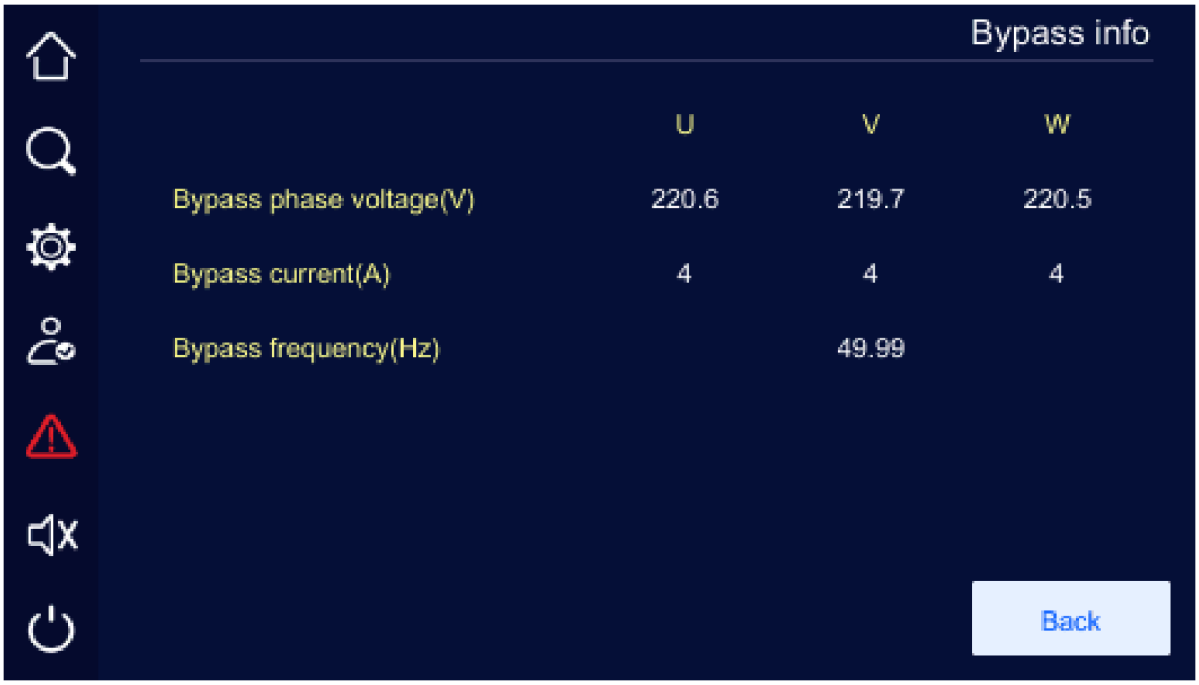

FIGURE 4-14 Bypass information

4.5.3 Battery Input Information

On the main page, click the icon to open the battery information page. For lead-acid batteries, it shows the positive and negative half-string voltage, battery charge/discharge current, battery remaining capacity, battery remaining time, battery temperature and battery status.

The charging or discharging current is shown according to the battery status (Figure 4-15).

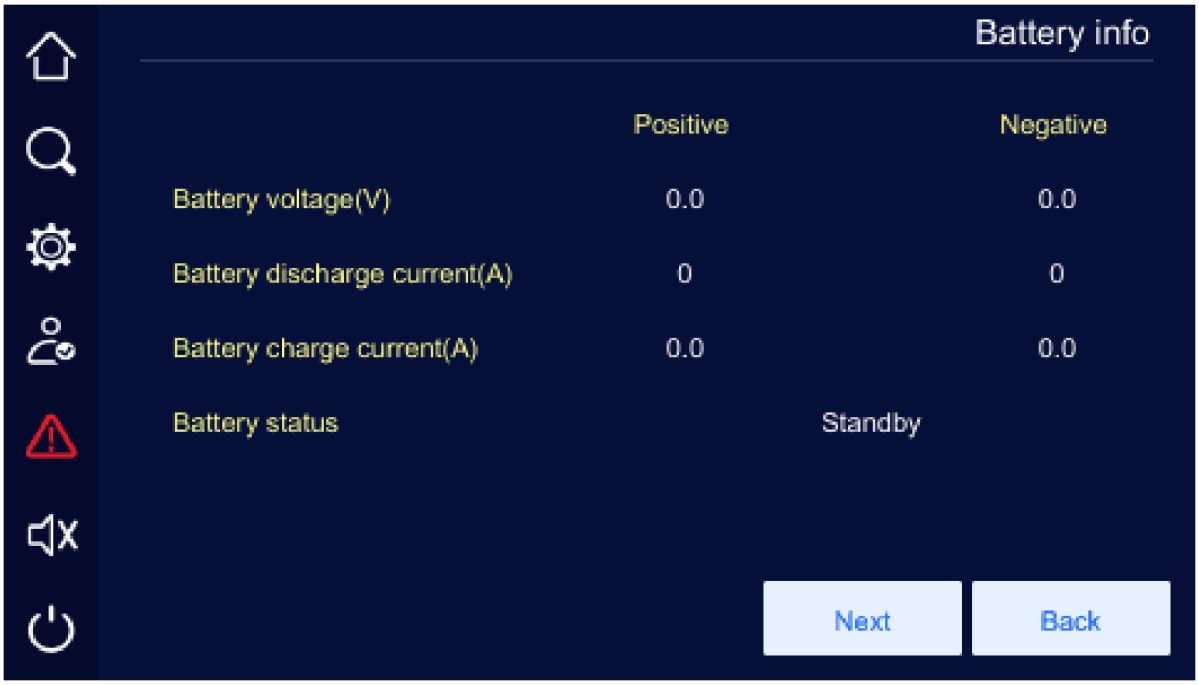

FIGURE 4-15 Battery information

4.5.4 Rectifier Information

On the main page, click the icon to open the rectifier information page (Figure 4-16).

1. The page shows the input phase voltage, input current, input frequency, battery voltage, charge current and discharge current.

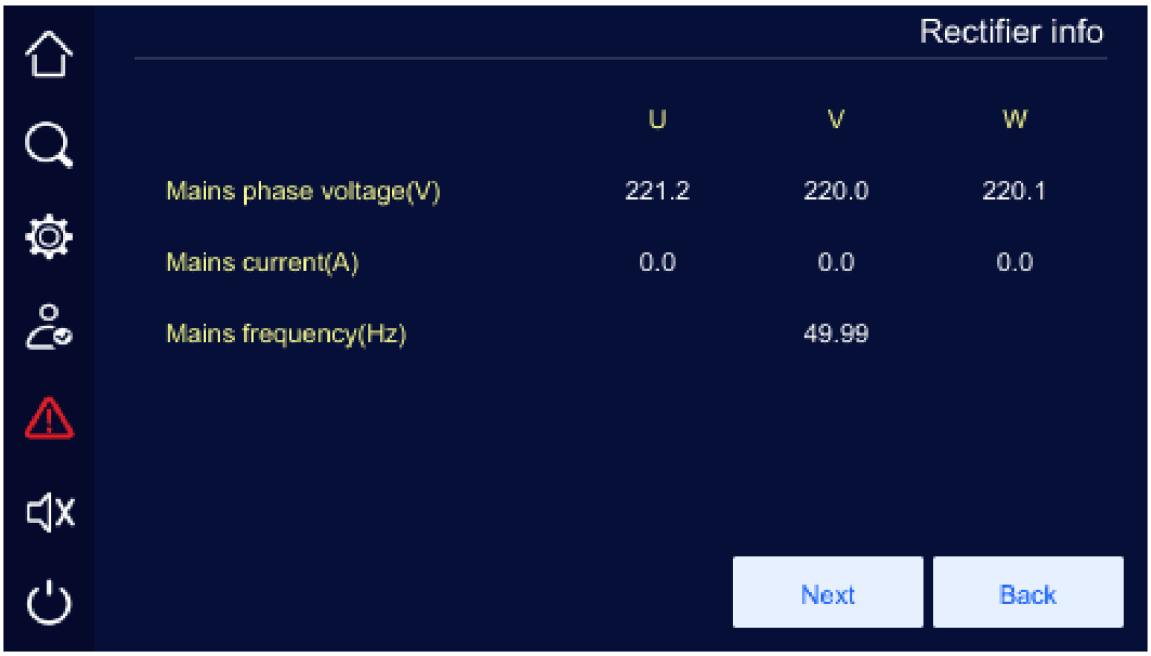

FIGURE 4-16 Rectifier information

4.5.5 Inverter Information

On the main page, click the icon to open the inverter information page (Figure 4-17).

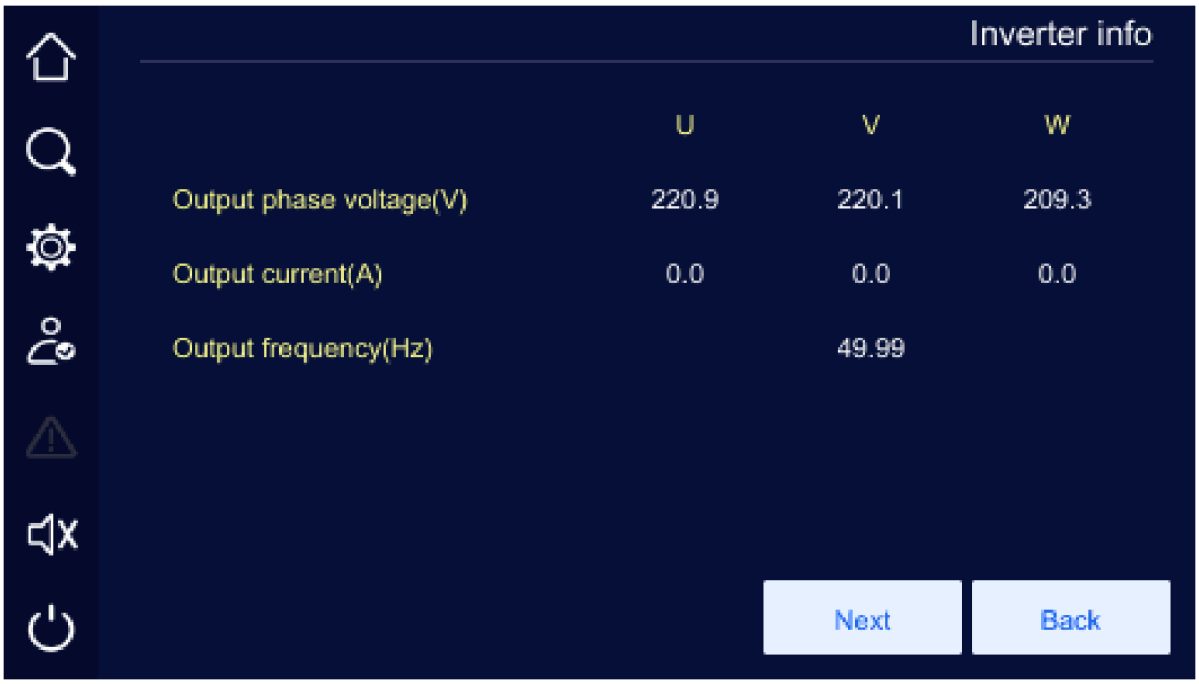

FIGURE 4-17 Inverter information

4.5.6 Output Information

On the main page, click the icon to open the output information page (Figure 4-18).

1. The page shows the output phase voltage, output line voltage, output current, output active power, output apparent power, output load rate, output power factor, output frequency and total output electricity.



FIGURE 4-18 Output information

4.6 Setting Manage

On the main page, click the icon to open the Setting Manage page (Figure 4-19). It contains: cabinet setting, battery setting, battery test, output setting, smart mode, dry contact, screen setting, password setting, comm. setting and record manage.

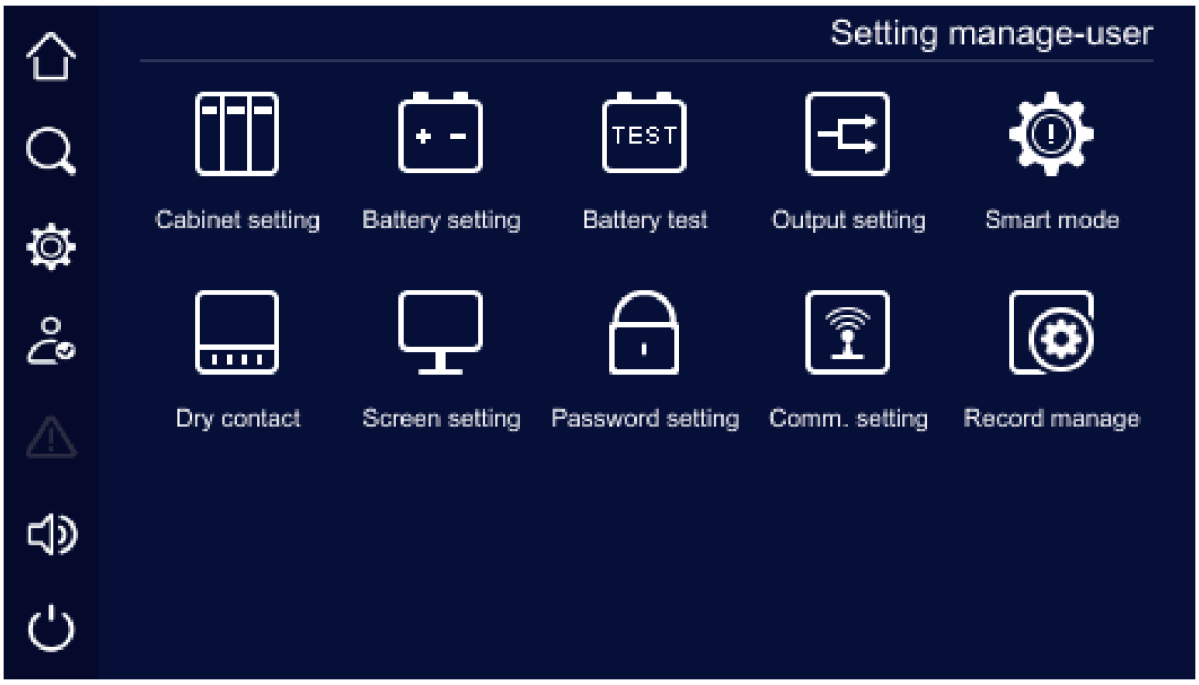

FIGURE 4-19 Setting manage

4.6.1 Cabinet Setting

On the Setting Manage page, click the icon to open the cabinet setting page (Figure 4-20).

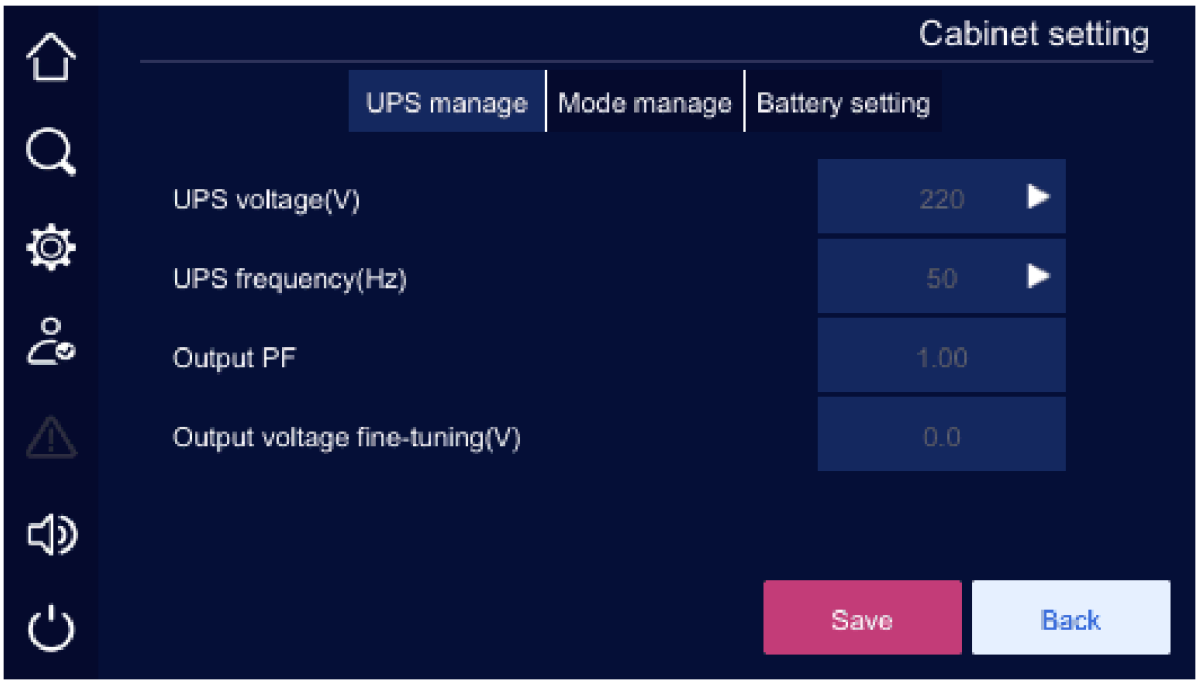

FIGURE 4-20 Cabinet setting

4.6.2 Battery Setting

On the Setting Manage page, click the  icon to open the battery setting page (Figure 4-21).



FIGURE 4-21 Battery setting

4.6.3 Battery Test

On the Setting Manage page, click the  icon to open the battery test page (Figure 4-22).

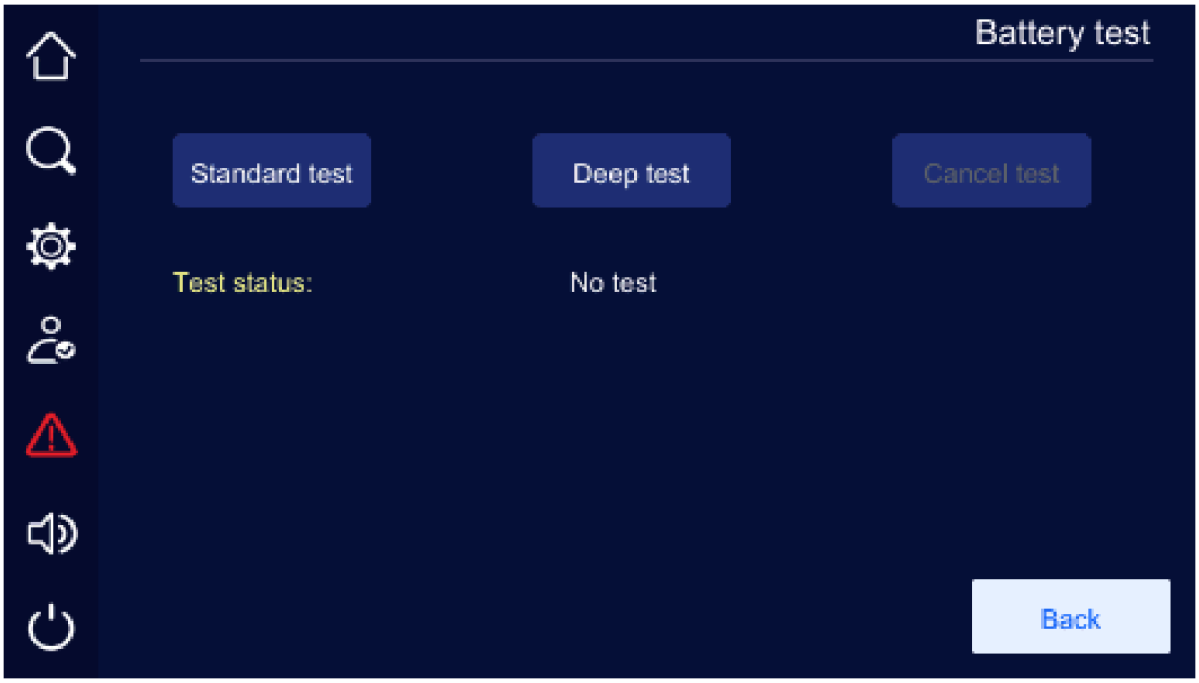

FIGURE 4-22 Battery test

4.6.4 Output Setting

On the Setting Manage page, click the  icon to open the output setting page (Figure 4-23).



FIGURE 4-23 Output setting

4.6.5 Smart Mode

On the Setting Manage page, click the  icon to open the smart mode page (Figure 4-24).

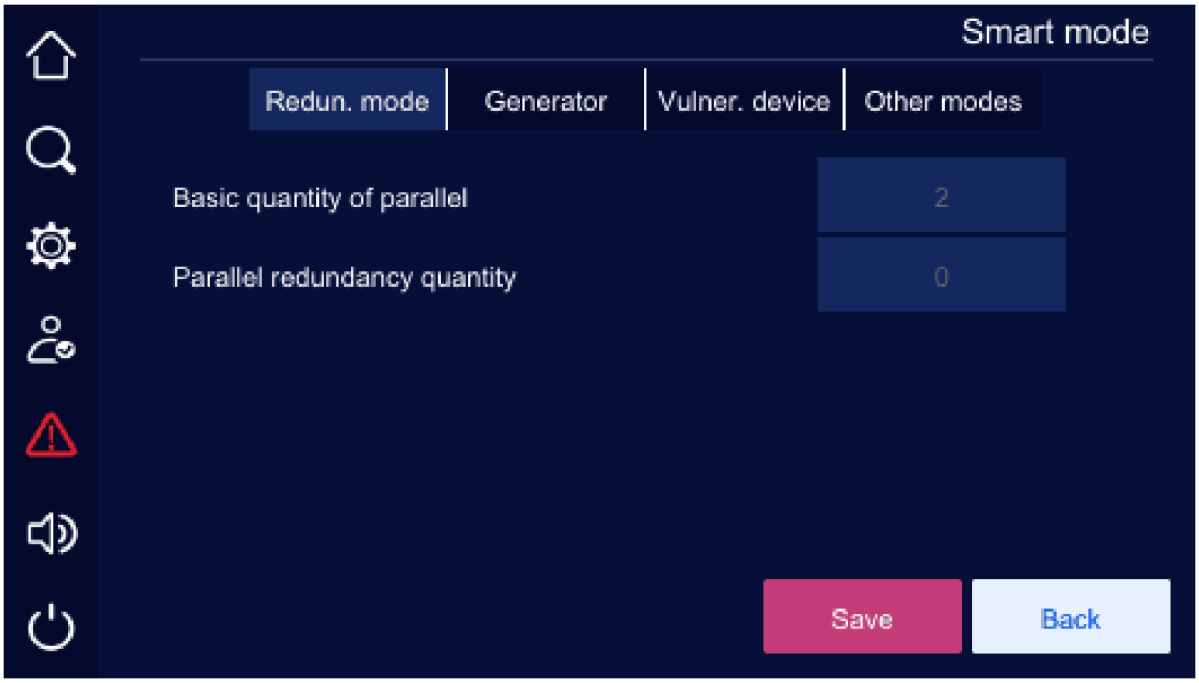

FIGURE 4-24 Smart mode

4.6.6 Dry Contact

On the Setting Manage page, click the  icon to open the dry contact page (Figure 4-25).



FIGURE 4-25 Dry contact

4.6.7 Screen Setting



On the Setting Manage page, click the icon to open the screen setting page (Figure 4-26).



FIGURE 4-26 Screen setting

4.6.8 Password Setting

On the Setting Manage page, click the icon to open the password setting page (Figure 4-27).

27. 

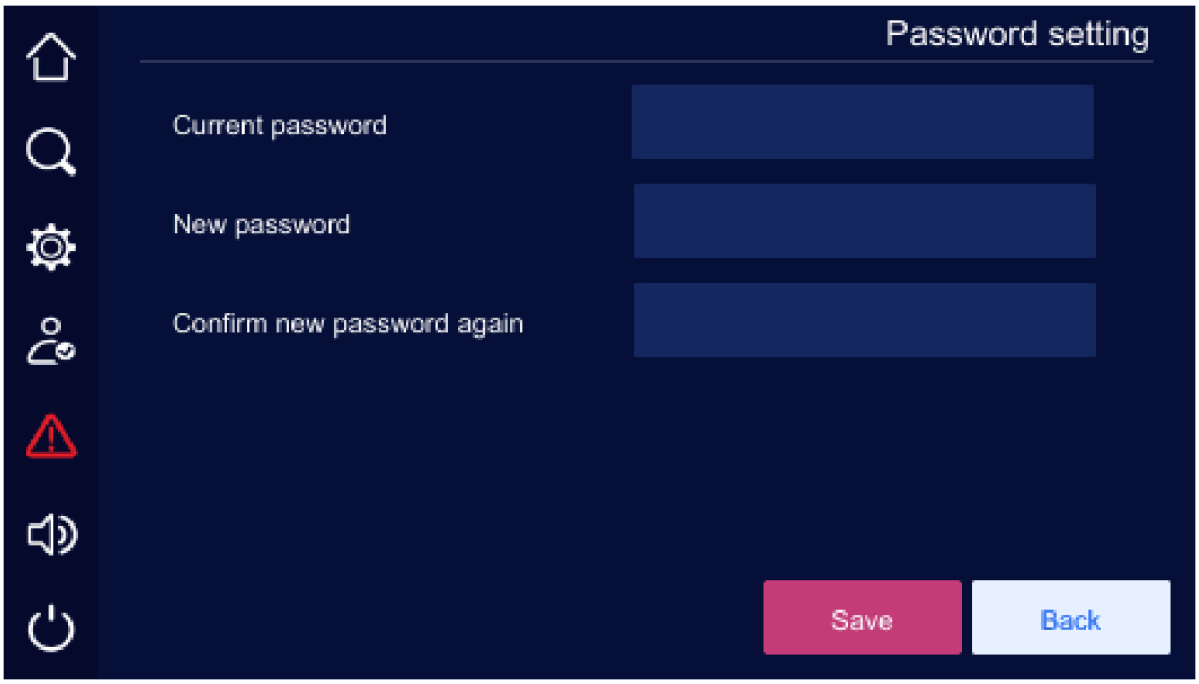

FIGURE 4-27 Password setting

4.6.9 Communication Setting

On the Setting Manage page, click the 

icon to open the communication setting page (Figure 4-28).

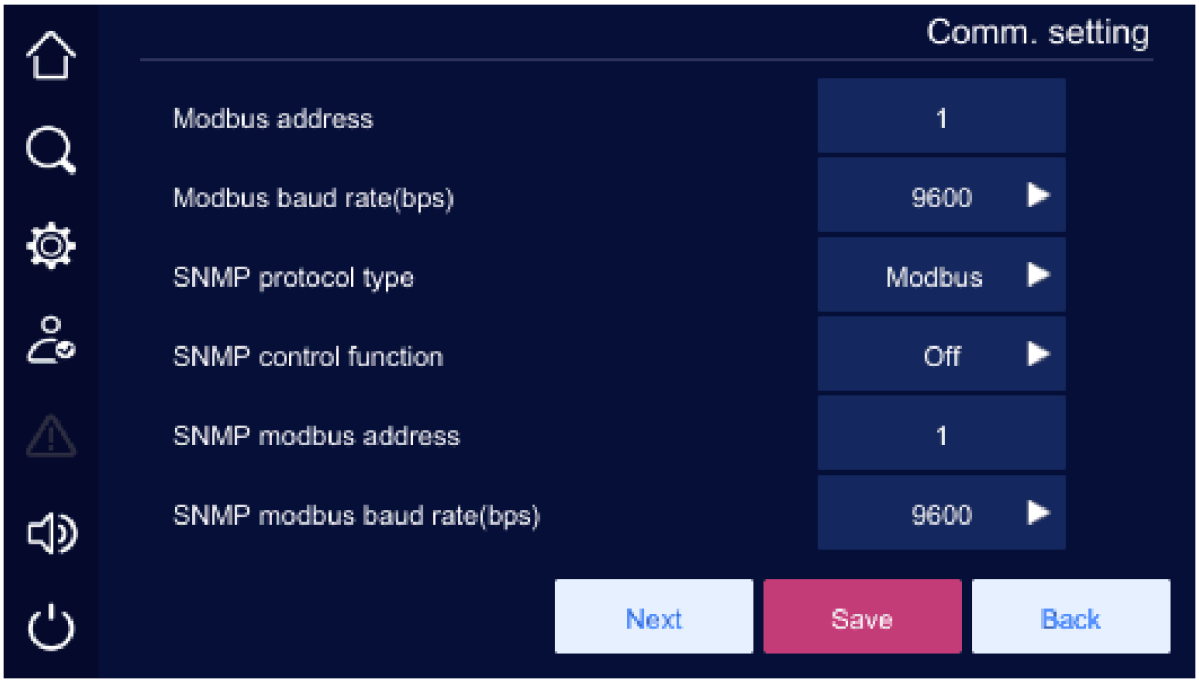

FIGURE 4-28 Communication setting

4.6.10 Record Manage

On the Setting Manage page, click the  icon to open the record manage page (Figure 4-29).

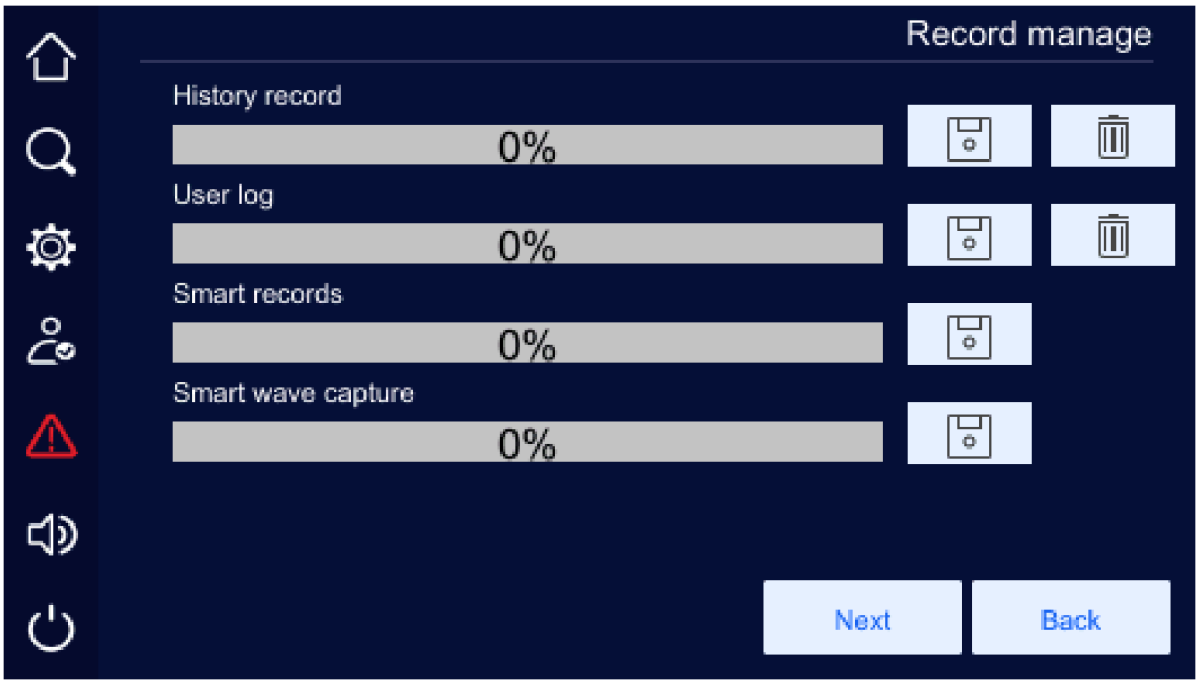

FIGURE 4-29 Record manage

4.7 Information Manage

On the main page, click the  icon to open the Information Manage page (Figure 4-30).

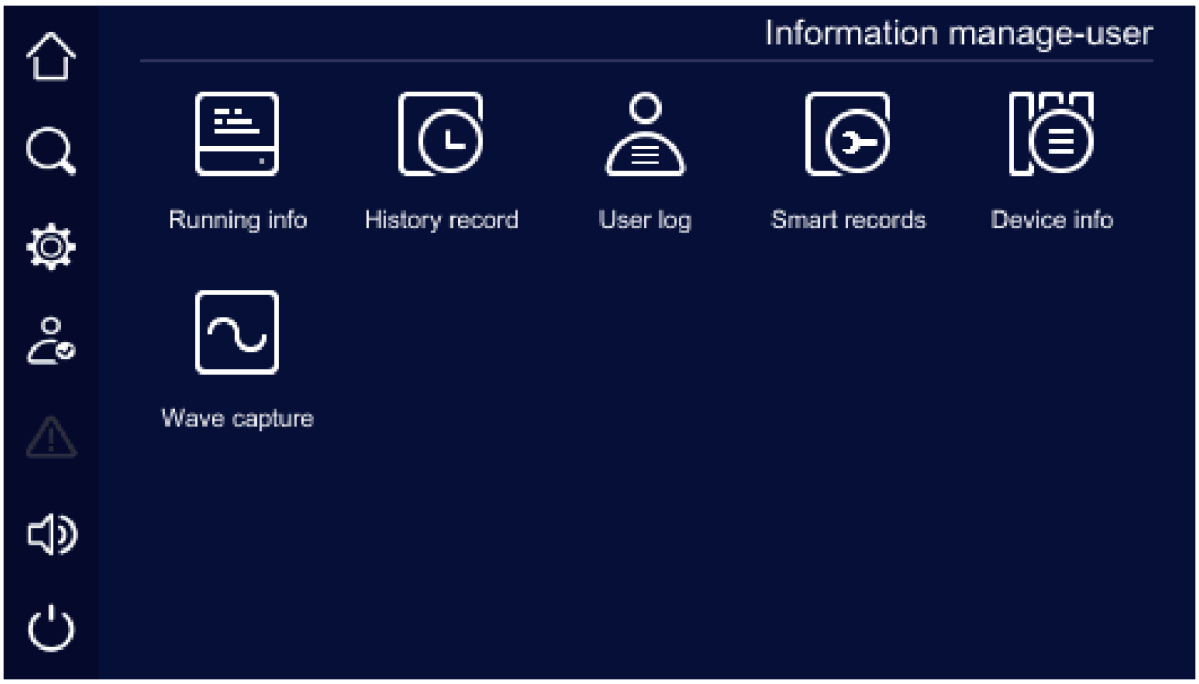

FIGURE 4-30 Information manage

4.7.1 Run Information



On the Information Manage page, click the icon to open the run information page (Figure 4-31).

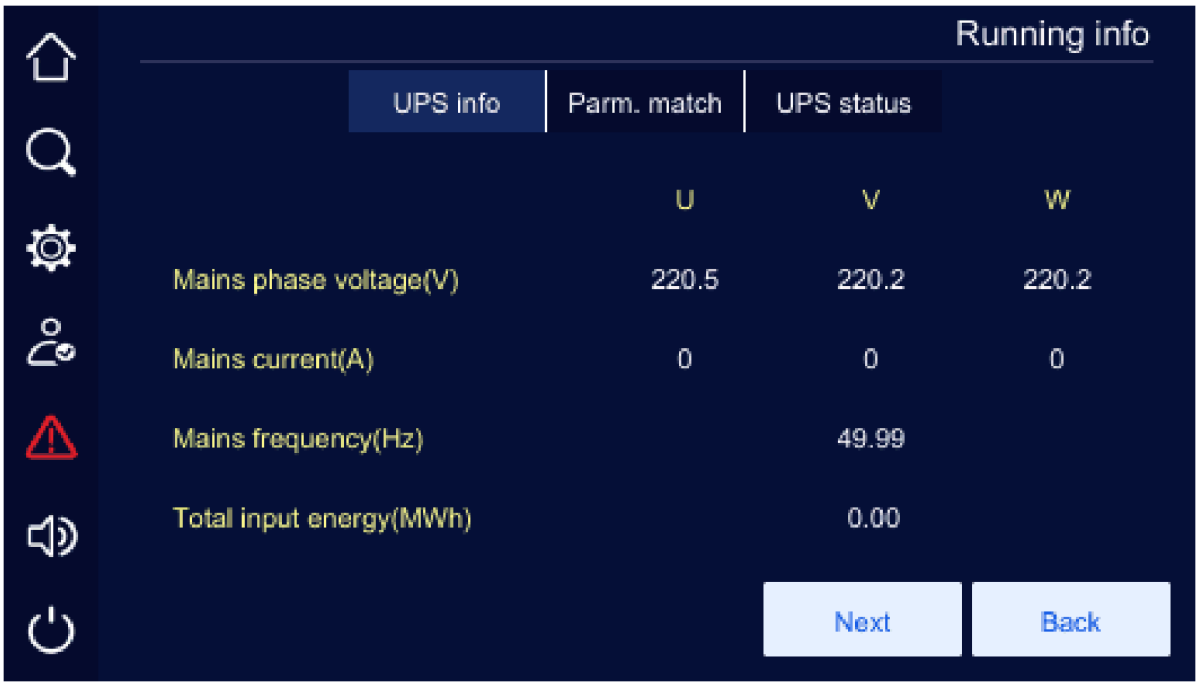

FIGURE 4-31 Run information

4.7.2 History Record

On the Information Manage page, click the  icon to open the history record page (Figure 4-32). The page shows the fault and alarm history of the system and of each unit.

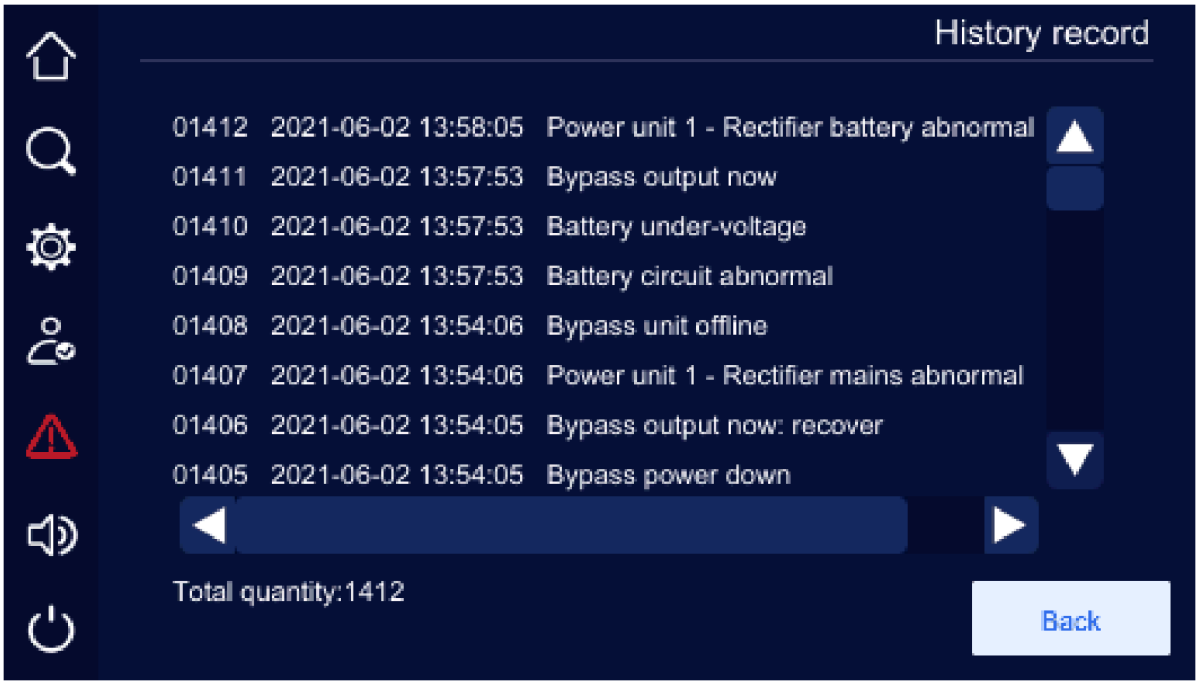

FIGURE 4-32 History record

CAUTION

Up to 10,000 records are stored. When this number is exceeded, the oldest records are overwritten. Records are listed newest first.

4.7.3 User Log



On the Information Manage page, click the icon to open the user log page (Figure 4-33). The page shows the record of parameter changes made by users.

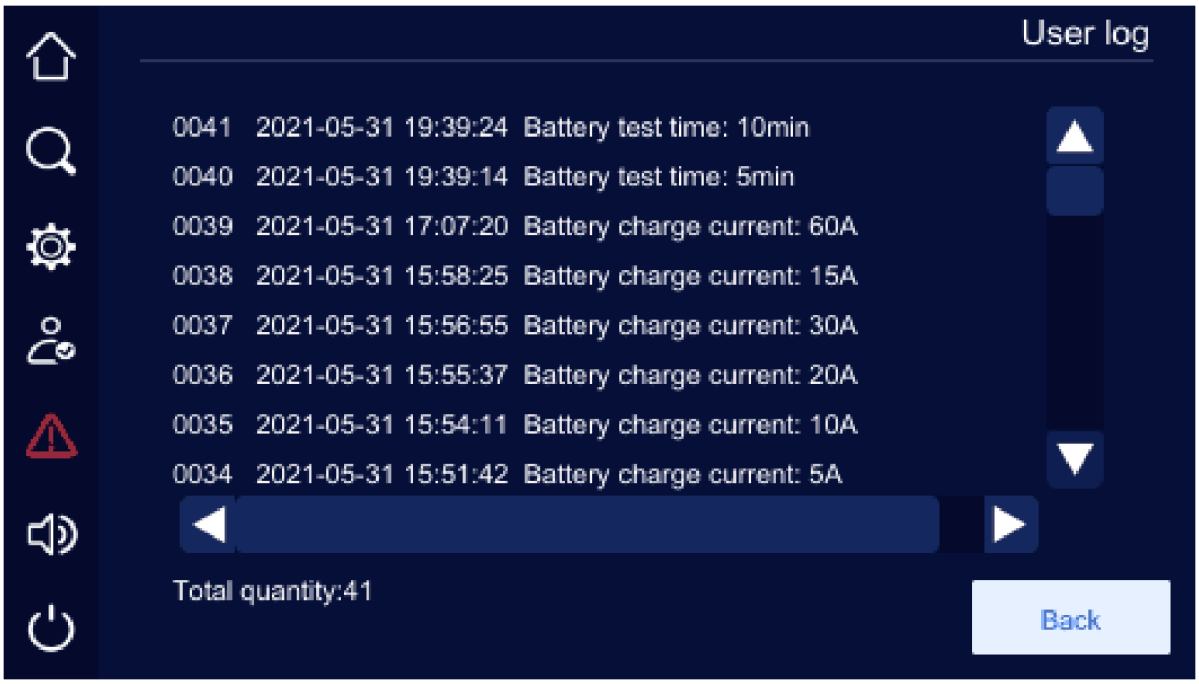

FIGURE 4-33 User log

CAUTION

Up to 10,000 records are stored. When this number is exceeded, the oldest records are overwritten. Records are listed newest first.

4.7.4 Smart Record

On the Information Manage page, click the 

icon to open the smart record page (Figure 4-34).



FIGURE 4-34 Smart record

4.7.5 Smart Wave Capture

On the Information Manage page, click the 

icon to open the smart wave capture page (Figure 4-35).

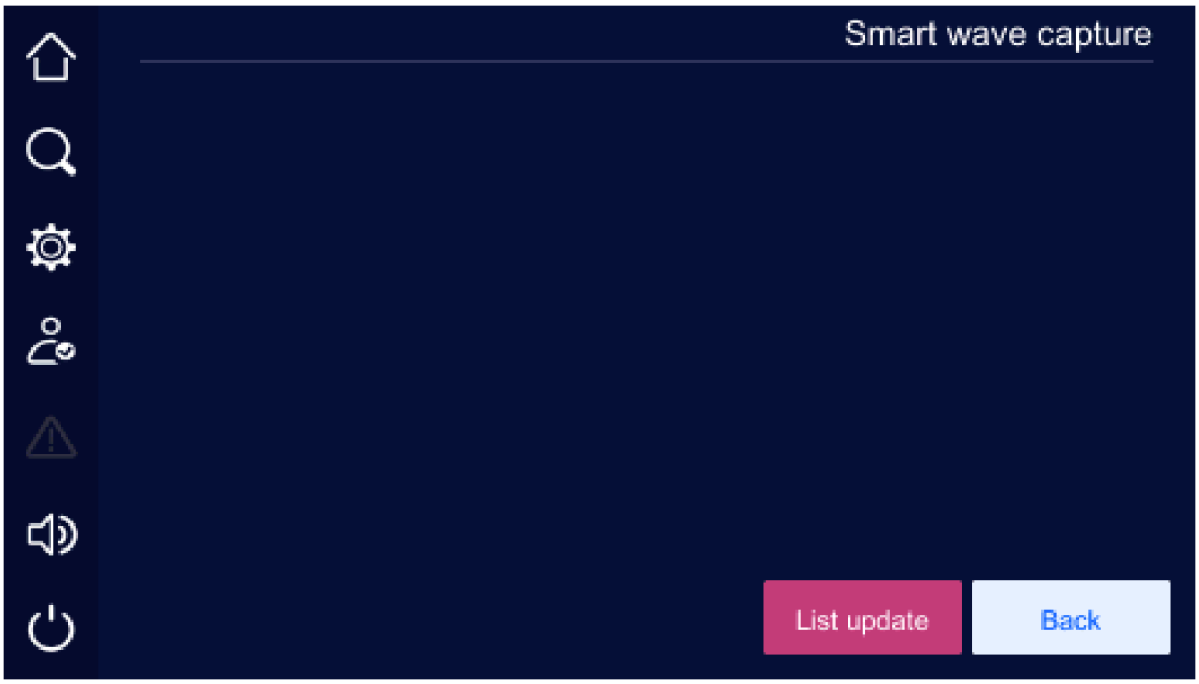

FIGURE 4-35 Smart wave capture

4.7.6 Device Information

On the Information Manage page, click the 

icon to open the device information page. It shows the product name, model, serial number, product version, status, etc. (Figure 4-36 to Figure 4-39).

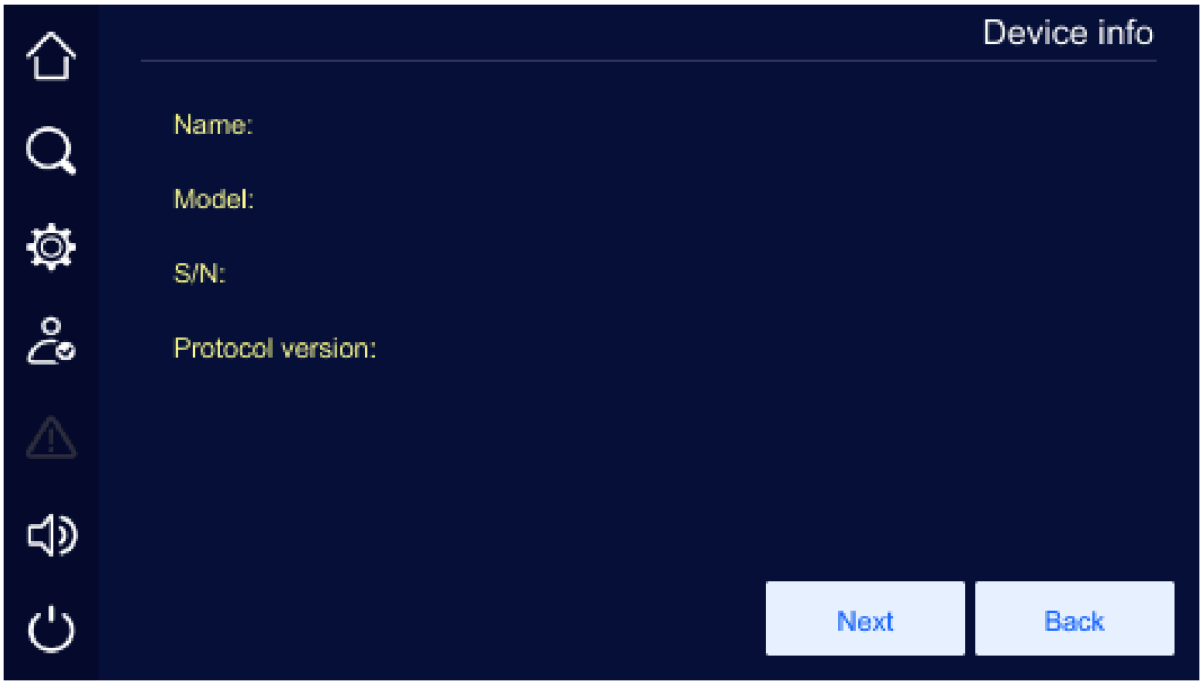

FIGURE 4-36 Product information 1

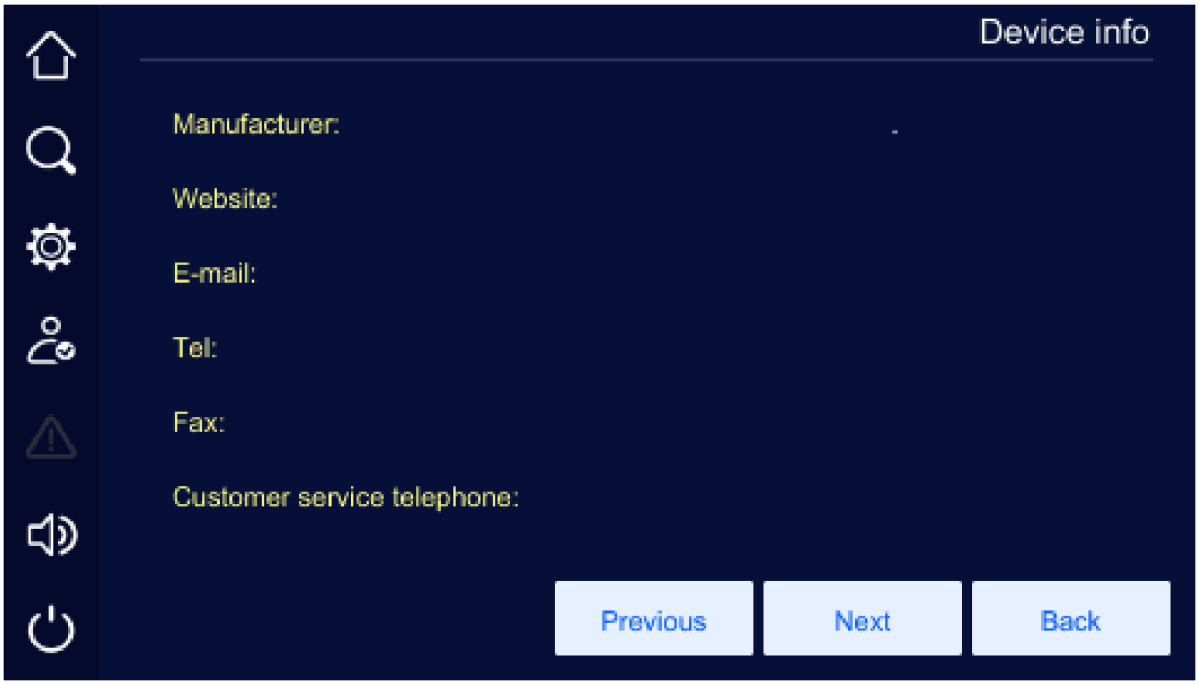

FIGURE 4-37 Product information 2

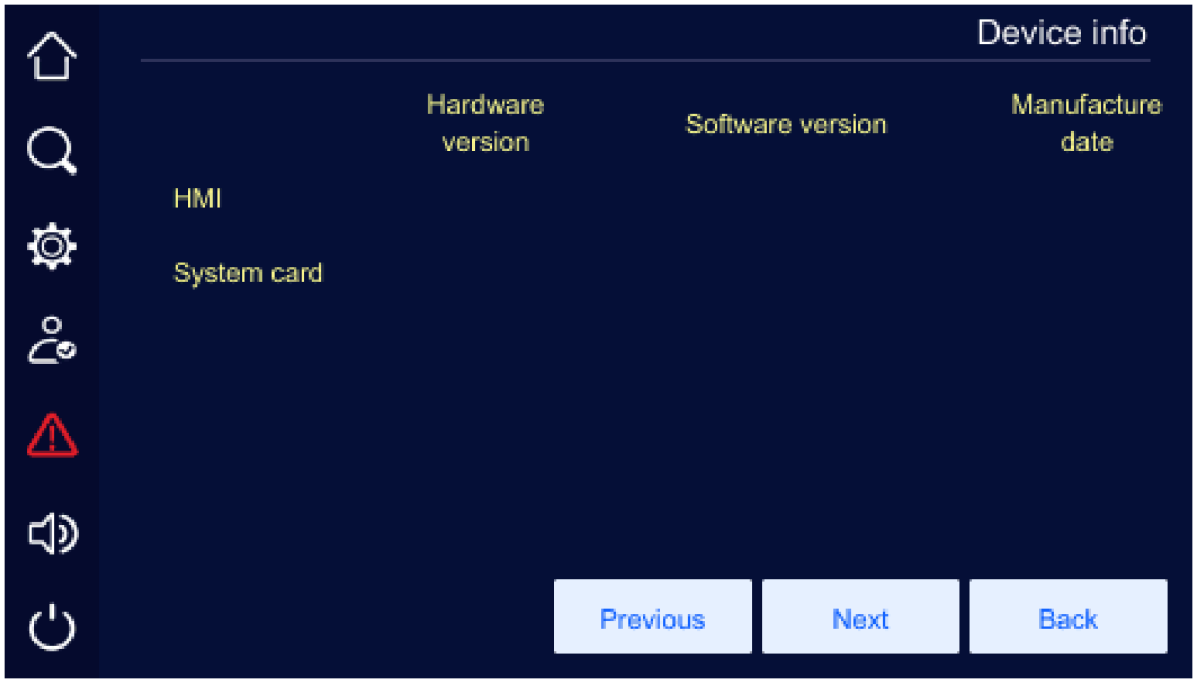

FIGURE 4-38 Product information 3

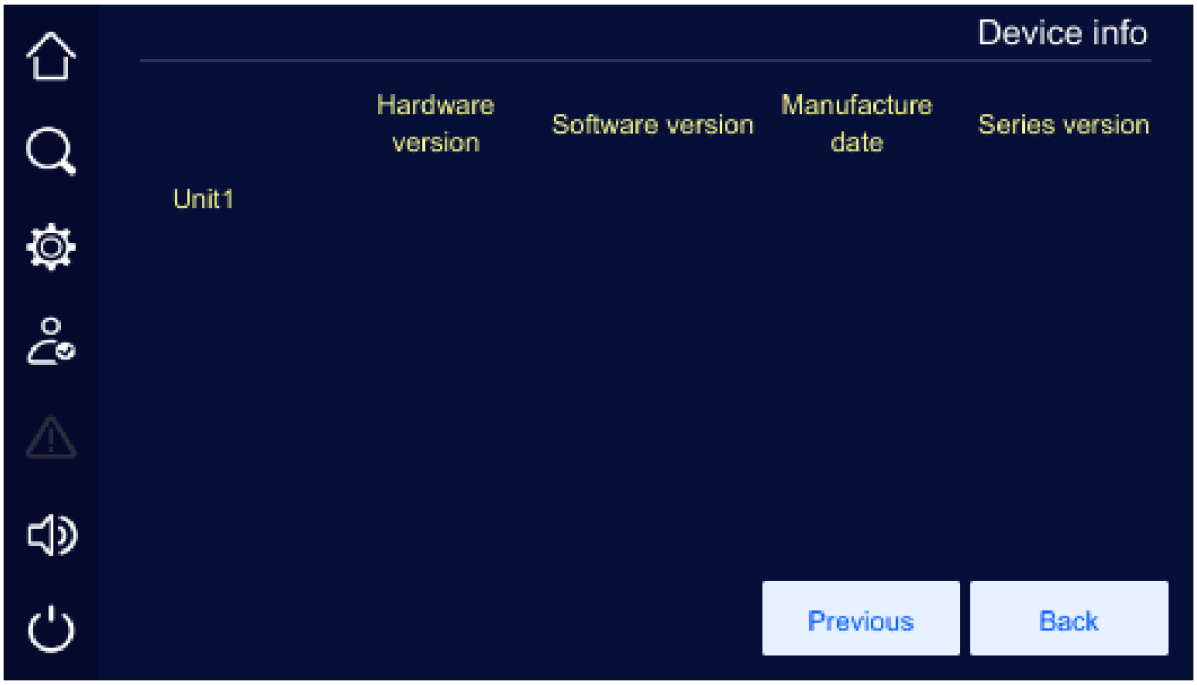

FIGURE 4-39 Product information 4

4.8 ON/OFF

On the main page, click the icon to open the ON/OFF page. When the system is off, click the icon to open the confirmation page (Figure 4-40), then click Confirm to start the UPS.

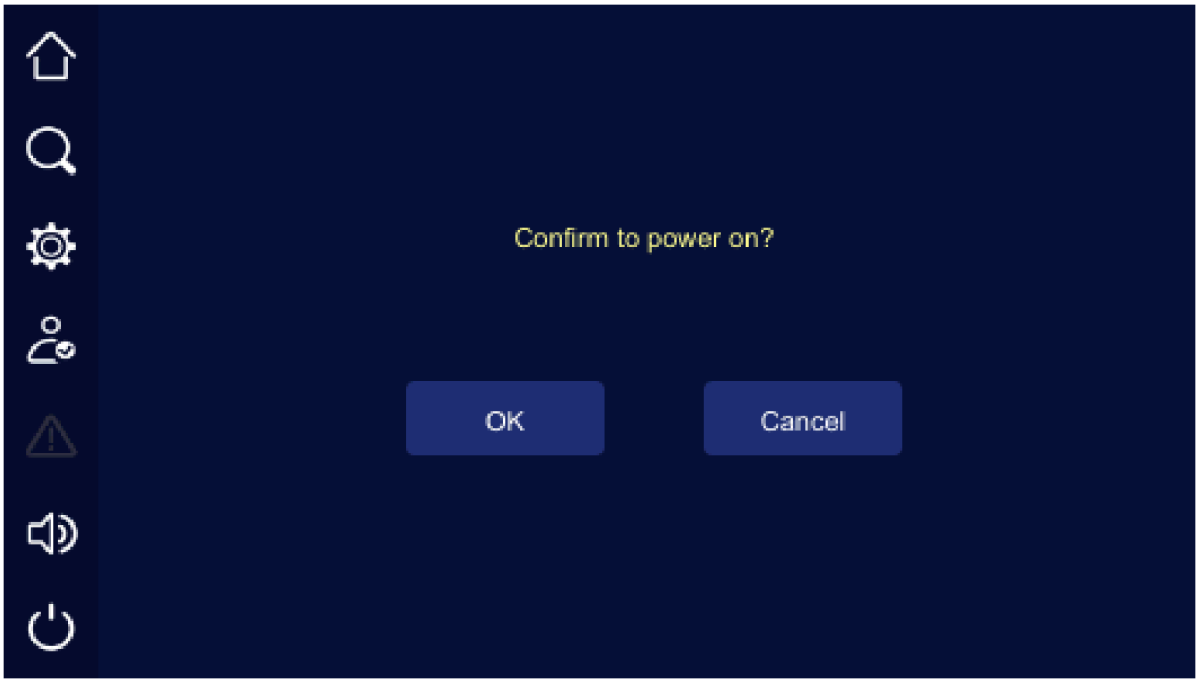

FIGURE 4-40 Power on prompting

CHAPTER 5

05 Use and Operation

This chapter describes operation: operating precautions, operating procedure, start-up and shutdown of a single UPS and of a parallel system.

IN THIS CHAPTER

5.1 Operating Precautions
5.2 Operation Procedure
5.3 UPS Start and Shutdown
5.4 Parallel System Startup and Shutdown

5.1 Operating Precautions

- Before starting the UPS, check the load. The load must not exceed the rated output power of the UPS, otherwise overload protection is triggered.
- Do not use the <ON> and <OFF> buttons on the UPS panel to switch the load on and off. Avoid starting the UPS frequently.
- When the UPS is running stably, switch on the load. Devices with a high inrush current can trigger the overload protection: start them first. Start high-power devices first, then low-power ones. Before switching off the UPS, switch off the load.
- If the UPS is supplied by a generator during a mains failure, start the generator first and connect the UPS only when the generator is running stably; otherwise the UPS or the load may be damaged.
- If a transformer is connected to the output, its rating must not exceed 1.5 times the UPS output power; otherwise the UPS may not work correctly.

5.2 Operation Procedure

Before starting the UPS for the first time, carry out the checks in 5.3.1; switch on the UPS only when all checks are passed. The same checks are required after a long period out of use. The operating procedure is shown in Figure 5-1.

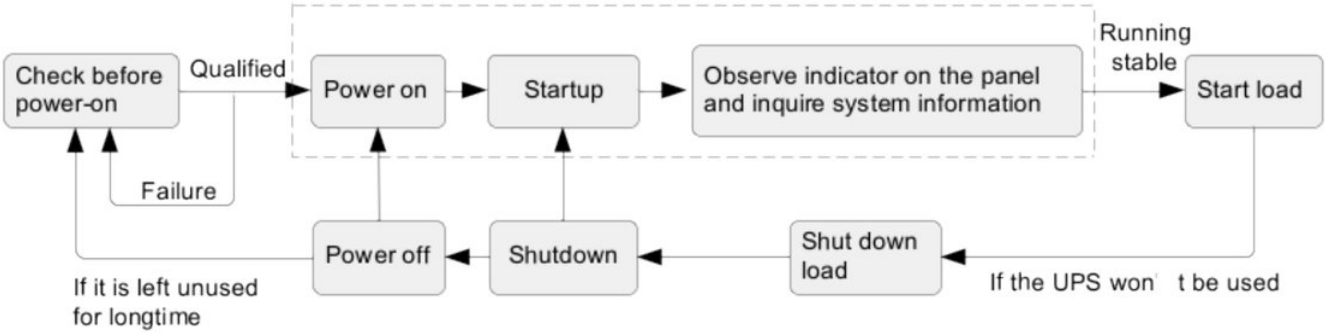

FIGURE 5-1 Operation procedure

5.3 UPS Start and Shutdown

5.3.1 Check before Startup

Before start-up, carry out the following checks. Start the UPS only when all checks are OK.

PROCEDURE

1. Ensure that the mains switch (POWER), bypass switch (BYPASS), output switch (OUTPUT), maintenance bypass switch (MAINTENANCE) are all OFF.

2. Check the load.

- Make sure the load is not an inductive load such as motors, fans or air-conditioners; these loads should be supplied directly from the mains.
- Make sure the load is switched off. The load must not exceed the rated output capacity of the UPS, otherwise overload protection is triggered.

3. Make sure there is no short circuit between live and neutral, or between live and earth, at the input and at the output.
4. Measure the AC voltage at the mains input terminals (POWER): it must be within 160-280 V; otherwise the UPS can only be started from battery.
5. Measure the DC voltage at the battery input. The positive half-string voltage must be above +11.5 V × number of blocks in that half-string, and the negative half-string below -11.5 V × number of blocks. Check the polarity to avoid a wrong battery connection.
6. Make sure the auxiliary contact of the battery switch is connected to one of the input dry contacts of the bypass unit, and set the corresponding function on the touch screen.

5.3.2 UPS Startup

PROCEDURE

1. Check again that all items of 5.3.1 Check before Startup are correct.
2. Close the limit switch of every power unit.
3. Switch on the bypass switch → mains switch → external battery switch; the UPS starts in bypass mode. (For a cold start from battery (no mains): switch on only the external battery switch, then press the battery cold-start button on the bypass unit for more than 3 s to power up the system.)
4. Start the inverter.

- Startup method 1: ON button pair on the panel. When the green indicators of all power units flash slowly, press the ON button pair on the panel for 3 s to start the inverter.
- Startup method 2: Touch screen

On the main page of the touch screen, click the  icon to open the ON/OFF page (Figure 5-2), then click Confirm to start the inverter.

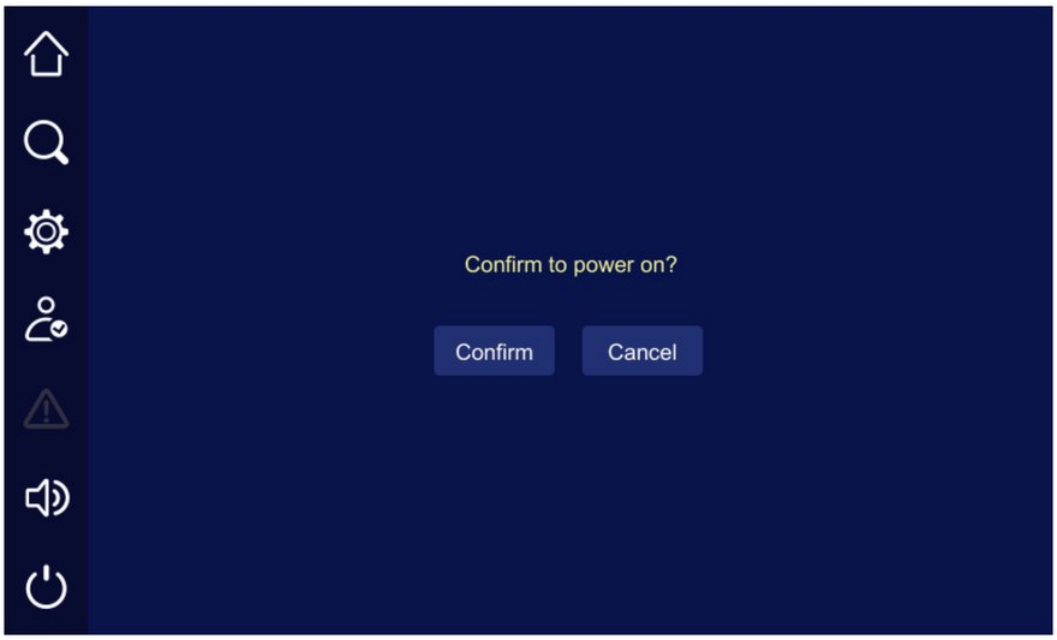

FIGURE 5-2 Power on prompting

5. When the inverter starts, the UPS transfers the load to the inverter. Check on the status display that the system is on inverter, and check on the real-time data of the touch screen that the three-phase output voltage and frequency are normal.
6. Switch on the output switch and check with a multimeter that the output voltage and frequency are normal. The UPS is then ready for use.
7. Switch on the load: high-power devices first, then low-power ones.

5.3.3 UPS Shutdown

CAUTION

If the bypass is normal, the system transfers to bypass mode when the UPS is shut down; if the bypass is abnormal, the system has no output after shutdown. Before shutting down, make sure the load is switched off or can tolerate a loss of power at any time.

PROCEDURE

1. Switch off the load.
2. Shut down the inverter.

- Shutdown method 1: OFF combination button on the panel

Press the OFF button pair on the panel for 3 s: the system transfers from inverter output to bypass output. Check on the touch screen that the system is in bypass mode.

- Shutdown method 2: Touch screen

On the main page, click the  icon to open the ON/OFF page (Figure 5-3), then click Confirm to shut down the inverter.

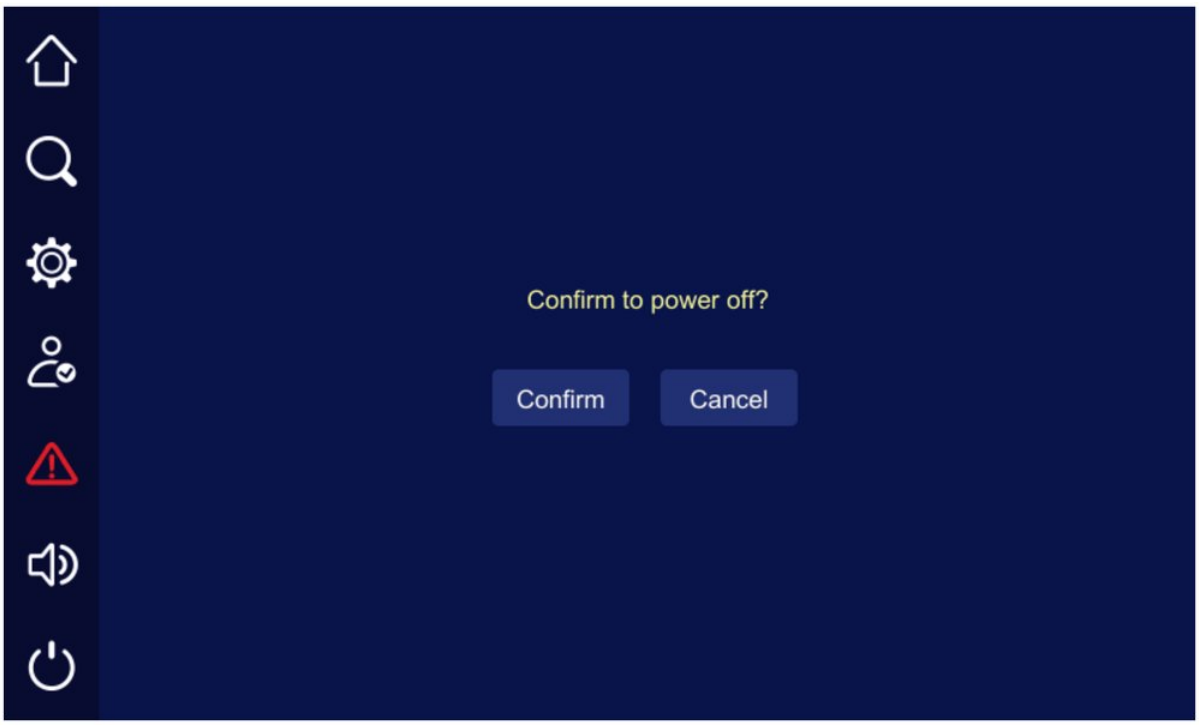

FIGURE 5-3 Power off prompting

3. Switch off the external battery switch → mains switch → bypass switch → output switch.
4. When the touch screen and all LED indicators are off, the UPS is completely shut down.

5.3.4 Switch to Bypass Mode Manually

CAUTION

Before shutting down the inverter, make sure the bypass is normal. If the bypass is abnormal, shutting down the inverter manually leaves the system without output and the load supply is interrupted.

Shut down the UPS inverter as described in Step 2 of 5.3.3 UPS Shutdown. The system transfers to bypass automatically.

> **NOTE**
> If the bypass voltage or frequency is outside the set limits, shutting down the inverter leaves the system without output and the load supply is interrupted.

5.3.5 Switch to Maintenance Bypass Mode From Inverter Output

CAUTION

The following operation may only be carried out by qualified personnel. AEC accepts no liability for problems caused by untrained persons.

PROCEDURE

1. On the touch screen, click the ON/OFF icon to open the ON/OFF page, then click Confirm to shut down the inverter.

> **NOTE**
> The inverter can also be shut down by pressing the OFF button pair on the panel for 3 seconds, but this is not recommended.

2. When the UPS has transferred to bypass and the energy flow on the touch screen shows bypass output, set the maintenance bypass switch to ON.
3. Switch off the mains switch→external battery switch→bypass switch.
4. Switch off the output switch. When the touch screen and all LED indicators are off, maintenance can begin (the maintenance bypass circuit and the terminals remain live).

CAUTION

During maintenance, never close (switch on) the output switch (OUTPUT).

5.3.6 Switch to Inverter Output from Maintenance Bypass

CAUTION

Before transferring from maintenance bypass back to inverter, make sure the bypass input is normal.

PROCEDURE

1. Switch on the bypass switch → mains switch → external battery switch → output switch.
2. When the power is normal and the energy flow on the touch screen shows bypass output, set the maintenance bypass switch to OFF. The load is now supplied by the bypass.
3. Start the inverter.

When the green indicators of all power units flash slowly, open the ON/OFF page on the touch screen, select the ON/OFF icon and click Confirm to start the inverter. The UPS transfers to inverter output.

> **NOTE**
> The inverter can also be started by pressing the ON button pair on the panel for 3 seconds, but this is not recommended.

5.3.7 Emergency Power Off(EPO)

> **CAUTION**
> Use the EPO only in an emergency.

When the external EPO button is pressed, the UPS goes into emergency stop: the touch screen shows EPO protection and the buzzer sounds continuously.

> **CAUTION**
> 1. The external EPO button is optional.
> 2. After the EPO button is pressed, the UPS has no output and the load supply is interrupted.
> 3. In maintenance bypass mode, the UPS output remains live after the EPO button is pressed.

5.3.8 Emergency Power Off Recovery

PROCEDURE

1. Make sure the EPO dry contact of the bypass unit (connected to the external EPO switch) is no longer in the emergency-stop state.
2. Open the mains input switch, output switch, bypass switch and battery switch, and wait until all indicators are off and the system is completely de-energised.
3. Close the mains switch (POWER), the bypass switch (BYPASS) and the battery switch: the system starts again and the EPO state is cleared.

5.4 Parallel System Startup and Shutdown

5.4.1 Start Parallel System

> **CAUTION**
> - Before starting the parallel system, carry out 5.3 UPS Start and Shutdown on each UPS.
> - Before powering on and testing the parallel system, check the input/output cabling and the phase sequence. Do not connect the parallel cables until Step 2.
> - Do not switch on the load until the parallel system is fully started; keep all load switches off.
> -

PROCEDURE

1. Measure the voltage and frequency on the supply side of the input switches of all UPSs (mains switch and bypass switch), or of the external input distribution switch. Voltage range: 160-280 V; frequency range: 40-70 Hz.
2. Connect the parallel cables, then switch on the mains switch and bypass switch of all UPSs (keep the output switches of all UPSs OFF). If the input power is normal, the rectifiers start automatically and the touch screens power up.
3. Connect the battery to the parallel system.

4. If the monitor page of each UPS has no alarm, switch on the battery switch of each UPS. If there are several battery strings, first switch on the switch of each string, then the main switch between the UPS and the batteries. Measure the voltage at the battery switch with a multimeter (with several battery strings, measure at the switch of each string, then at the main switch). Ensure that the battery connection is normal (the "Battery circuit abnormal" alarm on the main page of touch screen disappears within 2 min).
5. Check that all system alarms have cleared. If there is a fault alarm, stop the start-up and contact AEC service; continue only when all faults have been cleared.
6. Start the inverter of each UPS. Make sure that each UPS is in bypass mode and that the system has no alarm, then start the inverter of each UPS manually; all UPSs transfer to inverter mode.
7. Measure the output voltage and output frequency of each UPS. After each UPS has transferred to inverter mode (check the running status on the touch screen), check in the real-time data of the touch screen that the output voltage and frequency of each UPS are normal. Measure the output voltage on the supply side of the output switch in the output distribution cabinet, or of the external output distribution switch, to make sure that the inverter output voltage is normal (output voltage = output voltage setting ±2 V) and that the inverter output frequency is normal (output frequency = output frequency setting ±0.1 Hz). Record the measured RMS output voltage of each UPS.
8. Compare the output voltage of each UPS. After measuring the output voltage and frequency of each UPS, compare the output voltages and make sure that the RMS phase voltages of any two UPSs differ by less than 5 V before paralleling. If not, the UPS with the larger voltage difference must not be connected to the parallel system until it has been adjusted again.
9. Shut down the inverter of each UPS. Make sure that no UPS has an alarm, then shut down the inverter of each UPS manually. All UPSs transfer to bypass mode.
10. Check the phase sequence of bypass.

Switch on the output switch of UPS 1(make sure that the main load switch is off; otherwise the load is supplied as soon as the output switch of UPS 1 is closed), keep output switches of other UPSs off, set the multimeter to AC voltage and measure the voltage across the output switch of UPS 2 on phase A (one probe on the UPS side, the other on the load side of the switch). Measure phases B and C in the same way. If the phase sequence is right, the voltage difference of each phase should be less than 5V. If the phase sequence is not right, at least one phase voltage difference is greater than 5V. Check the bypass phase sequence of each of the other paralleled UPSs in the same way (no switching is needed: keep the output switch of UPS 1 on and the output switches of the other UPSs off). If the phase sequence of all UPSs is correct, go on to the next step. If the phase sequence of any UPS is not right, power off the system and check the input and output wiring of each UPS.

11. Switch on the output switches of all UPSs.

With no alarm on any UPS, switch on the output switches of all UPSs one after the other. Check that the outputs of all UPSs are in parallel.

12. Start the inverter of each UPS.

Make sure that the system has no alarm, then start the inverter of each UPS manually, one after the other. The system transfers to inverter output. Check that no alarm appears.

13. Shut down the inverter of each UPS.

Make sure that no UPS has an alarm, then shut down the inverters of all UPSs; the system transfers to bypass mode.

14. Switch on the main load switch.

When the parallel system is in bypass mode, switch on the main load switch; the load is supplied by the bypass.

15. Start the inverter of each UPS, one after the other; the system transfers to inverter mode.

5.4.2 Shutdown Parallel System

CAUTION

If the bypass is normal, the system transfers to bypass mode when the UPSs are shut down; if the bypass is abnormal, the system has no output after shutdown. Before shutting down, make sure the load is switched off or can tolerate a loss of power at any time.

PROCEDURE

1. Switch off the load of the parallel system and let the UPSs run without load to dissipate internal heat.
2. Shut down all UPSs as described in 5.3.3 UPS Shutdown; the system transfers to bypass.
3. Open, in this order, the main load switch, the output switch (OUTPUT) of each UPS, the battery switch, the bypass switch (BYPASS) and the mains switch (POWER).

NOTE

To shut down the UPSs only (the system transfers to bypass and the load stays supplied), perform Step 2 only; to power off the whole UPS system, perform all the steps above.

5.4.3 Emergency Power Off (EPO)

SINGLE UPS RUNNING

Pressing the EPO button of the UPS or the system EPO button shuts down the UPS and switches off all outputs.

MULTI UPS RUNNING IN PARALLEL SYSTEM

- EPO linkage is enabled

Pressing the EPO button of any UPS or the system EPO button shuts down all paralleled UPSs and switches off all outputs.

- EPO linkage is not enabled

Pressing the EPO button of one UPS switches off the output of that UPS only.

Pressing the system EPO button shuts down all paralleled UPSs and switches off all outputs.

CHAPTER 6

06 Maintenance and Troubleshooting

This chapter covers UPS maintenance, routine battery maintenance, battery replacement precautions and troubleshooting.

IN THIS CHAPTER

6.1 Maintenance Guide
6.2 Battery Maintenance
6.3 Battery Replacement Precautions
6.4 Troubleshooting

6.1 Maintenance Guide

Proper maintenance keeps the device in the best condition and extends its service life.

6.1.1 Safety Precautions

To ensure personal safety and protect the equipment, observe the following precautions.

- Dangerous voltage is present inside the UPS even when it is not operating. Before maintenance, check with a multimeter that the UPS is completely shut down and safe.
- Before closing the battery switch, measure the battery voltage with a multimeter and check that it is within range and that the polarity is correct. If not, do not close the battery switch.
- Do not wear conductive metal objects such as rings or watches while working.
- Observe the safety regulations strictly. If in doubt, consult qualified personnel.

6.1.2 Preventive Maintenance

To keep the UPS reliable and efficient, perform the following maintenance tasks every quarter.

- Keep the operating environment free from dust and chemical pollutants.
- Every six months, check that the terminals of the input and output cables are in good contact.
- Check the fans regularly and keep the air vents clear. Repair or replace a damaged fan promptly.
- Check the battery voltage regularly and make sure it is within the normal range.
- Check the UPS status regularly so that any fault is detected in time.

6.2 Battery Maintenance

- Battery charge requirements
  - Before first use, start the UPS and charge the battery for 24 h. The UPS can be used during charging, but if a power failure occurs in this period, the backup time may be shorter than normal.
  - Normally, discharge and recharge the battery every 4 to 6 months: first discharge it to 1/3 of its capacity, then recharge it for at least 24 h.
  - In hot climates, discharge and recharge the battery every 2 months, each time recharging for at least 24 h.
  - If the battery is not used for a long time, recharge it every 3 months for at least 24 h each time.
- Clean the battery cases with a damp cloth. Do not use oil or organic solvents such as petrol or thinners.
- To avoid explosion, keep batteries away from fire and from devices that can produce sparks.

- Avoid deep discharge. Recharge the battery fully immediately after a discharge (within 24 h at the latest) before it is discharged again. Avoid repeated discharges of a battery that has not been fully recharged: this reduces capacity and can damage the battery.
- To avoid excessive discharge after a mains failure, open the battery switch when the UPS is not in use.

6.3 Battery Replacement Precautions

- Dangerous voltage can be present between the battery terminals and earth: measure before touching. Never touch the two battery terminals or bare cable ends of the battery.
- Replace the complete battery string; do not mix new and old batteries.
- New batteries must have the same capacity and type, and come from the same manufacturer, as the replaced ones. Never mix batteries of different capacity, type or manufacturer.
- Recycle the batteries according to the instructions on the battery and local regulations.
- Do not dispose of batteries in fire: risk of explosion.
- Do not open or disassemble the battery: the electrolyte is harmful to skin and eyes.

6.4 Troubleshooting

6.4.1 Common Abnormal Phenomena Diagnosis

If the UPS does not work correctly after start-up, see Table 6-1 for possible causes. Also check whether the fault is caused by external conditions, such as temperature or humidity out of range, or overload.

Table 6-1 covers only simple diagnosis. If the cause is not clear or the problem is not solved, contact AEC service.

TABLE 6-1 Troubleshooting

NO	Abnormal phenomena	Possible reason
1	Mains normal, but the UPS runs on battery and the buzzer beeps intermittently.	Poor contact at a connection point or socket of the mains supply circuit interrupts the AC input.
2	After installation, a fuse blows or the breaker trips when the supply switch is closed.	The three-phase input is wrongly connected (e.g. neutral and earth, or live and earth/enclosure, swapped), or the three-phase output is wrongly connected.
3	After start-up, the UPS outputs 230 V AC, but it runs on bypass.	1. The load is too large and exceeds the rated output capacity of the UPS. Reduce the load or use a UPS with a higher rating. 2. A temporary transfer to bypass caused by load inrush, with automatic return to inverter, is normal.
4	The UPS output is normal after start-up, but the output stops as soon as the load is switched on.	1. Severe overload or short circuit at the output. Reduce the load or find the cause of the short circuit; common causes are a short-circuited output socket or a damaged load device. 2. The loads were not started in order from the highest to the lowest power. Restart the UPS and, when it is running stably, switch on the loads in order from the highest to the lowest power.
5	The UPS works normally after start-up but shuts down automatically after some time.	In battery mode the battery has run out and the UPS has shut down on battery under-voltage protection. This is normal. When the mains returns, the system restarts and recharges the battery automatically. Warning: a battery left in under-voltage for a long time loses service life. After an under-voltage shutdown, if the mains does not return for a long time, open the battery switch to protect the battery; when the mains returns, restart the UPS and fully recharge the battery.
6	After running for some time, the buzzer sounds continuously and the touch screen shows battery low voltage.	The mains voltage is too low, so the UPS runs on battery until the battery reaches under-voltage protection.
7	With mains present the UPS output is normal; without mains there is no output.	1. Battery fault, or the battery string is badly damaged. 2. Charger fault: the battery is not charged and its energy is insufficient. 3. Battery cable not properly connected or poor terminal contact. 4. Battery switch is not closed. 5. After a severe overload the UPS was not restarted and remains on bypass.
8	Long buzzer beep, the DC/AC indicator is red and the UPS transfers to bypass.	See the fault information on touch screen.
9	Mains is present, but the buzzer beeps intermittently.	The mains voltage or frequency is outside the permitted range of the UPS.
10	On mains the UPS works normally; during a power failure the UPS also works normally, but the load equipment stops.	Poor earthing: the voltage between neutral and earth is too high.
11	FAULT indicator of a power unit is on.	The power unit is faulty; replace it promptly.

6.4.2 Emergency Handling of System Faults

1. Emergency handling of a system fault

In case of a system fault, shut down the UPS from the touch screen; if necessary, switch off the load and open the input and output switches of the UPS to avoid further damage. Contact AEC service.

1. Emergency handling of a single power-unit fault

If a power unit fails, it is automatically isolated from the system. Normal operation generally continues, but redundancy is reduced. Shut down the faulty unit, pull it out of the cabinet and contact AEC service.

After the unit has been pulled out, high voltage remains inside it and on the rear connector pins. Wait at least 10 min before opening the cover.

CHAPTER 7

07 Package, Transportation and Storage

This chapter describes packaging, transport and storage of the UPS.

IN THIS CHAPTER

7.1 Package
7.2 Transportation
7.3 Storage

7.1 Package

Observe the orientation marks when packing. The side of the package carries the handling marks "Keep dry", "Fragile", "This way up" and "Stacking limit", and a label with the device model. The logo and the device name are printed on the front of the package.

7.2 Transportation

During transport, observe the handling marks and avoid severe impacts. Place the device in the marked orientation to avoid damage to components. Do not ship flammable, explosive or corrosive materials with the device. Do not leave the device in the open during transit; protect it from rain, snow, liquids and mechanical damage.

7.3 Storage

Store the device in the marked orientation. Keep the package at least 200 mm above the floor and at least 500 mm from walls, heat sources, cold sources, windows and air inlets.

Storage temperature: -20~55 °C. If the device has been transported or stored outside this temperature range, let it stand for more than 4 h before installation and start-up so that its temperature returns to the normal range. The warehouse must be free of flammable, explosive or corrosive materials and harmful gases, and free of strong vibration, impacts and magnetic fields. Under these conditions the device can normally be stored for up to 6 months; after more than 6 months of storage, inspect it again before use. During long storage, charge the battery every 3 months.

APPENDIX A

A Technical Specifications

Index ⌄	Model ›	60K	80K	100K	120K	160K	200K
Input	Input mode	3φ4W+PE					
	Rated input voltage (VAC)	220/230/240 (phase voltage)					
	Input voltage range	Vin = 187-280 Vac: no derating. Vin = 80-186 Vac: linear derating of the rated power.					
	Input frequency range (Hz)	40~70					
	Bypass synchronization tracking range (Hz)	50/60±6					
	Bypass input voltage	220/230/240 (phase voltage)					
	Input power factor	≥0.99					
	Input THDI	Full load:≤3%					
	Battery (VDC)	±192		±216			
	Charge current (A)	30				60	
	Output mode	3φ4W+PE					
	Output wave	Sine-wave					
	Voltage (Vac)	L-N: 220/230/240 L—L: 380/400/415					
	Frequency (Hz)	When the mains is normal: synchronised to the bypass input; When the mains is abnormal (battery mode): 50±0.1 or 60±0.1 (internal oscillator).					
	Three-phase phase error	With three-phase rated balance resistive load≤1°					
	Wave form distortion (THDv)	Linear load≤1%; non-linear load≤4%					

Index ⌄	Model ›		60K	80K	100K	120K	160K	200K
Output	Transfer time inverter/bypass		Synchronization< 1ms; Unsync:<15ms					
	Maximum efficiency		96.5%					
	Overload capacity	Linear load inverter overload capacity	≤105%: long-term running; 105%< load ≤110%: 60min; 110%< load ≤125%: 10min; 125%< load≤150%: 1min; >150%: protect immediately.			≤105%: long-term running; 105%< load ≤110%: 60min; 110% < load ≤125%: 10min; >125%: protect immediatel y	≤105% load: long-term running; 105%< load ≤110%: 60min; 110%< load ≤125%: 10min; 125%< load≤150%: 1min; >150%: protect immediately.	
		Bypass overload capacity	≤130%: long-term running; 130%< load ≤150%: 5min; 150%< load ≤200%: 1s; 200%< load≤300%: 100ms; >300%: protect immediately.				≤130%: long-term running; 130%< load ≤150%:≥5min; 150%< load ≤200%: ≥1s; 200%< load≤300%: ≥100ms; >300%: protect immediately.	
	Current-equalized precision		≤5%					
	Output DC component		-200mV~+200mV					

- Specifications are subject to change without prior notice.

Index ⌄	Model ›	60K	80K	100K	120K	160K	200K
	Dynamic response transient range	When the load changes in the range of 0%~100% or 100%~0%, the output voltage transient range≤5%					
	Load unbalance capacity	100% unbalanced load					
	Manual maintenance bypass	Maintenance bypass switch, no-break transfer.					
	DC start function	Equipped					
	Touch screen display	Three-phase input voltage, input frequency, three-phase output voltage, load, battery voltage, battery charge & discharge current, each unit output current and inner temperature, parameter setting, history record, etc.					
	LED display	Work status and fault indication of UPS.					
	Alarm function	Input abnormal, battery low-voltage, overload, fault					
	Communication function	Dry contacts, RS485, MODBUS (RTU) and RS232 ports; optional SNMP card for remote monitoring.					
	Protection function	Protect for output short-circuit, output over-voltage/ under-voltage, overload, over-temperature, battery under-voltage, comm. abnormal, etc.					
	EMC	Complies with IEC 62040-2:2016, category C3					
	Noise (dB)	<65 (measured 1 m in front of the cabinet)					
	IP protection class	IP20					
	Cooling way	Forced air cooling					
	Work temperature (°C)	-5~40					
	Wiring method	Bottom wiring					
	Size (W×D×H) (mm)	(400±2)×(960±2)×(1200±2)				(600±2)×(1000±2)×(1600±2)	
	Weight (kg)	153	163	165	167	294	296

Dimensions and weights

Overall dimensions in millimetres (W × D × H) and net weights, from the technical data of this manual. Leave the clearances given in the installation chapter around the UPS.

IST7 60 / 80 / 100 / 120 kVA

cabinet (tolerance ±2 mm)



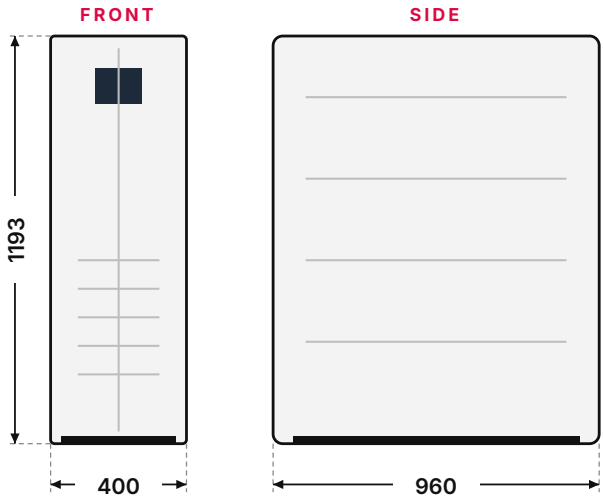

W × D × H	400 × 960 × 1193 mm
60 kVA	153 kg
80 kVA	163 kg
100 kVA	165 kg
120 kVA	167 kg

IST7 160 / 200 kVA

cabinet (tolerance ±2 mm)



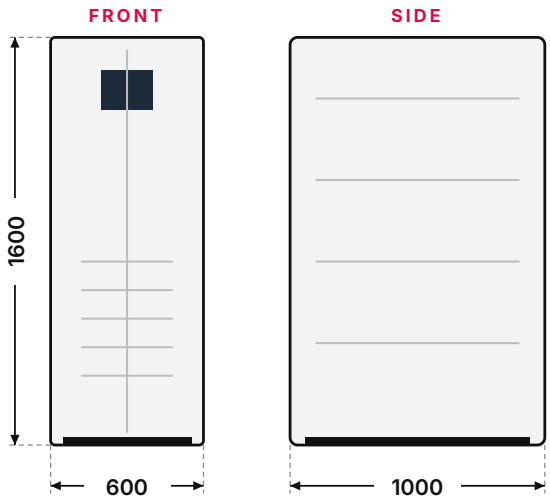

W × D × H	600 × 1000 × 1600 mm
160 kVA	294 kg
200 kVA	296 kg

More on the AEC partner portal

PARTNER PORTAL

portal.emea.aecups.com

- 3D models of every UPS
- Diagrams and drawings
- Video tutorials
- Manuals and catalogues, always up to date

WHATSAPP SUPPORT

+39 393 080 5211

Technical support 24/7. Scan the code to write to AEC service.

AEC International Srl
Via Nerviano 55 · 20045 Lainate (MI) · Italy

Sales +39 02 9415 8991 · info@aecups.com
Service +39 393 080 5211 · service@aecups.com