AEC
Technology Behind Power

USER MANUAL

IST8

1–3 kVA

Online double-conversion UPS with lithium battery, single-phase, rack / tower



English

Read this manual before installing and using the UPS.
Keep it for future reference.

AEC-UM-IST8-EN
Rev. 01 · 11/2026

OVERVIEW

Contents

About this manual 3

1 Safety Description 4

1.1 Safety Instructions 4
1.2 Operating Safety 6
1.3 Operation Environment Requirements 7

2 Overview 8

2.1 Product Introduction 8
2.2 Appearance 9
2.3 Working Principles 13

3 Installation 17

3.1 Installation Notes 17
3.2 Installation Preparation 18
3.3 Unpacking and Inspection 19
3.4 Installation Procedures 20
3.5 Electrical Connection 23
3.6 Electrical Connection Check 26

4 Operation Guide 27

4.1 Checking Before Startup 27
4.2 Start-up 27
4.3 Shutdown 27

5 Maintenance and Troubleshooting 28

5.1 Maintenance Guide 28
5.2 Daily Battery Maintenance 28
5.3 Battery Replacement Safety 29
5.4 Troubleshooting 29

6 Package, Transportation, Storage 31

6.1 Package 31
6.2 Transportation 31
6.3 Storage 31

A Technical Specifications 32

Dimensions and weights 33

BEFORE YOU START

About this manual

This manual describes the AEC IST8 1–3 kVA UPS: online double-conversion, single-phase, with a built-in lithium battery, for 19-inch racks or as a tower. It covers the features, controls, installation, operation, maintenance, transport and storage. Read it before you start, and keep it with the UPS for future reference.



rack and tower

kVA = kW output power factor 1	**0 ms** transfer time, online double conversion
≧ 0.99 input power factor	**LFP** lithium battery built in

MODELS COVERED

- IST8-1: 1 kVA / 1 kW, 2U rack or tower
- IST8-2 and IST8-3: 2 and 3 kVA / 2 and 3 kW, 2U rack or tower
- Built-in lithium iron phosphate (LFP) battery

WHO THIS MANUAL IS FOR

Installers, electricians, IT and facility staff who install, operate and maintain the UPS. Electrical installation and any work inside the UPS must be done by qualified personnel, in line with IEC 60364 and the local wiring rules.

Safety messages

Safety messages in this manual follow ISO 3864 / ANSI Z535. The signal word tells how serious the hazard is.

DANGER	A hazardous situation which, if not avoided, **will** result in death or serious injury.
WARNING	A hazardous situation which, if not avoided, **could** result in death or serious injury.
CAUTION	A hazardous situation which, if not avoided, could result in minor or moderate injury, or in damage to the equipment.
NOTE	Additional information that stresses or completes the text.
TIP	A hint that helps you solve a problem or save time.

Numbers in red circles on a picture are explained in the table or list that follows it. References in red, such as Figure 2-1 or Table 3-1, are links in the PDF. Figures are for reference only: the actual product may differ in detail.

Up and running

The short version: each step points to the full instructions. Read the safety chapter first.

1. **Read the safety instructions.** See Section 1.1, Safety Instructions.
2. **Unpack and check the delivery.** See Section 3.3, Unpacking and Inspection.
3. **Choose the place and prepare the cables and breakers.** See Section 3.2, Installation Preparation.
4. **Install and connect the UPS.** See Section 3.5, Electrical Connection.
5. **Start the UPS.** See Section 4.1, Checking Before Startup.
6. **Check the display and the settings.** See Section 2.3.2, UPS Parameters Setting.
7. **Look after the UPS.** See Section 5.1, Maintenance Guide.

01

CHAPTER 1

Safety Description

This chapter describes the safety instructions. Before performing any work on the UPS, read this user manual carefully, follow the operating and installation instructions, and observe all danger, warning and safety information, to avoid injury and damage to the device caused by incorrect operation.

IN THIS CHAPTER

1.1 Safety Instructions
1.2 Operating Safety
1.3 Operation Environment Requirements

AT A GLANCE **The safety rules of this chapter**



High voltage inside, also after the UPS is switched off: wait before opening it.



Installation, opening and service by qualified personnel only.



Batteries: never short-circuit them, keep them from fire, use only the specified type.



Electrostatic-sensitive boards: wear an earthed wrist strap.



Earth the UPS before connecting anything else.



No liquids or foreign objects inside the UPS.



In case of fire use a dry-powder extinguisher, never water or liquid.



Keep the air inlets and outlets free; respect the clearances.

1.1 Safety Instructions

This section describes the safety instructions for operation and maintenance. For details, refer to the safety instructions in the relevant chapters.

CAUTION

Before operating the device, read the safety instructions and operating instructions in this section carefully to avoid accidents.

The safety messages in this manual, such as DANGER, WARNING and CAUTION, do not cover all safety instructions. They only supplement the general safety instructions for operation.

NOTE

Any damage to the device caused by violating the general safety requirements or the safety standards for design, production and use is not covered by the warranty.

1.1.1 UPS Safety

CAUTION

The input and output voltages of the device are hazardous. Touching them can be fatal. Before installing or operating the device, read this manual carefully and observe all warning labels on the device. Only authorized professionals are allowed to disassemble the device.

DANGER

Device damage or device failure may cause electric shock or fire!

- Before operating the device, check visually that it shows no damage or other potential danger.
- Check that the external devices and circuit connections are safe.

DANGER

During a thunderstorm, do not carry out any high-voltage or AC power work, or work on towers or masts. A thunderstorm generates a strong electromagnetic field: to protect the device from lightning, make sure the installation has adequate lightning protection and earthing in place.

WARNING

Do not connect unbalanced, half-wave rectified or inductive loads to the UPS output, such as air conditioners, blowers, motor starters, electric drills, motors or fluorescent lamps.

WARNING

Do not put fingers or tools into rotating fans: risk of injury or damage to the device.

WARNING

In case of fire, use a dry-powder extinguisher. Do not use liquid extinguishers: risk of electric shock.

CAUTION

Keep the air inlets, air outlets and the area in front of the fans free of objects, to ensure good ventilation.

CAUTION

Do not allow liquids or other objects to enter the device.

CAUTION

This UPS is a class A product. In a residential environment, additional measures may be needed to prevent radio interference.

1.1.2 Battery Safety

⚠ CAUTION

Use only the specified batteries. Other batteries can damage the UPS.

Different brands and types of battery require different charging voltages. Before using a battery, make sure that the charging voltage of the UPS is suitable for it. If in doubt, consult AEC.

⚠ WARNING

Work on batteries must follow the battery instructions, especially for battery wiring. Incorrect work can damage the battery and even cause injury.

- Never short-circuit the battery positive (+) and negative (–) terminals. Tighten all battery connections securely. Never touch two battery terminals or bare wiring terminals at the same time: this can damage the battery or cause injury.
- Prevent electrolyte from leaking out of the batteries: leaking electrolyte corrodes metal parts and circuit boards, causing damage to the device and short circuits on the boards.
- Keep the battery away from fire and from any electrical equipment that can produce sparks, to avoid injury and damage.

1.1.3 ESD Protection

⚠ CAUTION

To prevent electrostatic discharge from damaging sensitive components on the circuit boards, wear an anti-static wrist strap connected to earth before touching them.

1.1.4 Measurement When Power On

⚠ CAUTION

Hazardous high voltage is present inside the device: touching it can cause electric shock. When taking measurements with the device energised, take protective measures (for example, wear insulated gloves).

The measuring instruments must meet the following requirements:

- The range and operating conditions of the measuring instrument suit the site;
- They are connected correctly and according to standard practice, to avoid arcing.

1.2 Operating Safety

High temperatures and high voltages are present inside the UPS. During installation, operation and maintenance, comply with the relevant safety regulations and operating procedures to avoid injury or damage to the device. The safety instructions in this manual only supplement the local safety regulations.

⚠ CAUTION

Operation and wiring of the UPS must be carried out by qualified persons, to ensure that the electrical connections meet the relevant standards.

Before installation, operation or maintenance, installers must be properly trained, know all the safety instructions and know the correct operating methods.

DANGER

Do not connect or disconnect power cables until the power switch is off. Before wiring, make sure that the cables and cable labels match the actual installation.

WARNING

Touching high voltage or the mains, directly or through damp objects, can be fatal.

- Only authorized professionals are allowed to open the UPS. The input and output voltages of the UPS are hazardous. Touching them can be fatal.
- Before maintenance, disconnect the AC supply and the battery to isolate the power input, and check with a voltmeter that the input is disconnected and safe.
- Even with all external power disconnected, residual charge inside the UPS can endanger life. Wait at least 10 minutes for it to discharge before opening the UPS.
- The battery is not isolated from the AC input, so a hazardous voltage may be present between the battery terminals and earth. Treat the battery as live and keep it insulated during installation and use.
- Do not wear conductive objects such as watches, bracelets or rings while working.
- Installers must be qualified for high-voltage and AC power work. Maintenance and repair of the power system may only be carried out by qualified persons.
- High leakage current! Earth the device before making any electrical connection.

WARNING

Do not drill holes in the device. Drilling can damage internal components, and metal debris entering the device can short-circuit the circuit boards.

NOTE

Any change to the system configuration, structure or components will affect UPS performance. Consult AEC before making any change.

1.3 Operation Environment Requirements

The operating environment affects the life and reliability of the device. Do not use the UPS:

- where the operating temperature or relative humidity is outside the technical specifications (operating temperature 0–60 °C, best 0–40 °C: long operation at 40–60 °C may reduce the output power; relative humidity 0–95 %);
- in direct sunlight or in the rain;
- where there is vibration or impact;
- where there is dust, corrosive material, salt or flammable gas;
- in a poorly ventilated or closed space.

02

CHAPTER 2

Overview

This chapter describes the models, features, structure and working principles.

IN THIS CHAPTER

2.1 Product Introduction
2.2 Appearance
2.3 Working Principles

2.1 Product Introduction

The IST8 is a high-frequency, online double-conversion UPS with a built-in lithium battery. It protects file servers, enterprise servers, computers, network equipment, telecom systems, data centres and other equipment that needs high-quality power, in sectors such as post, finance, networks, stock exchanges and railways.

The IST8 has a single-phase AC input and a single-phase AC output.

2.1.1 Model Meaning

“G” in the factory model name means a high-voltage model (208 / 220 / 230 / 240 V); without “G” it is a low-voltage model (110 / 120 V). The AEC IST8-1, IST8-2 and IST8-3 are the 230 V models.

2.1.2 Features

USB COMMUNICATION

Through the USB port and the UPS power management software, the computer can monitor the operating status and electrical data of the UPS and switch it on and off remotely; an SNMP card connects the UPS to the network.

HIGH INPUT POWER FACTOR

Advanced active PFC technology reduces the load on the power grid, for environmentally friendly operation.

HIGH COST PERFORMANCE

Advanced power conversion and high-frequency PWM technologies provide high efficiency, small size and light weight, improve operating reliability and reduce cost.

PERFECT PROTECTION

Protection functions include output over-voltage, battery under-voltage, input over-voltage and triple over-current protection. They overcome typical weaknesses of high-frequency UPS, such as poor adaptability to the grid and low surge withstand capability.

WIDE INPUT VOLTAGE RANGE

Independent rapid-detection technology keeps the battery from discharging down to the lower input limit of 120 V. In mains mode all output power is therefore taken from the grid, so that the battery stays fully charged, the number of discharges is reduced and the battery life is extended.

2.2 Appearance

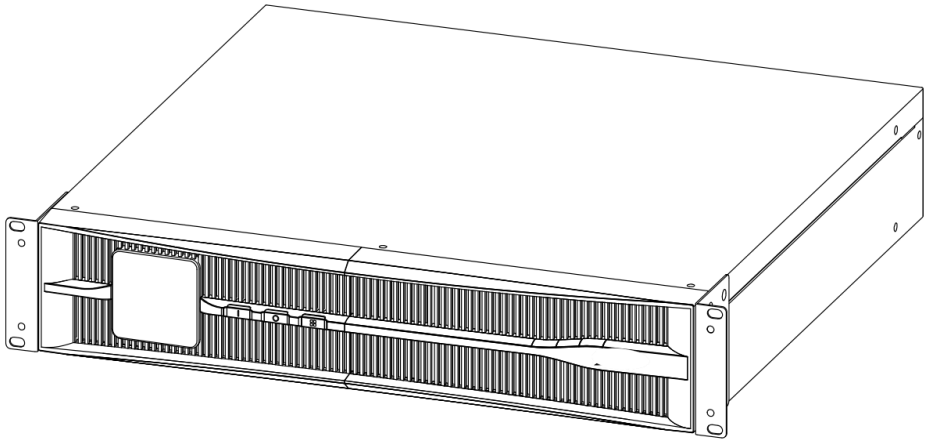

FIGURE 2-1 Appearance of the 1 kVA model

> **NOTE**
> The IST8 models look alike; Figure 2-2 shows the 1 kVA model.

2.2.1 Operation Panel

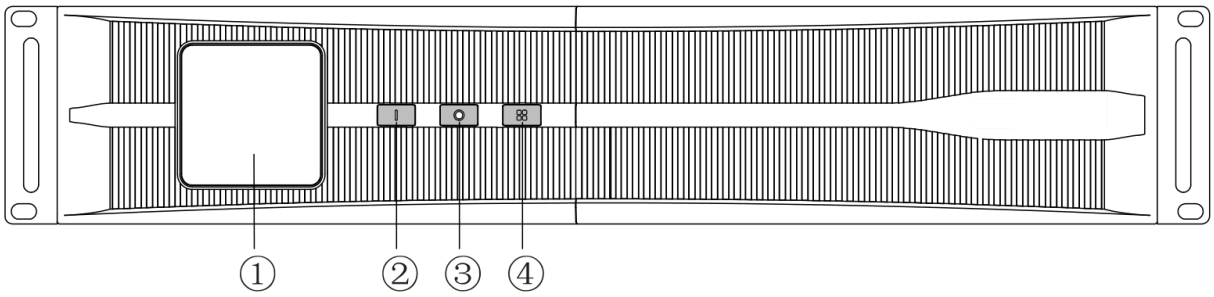

FIGURE 2-2 Operation panel

TABLE 2-1 Operation panel

No.	Key	Name	Function
1	–	LCD	Shows the working status and the settings of the UPS.
2	I	**ON** key	When the UPS is off, press and hold **ON** for 1 s to switch it on. In mains mode, press and hold **ON** for 3 s to run a battery test. In battery mode, press and hold **ON** for 3 s to silence the buzzer (mains failure or battery low-voltage alarm); press and hold it for 3 s again to cancel the silence. In the set page, press **ON** to confirm a setting.
3	O	**OFF** key	When the UPS is on, press and hold **OFF** for 1 s to switch it off.
4	⊞	**SELECT** key	Press **SELECT** to scroll through the displayed information: output voltage, output frequency, input voltage, input frequency, battery voltage, internal temperature, load percentage and fault information. Press and hold **SELECT** for 5 s to enter the set page, then press it to scroll through the settings (ECO/INV mode, TWR/RCK display, inverter output voltage).

LCD PANEL

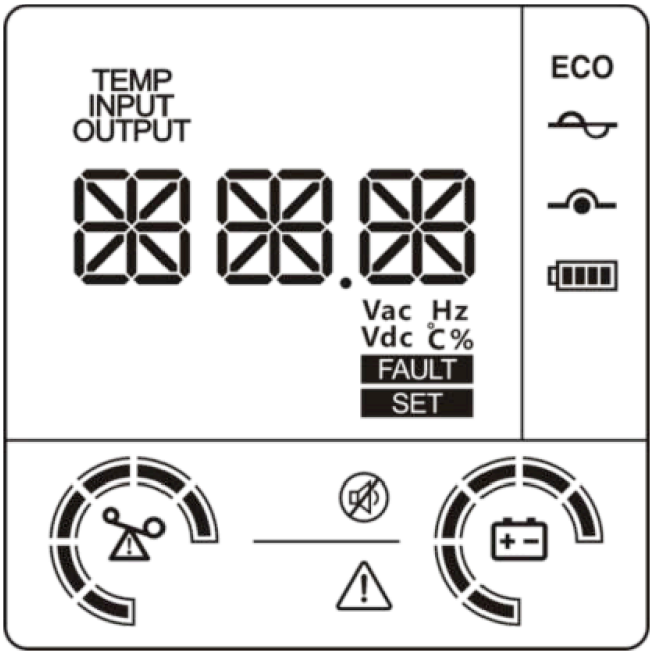

FIGURE 2-3 LCD panel (rack display)

TABLE 2-2 LCD panel

No.	Icon	Description
1	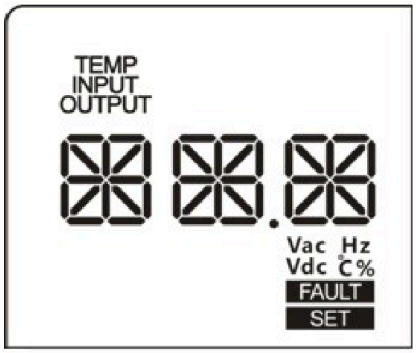	It shows input voltage, input frequency, output voltage, output frequency, load percent, temperature, fault code, parameters or working mode, etc.
2		UPS works in the mains mode
3		UPS works in the bypass mode
4		UPS works in the battery mode

No.	Icon	Description
5	ECO	UPS works in the ECO mode
6		Buzzer silenced
7		UPS failure

2.2.2 Rear Panel View

1KVA

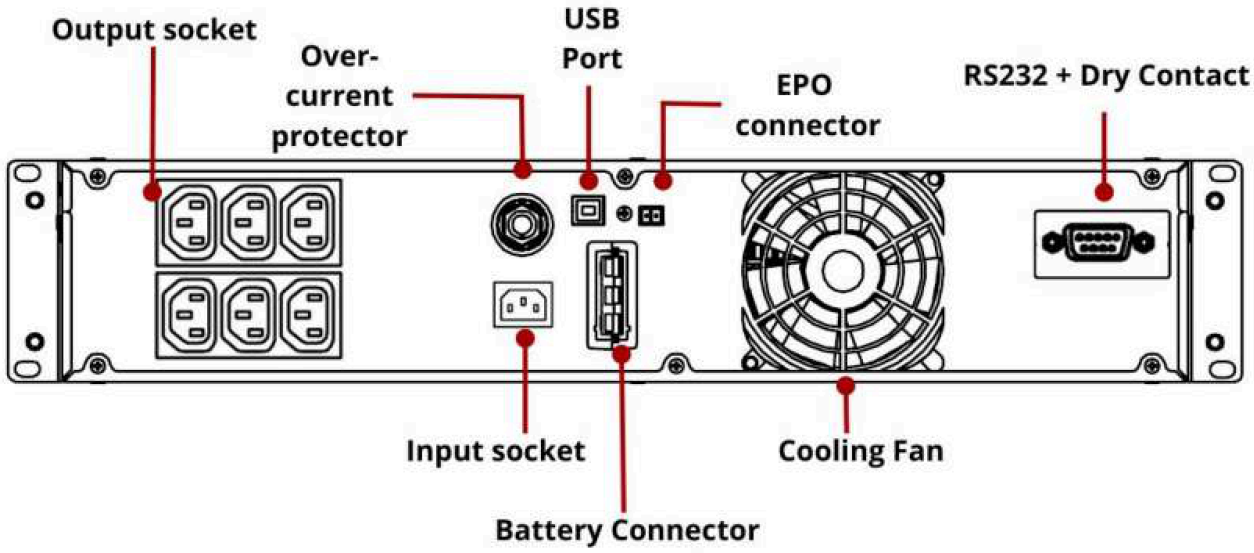

2 KVA

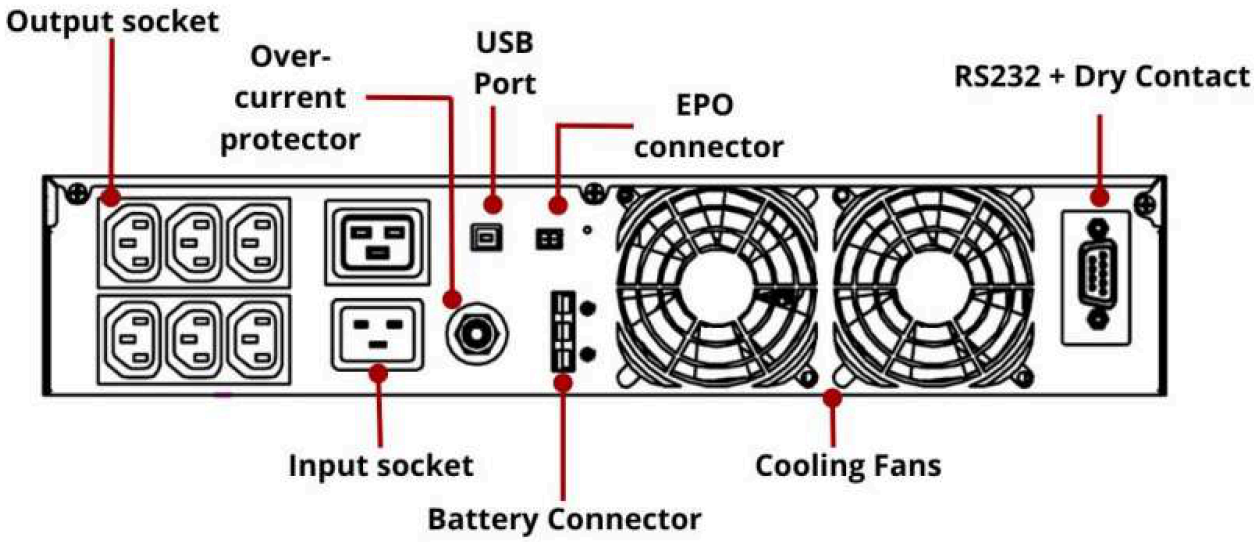

3 KVA

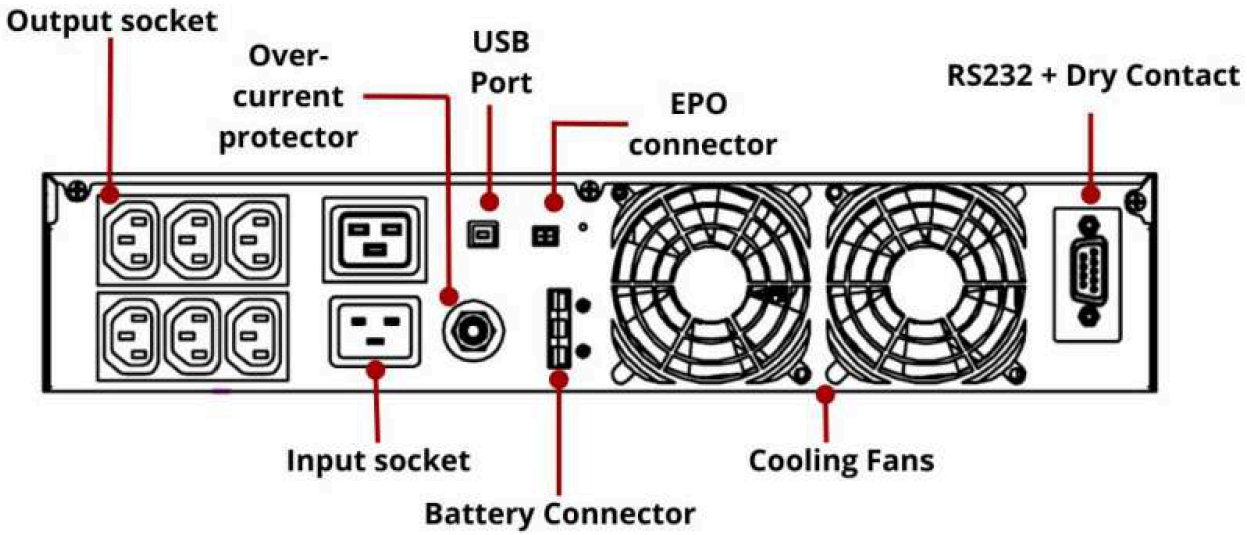

2.2.3 EPO Connector

When the two terminals of the EPO connector are connected together, the UPS switches its output off. To restore the output, disconnect the two terminals, switch the UPS off completely and then restart it.

2.2.4 Intelligent Slot

SNMP CARD

The SNMP card monitors the UPS remotely (input voltage and frequency, output voltage and frequency, load, etc.) and switches it on and off remotely (Figure 2-4).

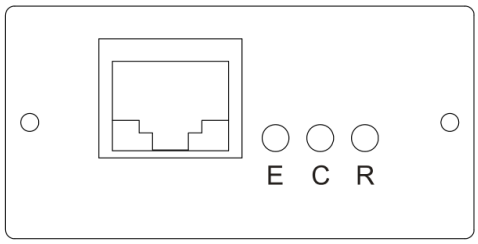

FIGURE 2-4 SNMP card

RS485 AND DRY CONTACT (OPTIONAL)

The pin layout and pin definitions of the RS485 and dry-contact card are shown in Figure 2-5 and Figure 2-6.

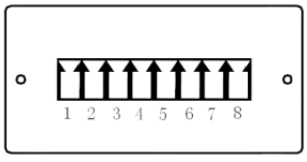

FIGURE 2-5 RS485 and dry contact

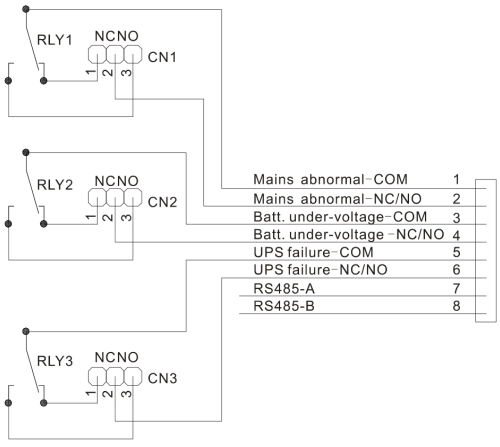

FIGURE 2-6 Pin definition of the RS485 and dry-contact card

Dry-contact details:

1. Jumpers CN1, CN2 and CN3 set each dry-contact output as normally closed (NC) or normally open (NO). The default is NC (pin 1 connected to pin 2). To set an output to NO, connect pin 2 to pin 3.
2. Dry-contact signal requirements: voltage below 60 V DC or 42 V AC RMS, current below 1.25 A.

2.3 Working Principles

When the mains is normal, the PFC stage converts the input into a stable DC voltage of ±360 V (high-voltage models; ±180 V on low-voltage models), from which the DC/AC inverter supplies a stable 208/220/230/240 V AC output (110/120 V on low-voltage models), while the battery is charged. When the mains fails, the DC/DC converter boosts the battery voltage to ±380 V (±190 V on low-voltage models) for the inverter.

The working principle is shown in Figure 2-7. The DC/AC inverter uses a half-bridge topology, and the DC/DC converter a push-pull or boost circuit. PFC is the active power factor correction circuit.

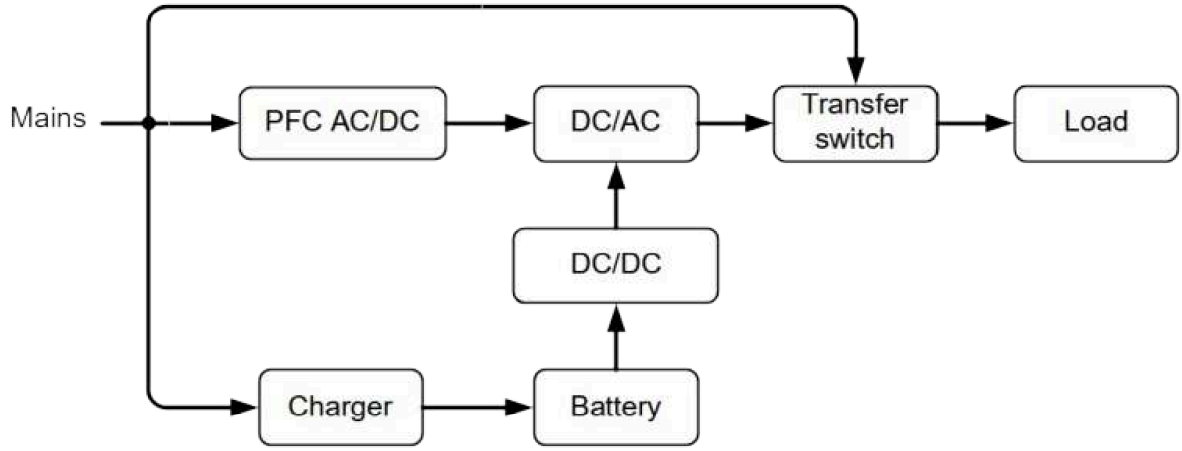

FIGURE 2-7 Working principle of the IST8

2.3.1 Fault Status

UPS faults include EPO protection, bus voltage fault, IGBT over-temperature, fan fault (fan blocked or damaged), output fault (output overload or short circuit), battery fault (battery over-voltage or under-voltage protection) and others. Figure 2-8 to Figure 2-9 show how the LCD (rack display) shows each fault.

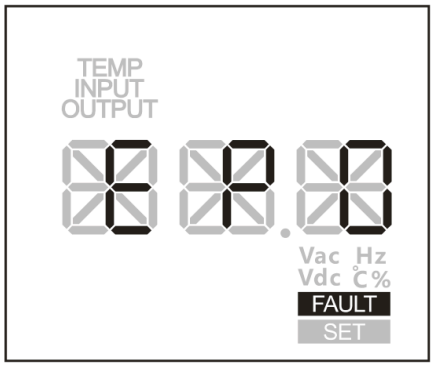

FIGURE 2-8 EPO protection

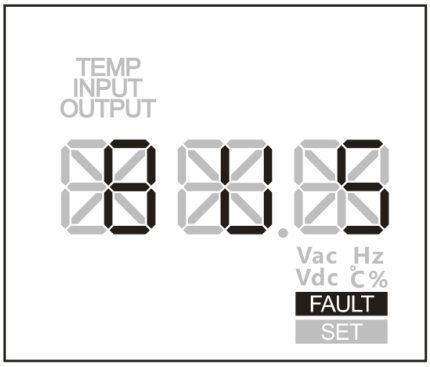

FIGURE 2-9 Bus voltage fault

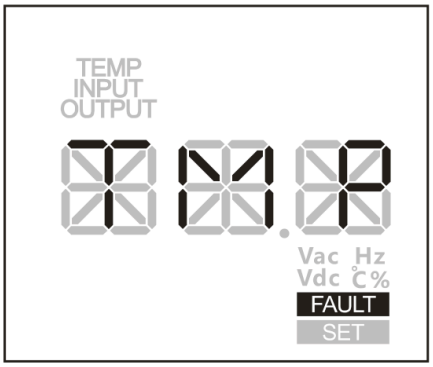

FIGURE 2-10 IGBT over-temperature fault

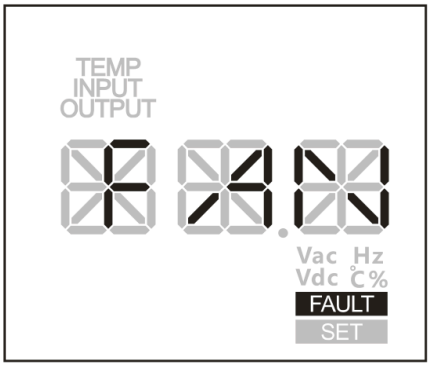

FIGURE 2-11 Fan fault

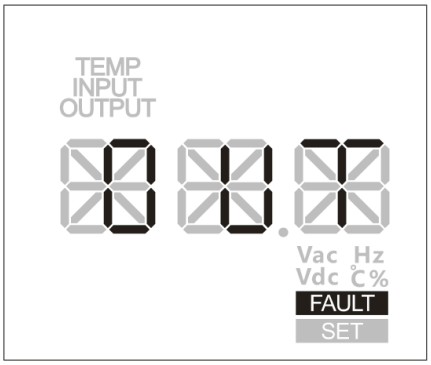

FIGURE 2-12 Output fault

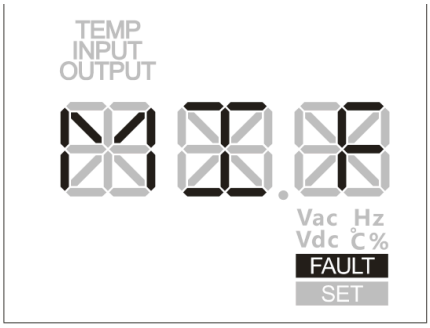

FIGURE 2-13 Repeated inverter fault

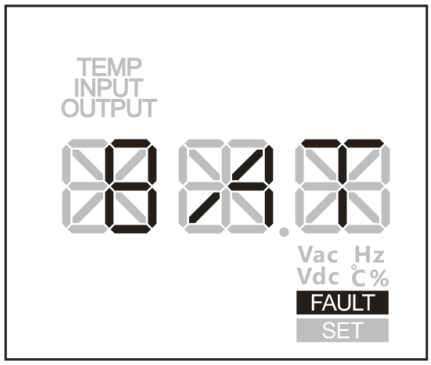

FIGURE 2-14 Battery fault

2.3.2 UPS Parameters Setting

Press and hold **SELECT** for 5 s to enter the set page. Then press **SELECT** to scroll through the settings: ECO/INV mode, TWR/RCK display (TWR: tower; RCK: rack; default RCK) and the inverter output voltage, 208/220/230/240 V (110/120 V on low-voltage models). Press **ON** to confirm a setting.

ECO MODE

"ECO" set page: the three characters "ECO" flash. To confirm the selection, press and hold **ON** for more than 1 s; the setting is saved and the set page closes. If the selection is not confirmed, the set page closes automatically after 20 s. In ECO mode the LCD is as shown in Figure 2-15.

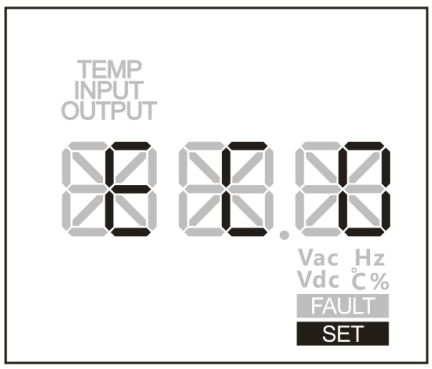

FIGURE 2-15 ECO mode

INV MODE

"INV" set page: the three characters "INV" flash. To confirm the selection, press and hold **ON** for more than 1 s; the setting is saved and the set page closes. If the selection is not confirmed, the set page closes automatically after 20 s. In INV mode the LCD is as shown in Figure 2-16.

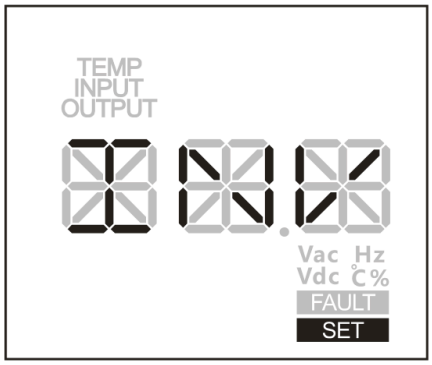

FIGURE 2-16 INV mode

RCK MODE

The default setting is RCK. To change from TWR to RCK: in the set page the three characters "RCK" flash. To confirm the selection, press and hold **ON** for more than 1 s; the setting is saved and the set page closes. In RCK mode the LCD is as shown in Figure 2-17.

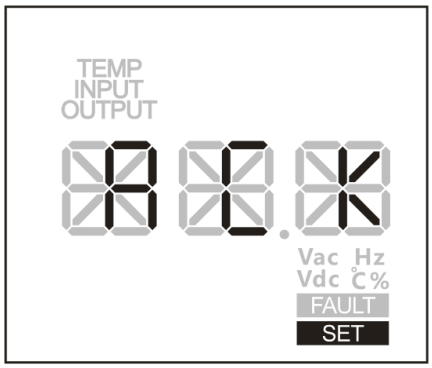

FIGURE 2-17 RCK display

TWR MODE

To change from RCK to TWR: in the set page the three characters “TWR” flash. To confirm the selection, press and hold **ON** for more than 1 s; the setting is saved and the set page closes. In TWR mode the LCD is as shown in Figure 2-18.

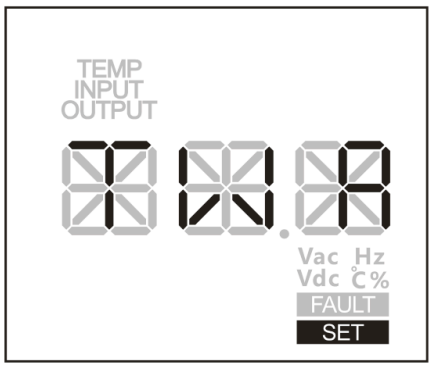

FIGURE 2-18 TWR display

The inverter output voltage, 208/220/230/240 V (110/120 V on low-voltage models), is set in the same way.

03

CHAPTER 3

Installation

This chapter describes the installation: installation notes, preparation, unpacking and checking, installation procedures, electrical connection and installation check.

IN THIS CHAPTER

3.1 Installation Notes
3.2 Installation Preparation
3.3 Unpacking and Inspection
3.4 Installation Procedures
3.5 Electrical Connection
3.6 Electrical Connection Check

ROADMAP **From delivery to operation**

1. **Read the safety instructions** — Section 1.1
2. **Unpack and check the delivery** — Section 3.3
3. **Choose the place and prepare the cables and breakers** — Section 3.2
4. **Install and connect** — Section 3.5
5. **Start** — Section 4.1
6. **Check the display and the settings** — Section 2.3.2
7. **Look after** — Section 5.1

3.1 Installation Notes

The IST8 is compact and can stand directly on a flat surface, with no fixing. Leave at least 300–500 mm free around the UPS and 500 mm above it for operation, maintenance and cooling, and keep the room well ventilated. Battery life is longest at room temperature (20 °C): where possible, install air conditioning. The installation notes are shown in Figure 3-1.

- Place the UPS on a flat floor (not on a sloping or uneven floor).
- Do not put objects on top of or around the UPS: they can block the air vents. Do not sit on the UPS.
- Do not place the UPS in direct sunlight, in the rain or in damp places.
- Do not place the UPS where there is corrosive gas.
- Do not place the UPS near fire or near electrical equipment that can produce sparks, to avoid injury and damage.

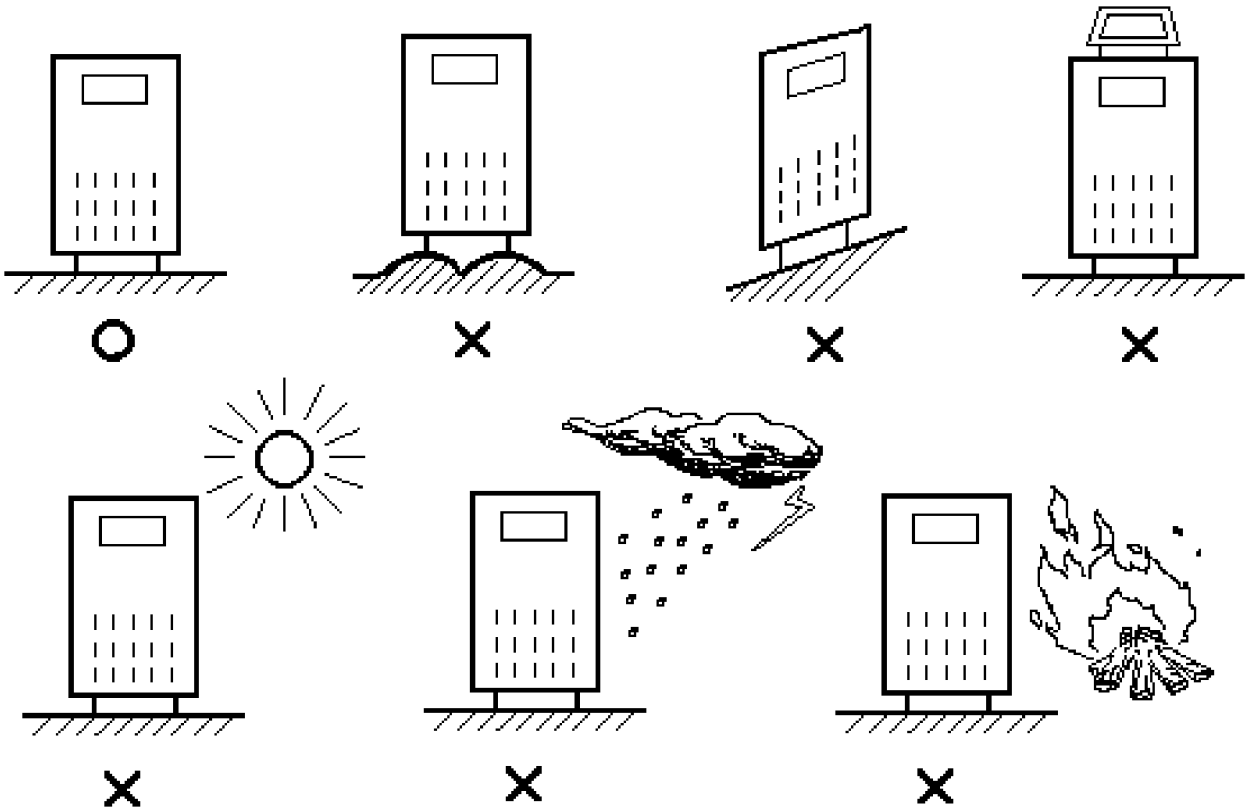

FIGURE 3-1 Installation notes

3.2 Installation Preparation

3.2.1 Installation Place and Environment Requirements

CAUTION

Before installing the UPS, make sure that the installation place and environment meet the basic conditions for safe and normal operation. If they do not, make the necessary changes. Install the UPS only when all the basic conditions are met.

INSTALLATION PLACE REQUIREMENTS

- The installation site must be equipped with fire-fighting equipment.
- The mains supply of the UPS must have the specified circuit breaker or a suitable socket.
- Do not keep flammable or explosive materials in the installation place.
- Prepare the earthing before installing the UPS. The neutral-to-earth voltage of the mains must be less than 5 V.
- Building work at the installation place must be finished and the floor must be hardened. The installation place must be clean and dust-free.

INSTALLATION ENVIRONMENT REQUIREMENTS

Operating temperature: 0–60 °C (best 0–40 °C; long operation at 40–60 °C may reduce the output power);

Relative humidity: 0–95 % RH, non-condensing;

- Cooling: forced air;
- Altitude: derating according to IEC 62040-3;
- Mounting: free from vibration, inclination not more than 5°;

Pollution degree: II.

Install the UPS in a well-ventilated, dust-free place with suitable temperature and humidity. Recommended ambient: 20–25 °C and about 50 % RH.

⚠ CAUTION

Do not install the UPS where there is conductive metal dust. The UPS is suitable only for non-tropical climates.

3.2.2 Input Breaker Selection

Fit a circuit breaker or a distribution box, matched to the power of the UPS, in its input line to isolate it from the mains. Because of the charging power and the inrush current at switch-on, choose a breaker rated 1.5 to 2 times the maximum input current of the UPS, without residual-current (earth-leakage) protection, to avoid nuisance tripping. The distribution box should be built by a qualified panel builder. Recommended input breakers: Table 3-1.

TABLE 3-1 Recommended input breakers

Model	AC input	
	Max. current (A)	Recommended breaker (A)
1kVA	12	20

Model	AC input	
	Max. current (A)	Recommended breaker (A)
2 kVA	24	32
3 kVA	36	50
2 kVA G	12	20
3 kVA G	18	32

3.2.3 Selection of the Cross-sectional Area of Wire

For the cross-sections of the AC input, AC output and battery cables, use the recommended values of Table 3-2, or the next larger size.

TABLE 3-2 Recommended cable cross-sections

Cross-section (mm²)		1	1.5	2.5	4	6	10	16	25
Current rating (A)	Rubber (25 °C)	8	12	20	28	42	70	96	125
	PVC (25 °C)	6	9	15	20	30	50	64	100

NOTE

The cables supplied with the UPS are of good quality and meet the safety requirements (internationally certified and UL-certified). If you supply your own cables, use the cross-sections of Table 3-3, given for a length of about 5 m; longer cables need larger cross-sections.

3.3 Unpacking and Inspection

Unpack the UPS and check the following:

- Inspect the UPS for shipping damage. If any is found, report it to the carrier immediately.
- Check against the delivery list that all accessories are present and correct. If there is any discrepancy, contact your AEC dealer immediately.

3.4 Installation Procedures

3.4.1 UPS Installation

> **NOTE**
> The installation is the same for all IST8 models; the 1 kVA model is shown as an example.

RACK INSTALLATION

PROCEDURE

1. Fit the two rack-mounting brackets to the UPS with four M4×8 screws.

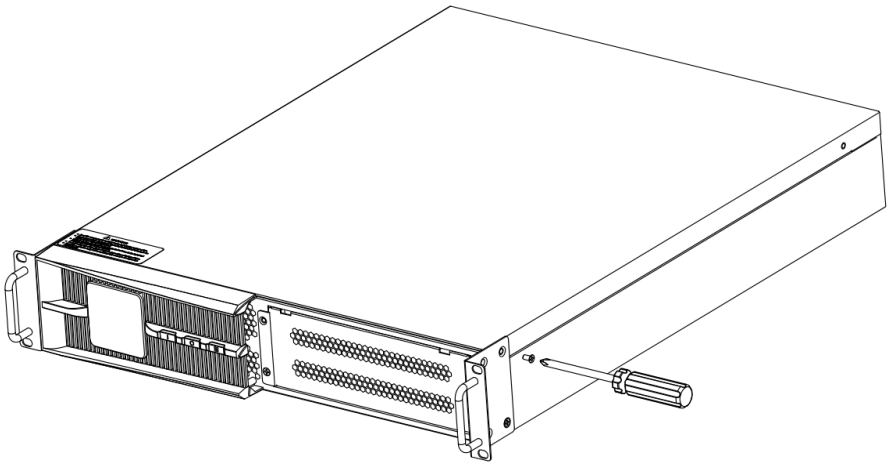

2. Push the UPS into the rack.

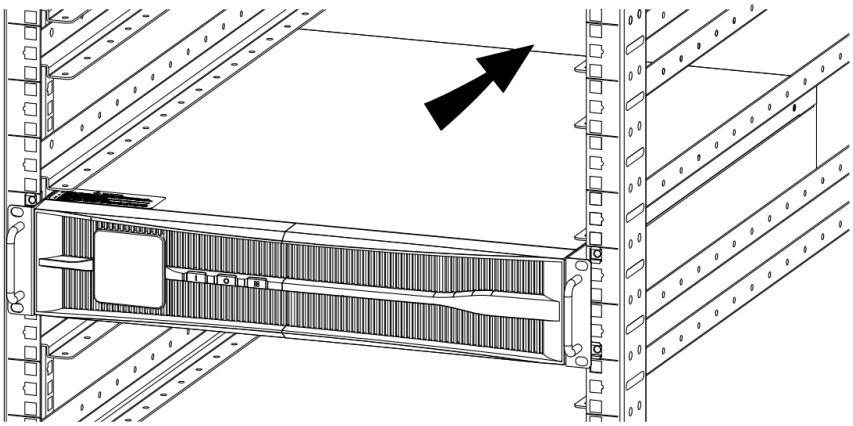

3. Fix the UPS to the rack with screws.

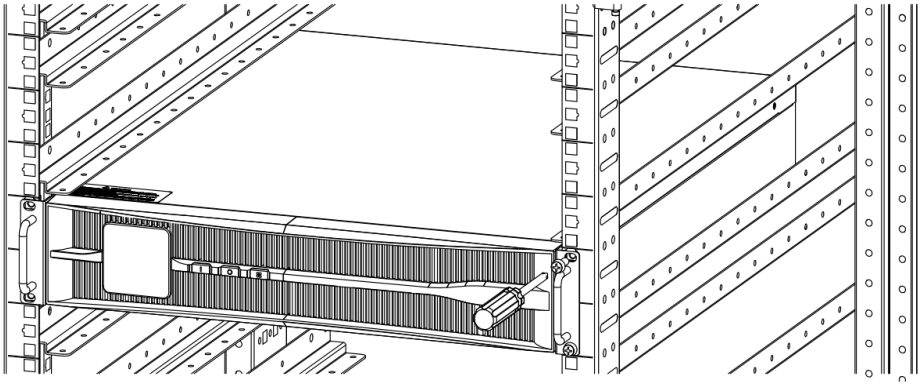

TOWER INSTALLATION

PROCEDURE

1. Stand the UPS upright, with the battery side at the top.

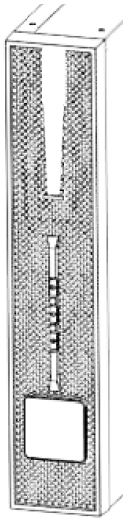

2. Join the two stand halves together.

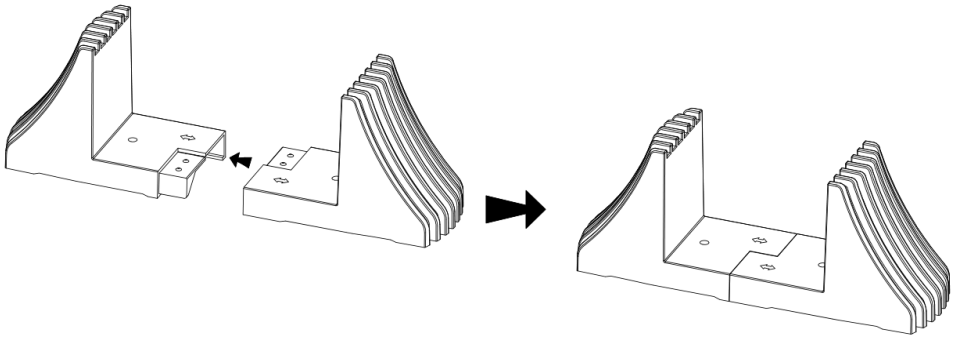

3. Fix the two stands to the UPS with two M4×10 screws.

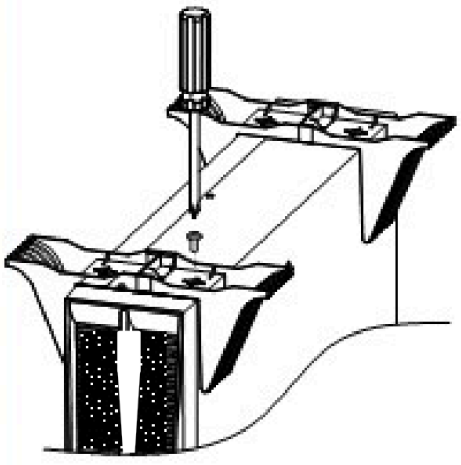

4. Stand the UPS on its stands as shown below and set the display to tower (TWR, Section 2.3.2).

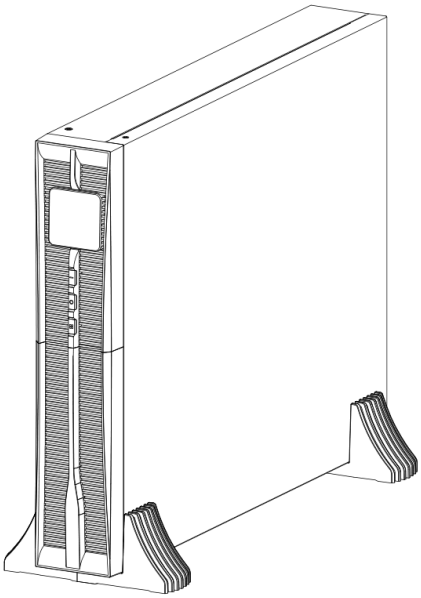

3.4.2 Intelligent Slot Replacement

> **NOTE**
> The intelligent slot card is replaced in the same way on all IST8 models; the 1 kVA model is shown as an example.

PROCEDURE

1. Remove the standard intelligent slot card.

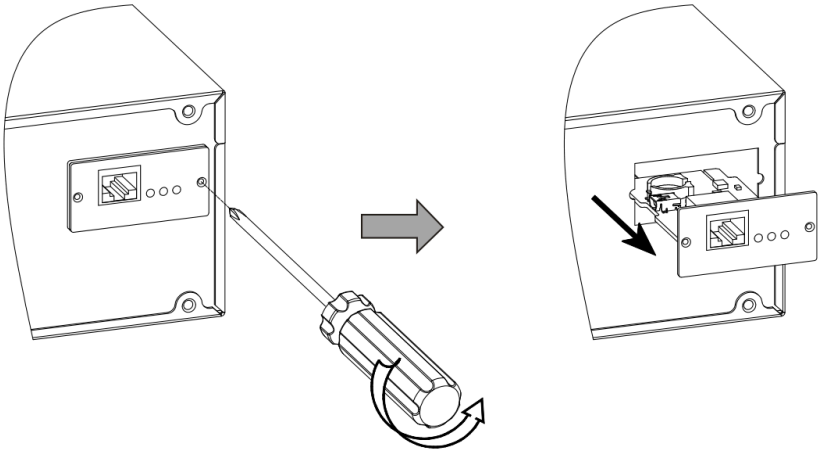

FIGURE 3-2 Removing the standard slot card

2. Install the optional intelligent slot card and fix it.

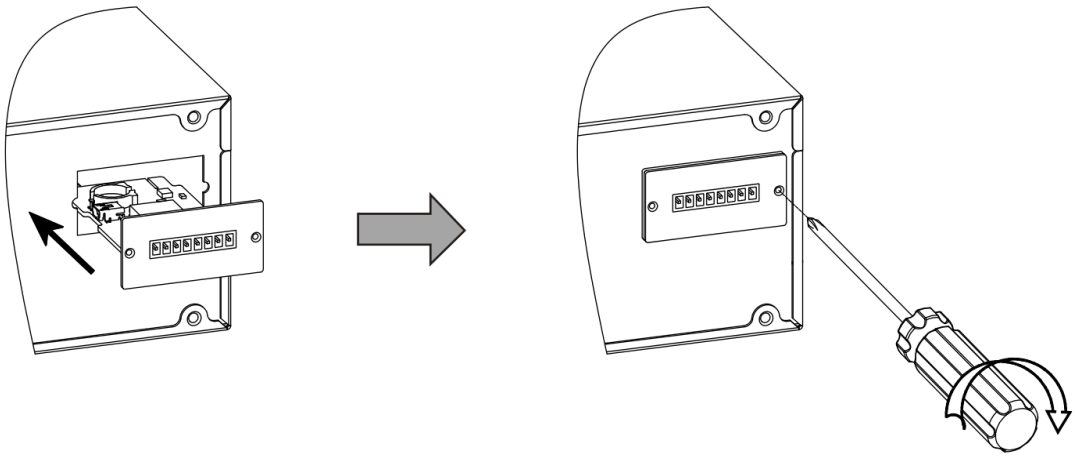

FIGURE 3-3 Fitting the optional slot card

3 Connect the communication cable.

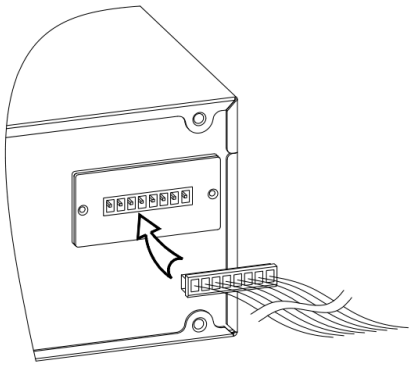

FIGURE 3-4 Connecting the communication cable

3.5 Electrical Connection

3.5.1 Battery Connection

> **NOTE**
> The battery is connected in the same way on all IST8 models; the 1 kVA model is shown as an example.

The battery connector is delivered disconnected, to prevent accidental operation during transport. After installing the UPS, take the battery connector out of the packaging and insert it into the battery port on the rear panel (Figure 3-5).

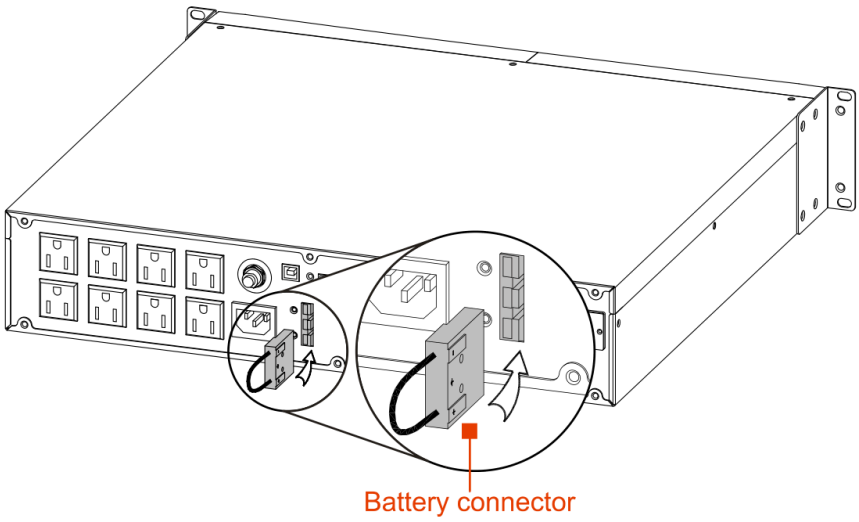

FIGURE 3-5 Battery connection

3.5.2 Input and Output Connection

The AC input and the outputs of the IST8 are sockets. Connect the input socket to the mains socket with the power cable, and plug the loads into the output sockets.

⚠ CAUTION

The mains socket must be near the UPS and easy to reach.

1KVA

The input and output wiring of the 1 kVA UPS is shown in Figure 3-6.

⚠ CAUTION

The current of each output socket must not exceed 15 A, and the total output current must not exceed 9 A.

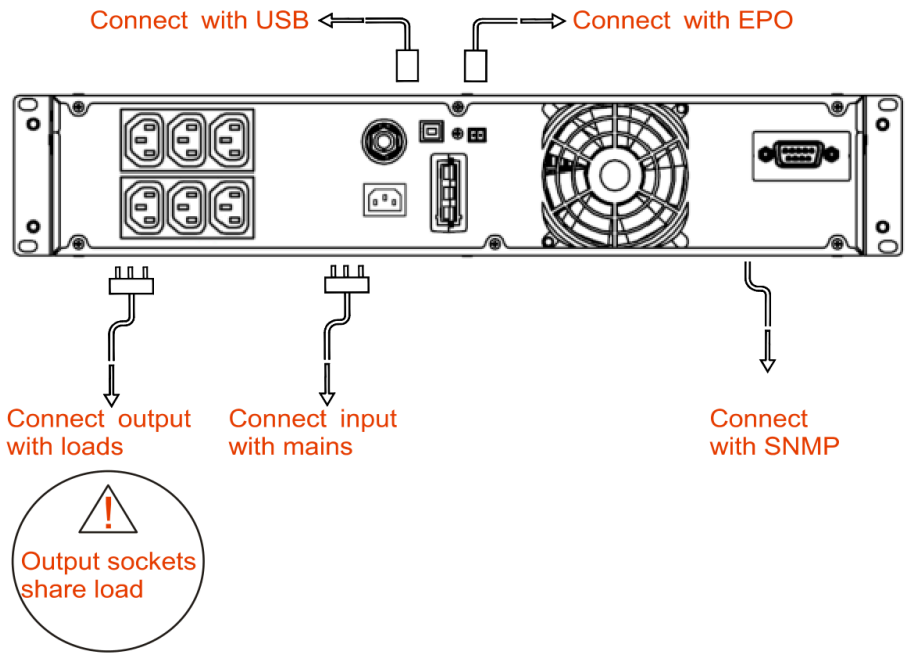

FIGURE 3-6 Wiring of the 1 kVA model

2 KVA

The input and output wiring of the 2 kVA UPS is shown in Figure 3-7.

CAUTION

The current of each output socket must not exceed 20 A, and the total output current must not exceed 18 A.

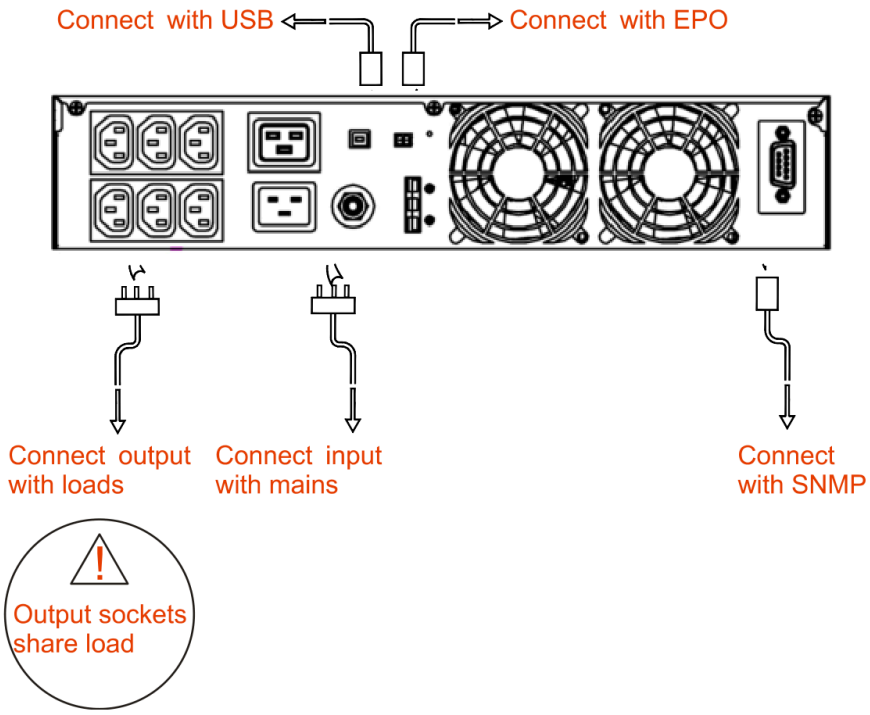

FIGURE 3-7 Wiring of the 2 kVA model

3 KVA

The input and output wiring of the 3 kVA UPS is shown in Figure 3-8.

CAUTION

The current of each output socket must not exceed 20 A, and the total output current must not exceed 27 A.

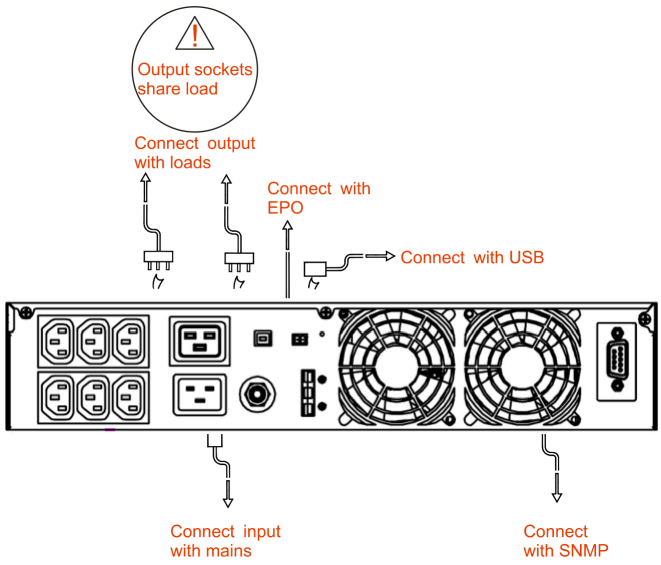

FIGURE 3-8 Wiring of the 3 kVA model

3.6 Electrical Connection Check

After the electrical connection, check it according to Table 3-3.

TABLE 3-3 Electrical connection check

No.	Check	Result
1	The cables are connected firmly.	Yes ☐ No ☐
2	The neutral-to-earth voltage is less than 5 V AC.	Yes ☐ No ☐
3	The wiring is tidy and the cables are bound as required by the installation rules.	Yes ☐ No ☐
4	The installation and the wiring leave room for later changes, extension and maintenance of the system.	Yes ☐ No ☐

CHAPTER 4

04 Operation Guide

This chapter describes the checks before startup, and the startup and shutdown procedures.

IN THIS CHAPTER

4.1 Checking Before Startup
4.2 Start-up
4.3 Shutdown

4.1 Checking Before Startup

Before using the UPS, check the following to make sure that it works normally.

The input and output are installed correctly.

The input is connected to a supply matching the rated input.

There is no short circuit on the output, and the load does not exceed the UPS capacity.

The computers and other loads are switched off.

The battery voltage is normal.

Inductive loads should not be connected to the output; supply them directly from the mains.

4.2 Start-up

PROCEDURE

1. Connect the UPS to the mains socket.
2. Press **ON** on the panel for 1 s to start the UPS.
3. After about 10 s, when the UPS is running steadily, switch on the loads (PCs, etc.).

⚠ CAUTION

Switch on the loads in order from the highest power to the lowest ("high power device→small power device"), to avoid tripping the overload protection when a high-power device starts.

4.3 Shutdown

PROCEDURE

1. Switch off the loads and leave the UPS running without load for about 10 minutes to cool down.
2. Press **OFF** on the panel for 1 s to shut down the UPS.
3. Unplug the UPS from the mains socket.

CHAPTER 5

05 Maintenance and Troubleshooting

This chapter covers maintenance, daily battery maintenance, battery replacement and troubleshooting.

IN THIS CHAPTER

5.1 Maintenance Guide
5.2 Daily Battery Maintenance
5.3 Battery Replacement Safety
5.4 Troubleshooting

5.1 Maintenance Guide

Proper maintenance keeps the device in the best condition and extends its service life.

5.1.1 Safety Precautions

To ensure personal safety and protect the device, observe the following precautions.

- Remember that a dangerous voltage may be present inside the UPS even when it is not operating. Before maintenance, check the voltage with a multimeter and make sure that the UPS is completely shut down and safe.
- The operator must be familiar with the UPS and this manual.
- Before working on the UPS, remove conductive objects such as rings and watches.
- Observe the safety regulations strictly. If in doubt, consult qualified personnel.
- Before maintenance, use a voltmeter to check that the power is off and the UPS is safe.

5.1.2 Preventive Maintenance

To keep the UPS efficient and reliable, carry out the following maintenance tasks regularly.

- Keep the operating environment free of dust and chemical pollutants.
- Check that the fans work properly and the air vents are not blocked. Replace any fan that has stopped working without delay.
- Check that the battery voltage is normal.
- Check that the UPS works normally.

5.2 Daily Battery Maintenance

- Battery charging:
  - Before first use, start the UPS and charge the battery for ten hours. The UPS can be used during charging, but if the mains fails in this period the backup time may be shorter than normal.
  - Normally, discharge and recharge the battery every four to six months: discharge it until the UPS switches off, then recharge it for at least ten hours.
  - In hot climates, discharge and recharge the battery every two months, recharging for at least ten hours each time.
  - If the battery is not used for a long time, discharge and recharge it every three months, recharging for at least ten hours each time.
- Clean the battery cases with a damp cloth. Do not use oil or solvents such as petrol or thinners.
- To avoid explosion, keep batteries away from sources of fire and devices that can produce sparks.

- Check the charger regularly, so that the battery is neither overcharged nor left partly charged. Avoid deep discharges. After a discharge, recharge the battery fully (within 24 h). Do not discharge a battery that has not been fully recharged: this reduces its capacity and can damage it.
- Press **OFF** button to shut down the UPS, so that the battery does not discharge for a long time after a mains failure. If the UPS is out of use for a long time, discharge and recharge the battery periodically to avoid damage from self-discharge.

5.3 Battery Replacement Safety

Do not put batteries into fire: risk of explosion.

Do not open or dismantle batteries: the electrolyte is harmful to skin and eyes.

Dispose of used batteries through an authorized collection point in accordance with local regulations.

Battery replacement should be carried out by qualified personnel.

A new battery must be of the same capacity, model and manufacturer as the one replaced.

- Before touching the battery, check that there is no dangerous voltage between the battery terminals and earth. Never touch the two battery connectors or bare wiring terminals at the same time.

5.4 Troubleshooting

If the UPS does not work normally after start-up, look for the possible cause in Table 5-1. Check also whether the fault is caused by the environment (temperature or humidity out of range) or by an overload. If the problem remains, contact AEC service or your AEC dealer.

TABLE 5-1 Troubleshooting

No.	Symptom	Possible causes
1	The mains is normal and the UPS starts and supplies its output voltage, but it runs in battery mode and the buzzer beeps intermittently.	Poor contact in the supply circuit or in the socket: the input power does not reach the UPS properly.
2	 The UPS starts and supplies its output voltage, but runs on bypass (bypass icon permanently on).	(1) The load exceeds the rated output of the UPS: reduce the load or choose a UPS with a larger output. (2) A load inrush at start-up can transfer the UPS to bypass temporarily; it recovers automatically. This is normal.
3	After startup the output is normal, but the UPS stops its output as soon as the load is switched on.	(1) Severe overload or output short circuit: reduce the load or find the cause of the short circuit. Common causes are a short-circuited power strip on the output or a damaged load with a short-circuited input. (2) The loads were not started in the order “largest load first, smallest last”: restart the UPS and, when it runs steadily, start the loads again in that order.

If the UPS has a fault, press **SELECT** to see the fault message on the LCD and find the cause quickly.

The fault symbols and buzzer signals are explained in Table 5-2.

No.	Symptom	Possible causes
4	After startup the UPS works normally, but after a while it shuts down automatically.	In battery mode it is normal for the UPS to switch off automatically when the battery is exhausted (battery low-voltage protection). When mains power returns, the UPS restarts automatically and charges the battery.
5	Continuous beep, the fault icon is on: inverter failure, and the UPS transfers to bypass mode.	(1) Overload or output short circuit: the UPS switches off automatically. (2) Driver or power transistor failure. (3) Main control board failure. (4) UPS over-temperature protection
6	After startup the UPS works normally, but when the mains fails there is no output.	(1) Battery failure. (2) Charger failure: the battery is not being charged. (3) The battery is not connected to the UPS or is badly damaged.
7	The input is normal, but the buzzer beeps intermittently.	The mains voltage or frequency is outside the UPS input range.
8	The LCD is blank.	Loose wiring to the display board, or display board fault.

TABLE 5-2 Fault symbols and buzzer signals

Fault symbol	Buzzer	Meaning
EPO	Continuous beep	Emergency power off (EPO) activated (if the EPO function is fitted): bypass output and inverter output are switched off.
BUS	Continuous beep	DC bus voltage fault; the inverter output is off.
TMP	Continuous beep	Over-temperature protection; the inverter output is off. Check whether the cooling fan is damaged or the air vents are blocked.
OUT	Continuous beep	Output fault: check whether the output is short-circuited or the load is too large.
MIF	Continuous beep	Check whether the UPS is on and in bypass mode. If so, the inverter has failed more than five times in five minutes: check whether an inductive load is connected to the output or the load is too large.
BAT	Continuous beep	Battery fault: battery voltage too low or too high (protection).
FAN	Rapid beep (Alarm once about every 0.2s)	Fan fault alarm; the inverter output will shut down for protection. Check whether the cooling fan is damaged.
All load energy bars flash	Rapid beep (Alarm once about every 0.2s)	Output overload alarm: the output will switch off shortly. Reduce the load.
Battery energy bars all flash	Slow beep (once about every 2.0 s)	Battery voltage too high: check the battery and the charger.
All battery energy bars off and the frame flashes	Rapid beep (Alarm once about every 0.2s)	The battery is about to run out: protect your equipment and save the data on your computer.

CHAPTER 6

06 Package, Transportation, Storage

This chapter describes packaging, transportation and storage.

IN THIS CHAPTER

6.1 Package
6.2 Transportation
6.3 Storage

6.1 Package

The product is packed in a carton. When packing, observe the orientation requirements. One side of the carton carries the warning symbols (keep dry, handle with care, this way up, stacking limit, etc.); the other side carries the model label, etc.

6.2 Transportation

Handle the UPS with care during transport and avoid severe shocks. Keep it in the position shown on the carton, to avoid damage.

6.3 Storage

Store the UPS in a dry warehouse, out of the sun and the rain, in the position shown on the carton. Storage temperature: −25 … +55 °C without battery; with the battery, 0–40 °C at 20–80 % relative humidity. The warehouse must be free of toxic gases, flammable or explosive materials and corrosive chemicals, and of strong vibration, shocks and magnetic fields. Under these conditions the storage period is six months; for longer storage, recharge the battery every three months.

APPENDIX A

A Technical Specifications

Item	IST8-1	IST8-2	IST8-3
Rating: Power (VA / W)	1000 / 1000	2000 / 2000	3000 / 3000
Input: Voltage range	120–295 V AC		
Input: Frequency	50 / 60 Hz ± 10%, auto-sensing		
Input: Power factor · THDi	≥ 0.99 · < 5%		
Input: Input socket	IEC C14	IEC C20	IEC C20
Output: Voltage	208 / 220 / 230 / 240 V ± 1%, settable from the panel		
Output: Frequency (battery mode)	50 / 60 Hz ± 0.1 Hz		
Output: Power factor · voltage distortion	1 · THDv < 3%		
Output: Transfer time	0 ms		
Output: AC/AC efficiency	91.5%	91.5%	93%
Output: Overload	101–115% 1 min · 116–133% 1 s · > 134% 200 ms		
Output: Output sockets	6 × IEC C13	6 × IEC C13 + 1 × IEC C19	6 × IEC C13 + 1 × IEC C19
Battery: Type	lithium iron phosphate (LFP), built in		
Battery: Backup time · max. charging current	11 min · 4 A		
General: Operating modes	online (INV) · ECO, set from the panel		
General: Display	LCD, rack (RCK) or tower (TWR) reading		
General: Communication	USB · intelligent slot (DB9, RS232 + dry contact as shown; optional SNMP card or RS485 + dry-contact card) · EPO		
General: Protections	output over-voltage, battery under-voltage, input over-voltage, overload, short circuit, over-temperature		
General: Noise	< 55 dB		
General: Environment	0–60 °C (best 0–40 °C; long periods at 40–60 °C may reduce the output power) · 0–95% RH non-condensing		
General: Dimensions W × D × H (mm)	438 × 423 × 86 (2U)	438 × 570 × 87 (2U)	438 × 570 × 87 (2U)
General: Weight (kg)	8.9	13.6	16.1

Data of the 230 V models, from the AEC UPS Catalogue EMEA 2026. Specifications are subject to change without prior notice.

Dimensions and weights

Overall dimensions in millimetres (W × D × H) and net weights, from the technical data of this manual. Leave the clearances given in the installation chapter around the UPS.

IST8-1
rack 2U / tower



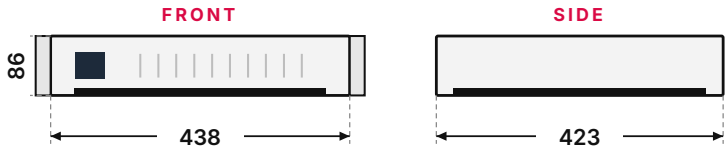

W × D × H	438 × 423 × 86 mm
IST8-1	8.9 kg

IST8-2 · IST8-3
rack 2U / tower



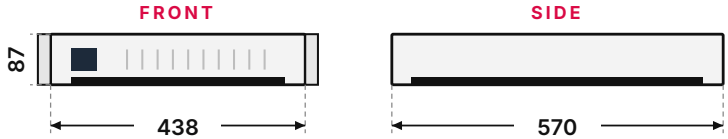

W × D × H	438 × 570 × 87 mm
IST8-2	13.6 kg
IST8-3	16.1 kg

More on the AEC partner portal

PARTNER PORTAL

portal.emea.aecups.com

- 3D models of every UPS
- Diagrams and drawings
- Video tutorials
- Manuals and catalogues, always up to date

WHATSAPP SUPPORT

+39 393 080 5211

Technical support 24/7. Scan the code to write to AEC service.

AEC International Srl
Via Nerviano 55 · 20045 Lainate (MI) · Italy

Sales +39 02 9415 8991 · info@aecups.com
Service +39 393 080 5211 · service@aecups.com