AEC
Technology Behind Power

USER MANUAL

IST9

10–40 kVA

Online double-conversion UPS, three-phase, rack / tower

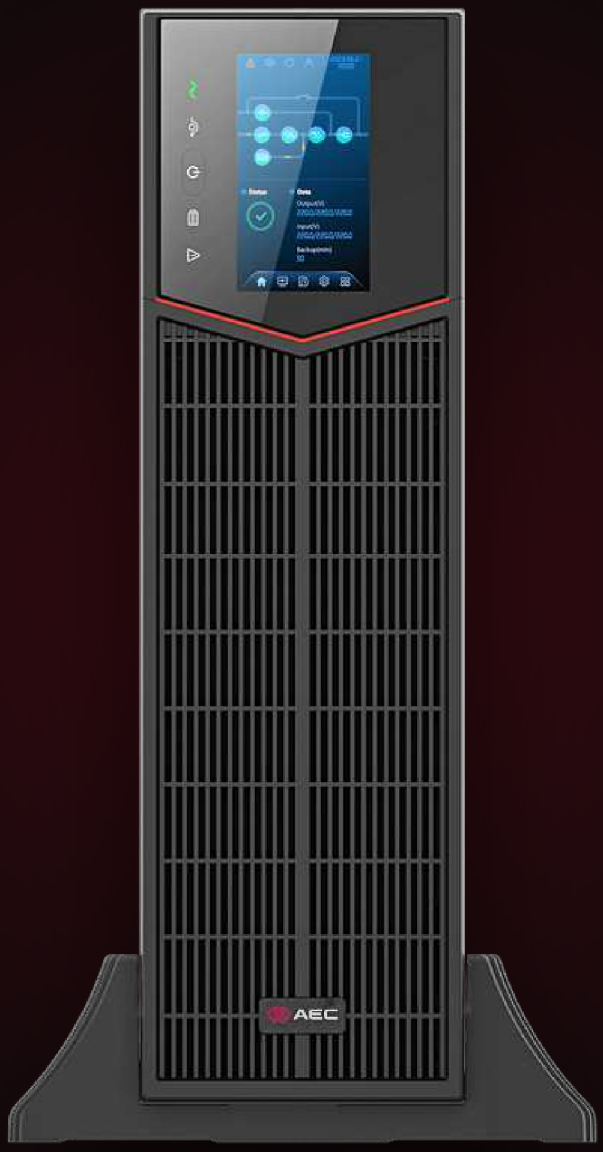

English

Read this manual before installing and using the UPS.
Keep it for future reference.

AEC-UM-IST9-10-40-EN
Rev. 01 · 11/2026

OVERVIEW

Contents

	About this manual	**3**
1	**Safety Description**	**4**
1.1	Safety Notices	4
1.2	Operation and Maintenance Requirements	5
1.3	Environment Requirements	6
2	**Overview**	**7**
2.1	Product Introduction	7
2.2	Operating Principle	14
2.3	Optional Accessories	18
3	**Installation**	**22**
3.1	Unpacking and Inspection	22
3.2	Installation Preparation	22
3.3	Mechanical Installation	25
3.4	Electrical Connection	29
4	**Touch Screen Operation**	**45**
4.1	Menu Structure	45
4.2	First Switch-on	46
4.3	Home Page	48
4.4	Operating Status Display	49
4.5	Real-time Monitor	51
4.6	History	52
4.7	Project Management	52
4.8	More	58
5	**Daily Operation**	**59**
5.1	Pre-start Checks	59
5.2	Start-up	59
5.3	Shutdown	59
5.4	Parallel System	60
6	**Maintenance and Troubleshooting**	**62**
6.1	Periodic Preventive Maintenance	62
6.2	Battery Maintenance	62
6.3	Fan Maintenance	62
6.4	Air Filter	65
6.5	Troubleshooting	68
7	**Package, Transportation and Storage**	**71**
7.1	Package	71
7.2	Transportation	71
7.3	Storage	71
A	**Technical Specifications**	**72**
	Dimensions and weights	74
B	**Acronyms and Abbreviations**	**75**

BEFORE YOU START

About this manual

This manual describes the AEC IST9 10–40 kVA UPS: online double-conversion UPS, three-phase, rack / tower. It covers the features, controls, installation, operation, maintenance, transport and storage. Read it before you start, and keep it with the UPS for future reference.



10 – 20 kVA, tower



30 – 40 kVA, tower



Rack, with the distribution module

kVA = kW
output power factor 1

96 %
efficiency online, up to (99 % ECO)

≧ 0.99
input power factor

3U
rack or tower, one height for every model

MODELS COVERED

- IST9 10 kVA and 20 kVA (AEC codes IST9-10, IST9-20), 3U, rack or tower
- IST9 30 kVA and 40 kVA (AEC codes IST9-30, IST9-40), 3U, rack or tower
- Optional: distribution module with maintenance bypass, battery boxes (BBJ2), parallel kit

WHO THIS MANUAL IS FOR

Installers, electricians, IT and facility staff who install, operate and maintain the UPS. Electrical installation and any work inside the UPS must be done by qualified personnel, in line with IEC 60364 and the local wiring rules.

Safety messages

Safety messages in this manual follow ISO 3864 / ANSI Z535. The signal word tells how serious the hazard is.

DANGER	A hazardous situation which, if not avoided, **will** result in death or serious injury.
WARNING	A hazardous situation which, if not avoided, **could** result in death or serious injury.
CAUTION	A hazardous situation which, if not avoided, could result in minor or moderate injury, or in damage to the equipment.
NOTE	Additional information that stresses or completes the text.
TIP	A hint that helps you solve a problem or save time.

Numbers in red circles on a picture are explained in the table or list that follows it. References in red, such as Figure 2-1 or Table 3-1, are links in the PDF. Figures are for reference only: the actual product may differ in detail.

Up and running

The short version: each step points to the full instructions. Read the safety chapter first.

1. **Read the safety instructions.** See Section 1.1, Safety Notices.
2. **Unpack and check the delivery.** See Section 3.1, Unpacking and Inspection.
3. **Choose the place and prepare the cables and breakers.** See Section 3.2, Installation Preparation.
4. **Install and connect the UPS.** See Section 3.4, Electrical Connection.
5. **Start the UPS.** See Section 5.2, Start-up.
6. **Check the display and the settings.** See Section 4.4, Operating Status Display.
7. **Look after the UPS.** See Section 6.1, Periodic Preventive Maintenance.

CHAPTER 1

01 Safety Description

This chapter describes the safety notices. Before performing any work on the UPS, read this user manual carefully to avoid personal injury and damage to the device caused by improper operation.

IN THIS CHAPTER

1.1 Safety Notices
1.2 Operation and Maintenance Requirements
1.3 Environment Requirements

AT A GLANCE **The safety rules of this chapter**



High voltage inside, also after the UPS is switched off: wait before opening it.



Installation, opening and service by qualified personnel only.



Batteries: never short-circuit them, keep them from fire, use only the specified type.



Electrostatic-sensitive boards: wear an earthed wrist strap.



Earth the UPS before connecting anything else.



No liquids or foreign objects inside the UPS.



In case of fire use a dry-powder extinguisher, never water or liquid.



Keep the air inlets and outlets free; respect the clearances.

1.1 Safety Notices

This section describes the safety notices that must be observed during installation, use, maintenance and all related operations.

CAUTION

Before operating the UPS, read the safety notices and operating instructions in this section carefully to avoid accidents.

The DANGER, WARNING and CAUTION notices in this manual do not cover all the safety rules that must be observed; they only supplement the general safety rules for operation.

NOTE

AEC accepts no liability for consequences of violating general safety requirements or the safety standards for design, manufacture and use.

1.1.1 Safety Instructions

⚠ CAUTION

High temperatures and high voltages are present inside the UPS. During use, strictly comply with all warnings and operating instructions on the UPS and in this user manual.

⚠ CAUTION

This UPS is an EMC category C3 product (IEC 62040-2), intended for commercial and industrial use. In a residential environment it may cause radio interference; in that case the user may have to take additional measures.

- Do not let liquids or foreign objects enter the UPS.
- The UPS must be connected to a protective earth (PE).
- In case of fire, use a dry-powder extinguisher. Do not use liquid extinguishers: risk of electric shock.

1.1.2 Battery Safety Notices

⚠ CAUTION

Use only the specified batteries. Other batteries can damage the UPS.

- Batteries may be replaced only by authorised service personnel. Do not wear conductive objects such as watches, bracelets or rings while working. Wear rubber shoes and gloves and use tools with insulated handles.
- Do not place tools or other conductive objects on the batteries.
- Never short-circuit the battery terminals or connect them with reversed polarity: risk of fire and electric shock.
- Disconnect the charger before connecting or disconnecting the battery terminals.
- All batteries must be of the same type, model and brand.
- Keep the batteries away from open flames and from electrical equipment that may produce sparks, to avoid personal injury.
- Do not open or damage the batteries: the electrolyte contains strong acid, harmful to skin and eyes. In case of contact, rinse immediately with plenty of water and seek medical attention.
- Dispose of used batteries in accordance with local regulations.

1.1.3 Anti-Static Protection

⚠ CAUTION

Static electricity from the human body can damage electrostatic-sensitive components on the PCBs. Before touching such components, wear an anti-static wrist strap and connect its other end to earth.

1.2 Operation and Maintenance Requirements

⚠ CAUTION

Only authorised service personnel may open the UPS. Opening it otherwise can cause electric shock, and any resulting fault is not covered by the warranty.

- Before moving, rewiring or servicing the UPS, disconnect all electrical connections (AC mains, battery, etc.) to isolate every power input. Do not work on the UPS until it has been completely de-energised for at least 10 minutes: otherwise voltage may still be present at the output, with risk of electric shock.

- When removing a fan, do not put fingers or tools into the rotating fan, to avoid equipment damage or personal injury.

1.3 Environment Requirements

DANGER

Do not install the UPS where flammable or explosive gases or smoke are present, and do not operate it in such an environment.

- Do not use the UPS in direct sunlight, in the rain or in damp places.
- The operating temperature of the UPS is -5 °C to 40 °C, relative humidity 0 % to 95 %, non-condensing (recommended: 20 °C to 25 °C, about 50 % relative humidity).
- Place the UPS on a flat floor free of vibration, with an inclination of less than 5°. Keep the UPS well ventilated: leave at least 300 mm to 500 mm between the rear or sides of the UPS and adjacent equipment or walls. Poor ventilation raises the internal temperature, which shortens the life of the internal components and of the UPS.
- The UPS is rated for operation up to 2000 m above sea level. Above 2000 m, derate the output power according to IEC 62040-3.

02

CHAPTER 2

Overview

This chapter describes the UPS features, appearance, communication options, accessories, operating principle and optional accessories.

IN THIS CHAPTER

2.1 Product Introduction
2.2 Operating Principle
2.3 Optional Accessories

THE UPS AT A GLANCE



Rack: UPS and distribution module, 3U each



Rear: terminals, EPO, communication



Tower: the touch screen turns upright

2.1 Product Introduction

The IST9 is a high-efficiency, online double-conversion UPS with smart control. It provides continuous, high-quality power for file servers, enterprise and central servers, PCs, network concentrators, telecom systems, data centres and other equipment that needs protected power, in sectors such as postal services, finance, networks, stock exchanges and railways.

2.1.1 Features

FULLY DIGITAL SMART CONTROL

The 10 kVA and 20 kVA models support three-phase in / three-phase out (33), three-phase in / single-phase out (31) and single-phase in / single-phase out (11).

The 30 kVA and 40 kVA models support three-phase in / three-phase out (33) and three-phase in / single-phase out (31).

The UPS detects the grid frequency (50 Hz/60 Hz) and adapts to it automatically. The output voltage can be set to 110 V, 115 V, 120 V, 127 V, 220 V, 230 V or 240 V, to suit different grids.

ENERGY SAVING AND HIGH EFFICIENCY

Three-level inverter and PFC control technology give a clean output voltage waveform, an overall efficiency of up to 96 % and an input power factor above 0.99, making better use of the energy and reducing the load on the grid.

SMART FAN SPEED CONTROL

The fan speed is adjusted automatically to the load, which extends fan life and reduces noise.

ECO ENERGY-SAVING MODE

In ECO mode, when the grid is good, the load is supplied through the bypass with an efficiency of up to 99 %. When the bypass voltage or frequency leaves the normal range, the UPS transfers to inverter output, keeping the supply reliable while saving energy.

WIDE INPUT VOLTAGE RANGE

With its fast independent detection, at light load the UPS keeps running from the mains down to a phase voltage of 80 V (the lower mains limit) without discharging the battery. In mains mode all the output power comes from the grid, so the battery stays fully charged and is discharged less often, which extends its life.

TOWER OR RACK INSTALLATION

The UPS can be installed as a tower or in a rack, depending on the space available; the touch screen turns automatically to portrait or landscape to match.

2.1.2 Appearance

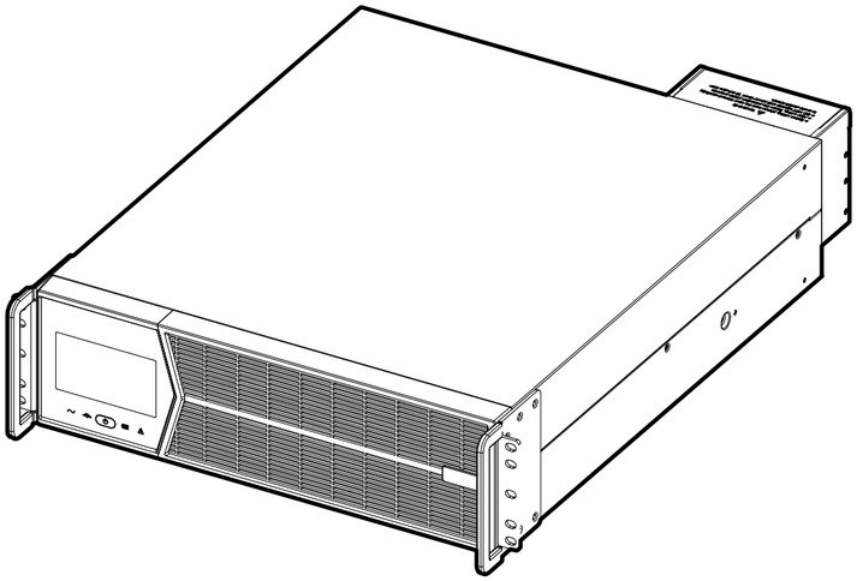

FIGURE 2-1 Appearance

OPERATION PANEL

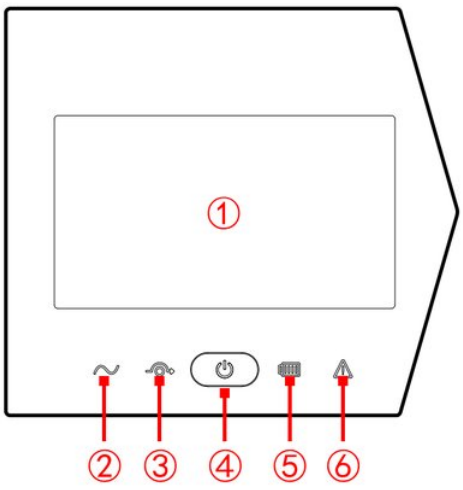

FIGURE 2-2 Operation panel

TABLE 2-1 Operation panel

No.	Name	Illustration
①	Touch screen	Shows the operating status and the settings
②	Mains (inverter) indicator	Green when the UPS is in mains mode
③	Bypass indicator	Green when the UPS output is in bypass mode
④	ON/OFF button	UPS on: press and hold for 3 s to switch it off UPS off: press and hold for 3 s to switch it on Battery cold start (no mains): press and hold for 5 s to 10 s
⑤	Battery (inverter) indicator	Green when the UPS is in battery mode
⑥	Fault indicator	Red when the UPS has a fault

REAR PANEL

- 10 kVA and 20 kVA

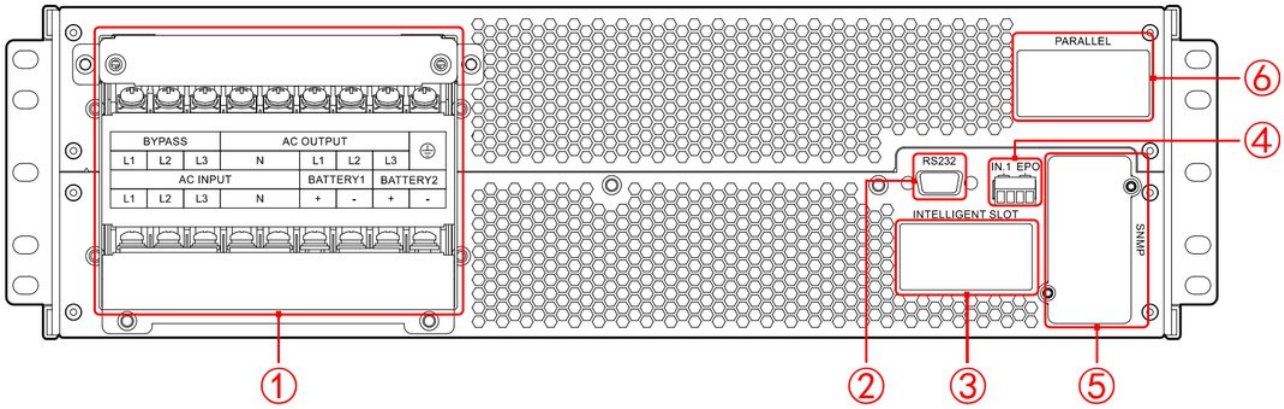

FIGURE 2-3 Rear panel of the 10 kVA and 20 kVA models

TABLE 2-2 Rear panel of the 10 kVA and 20 kVA models

No.	Illustration	No.	Illustration
①	Wiring terminals	④	EPO and input dry contact
②	RS232	⑤	SNMP (optional)
③	Intelligent slot	⑥	Parallel port (optional)

> **NOTE**
> 1. The wiring terminals differ slightly between 33 mode and 31 mode; for the terminals of each mode see 3.4.1 Wiring of the 10 kVA and 20 kVA UPS. 2. Cards for the intelligent slot (optional): SNMP card, RS485 + dry-contact card, protocol transfer card.

- 30 kVA and 40 kVA

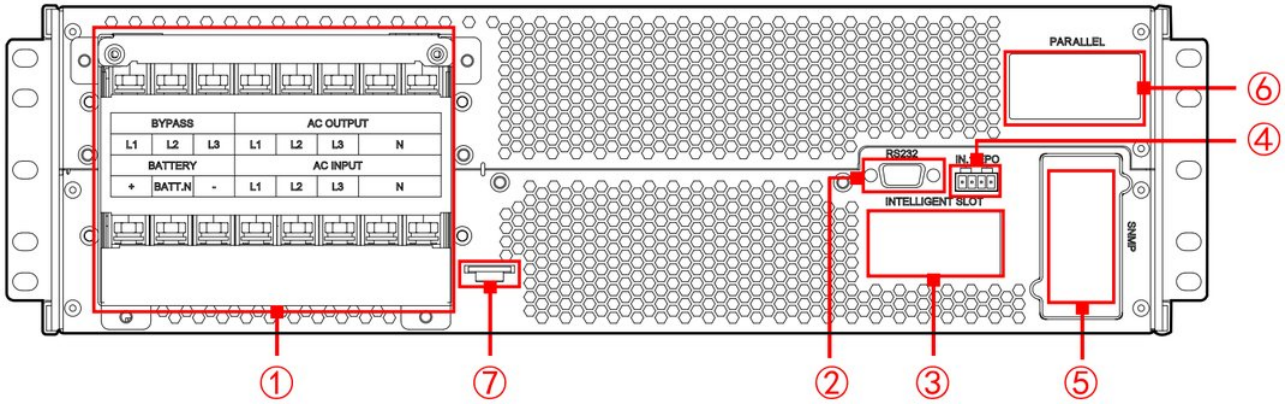

FIGURE 2-4 Rear panel of the 30 kVA and 40 kVA models

TABLE 2-3 Rear panel of the 30 kVA and 40 kVA models

No.	Illustration	No.	Illustration
①	Wiring terminals	⑤	SNMP (optional)
②	RS232	⑥	Parallel port (optional)
③	Intelligent slot	⑦	PE
④	EPO and input dry contact		

NOTE

1. The wiring terminals differ slightly between 33 mode and 31 mode; for the terminals of each mode see 3.4.1 Wiring of the 10 kVA and 20 kVA UPS. 2. Cards for the intelligent slot (optional): SNMP card, RS485 + dry-contact card, protocol transfer card. 3. IN.1 is a programmable dry-contact input. Its default function is maintenance bypass switch status detection ("BMD") and its default state is NC (normally closed: the input is short-circuited in normal operation). 4. If the BMD and EPO functions are not used, short-circuit the ports with the 4-pin terminal supplied. To use a function, remove the jumper wire from the BMD or EPO port and connect the port to the status signal of the maintenance bypass breaker or to the EPO switch.

CAUTION

For the UPS to work, the IN.1 and EPO ports on the rear panel must be short-circuited. The default function of IN.1 is BMD; the default state of IN.1 and EPO is NC.

- If the BMD port is opened, the UPS transfers to bypass and the touch screen shows "maintenance bypass ON". The alarm clears automatically as soon as the port is short-circuited again.
- If the EPO port is opened, the UPS switches off both the inverter and the bypass output and the touch screen shows an EPO fault. To clear it, switch the UPS off completely and short-circuit the EPO port again.

2.1.3 Communication Cards

The IST9 accepts these optional cards: parallel card, RS485 + dry-contact card, protocol transfer card and SNMP card.

TABLE 2-4 Communication options and their ports (optional)

Communication method	Sketch map	Communication port	Functional instructions
Parallel Kit-T (2m) NT-PA (optional)	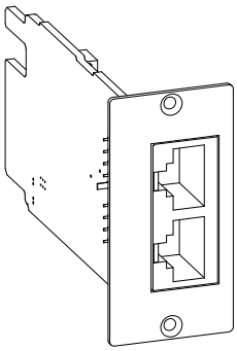	Parallel port (optional)	CAN communication between the units of a parallel system, when a single UPS is upgraded to parallel operation. Not hot-swappable. See the Parallel Kit-T (2m) NT-PA installation guide.
Dry-contact Kit (Y5) NT-RS485Y5 (optional)	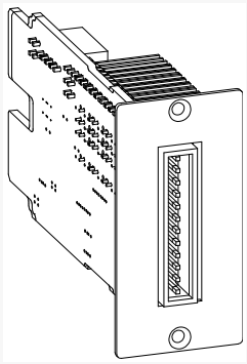	Intelligent slot (optional)	Three output dry contacts: mains status, battery status and inverter status (bypass output status optional). Two input dry contacts: battery temperature sensing (for temperature compensation) and battery breaker status (remote on/off optional). See the Dry-contact Kit (Y5) NT-RS485Y5 installation guide.
Lithium battery protocol card (optional)	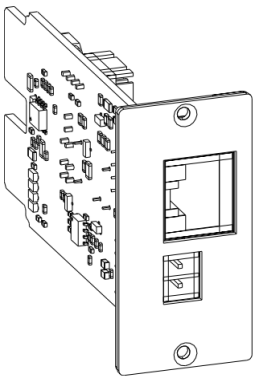	Intelligent slot (optional)	One RS485 channel (reserved port) for monitoring; The RS485 interface on the RJ45 socket communicates with the lithium battery system. See the Protocol Transfer Kit NT-MODBUS installation guide.
SNMP card (optional)	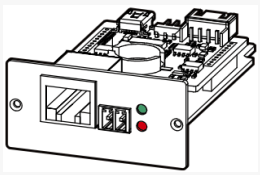	Intelligent slot/SNMP (optional)	Remote monitoring through a web page. See the AEC SNMP card manual.

2.1.4 Accessories

- 10 kVA and 20 kVA

The 10 kVA and 20 kVA models come with four kinds of connector jumper, shown in Table 2-5. Fit the jumpers to the matching terminals at the rear of the UPS to set it to 33, 31 or 11 mode.

Figure 2-5, Figure 2-6 and Figure 2-7 show where the jumpers are fitted.

TABLE 2-5 Connector jumpers

Connector jumper No.	Illustration	Sketch map
①	2PIN connector jumper	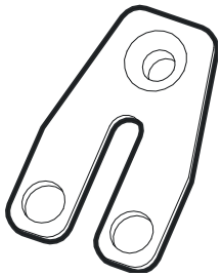
②	2PIN connector jumper	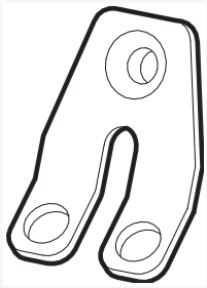
③	3PIN connector jumper	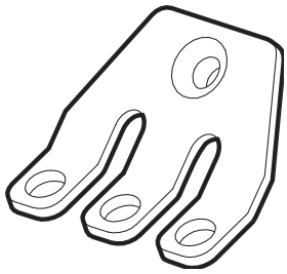
④	3PIN connector jumper	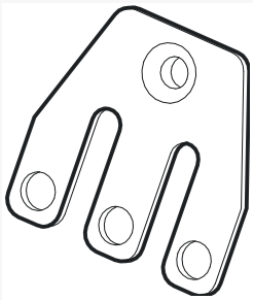

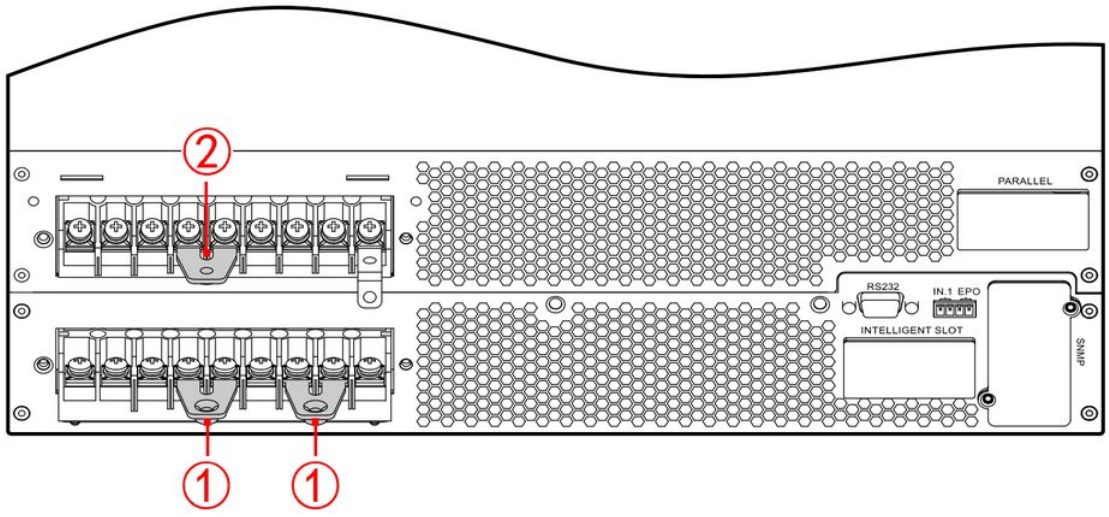

FIGURE 2-5 Jumper positions, 10 kVA and 20 kVA, 33 mode

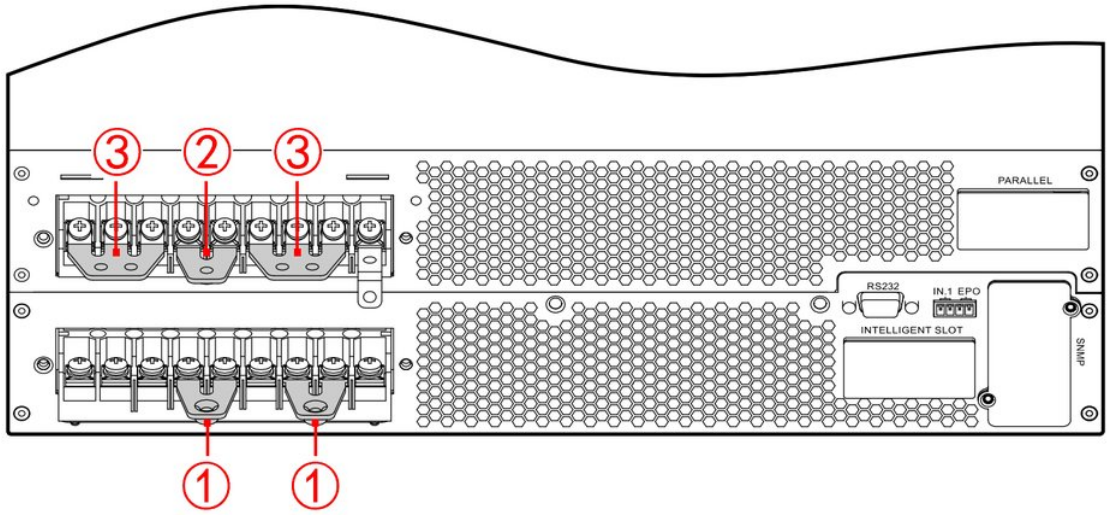

FIGURE 2-6 Jumper positions, 10 kVA and 20 kVA, 31 mode

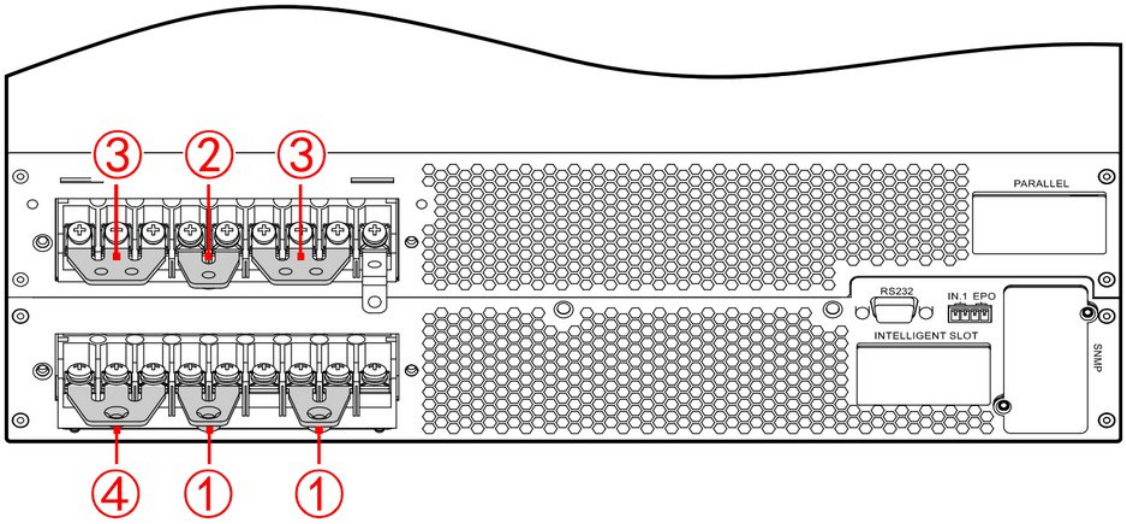

FIGURE 2-7 Jumper positions, 10 kVA and 20 kVA, 11 mode

- 30 kVA and 40 kVA

The 30 kVA and 40 kVA models come with one kind of connector jumper, shown in Table 2-6. It links the three bypass input terminals and the three output terminals, and is used in 31 mode only.

TABLE 2-6 Connector jumpers

Connector jumper No.	Illustration	Sketch map
①	3PIN connector jumper	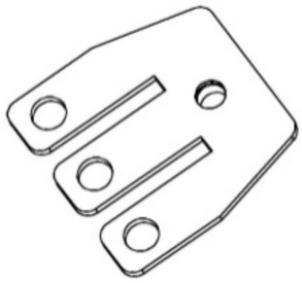

Figure 2-8 shows where the jumpers are fitted.

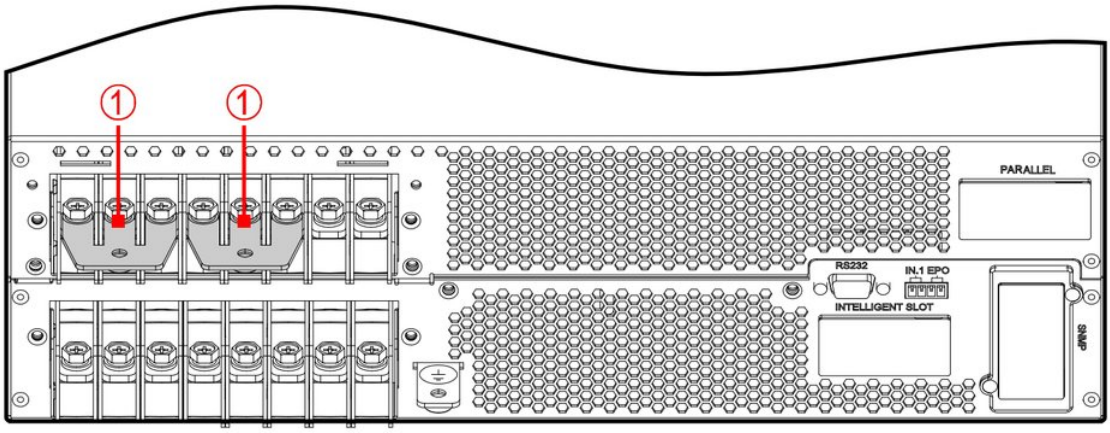

FIGURE 2-8 Jumper positions, 30 kVA and 40 kVA, 31 mode

2.2 Operating Principle

2.2.1 Operating Principle Diagram

Figure 2-9 shows the operating principle of the UPS.

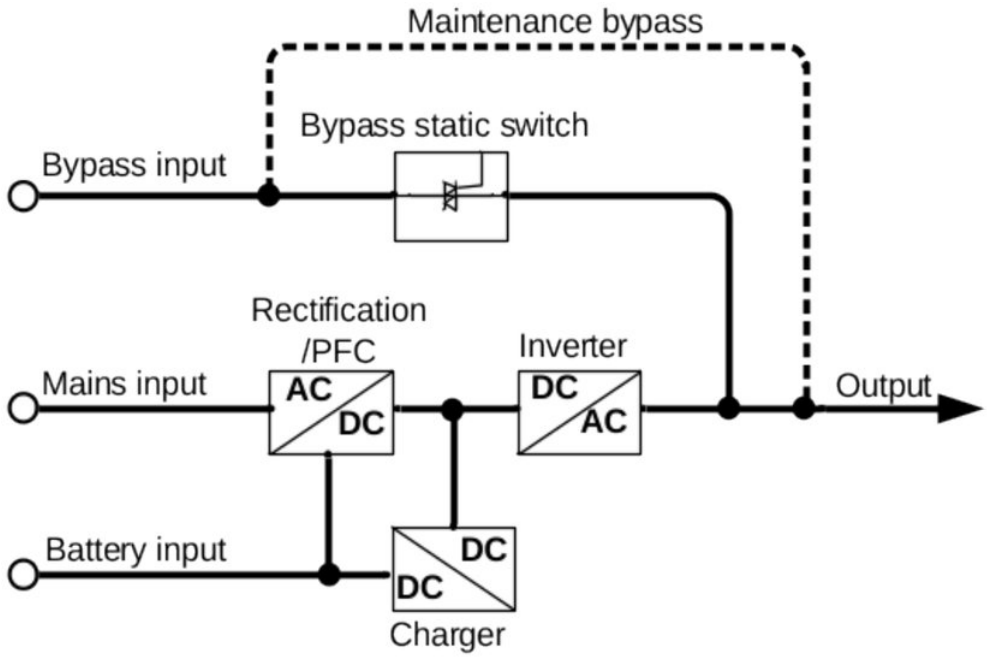

FIGURE 2-9 Operating principle diagram

The IST9 consists of the rectifier/PFC, inverter, charger, bypass static switch, etc. Its inputs are the mains input, the bypass input and the battery input; its outputs are the inverter output, the bypass output and the maintenance bypass output (when fitted).

When the mains is normal, the rectifier starts and the charger charges the battery. With the UPS off and the bypass normal, the load is supplied through the bypass. When the UPS is switched on, the rectifier/PFC boosts the mains to the DC bus voltage, the inverter turns it into a pure sine wave, and the output transfers from bypass to inverter.

When the mains fails, the rectifier/PFC boosts the battery voltage to the DC bus voltage and the inverter keeps supplying a pure sine wave to the load. When the mains returns, the UPS goes back from battery mode to mains mode automatically.

2.2.2 Operating Modes

HOW IT WORKS **Operating modes at a glance**

Normal (online) mode

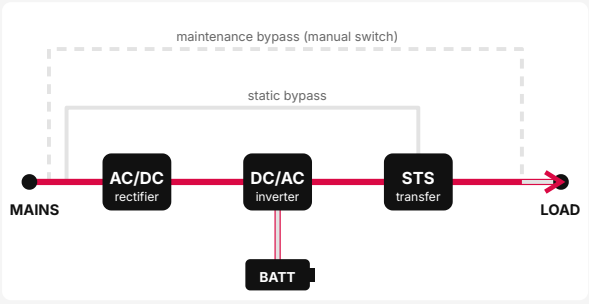

Mains present: the rectifier and the inverter supply the load with regulated power; the battery is kept charged.

Battery mode

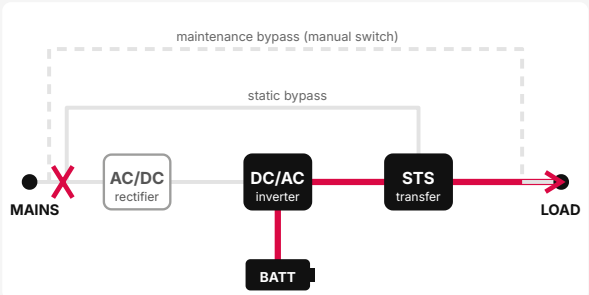

Mains outside its limits or missing: the battery feeds the inverter, with no break for the load.

Bypass mode

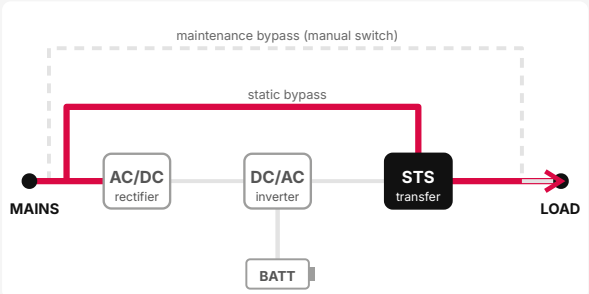

Overload, fault or inverter off: the load is supplied from the mains through the static bypass.

ECO mode

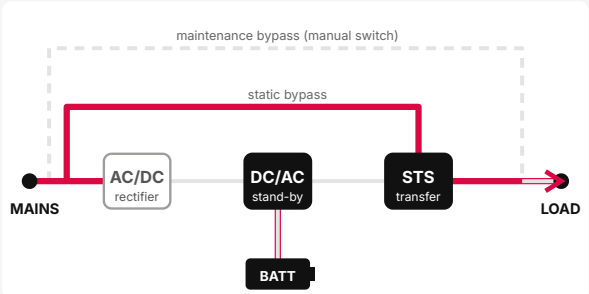

Mains inside the ECO window: the load runs on the bypass for the highest efficiency; the inverter takes over if the mains goes out of range.

Maintenance bypass

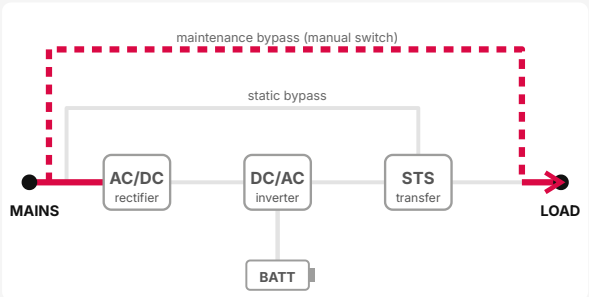

For service: the load is fed from the mains by the manual switch and the UPS can be switched off. Hazardous voltage stays on the terminals.

power flow working idle

The UPS has five operating modes: normal (mains) mode, battery mode, bypass mode, ECO mode and maintenance bypass mode. Maintenance bypass mode needs the distribution module.

NORMAL (MAINS) MODE

When the mains is normal, the UPS supplies the load through the inverter and charges the battery at the same time, as shown in Figure 2-10.

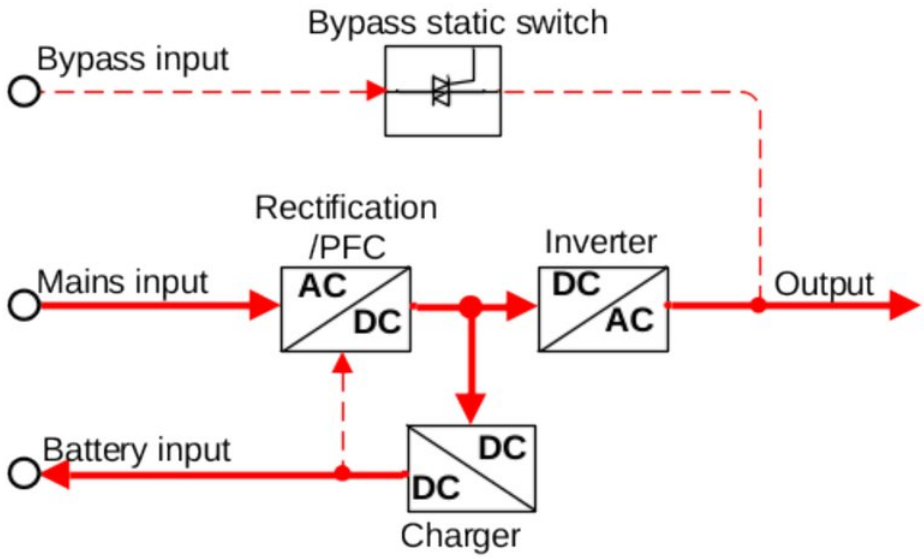

FIGURE 2-10 Normal (mains) mode (the thick line shows the energy flow)

BATTERY MODE

When the mains fails, the rectifier transfers to the battery immediately and boosts the battery voltage to keep the DC bus up, so that the inverter output continues without interruption, as shown in Figure 2-11.

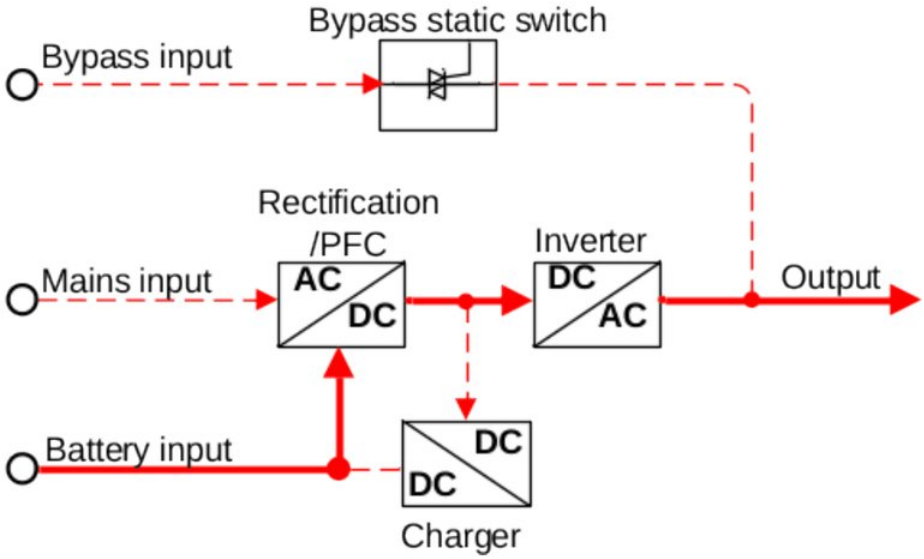

FIGURE 2-11 Battery mode (the thick line shows the energy flow)

If the mains returns before the battery is exhausted, the rectifier transfers back to the mains automatically and charges the battery: the UPS is back in normal mode. If the mains stays off, the UPS gives an audible and visual alarm as the battery runs down and stops at the battery low-voltage point; the buzzer sounds continuously and the load is no longer supplied. With the mains completely off, the UPS switches itself off about 1 minute later, so that the battery is not slowly discharged and its life is protected. When the mains returns, the UPS starts automatically in normal mode.

BYPASS MODE

When the bypass voltage is normal and the UPS is off or has a fault (inverter overload, current surge, IGBT over-temperature, etc.), the load is supplied through the bypass. When the UPS is on and the fault has cleared, the output returns to the inverter. If the same fault occurs more than 5 times in a short time, the UPS locks on bypass until it is switched off manually (or the power is removed) and the fault is cleared; after a restart it works normally again.

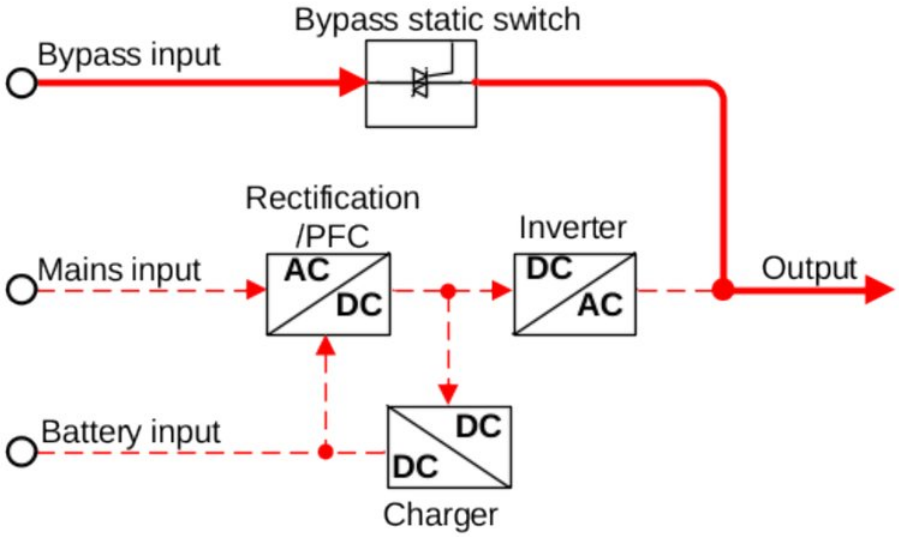

FIGURE 2-12 Bypass mode (the thick line shows the energy flow)

ECO MODE (SINGLE UPS ONLY)

ECO mode is an economy mode, with an efficiency of up to 99 %, for loads that do not need the highest power quality. In ECO mode the load is supplied through the bypass while the bypass voltage is normal, and transfers to the inverter when the bypass voltage becomes abnormal.

MAINTENANCE BYPASS MODE (WITH THE DISTRIBUTION MODULE)

When the UPS must be serviced without interrupting the load, switch off the inverter so that the UPS works in bypass mode, close the maintenance bypass breaker, then open the mains input, bypass input and output breakers. The load is now supplied by the maintenance bypass and the UPS inside is de-energised, so it can be serviced safely.

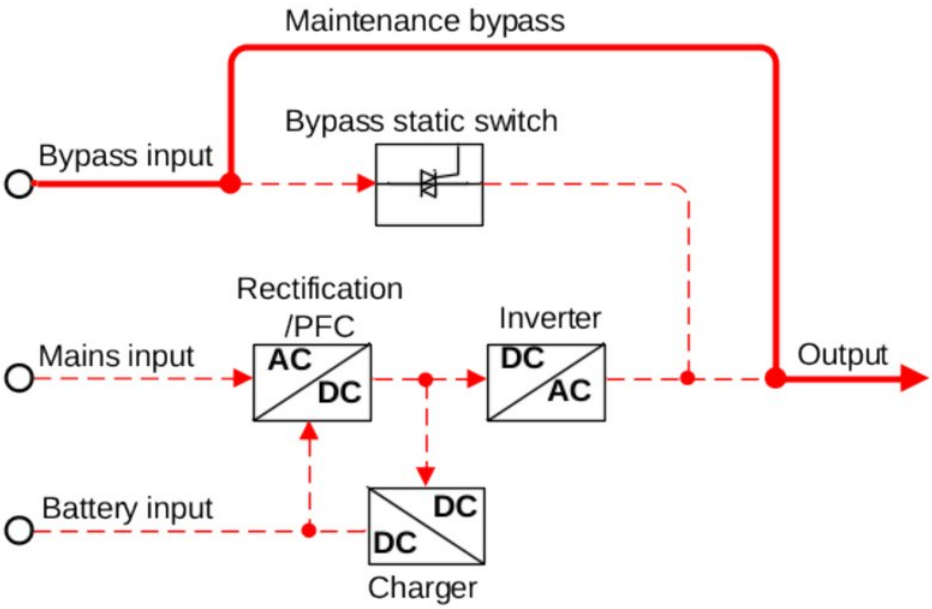

FIGURE 2-13 Maintenance bypass mode (the thick line shows the energy flow)

2.3 Optional Accessories

The IST9 can be fitted with the distribution module (in the AEC configurations: the Power Distribution Box with Maintenance Breaker, supplied with every IST9) and with battery boxes (AEC rack battery cabinet BBJ2, 16 × 12 V 9 Ah).

2.3.1 Distribution Module

APPEARANCE

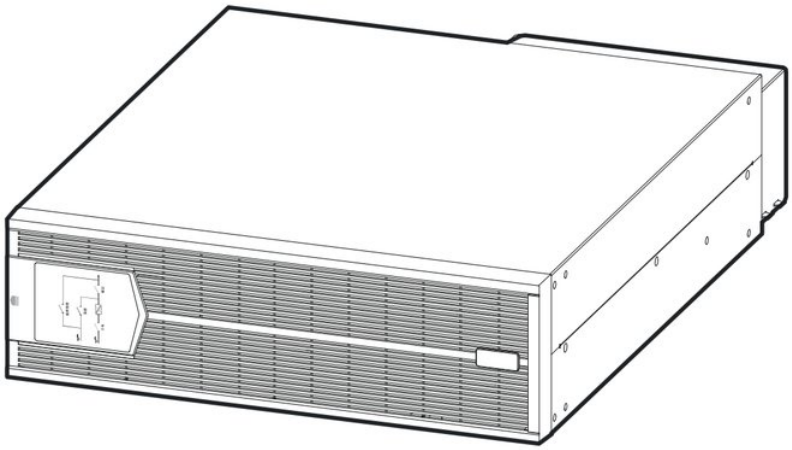

FIGURE 2-14 Distribution module

DISTRIBUTION MODULE FOR 10 KVA AND 20 KVA: FRONT PANEL

The breakers of the distribution module are behind its front panel, which must be removed first. Figure 2-15 shows how to remove it.

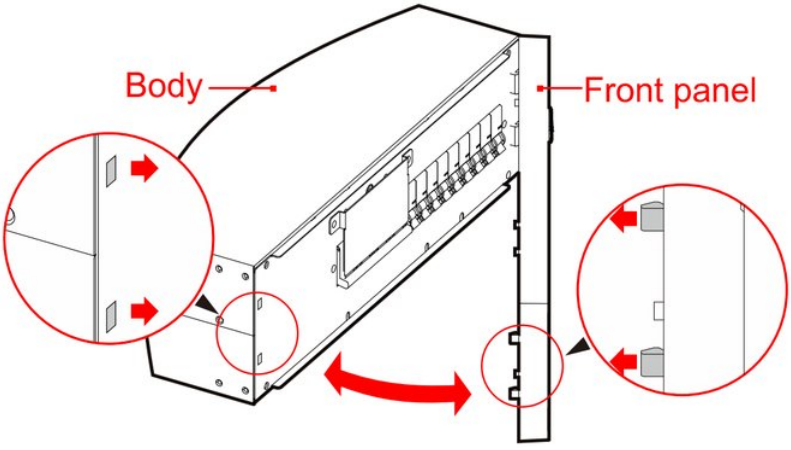

FIGURE 2-15 Removing the front panel of the distribution module (10 kVA and 20 kVA)

> **NOTE**
> To refit the front panel, first insert the clips on the right side into the module, then those on the left side.

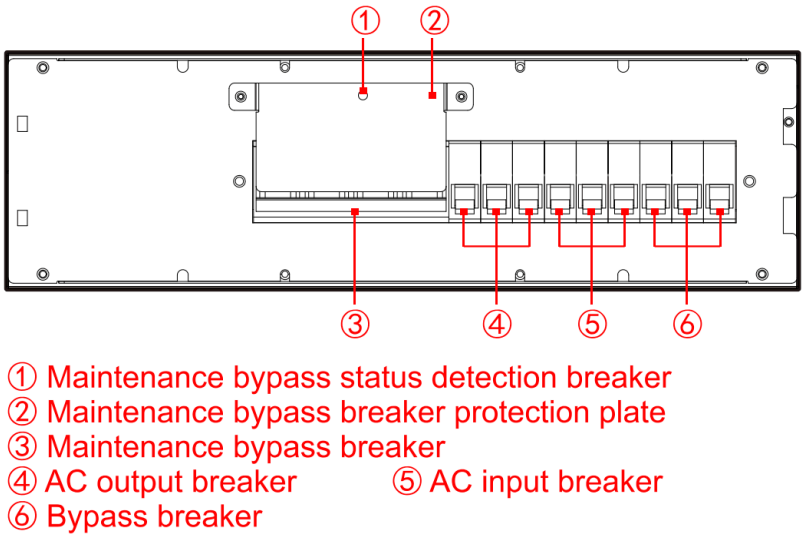

FIGURE 2-16 Distribution module for 10 kVA and 20 kVA, front panel removed

DISTRIBUTION MODULE FOR 10 KVA AND 20 KVA: REAR PANEL

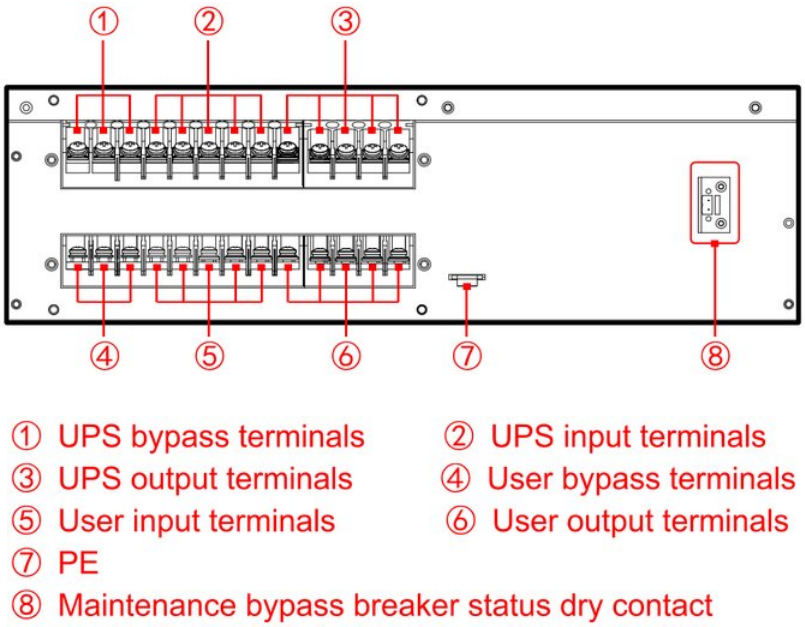

FIGURE 2-17 Distribution module for 10 kVA and 20 kVA: rear panel

DISTRIBUTION MODULE FOR 30 KVA AND 40 KVA: FRONT PANEL

The breakers of the distribution module are behind its front panel, which must be removed first. Figure 2-18 shows how to remove it.

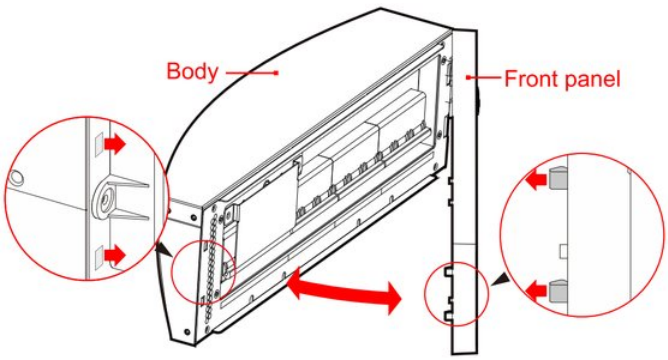

FIGURE 2-18 Removing the front panel of the distribution module (30 kVA and 40 kVA)

NOTE

To refit the front panel, first insert the clips on the right side into the module, then those on the left side.

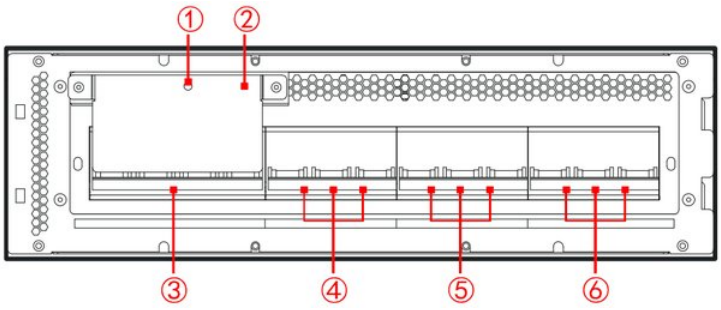

① Maintenance bypass status detection switch
② Protection plate of maintenance bypass breaker
③ Maintenance bypass breaker
④ AC output breaker
⑤ AC input breaker
⑥ Bypass breaker

FIGURE 2-19 Distribution module for 30 kVA and 40 kVA, front panel removed

NOTE

To transfer to maintenance bypass: remove the protective plate of the maintenance bypass breaker; the maintenance bypass detection switch opens automatically and the UPS switches off the inverter and supplies the load through the bypass. Then close the maintenance bypass breaker and open the AC input, bypass and AC output breakers. The load is now supplied by the maintenance bypass, the UPS input and output are disconnected and the UPS can be serviced. To return from maintenance bypass to inverter: connect the cables between the UPS and the distribution module (including the maintenance bypass detection signal cable), then close the AC input, bypass and AC output breakers. When the UPS input is normal and the touch screen shows the bypass output voltage, open the maintenance bypass breaker and refit and lock its protective plate. Finally press the ON/OFF button to start the inverter.

DISTRIBUTION MODULE FOR 30 KVA AND 40 KVA: REAR PANEL

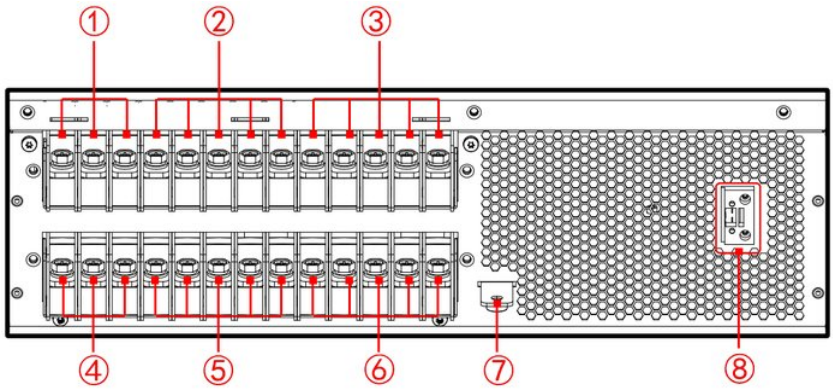

① UPS bypass terminals
② UPS input terminals
③ UPS output terminals
④ User bypass terminals
⑤ User input terminals
⑥ User output terminals
⑦ PE
⑧ Maintenance bypass breaker status dry contact

FIGURE 2-20 Distribution module for 30 kVA and 40 kVA: rear panel

2.3.2 Battery Box

APPEARANCE

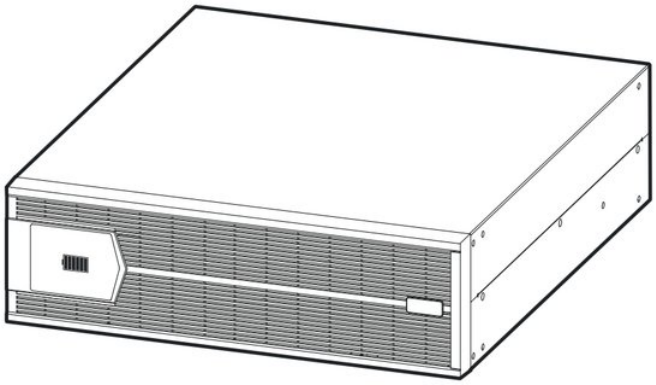

FIGURE 2-21 Battery box

REAR PANEL

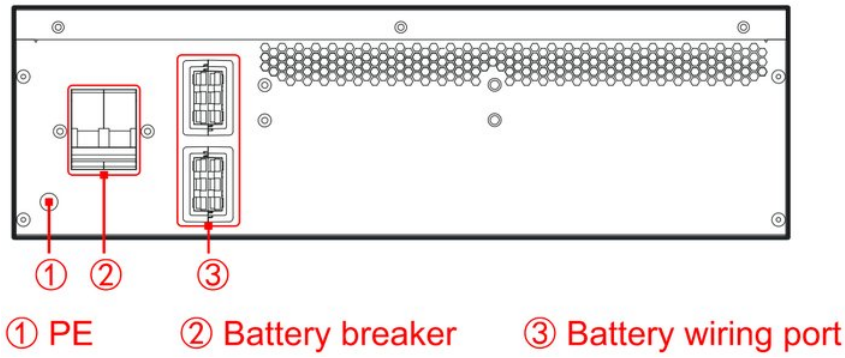

FIGURE 2-22 Battery box: rear panel

03

CHAPTER 3

Installation

This chapter describes the installation of the UPS: unpacking and inspection, cable selection, installation, electrical connection, etc.

IN THIS CHAPTER

3.1 Unpacking and Inspection
3.2 Installation Preparation
3.3 Mechanical Installation
3.4 Electrical Connection

ROADMAP **From delivery to operation**

1. **Read the safety instructions** — Section 1.1
2. **Unpack and check the delivery** — Section 3.1
3. **Choose the place and prepare the cables and breakers** — Section 3.2
4. **Install and connect** — Section 3.4
5. **Start** — Section 5.2
6. **Check the display and the settings** — Section 4.4
7. **Look after** — Section 6.1

3.1 Unpacking and Inspection

Unpack the UPS and check it:

- Inspect the UPS for shipping damage. If any is found, report it to the carrier immediately.
- Check against the delivery list that all accessories are present and correct. If there is any discrepancy, contact AEC immediately.

3.2 Installation Preparation

3.2.1 Tools

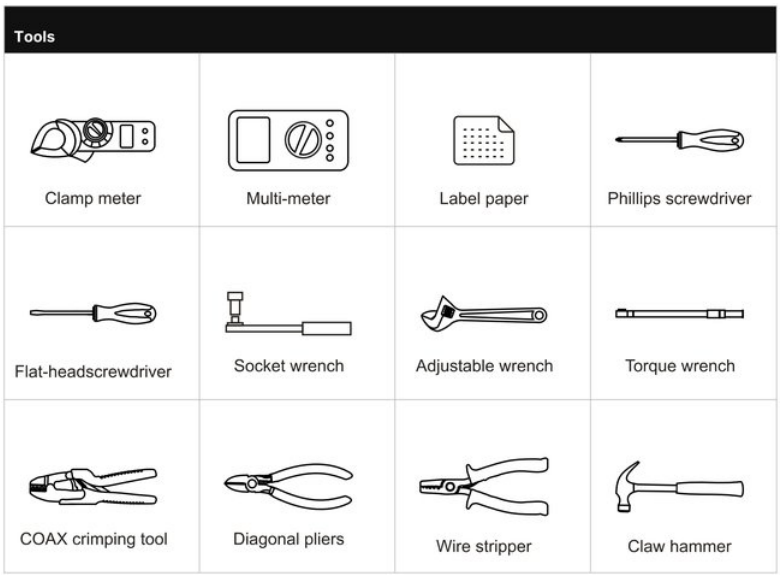

Tools

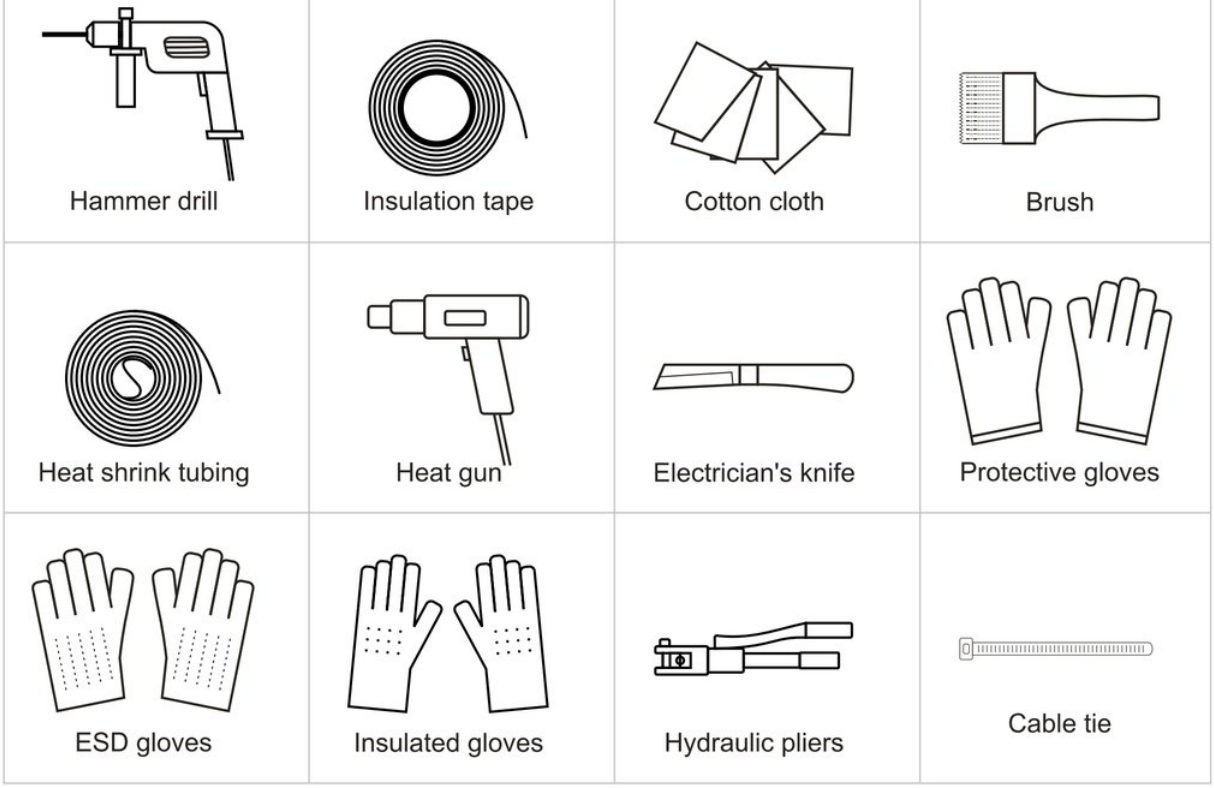

3.2.2 Breakers and Cables

Choose the AC input and output cables, the DC (battery) cables and the breakers according to the maximum steady-state phase current of the UPS. Table 3-1 gives the maximum steady-state phase current in each operating mode, Table 3-2 the rated current of the recommended breakers and Table 3-3 to Table 3-5 the minimum recommended cable cross-sections.

TABLE 3-1 Maximum steady-state phase current of the UPS

Type	10 kVA			20 kVA			30 kVA		40 kVA	
	33	31	11	33	31	11	33	31	33	31
AC input (A)	19	19	57	35	35	105	59	59	75	75
Bypass input (A)	15	46	46	31	91	91	46	138	61	182
DC input (A)	56	56	56	56	56	56	83	83	111	111
AC output (A)	15	46	46	30	91	91	46	138	61	182

3.2.3 Input Breaker

Fit a breaker (preferably with backfeed protection, double-pole disconnection) or a distribution cabinet rated for the UPS upstream of the UPS input, to isolate it from the mains. Because of the charging power and the inrush current at switch-on, the breaker must be rated 1.5 to 2 times the maximum input current of the UPS and must not have residual-current (leakage) protection, to avoid nuisance tripping. The distribution board must be built by a qualified company. The DC (battery) breaker must be rated above 250 Vdc. See Table 3-2 for the breaker ratings.

TABLE 3-2 Recommended breakers

Type	10 kVA			20 kVA			30 kVA		40 kVA	
	33	31	11	33	31	11	33	31	33	31
AC input (A)	32 (3P)	32 (3P)	80 (1P)	63 (3P)	63 (3P)	150 (1P)	100 (3P)	100 (3P)	100 (3P)	100 (3P)
Bypass input (A)	32 (3P)	63 (1P)	63 (1P)	50 (3P)	125 (1P)	125 (1P)	100 (3P)	200 (1P)	100 (3P)	250 (1P)
DC input (A)	100 (3P)	100 (3P)	100 (3P)	100 (3P)	100 (3P)	100 (3P)	160 (3P)	160 (3P)	200 (3P)	200 (3P)
AC output (A)	32 (3P)	63 (1P)	63 (1P)	50 (3P)	125 (1P)	125 (1P)	100 (3P)	200 (1P)	100 (3P)	250 (1P)

3.2.4 Cables

Table 3-3, Table 3-4 and Table 3-5 give the recommended cross-sections for the AC input, output and battery cables. The values are for reference, for cables about 5 m long; for cables longer than 20 m, increase the cross-section.

> **NOTE**
> When a 10 kVA or 20 kVA UPS is set to 31 or 11 mode, the three-phase jumpers link the phases at the terminals, so the bypass input and output cables are sized as one single cable. In 11 mode the AC input has no jumper, so the AC input cables are sized as three cables. With a single-phase input, the three input live conductors must all be connected to the same phase. When a 30 kVA or 40 kVA UPS is set to 31 mode, the bypass input and output cables are sized as one single cable. Where a single cable would be larger than 35 mm², use two cables in parallel.

TABLE 3-3 Recommended cable cross-sections, 10 kVA and 20 kVA (mm², ambient 25 °C)

Type	10 kVA			20 kVA		
Phase mode	**33**	**31**	**11**	**33**	**31**	**11**
AC input, live (L1/L2/L3)	4*3	4*3	4*3	10*3	10*3	10*3
AC input, neutral (N)	4*1	10*1	10*1	10*1	16*1	16*1
Bypass input, live (L1/L2/L3)	4*3	10*1	10*1	10*3	16*1	16*1
AC output, live (L1/L2/L3)	4*3	10*1	10*1	10*3	16*1	16*1
AC output, neutral (N)	4*1	10*1	10*1	10*1	16*1	16*1
DC input (+/BATN/-)	10*3	10*3	10*3	10*3	10*3	10*3
Protective earth (PE)	6*1	6*1	6*1	10*1	10*1	10*1

TABLE 3-4 Recommended cable cross-sections, 30 kVA and 40 kVA (mm², ambient 25 °C)

Type	30 kVA		40 kVA	
Phase mode	**33 mode**	**31 mode**	**33 mode**	**31 mode**
AC input, live (L1/L2/L3)	16*3	16*3	16*3	16*3
AC input, neutral (N)	16*1	16*2 (parallel)	16*1	25*2 (parallel)
Bypass input, live (L1/L2/L3)	10*3	35*1	16*3	25*2 (parallel)
AC output, live (L1/L2/L3)	10*3	35*1	16*3	25*2 (parallel)
AC output, neutral (N)	10*1	16*2 (parallel)	16*1	25*2 (parallel)
DC input (+/BATN/-)	16*3	16*3	25*3	25*3
Protective earth (PE)	16*1	16*1	16*1	25*1

TABLE 3-5 Cables and matching wiring terminals

Cable cross-section (unit: mm²)	Wiring terminal type
4	RV3.5-6
6	RV5.5-6
10	RNBS8-6
16	RNBS14-6
25	RNBS22-6
35	RNBS38-6

> **NOTE**
> The cables supplied with the UPS are certified (IEC/UL) and meet the applicable safety standards. The cross-sections above are reference values for cables about 5 m long; for cables longer than 20 m, increase the cross-section accordingly.

3.3 Mechanical Installation

The UPS can be installed as a tower or in a rack, depending on the space available:

- Rack installation: the UPS goes in the lower position and the distribution module above it, for easy cabling and operation.
- Tower installation: the distribution module stands to the left of the UPS, for easy cabling and operation, and the battery box to the left of the distribution module, as shown in Figure 3-1.

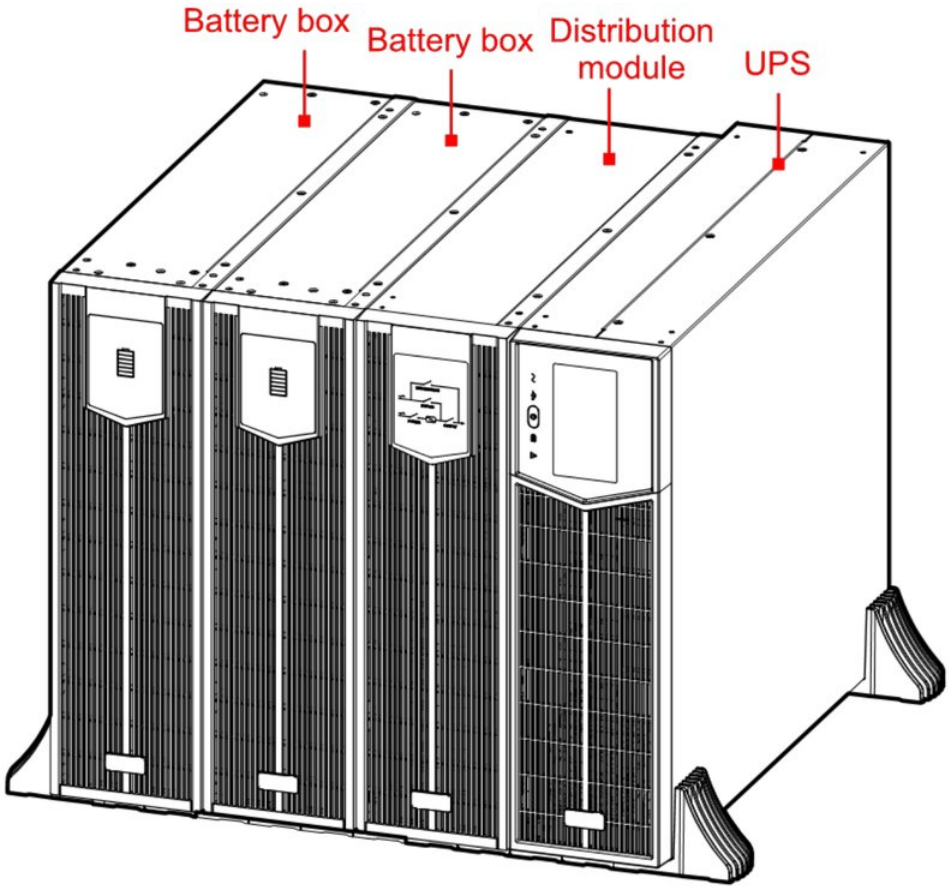

FIGURE 3-1 Tower Installation

3.3.1 Tower Installation

UPS ON ITS OWN

PROCEDURE

1. Take a pair of support bases and a 1U joint base and assemble them, as shown in Figure 3-2.

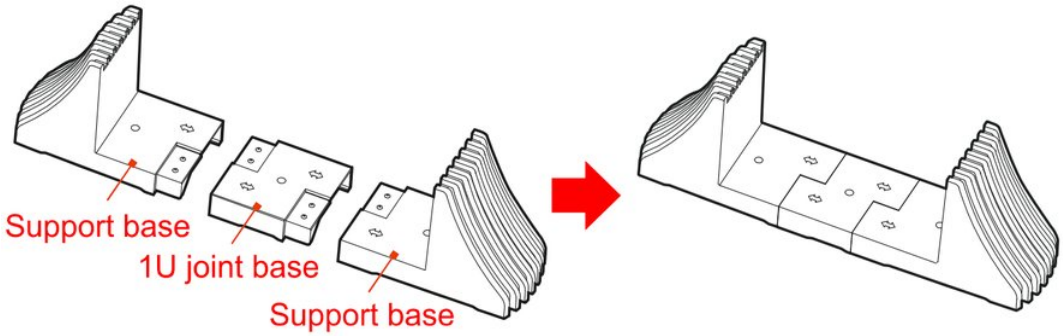

FIGURE 3-2 Assembling the base

2. Place the UPS on the assembled base, as shown in Figure 3-3.

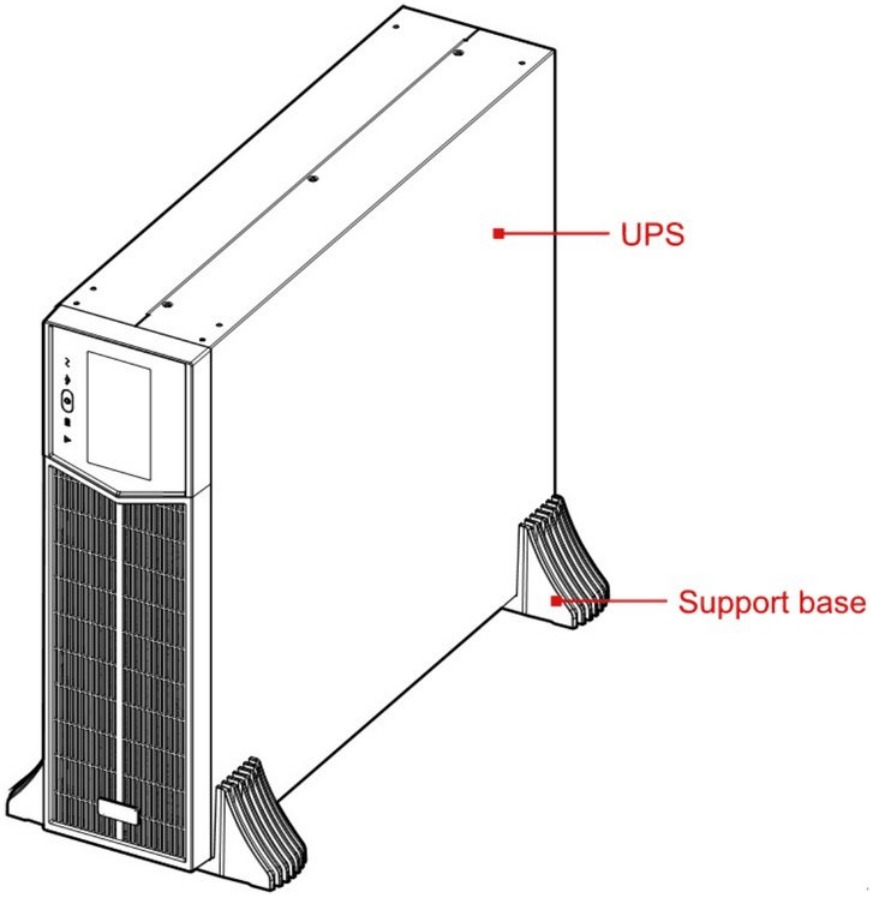

FIGURE 3-3 Placing the UPS

UPS WITH BATTERY BOX OR DISTRIBUTION MODULE

The procedure is the same for a battery box and for a distribution module; the example below shows one UPS with one distribution module.

PROCEDURE

1. Take a pair of support bases and the 1U joint bases and assemble them, as shown in Figure 3-4.

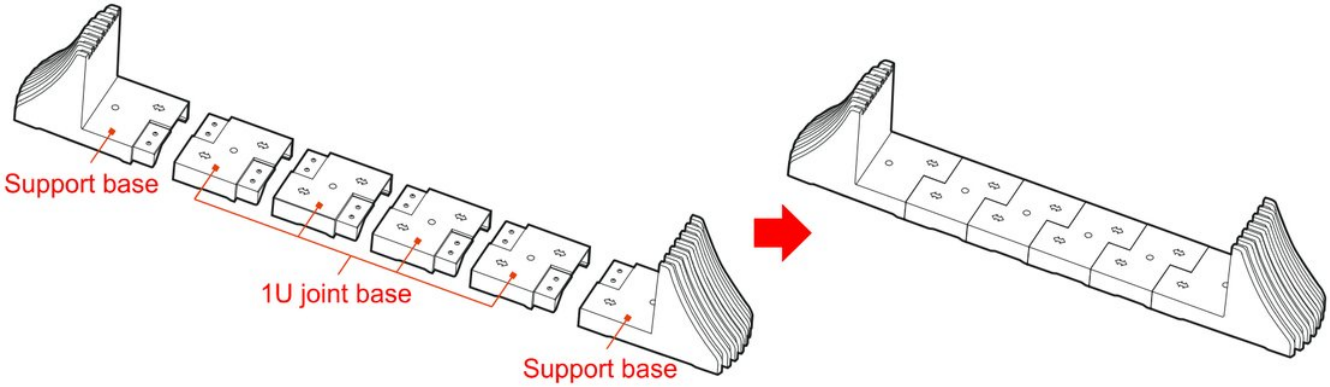

FIGURE 3-4 Assembling the base

> **NOTE**
> Each additional accessory needs 3 more 1U joint bases, assembled in the same way.

2. Place the UPS and the distribution module on the assembled base, as shown in Figure 3-5.

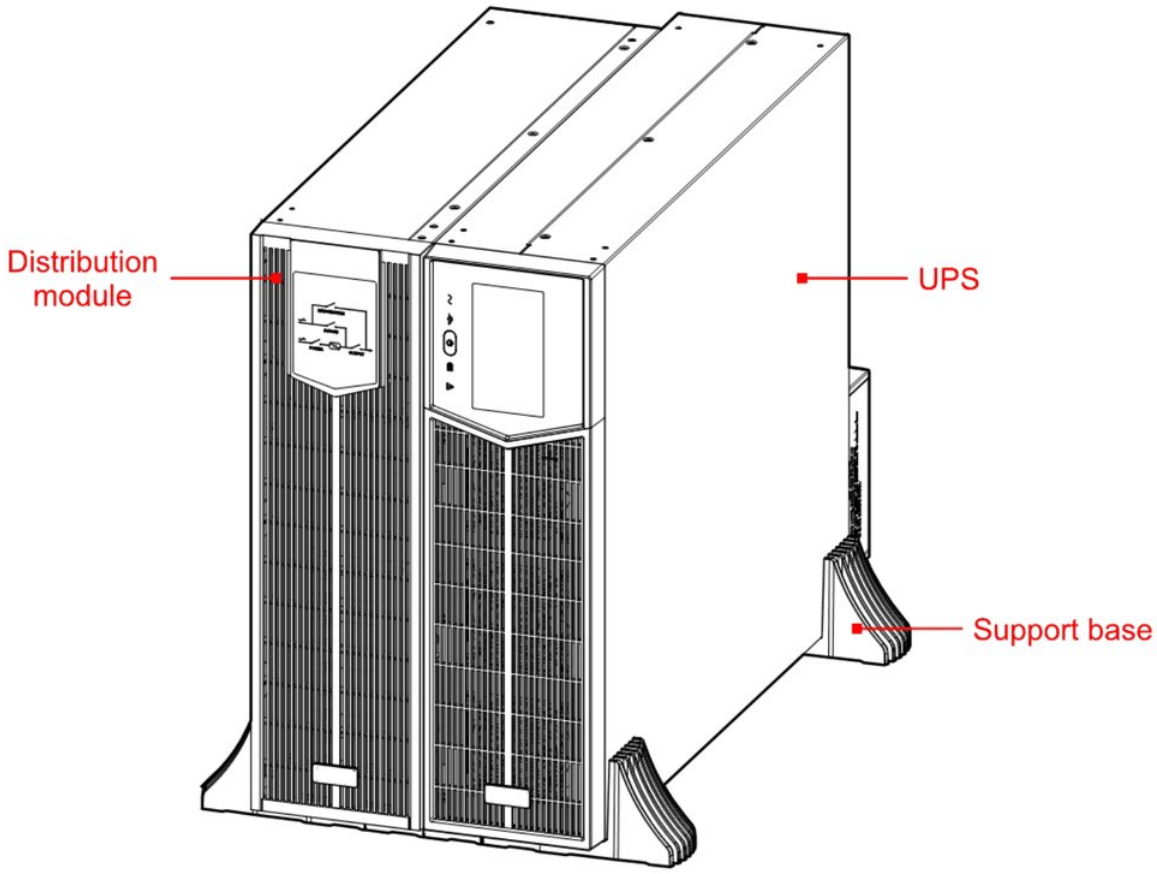

FIGURE 3-5 Placing the UPS and the distribution module

3. Fix the joining brackets with their screws on top of the UPS and the distribution module, as shown in Figure 3-6.

> **CAUTION**
> Each pair of adjacent units is joined by two brackets on top: every additional accessory (distribution module or battery box) needs two more brackets.

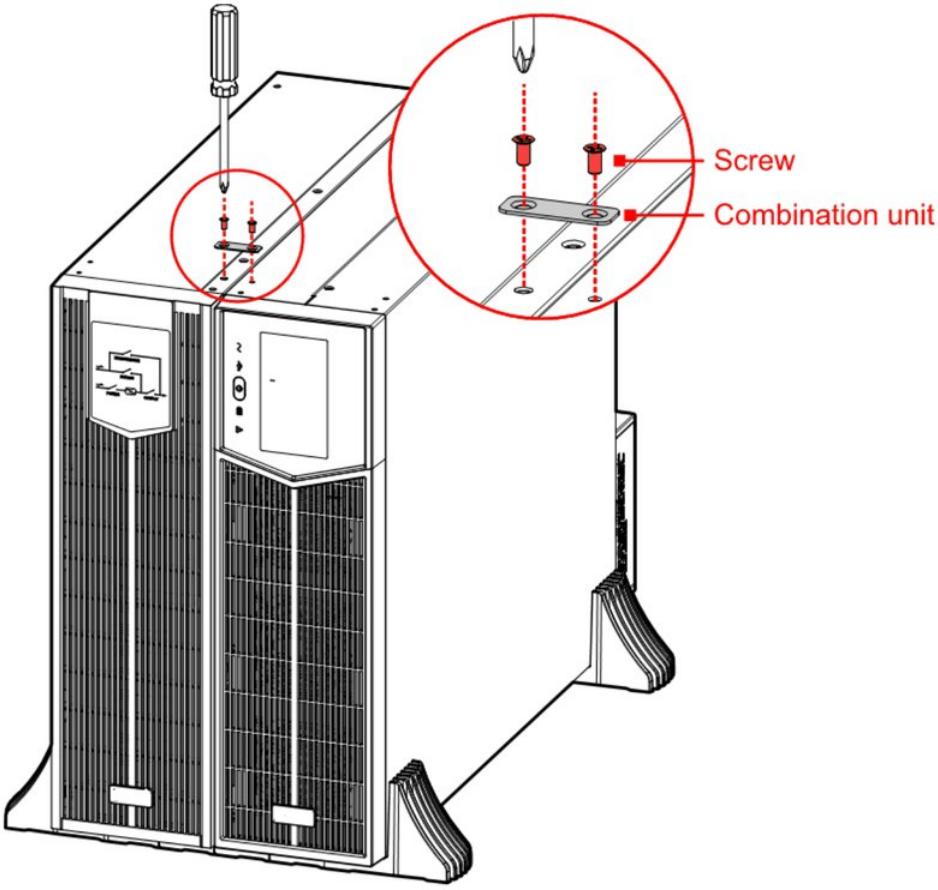

FIGURE 3-6 Fitting the joining brackets

3.3.2 Rack Installation

The IST9, its distribution module and its battery boxes all fit a standard 19-inch rack cabinet.

> **NOTE**
>
> The procedure is the same for the UPS, the battery box and the distribution module; the example below shows the UPS.

PROCEDURE

1. Fix the two 3U handles to the sides of the UPS with M4×8 countersunk screws, as shown in Figure 3-7.

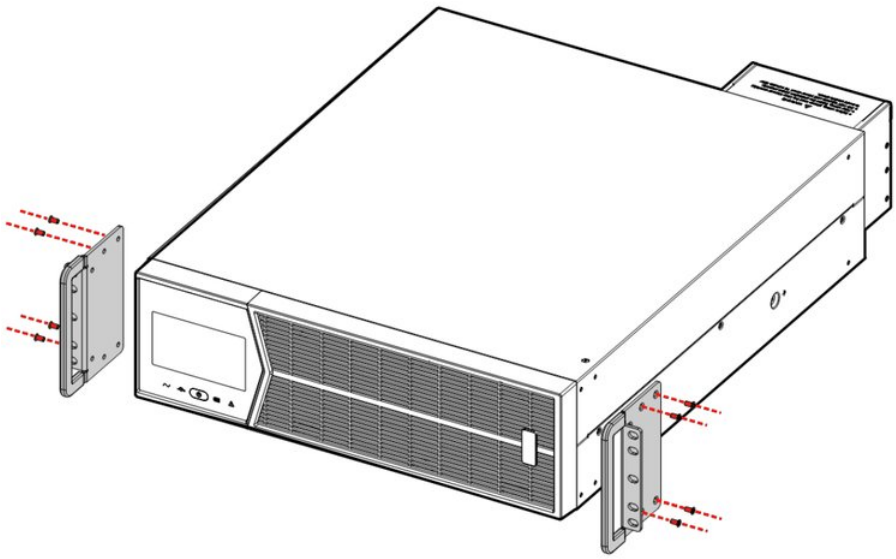

FIGURE 3-7 Fitting the 3U handles

WARNING

Do not carry the UPS, the battery box or the distribution module by the 3U handles.

The front panel is removable: do not apply any force to it when moving the unit.

At least two people are needed to move the unit.

2 Slide the UPS into the cabinet and fix it with screws, as shown in Figure 3-8.

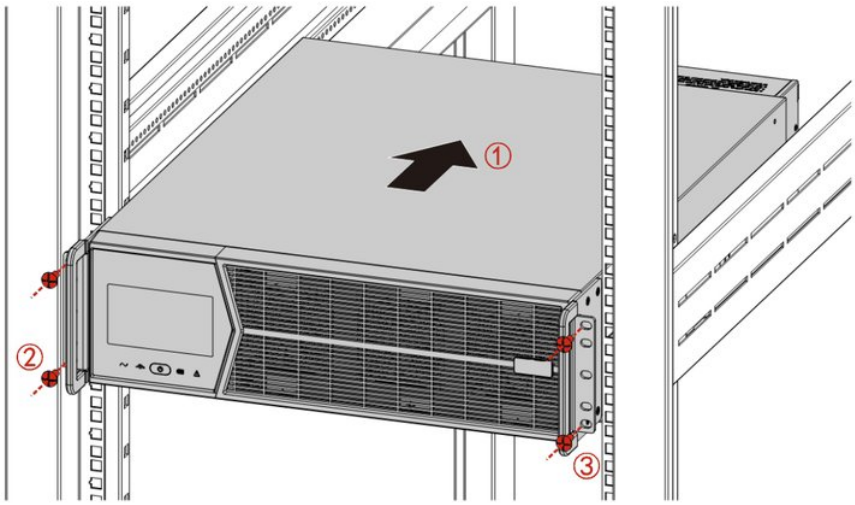

FIGURE 3-8 Fixing the UPS

CAUTION

Battery boxes are heavy: install them from the bottom up, below the UPS.

3.4 Electrical Connection

CAUTION

Before connecting, make sure the external mains and battery breakers are all open. Never connect live cables.

CAUTION

Do not route power cables where they can be stepped on or tripped over.

NOTE

With the optional distribution module, wire the distribution module first, then the UPS.

3.4.1 Wiring of the 10 kVA and 20 kVA UPS

33 MODE

Figure 3-9 shows the input and output wiring in 33 mode.

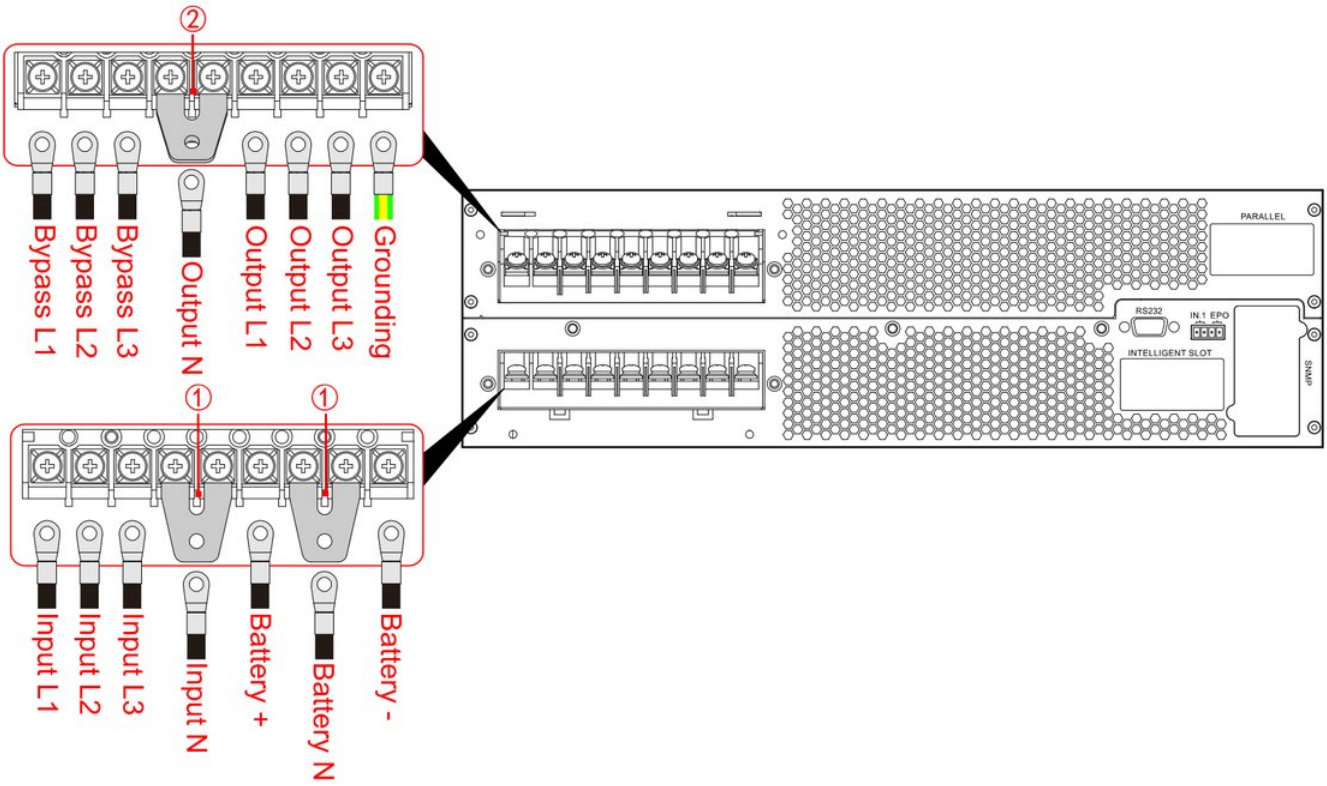

FIGURE 3-9 Wiring in 33 mode, 10 kVA and 20 kVA

31 MODE

Figure 3-10 shows the input and output wiring in 31 mode.

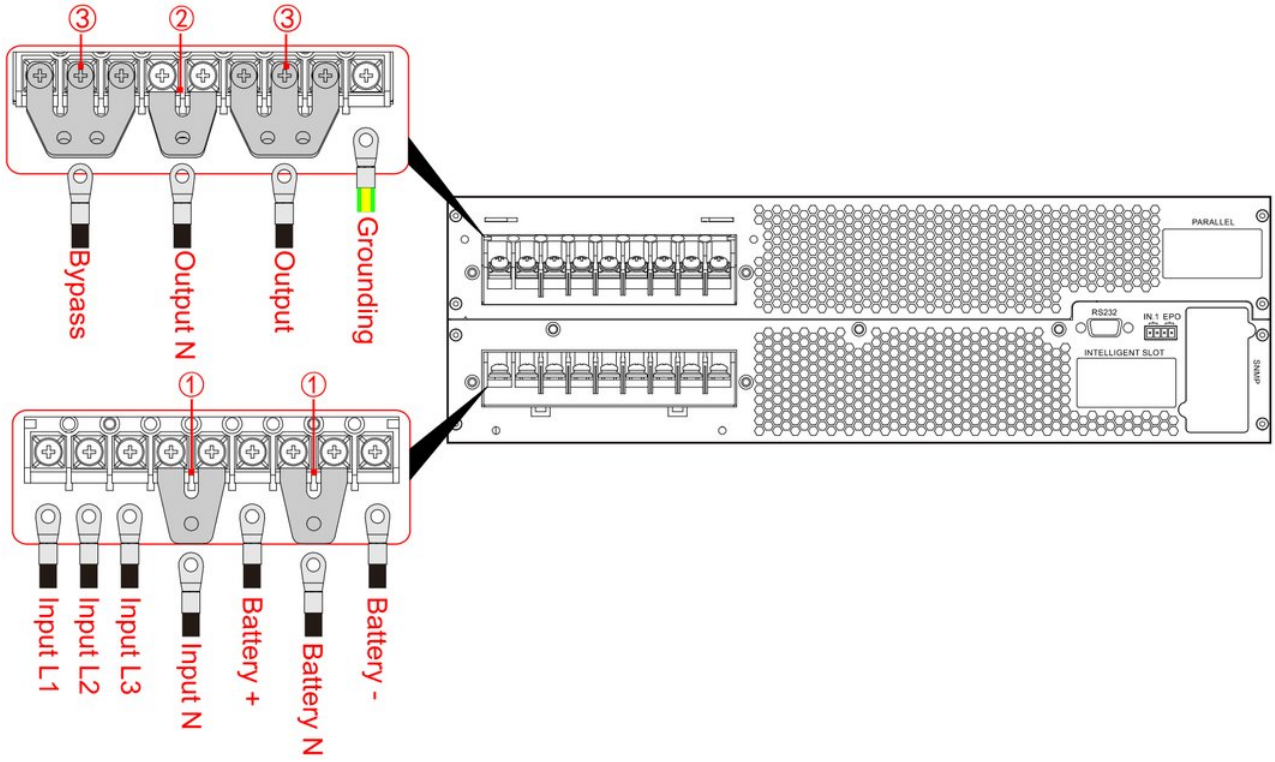

FIGURE 3-10 Wiring in 31 mode, 10 kVA and 20 kVA

11 MODE

Figure 3-11 shows the input and output wiring in 11 mode.

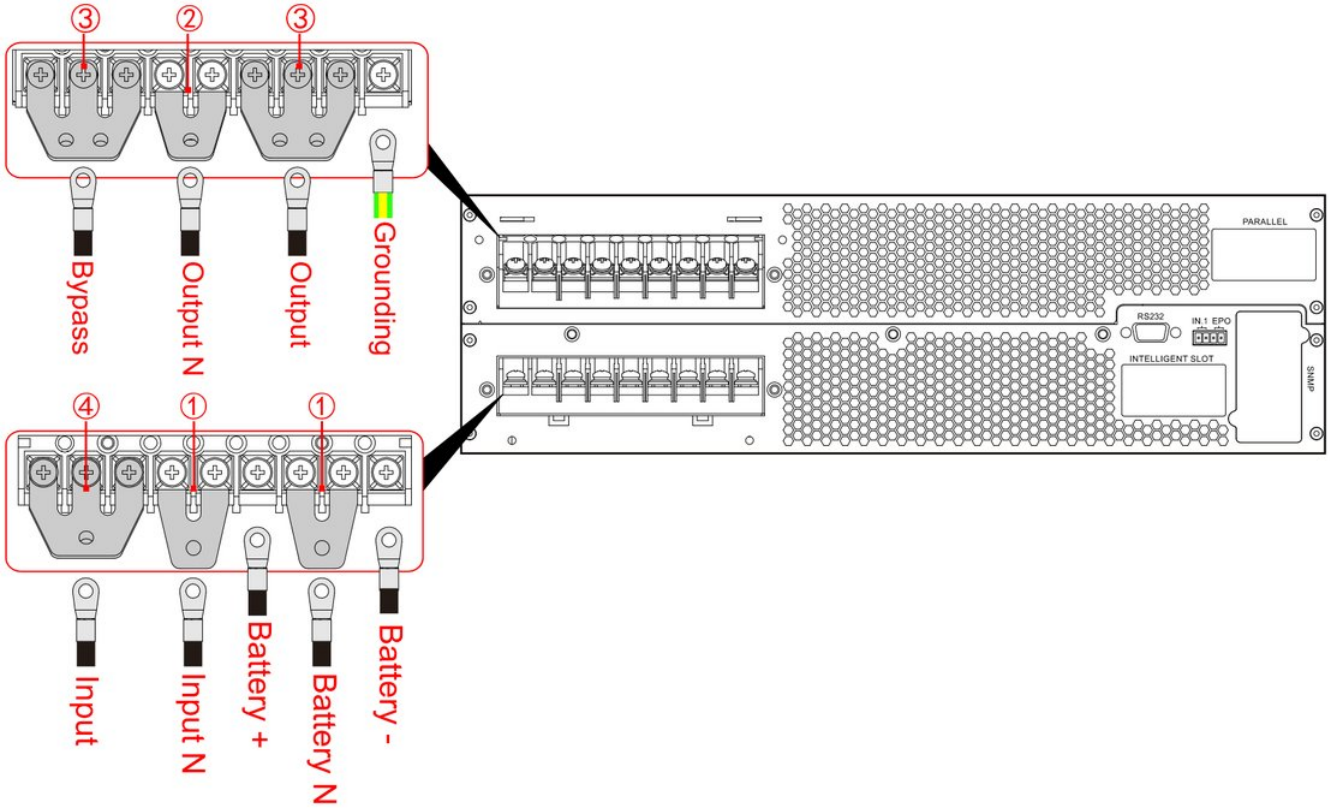

FIGURE 3-11 Wiring in 11 mode, 10 kVA and 20 kVA

3.4.2 Wiring of the 30 kVA and 40 kVA UPS

33 MODE

Figure 3-12 shows the input and output wiring in 33 mode. The input and the output each have two neutral terminal bars, connected in parallel; in 33 mode a single neutral cable can go to either bar.

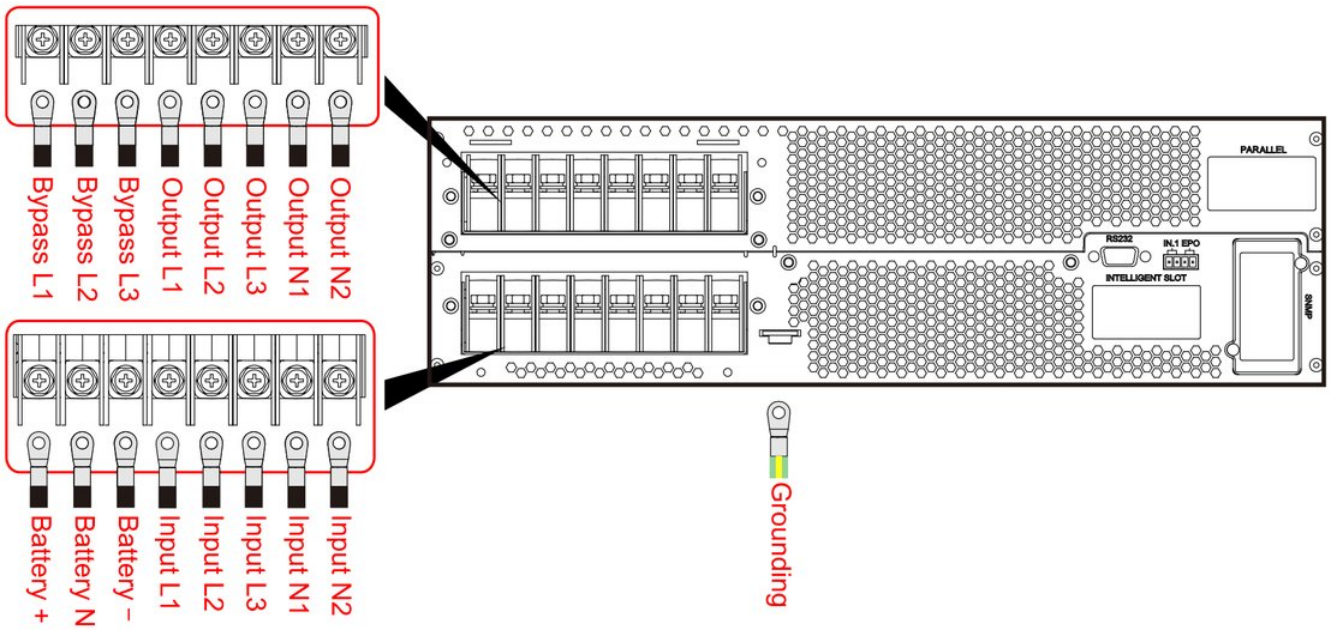

FIGURE 3-12 Wiring in 33 mode, 30 kVA and 40 kVA

31 MODE

Fit the pair of connector jumpers ① to the UPS terminals. Figure 3-13 shows the wiring in 31 mode. When the output and input neutrals each use two cables in parallel, connect one cable to each neutral bar.

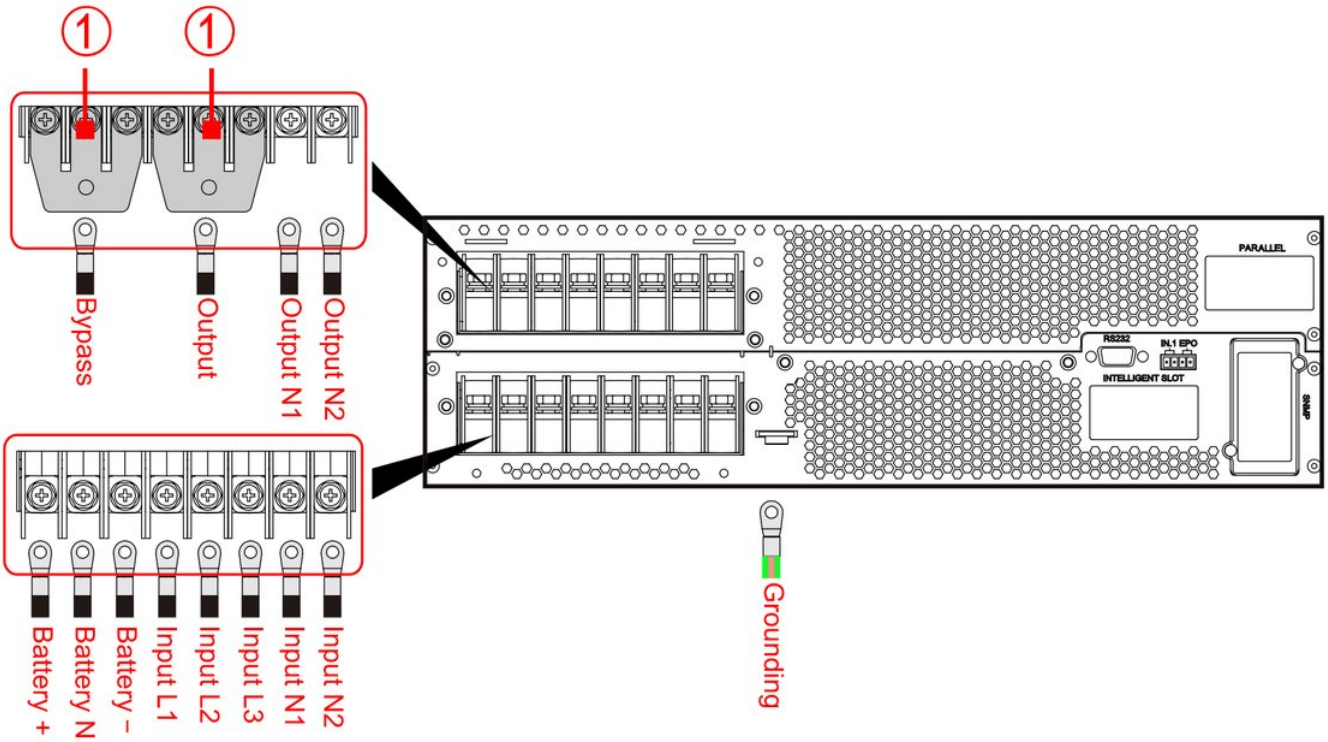

FIGURE 3-13 Wiring in 31 mode, 30 kVA and 40 kVA

3.4.3 Battery Box Connection

> **CAUTION**
>
> A DC battery breaker must be fitted between the battery and the UPS.

3.4.4 Battery Boxes with the 10 kVA and 20 kVA UPS

> **NOTE**
>
> Battery boxes connect in parallel in the same way on every model; the example shows the 20 kVA.

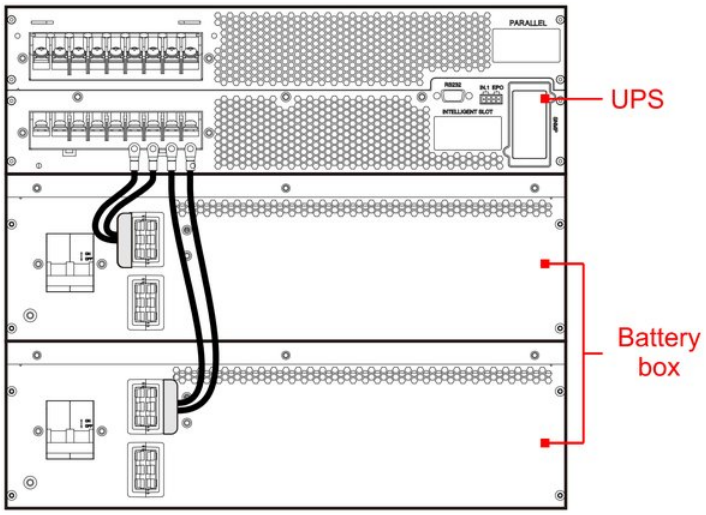

FIGURE 3-14 UPS with two battery boxes

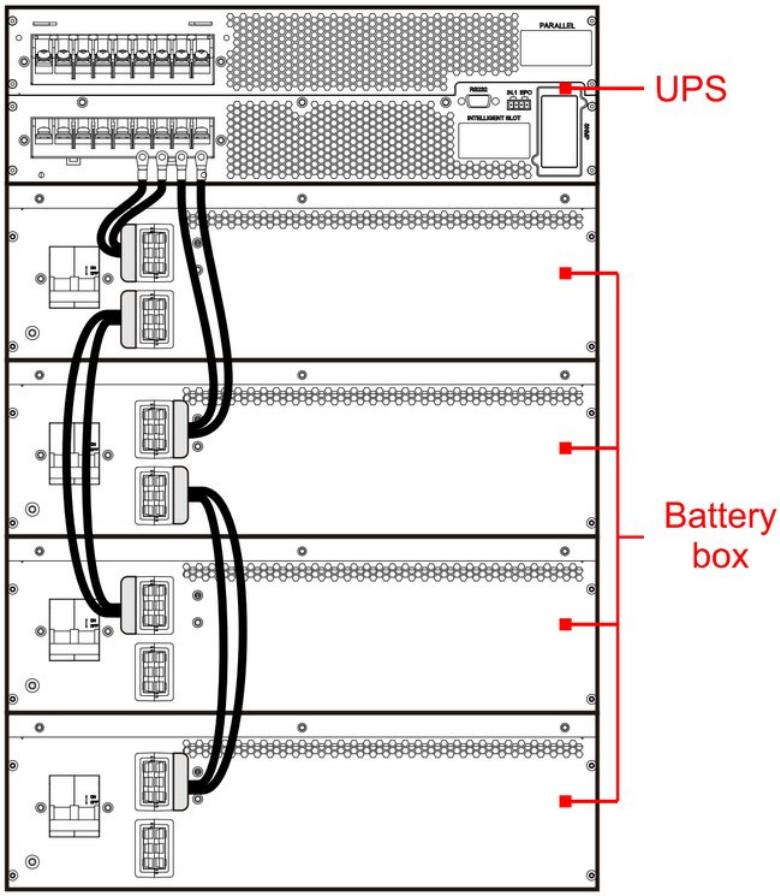

FIGURE 3-15 UPS with two sets of battery boxes in parallel (two boxes per set)

⚠ WARNING

Wire the UPS and the battery boxes exactly as in Figure 3-14 and Figure 3-15, to avoid wrong connections or short circuits.

3.4.5 Battery Boxes with the 30 kVA and 40 kVA UPS

> **NOTE**
> Battery boxes connect in parallel in the same way on every model; the example shows the 40 kVA.

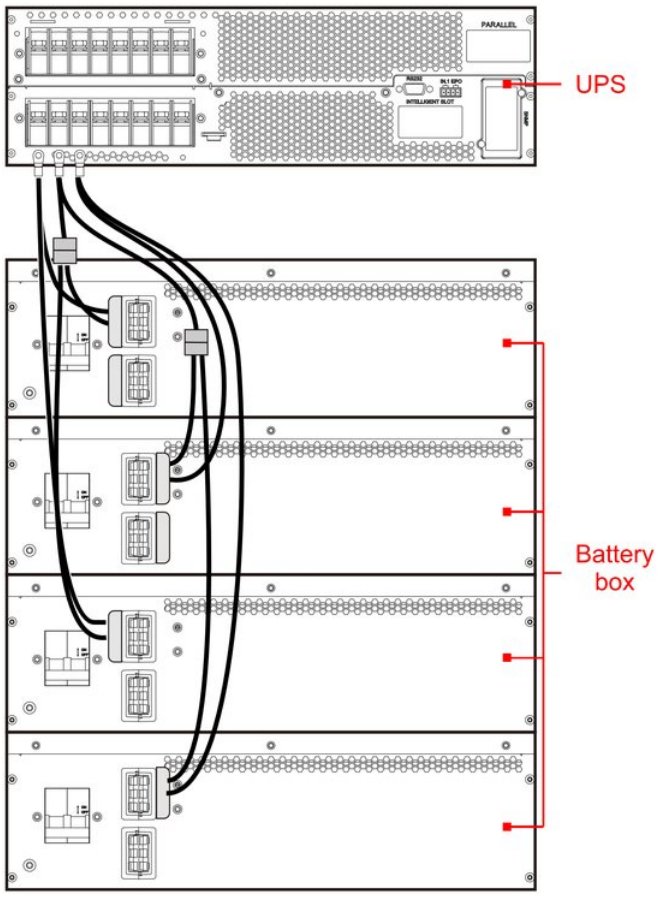

FIGURE 3-16 UPS with two sets of battery boxes in parallel (two boxes per set)

> **WARNING**
> Wire the UPS and the battery boxes exactly as in Figure 3-16, to avoid wrong connections or short circuits.

EXTERNAL BATTERIES

To connect your own external batteries, wire them as follows.

The battery input takes a positive and a negative battery string (by default 16 blocks in each). Figure 3-17 shows one arrangement: one battery cabinet with 32 blocks and one 3-pole breaker, wired to BATT.+, BATT.- and the battery neutral (BATN). For the battery cables and breaker, see Table 3-2 to Table 3-5.

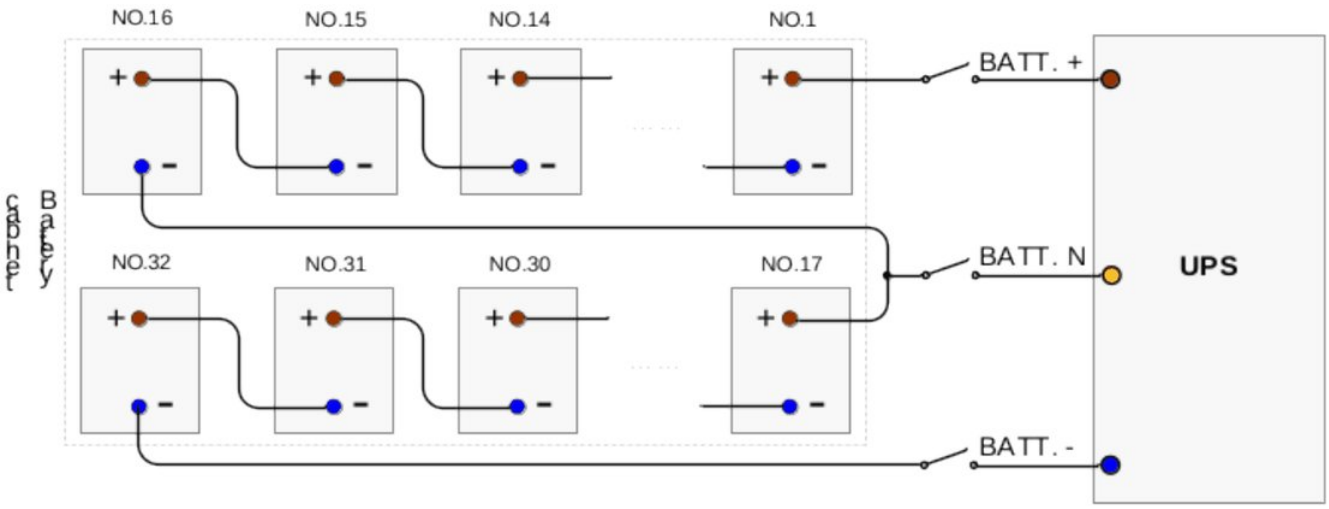

FIGURE 3-17 External batteries

3.4.6 Backfeed Protection

Backfeed protection is available with the AEC distribution module fitted with a backfeed protection contactor. Figure 3-18 shows the wiring.

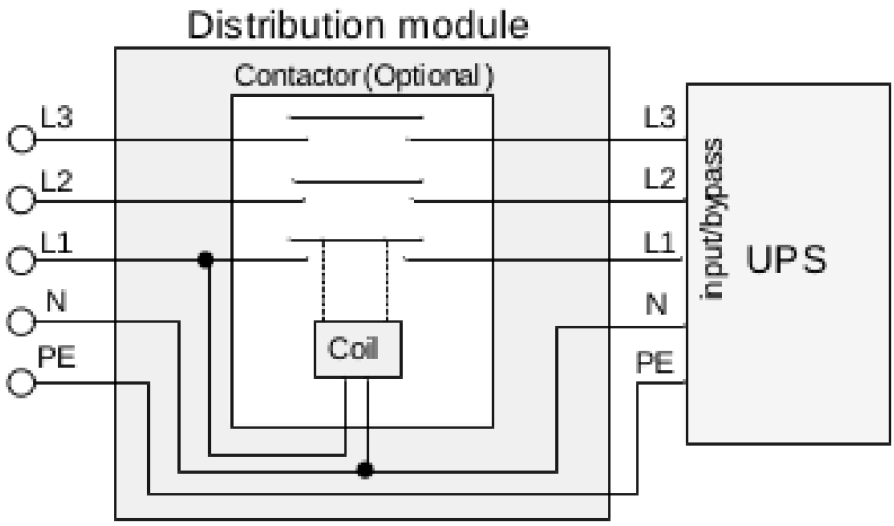

FIGURE 3-18 System wiring with backfeed protection

> **NOTE**
> Alternatively, fit a backfeed protection contactor yourself between the distribution board and the UPS, and label it (or any similar backfeed device) with a "risk of voltage backfeed" warning. The rated current of the contactor must be higher than the rated operating current of the UPS.

3.4.7 Distribution Module with the 10 kVA and 20 kVA UPS

Figure 3-19, Figure 3-20 and Figure 3-21 show the wiring between the UPS and the distribution module.

> **NOTE**
> The distribution module comes with its own connection cables (AC INPUT, BYPASS, AC OUTPUT), connected one-to-one to the UPS. The jumpers fitted on the UPS must therefore be moved to the input terminals of the distribution module. For example, in 31 mode the jumpers on the UPS (3-pin jumpers of BYPASS and AC OUTPUT, 2-pin jumpers of input N and output N) are moved to the terminal bar of the distribution module, whose UPS terminals are then connected one-to-one to the UPS.

33 MODE

Connect the UPS and the distribution module as shown.

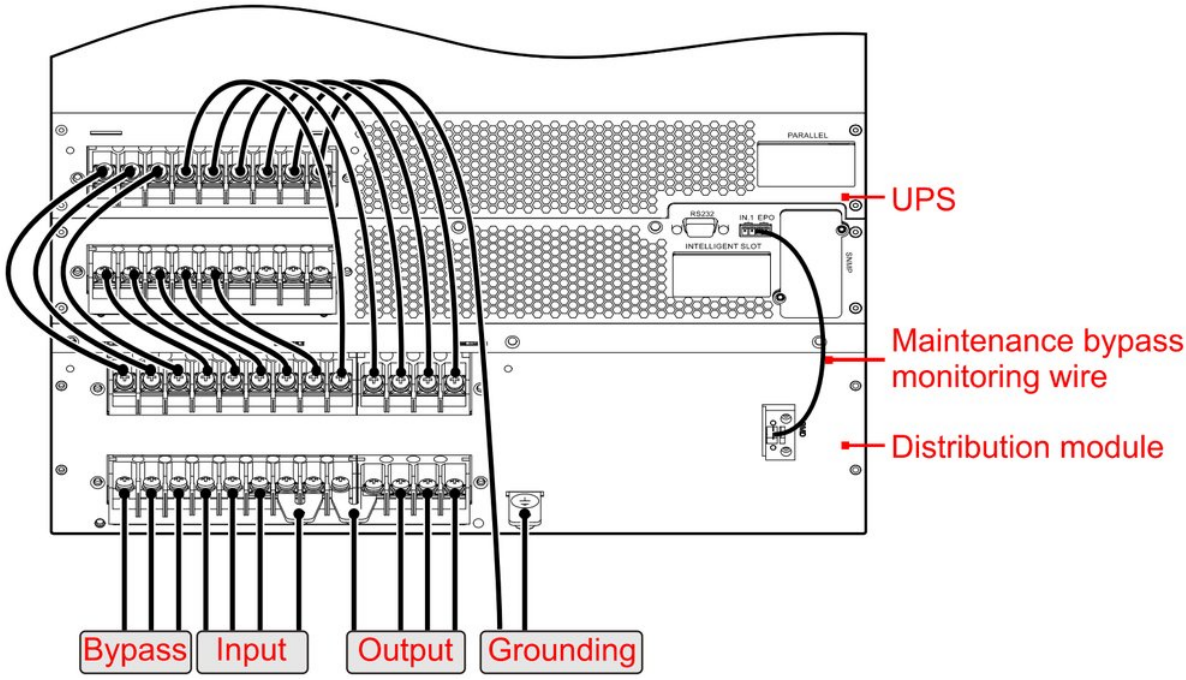

FIGURE 3-19 UPS and distribution module in 33 mode, 10 kVA and 20 kVA

31 MODE

Fit the jumpers of Table 2-5 to the 3-pole terminal bars of the bypass and the output, then connect the UPS and the distribution module as shown.

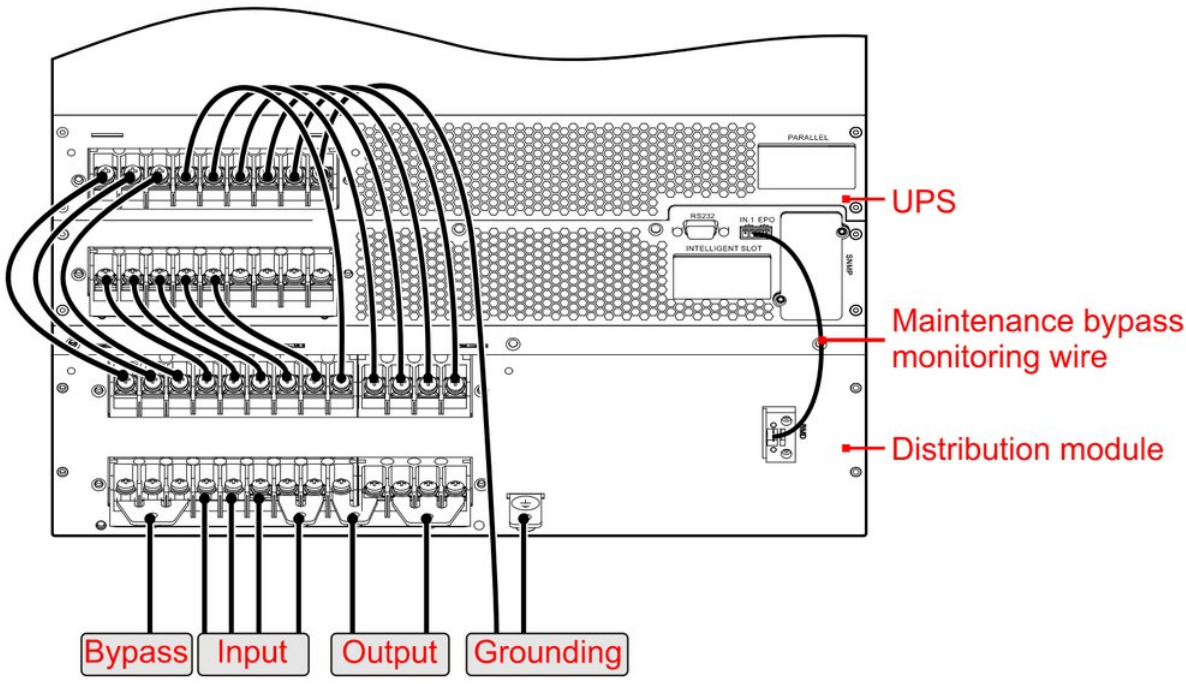

FIGURE 3-20 UPS and distribution module in 31 mode, 10 kVA and 20 kVA

11 MODE

Fit the jumpers of Table 2-5 to the 3-pole terminal bars of the mains, the bypass and the output, then connect the UPS and the distribution module as shown.

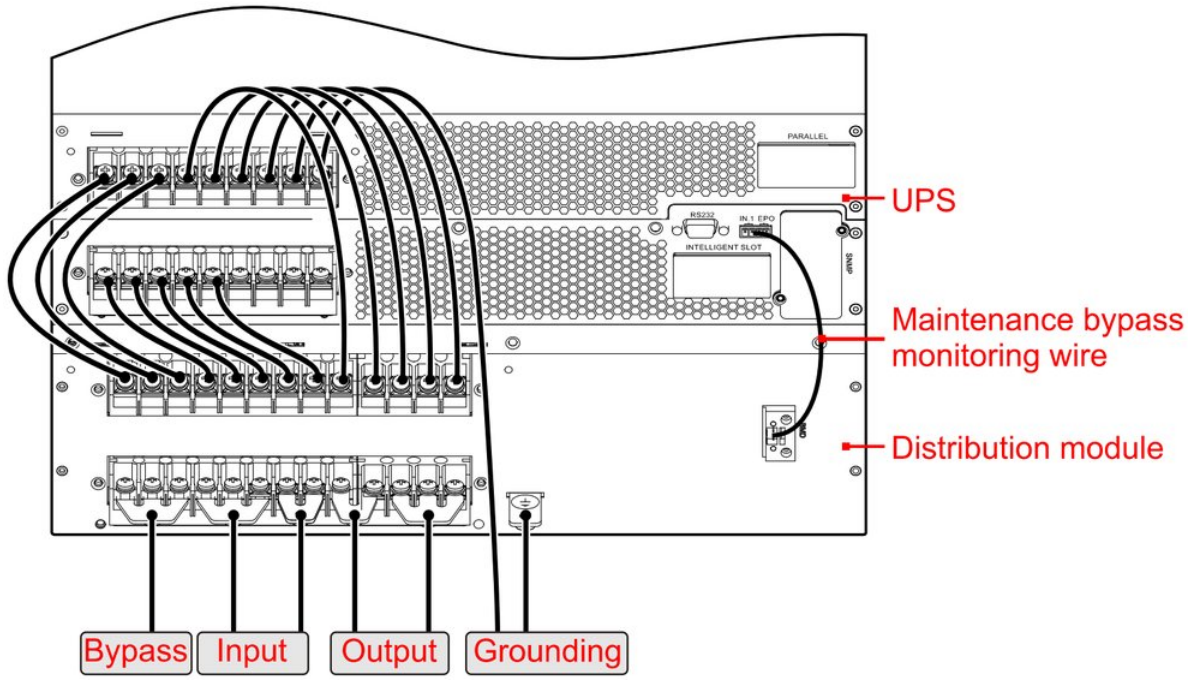

FIGURE 3-21 UPS and distribution module in 11 mode, 10 kVA and 20 kVA

⚠ CAUTION

Check that all cables are connected correctly and tightly, then refit the wiring cover (procedure below).

3.4.8 Distribution Module with the 30 kVA and 40 kVA UPS

Figure 3-22 and Figure 3-23 show the wiring between the UPS and the distribution module.

NOTE

The distribution module comes with its own connection cables (AC INPUT, BYPASS, AC OUTPUT), connected one-to-one to the UPS. The jumpers fitted on the UPS must therefore be moved to the input terminals of the distribution module. For example, in 31 mode the 3-pin jumpers of BYPASS and AC OUTPUT on the UPS are moved to the terminal bar of the distribution module, whose UPS terminals are then connected one-to- one to the UPS.

33 MODE

Connect the UPS and the distribution module as shown.

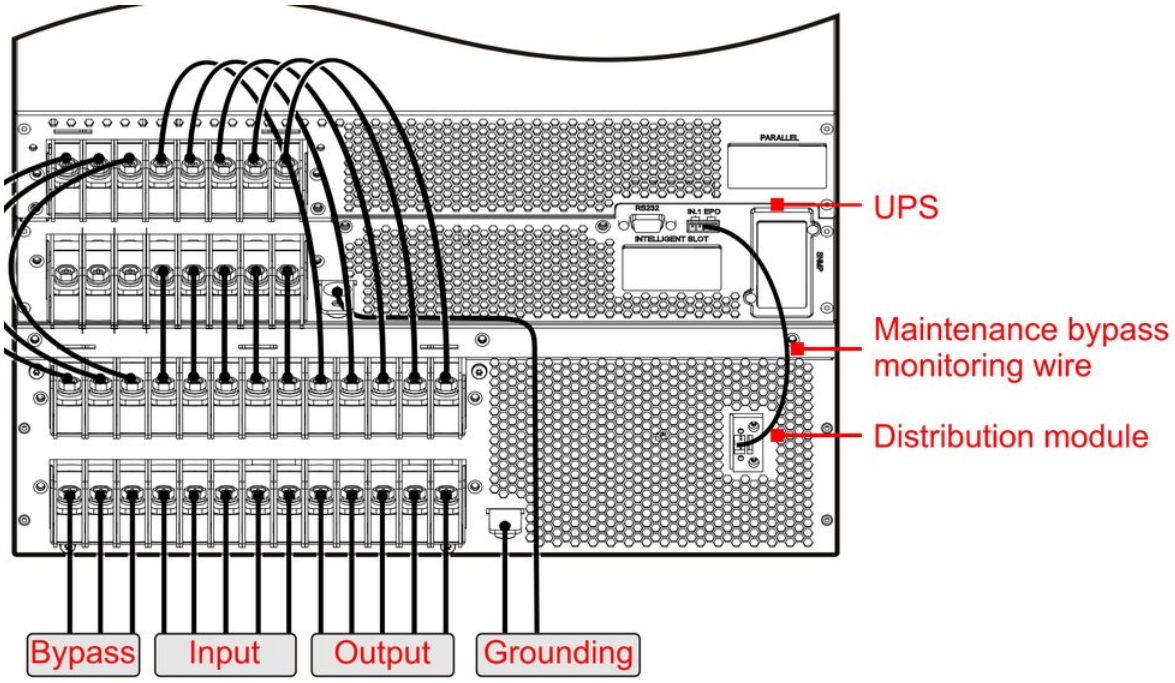

FIGURE 3-22 UPS and distribution module in 33 mode, 30 kVA and 40 kVA

31 MODE

Fit jumper ① of Table 2-6 to the 3-pole terminal bars of the bypass and the output, then connect the UPS and the distribution module as shown.

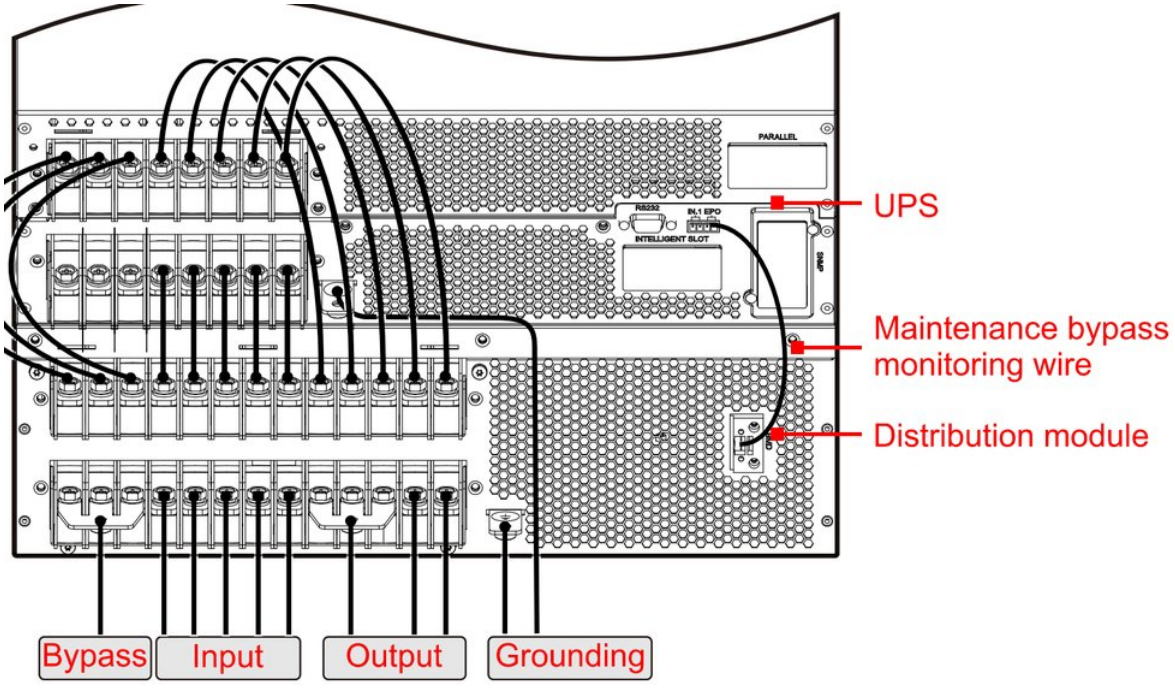

FIGURE 3-23 UPS and distribution module in 31 mode, 30 kVA and 40 kVA

⚠ CAUTION

Check that all cables are connected correctly and tightly, then refit the wiring cover (procedure below).

WIRING COVER

> **NOTE**
> The wiring cover is fitted the same way on the UPS and the distribution module in every mode; the example shows the 40 kVA.

PROCEDURE

1. Before wiring, remove the countersunk screws of the wiring cover, as shown in Figure 3-24.

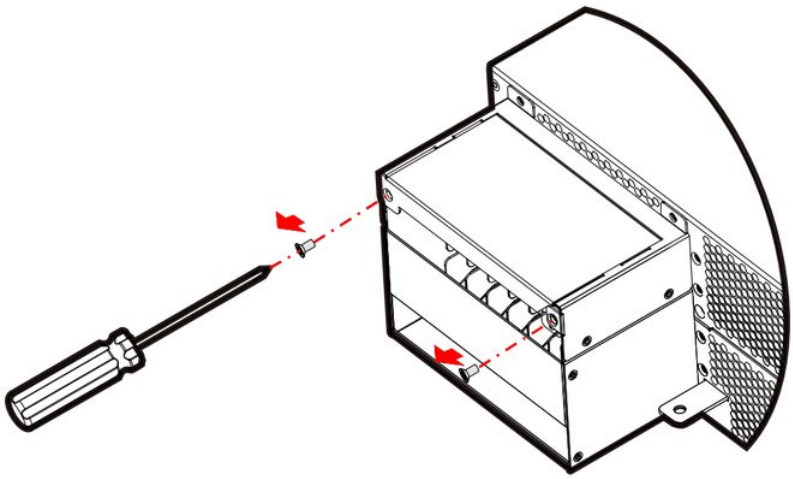

FIGURE 3-24 Removing the screws of the wiring cover

2. Remove the wiring cover, as shown in Figure 3-25.

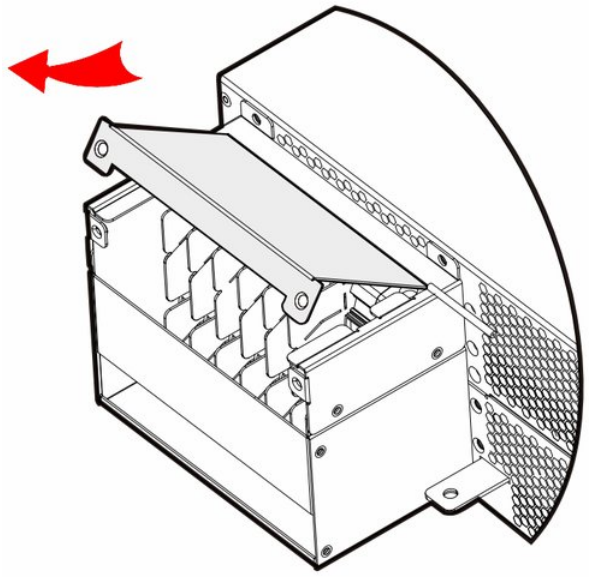

FIGURE 3-25 Removing the wiring cover

3. Connect the cables as described in 3.4.1 Wiring of the 10 kVA and 20 kVA UPS (Figure 3-26).

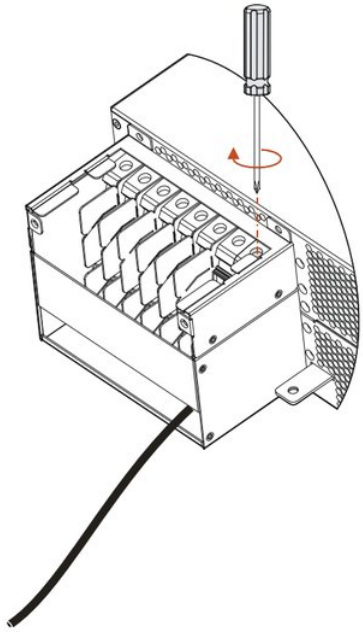

FIGURE 3-26 Connecting the cables

4 Refit the wiring cover in its place, as shown in Figure 3-27.

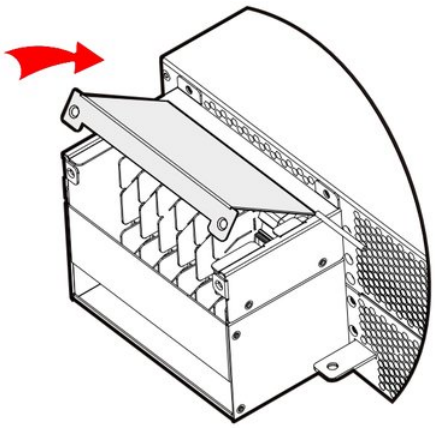

FIGURE 3-27 Refitting the wiring cover

5 Fix it with the countersunk screws, as shown in Figure 3-28.

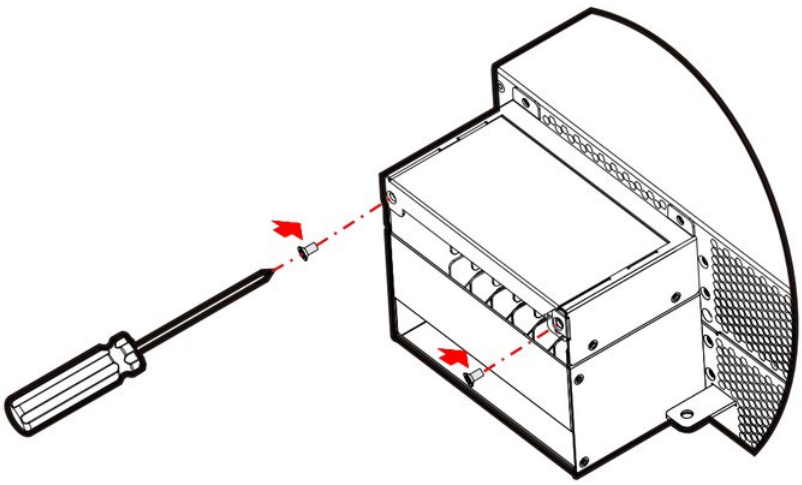

FIGURE 3-28 Fixing the screws

3.4.9 Parallel System Wiring

PROCEDURE

1. Install the UPS units and batteries of the parallel system as described in 3.3 Mechanical Installation.
2. Connect the input, output, battery and earth cables of the parallel system as in Figure 3-29 to Figure 3-33.

- 10 kVA and 20 kVA

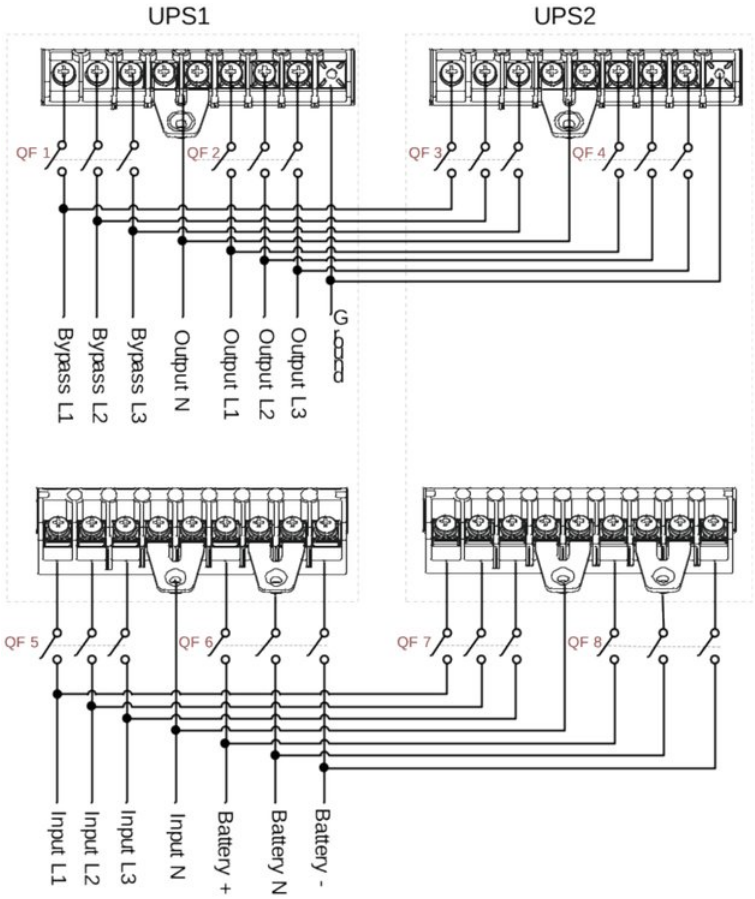

FIGURE 3-29 Parallel system in 33 mode, 10 kVA and 20 kVA

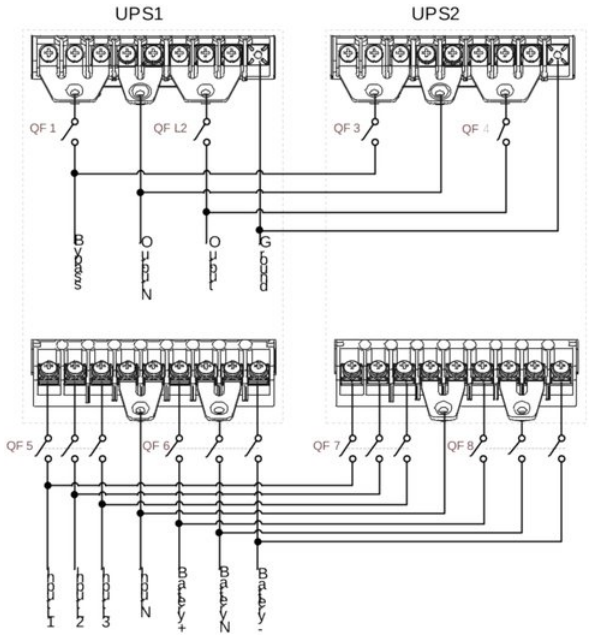

FIGURE 3-30 Parallel system in 31 mode, 10 kVA and 20 kVA

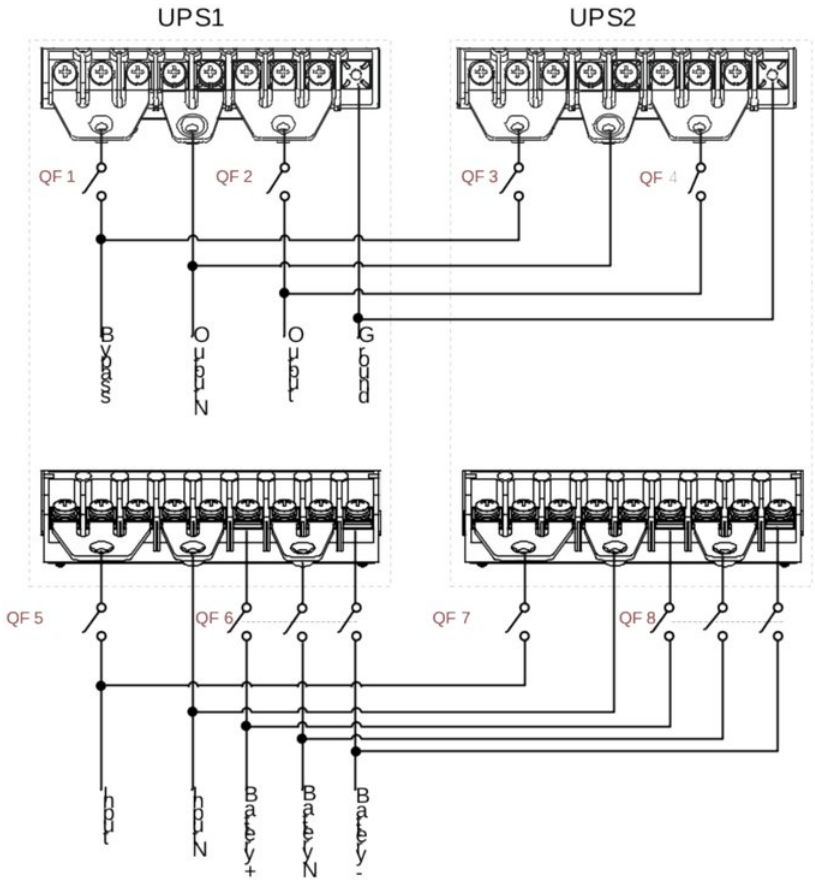

FIGURE 3-31 Parallel system in 11 mode, 10 kVA and 20 kVA

- 30 kVA and 40 kVA

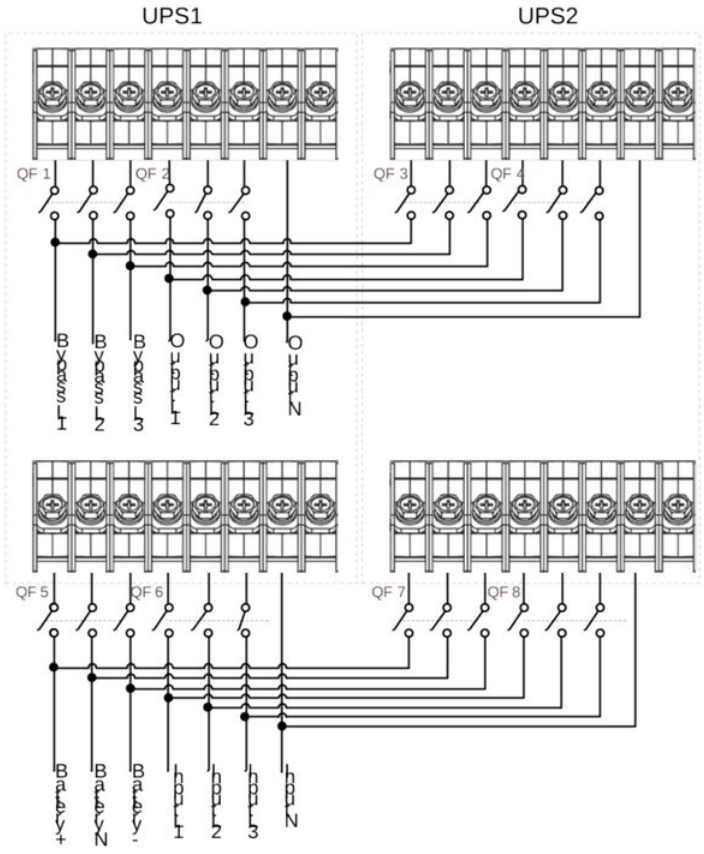

FIGURE 3-32 Parallel system in 33 mode, 30 kVA and 40 kVA

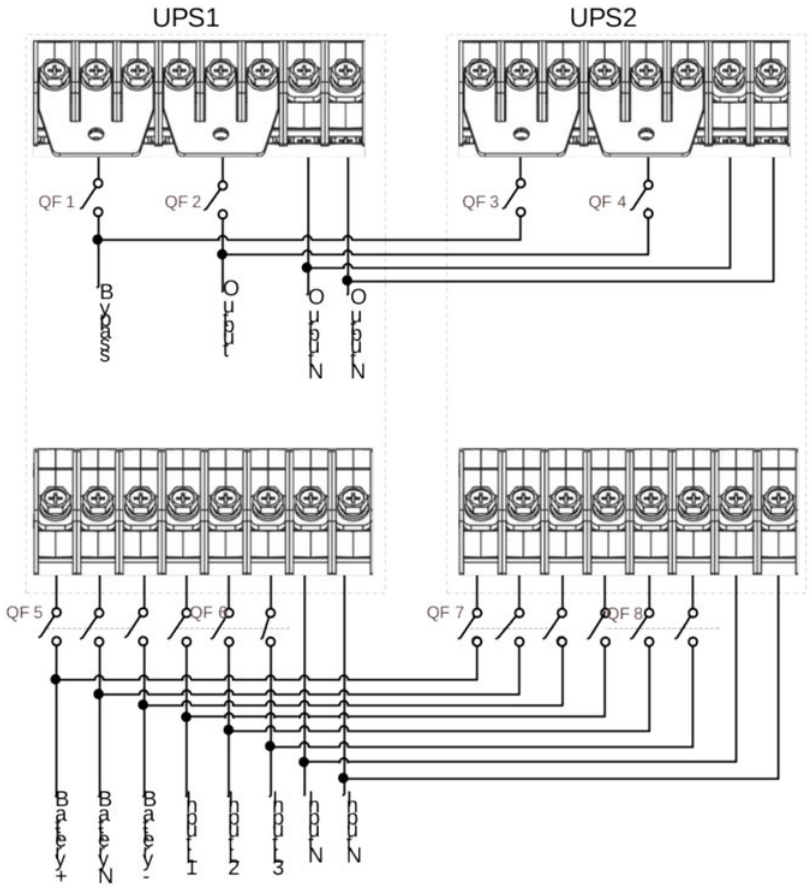

FIGURE 3-33 Parallel system in 31 mode, 30 kVA and 40 kVA

3 Connect the parallel ports of the units with the parallel cables, as shown in Figure 3-34.

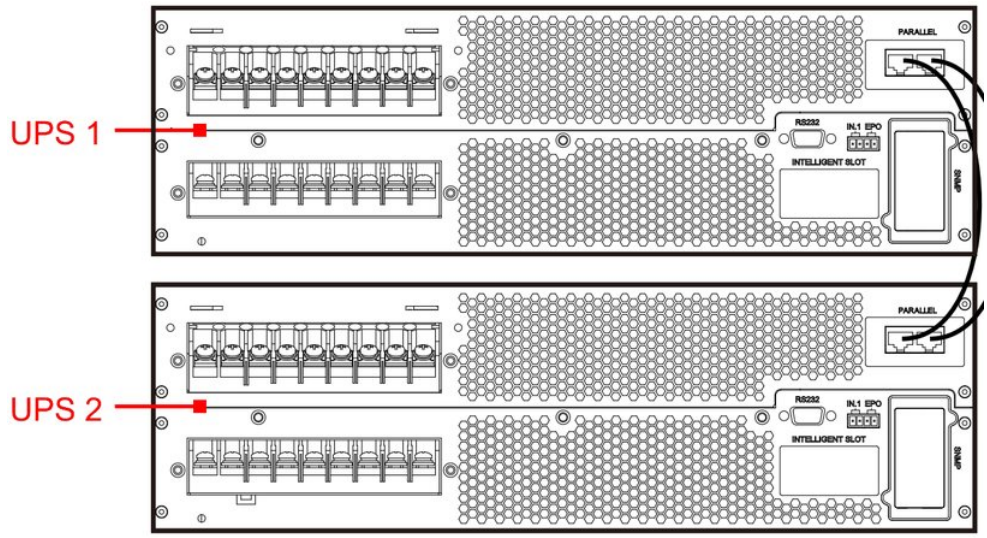

FIGURE 3-34 Parallel cables

NOTE

1. The parallel ports are wired the same way on every model; the figure shows the 30 kVA. 2. The output distribution of a parallel system is provided by the user.

CAUTION

1. The wiring and phase sequence of all units of the parallel system must be identical, so that the bypass supplies of the units are in phase.
2. The units of a parallel system can share battery strings, but every UPS must be set to the same number of batteries.
3. Connect the parallel ports of the units with the shielded communication cables supplied. The two RJ45 parallel ports are identical and back each other up for reliability: if one is not connected, the UPS gives an alarm.

CHAPTER 4

04 Touch Screen Operation

The touch screen shows the input, output, load and battery values, the UPS status and the alarms, and gives access to the settings. The event log helps fault diagnosis.

IN THIS CHAPTER

4.1 Menu Structure
4.2 First Switch-on
4.3 Home Page
4.4 Operating Status Display
4.5 Real-time Monitor
4.6 History
4.7 Project Management
4.8 More

4.1 Menu Structure

Figure 4-1 shows the menu structure.

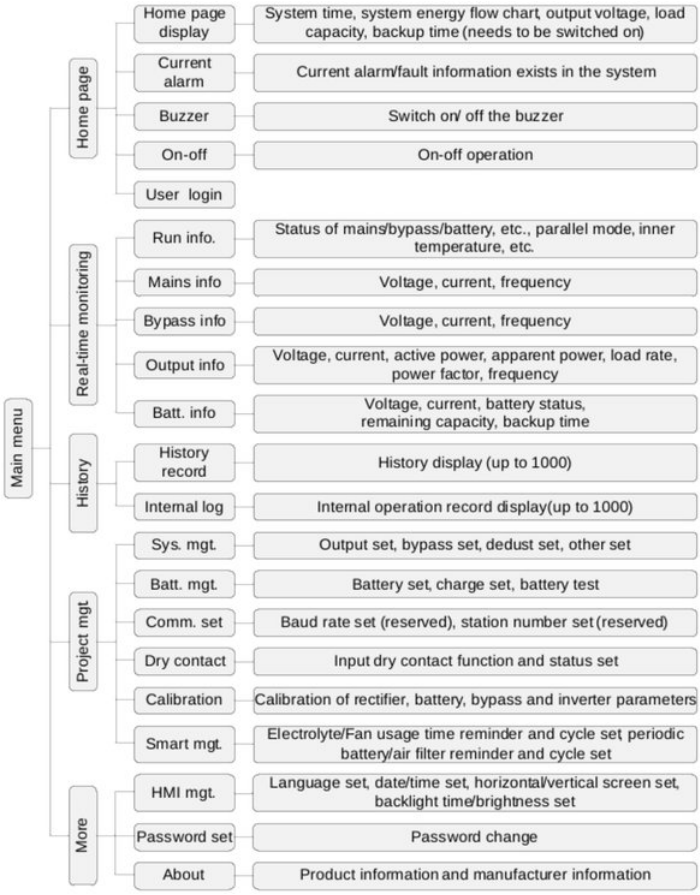

FIGURE 4-1 Menu structure

WARNING

The touch screen contains parameters that affect the operation of the UPS. Settings and parameter changes must be made by qualified personnel. If the meaning of a parameter is unclear, refer to this manual or ask AEC technical service. Do not change settings without authorisation.

> **NOTE**
> Values and other details in the screen pictures of this chapter are for illustration only; the touch screen of the product is the reference.

4.2 First Switch-on

When the system is powered, the welcome page appears (Figure 4-2).



FIGURE 4-2 Welcome page

Button and touch screen: quick guide

One ON/OFF button on the front panel starts and stops the UPS; everything else is on the touch screen.

QUICK GUIDE **Start the UPS** Section 5.2

1	2	3
Breakers	ON/OFF (2–3 s)	Loads
Close the external mains, bypass and battery breakers	Tap the ON/OFF icon on the home page, or hold the ON/OFF button	After about 10 s, switch on the loads, largest first

QUICK GUIDE **Shut down the UPS** Section 5.3

1	2	3
Loads off	ON/OFF (2–3 s)	Breakers
Switch off the loads; let the UPS run 10 min without load	Tap the ON/OFF icon, or hold the ON/OFF button	Open the external battery, bypass and mains breakers

QUICK GUIDE **Start from the battery (no mains)** Table 2-1

1

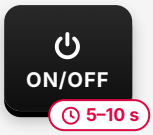

Press and hold the ON/OFF button: battery cold start

QUICK GUIDE **Log in and change a setting** Section 4.7

1



Home page: tap the login icon

2



Enter the user password (default 111111)

3

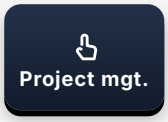

Tap the project management icon and open the page

4



Change the value and save

QUICK GUIDE **Mute the buzzer** Section 4.3

1



Tap the buzzer icon to mute or unmute

QUICK GUIDE **Go to maintenance bypass** Section 2.3.1

1



Remove the cover of the maintenance bypass breaker: the UPS transfers to bypass

2



Close the maintenance bypass breaker

3



Open the AC input, bypass and AC output breakers

4.3 Home Page

After initialisation the touch screen shows the home page (Figure 4-3).

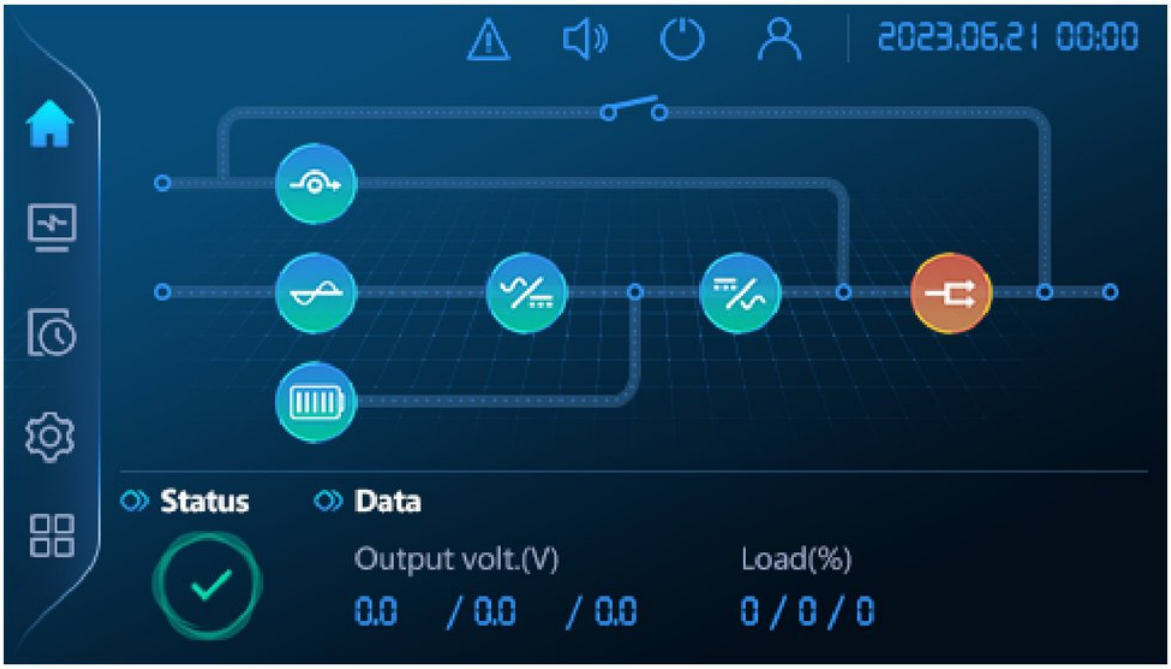

FIGURE 4-3 Home page

The home page gives an overview of the system. Its icons are:

: Home page. Tap it on any page to return to the home page.

: Real-time monitor. Tap it to open the real-time monitor page.

: History. Tap it to open the history page.

: Project management (settings). Tap it to open the project management page.

: More. Tap it to open the More page.

: Current alarms. When there is a fault, tap it to see the details.

: Buzzer. Tap it to mute or unmute the buzzer.

: Log in.

: ON/OFF.

: Bypass information. When bypass is abnormal, the icon lights up in red.

: Mains information. When mains is abnormal, the icon lights up in red.

: Output information. When output is abnormal, the icon lights up in red.

: Battery information. When battery is abnormal, the icon lights up in red.

4.4 Operating Status Display

The system can be in mains inverter output, battery inverter output, bypass output, ECO output or maintenance bypass output. Figure 4-4 to Figure 4-8 show the page for each.

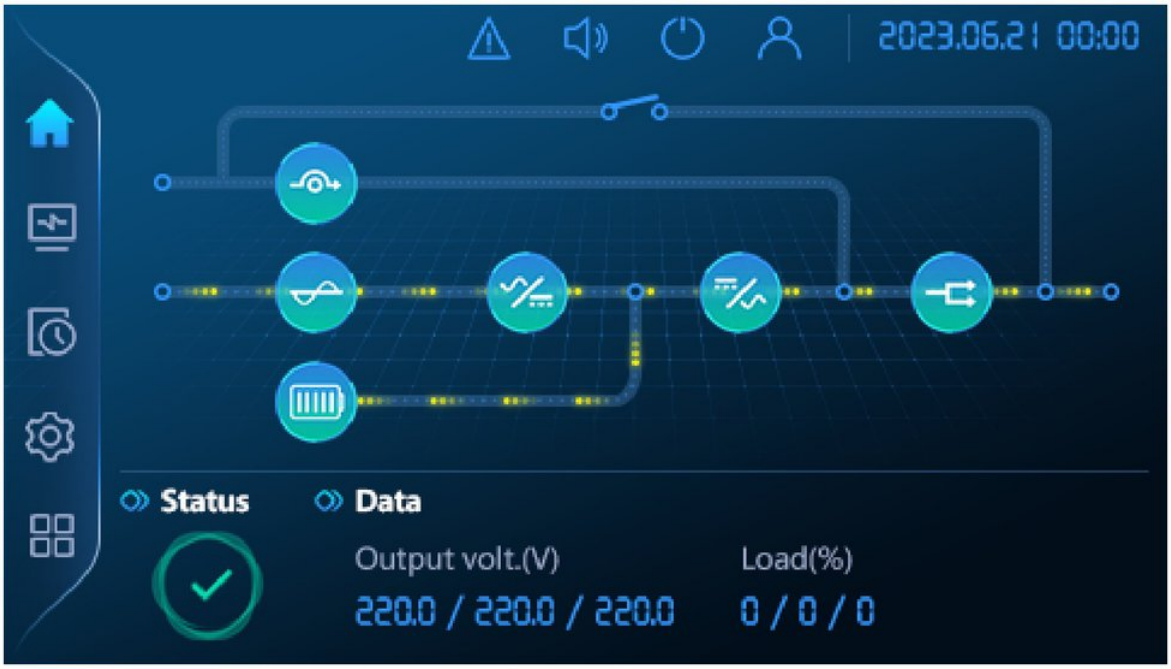

FIGURE 4-4 Mains inverter output

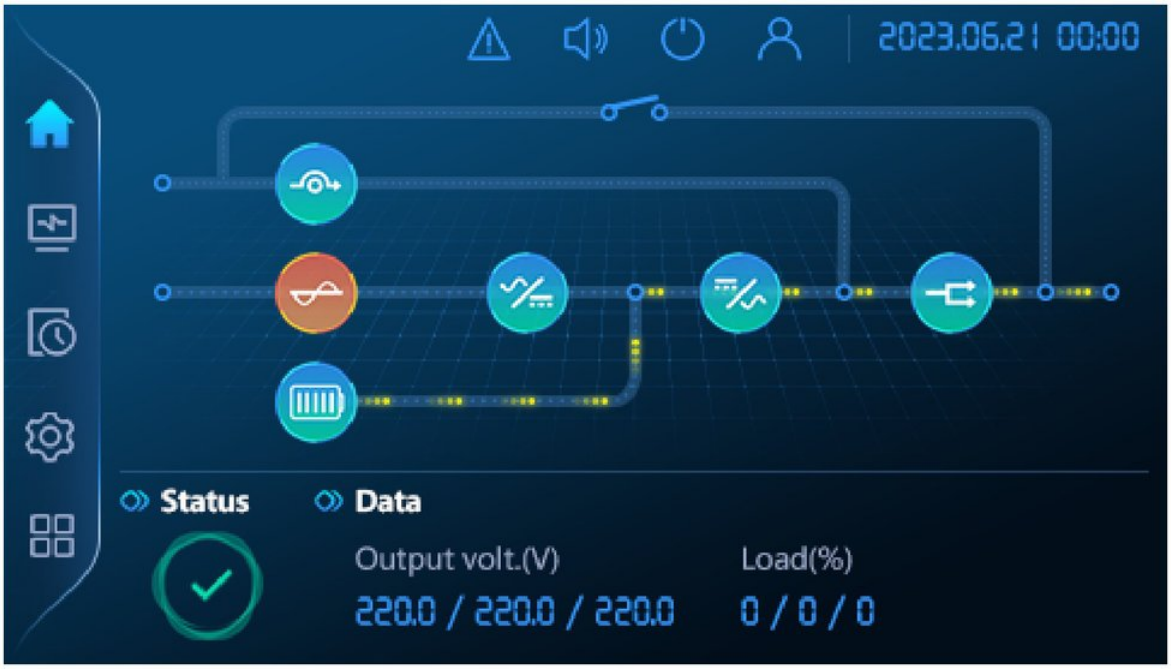

FIGURE 4-5 Battery inverter output

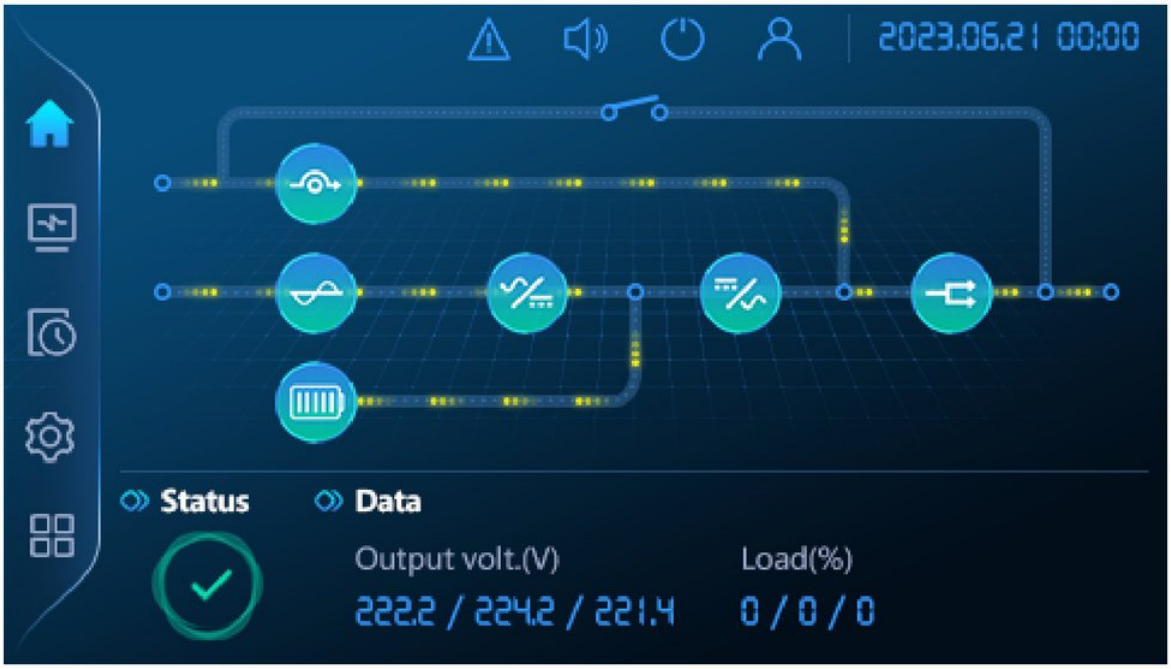

FIGURE 4-6 Bypass output

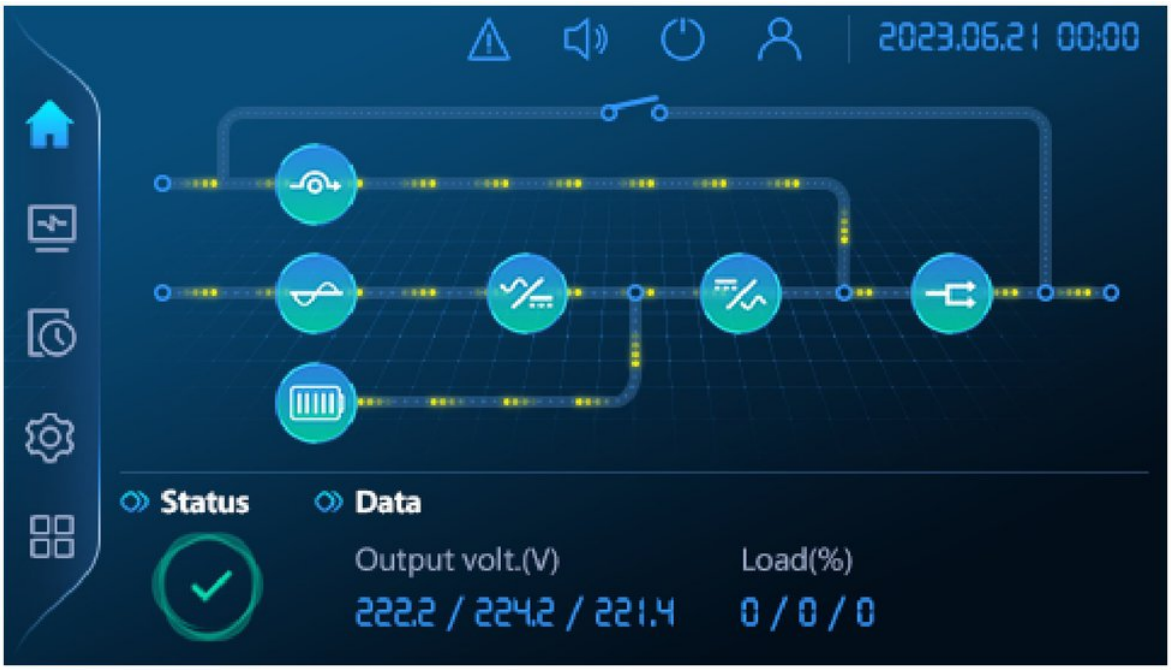

FIGURE 4-7 ECO output

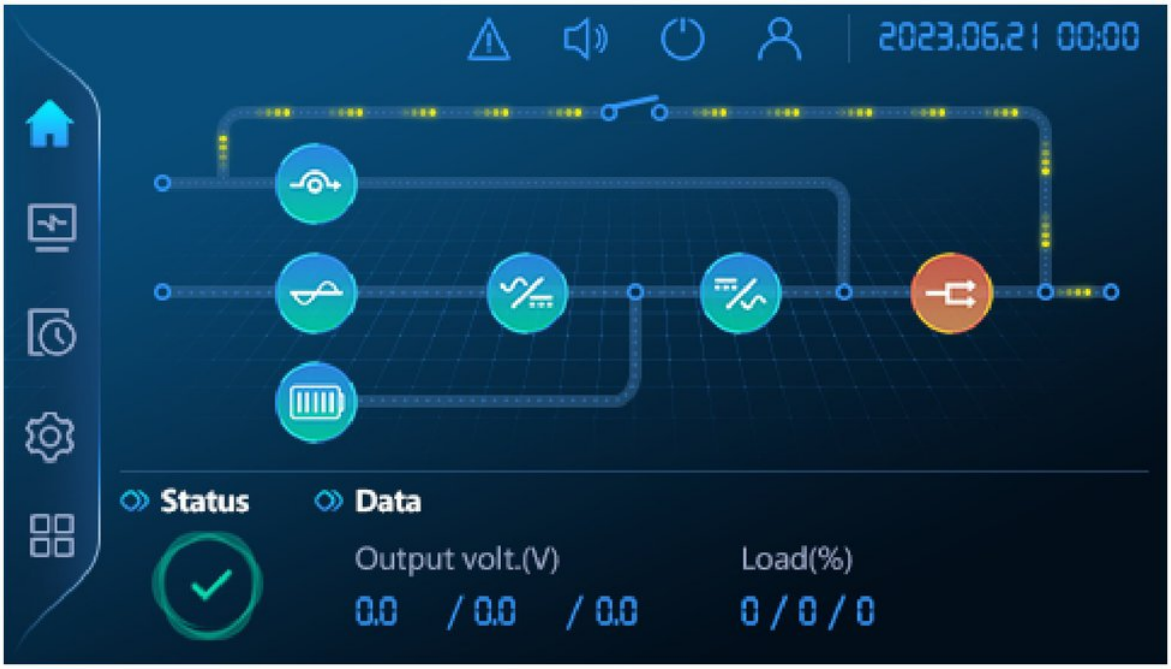

FIGURE 4-8 Maintenance bypass output

4.5 Real-time Monitor

On the home page, tap the icon to open the real-time monitor page (Figure 4-9). It shows the running, mains, bypass, output and battery information.

The mains, bypass, output and battery pages also open from the " , , , "icons on the home page. Each page shows:

Running information: status of mains, bypass, maintenance bypass, battery, rectifier, inverter, output, ECO, unit and fans; parallel mode and unit ID; internal and battery temperature; Modbus address and baud rate.

Mains information: voltage, current, frequency.

Bypass information: voltage, current, frequency.

Output information: voltage, current, active power, apparent power, load rate, power factor, frequency.

Battery information: voltage of the positive and negative strings, charge/discharge current, battery status, remaining capacity and backup time.

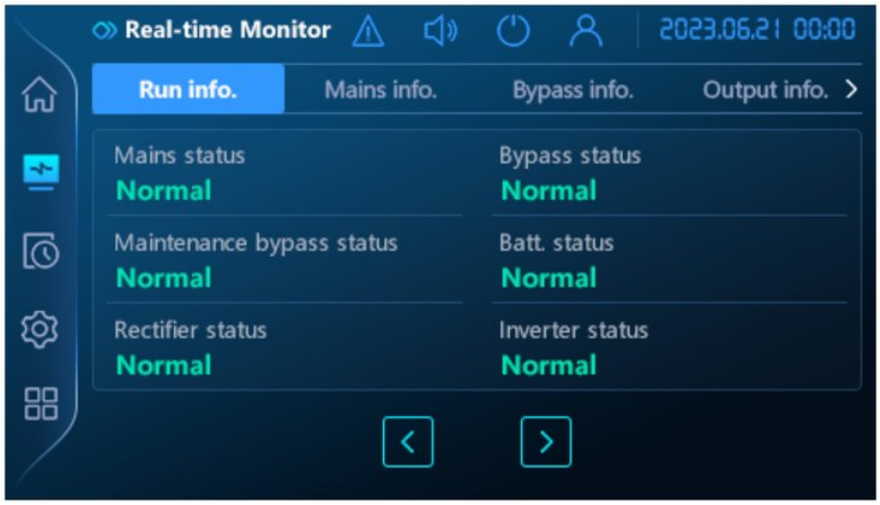

FIGURE 4-9 Real-time monitor page

4.6 History

On the home page, tap icon to open the history page (Figure 4-10), then tap to view the UPS history.

CAUTION

The history holds up to 1000 records; beyond that, the oldest record is overwritten. Records are listed newest first.

The internal logs are visible at customer-service level only (AEC technical service).

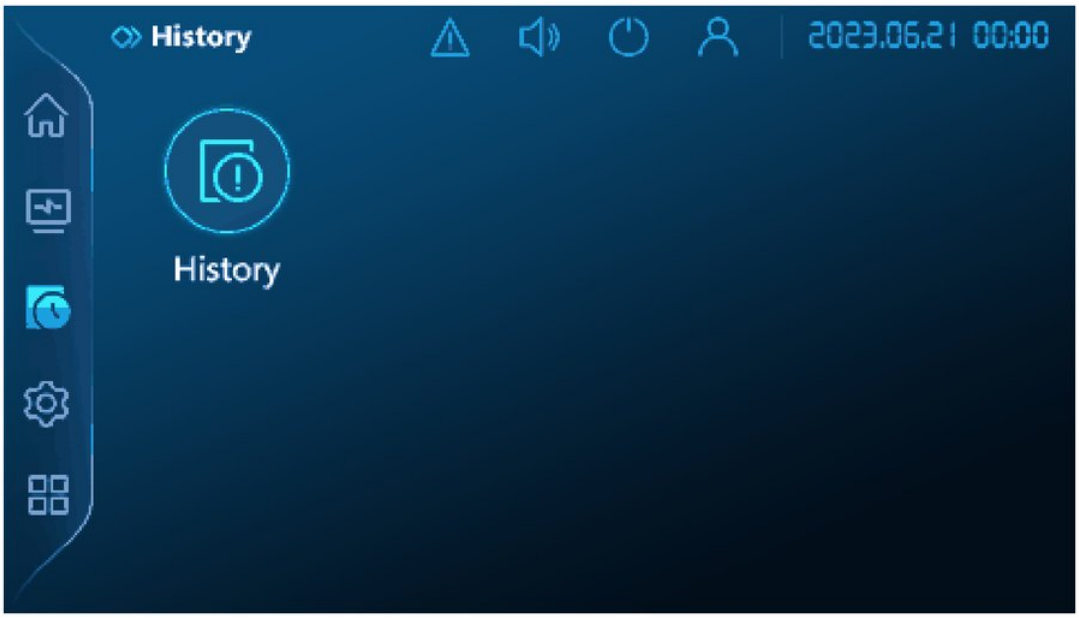

FIGURE 4-10 History page

4.7 Project Management

NOTE

Log in before opening project management; each password gives a different level of access. The default user password is 111111. At user level you can set system management, battery management, communication and dry contacts. The customer-service level adds parameter calibration and smart management, which change important parameters: a wrong setting can stop the UPS from working properly, so these are reserved for AEC technical service. The customer-service password is held by AEC technical service. Passwords can be changed under More > HMI management > Password set.

On the home page, tap the icon and enter the password: the home page returns and the login icon changes to .

On the home page, tap icon to open the project management page. Table 4-1 to Table 4-6 describe the settings of each page.

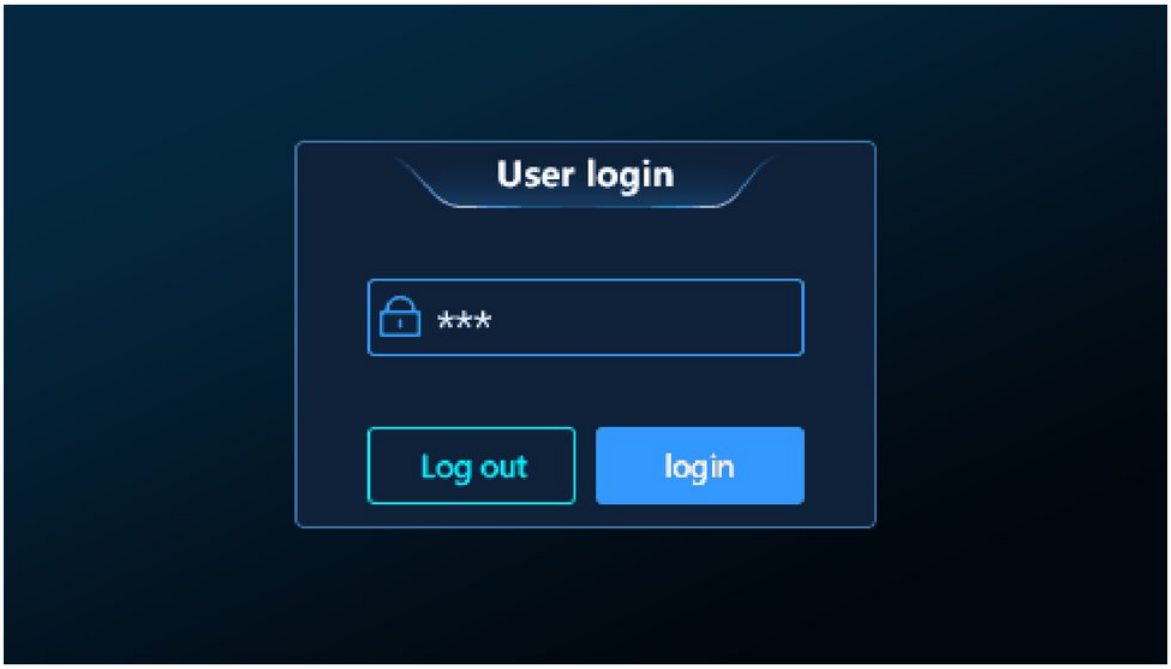

FIGURE 4-11 User login page



FIGURE 4-12 Project management page

TABLE 4-1 System management settings

Function page	Set item	Set value	Function instructions
Output set	Output volt.(V)	110, 115, 120, 220, 230, 240	-
	Output frequency (Hz)	50, 60	-
	Output voltage fine adjustment (V)	-5~+5	-
	Impact load mode	On, off	For loads with high inrush current (transformers, generators, etc.): prevents the magnetising current from damaging the UPS. See the description and start-up procedure after this table.
	Test load function	On, off	Load test (burn-in) function.
	Test load rate (%)	10~110	-
	Frequency converter mode	On, off	The output frequency is set freely; with this mode on there is no bypass, the inverter does not track the bypass, and there is no output if the inverter fails.
	Frequency converter frequency (Hz)	50, 60	-
	Short-circuit duration (ms)	10~200	How long the inverter holds an output short circuit before protecting itself.
Bypass set	Bypass voltage upper limit (%)	10, 15, 20	-
	Bypass voltage lower limit (%)	10, 15, 20	-
	Bypass frequency range (%)	5, 10	-
	ECO mode	On, off	Output through the bypass first
	ECO voltage range (%)	10, 15	-
	ECO frequency range (%)	5, 10	-
	Bypass output when off	On, off, force	Whether the load is supplied through the bypass when the UPS is off; "force" always supplies it through the bypass
	Bypass on output short circuit	On, off	In inverter mode: whether the output transfers to bypass when it is short-circuited

TABLE 4-1 System management settings *(continued)*

Function page	Set item	Set value	Function instructions
Dust removal	Dust removal	Standard, Timed, Periodic, Cancel	Standard: available below 50 % load; the fans run at full speed for 2.5 s every 2.5 s to blow out the dust, for 1 min. Timed: available below 50 % load; set the duration N as well; the fans run at full speed for 2.5 s every 2.5 s, for N min. Periodic: set the period as well; at the end of each period the fans run at full speed for 200 s, then the count starts again.
	Timed dust removal duration (min)	1~60	-
	Dust removal period (h)	1~720	-
Other	Auto-start when powered	On, off, Non-off	-
	EPO	NO, NC	-
	Phase sequence calibration	On, off	On: with a wrong mains phase sequence the UPS still supplies the load normally, without derating; the phase sequence alarm is still given, with a slow instead of a continuous beep.
	Generator mode	On, off	On: battery charging is disabled (for generator supply).
	Work mode	3/3, 3/1, 1/1	
	Model power (kW)	10, 20, 30, 40	-
	Battery disconnected alarm	On, off	-
	Rectifier delay start (s)	0~60	-

Inrush (impact) loads change suddenly, periodically or not, irregularly and transiently. The IST9 supports the common ones, such as transformers and generators. When a three-phase transformer is suddenly energised, a large magnetising current flows that can seriously damage the UPS.

Make sure the load is a supported one before connecting it. When the UPS output supplies a transformer, switch on "Impact load mode" as follows:

PROCEDURE

1. Open all the UPS breakers. Connect the transformer to the UPS output and check all the wiring.
2. Close the input breaker to power the UPS and wait until the screen is on and usable.
3. On the screen, set "Impact load mode" to On (tap "Sys. mgt.", then set "Impact load mode" to "On" on the "Output Set" page). Close the output breaker, then the bypass breaker.
4. Switch on the transformer.
5. Switch on the UPS.

> **NOTE**
> Only the 10 kVA and 20 kVA models can be set to 1/1. Model power is shown only and cannot be set.

TABLE 4-2 Battery management settings

Function page	Set item	Set value	Function instructions
Batt. set	Batt. type	Lead-acid, lithium	-
	Batt. capacity (Ah)	7~999	-
	Number of cells	±48, ±54, ±60, ±66, ±72, ±78, ±84, ±90, ±96, ±102, ±108, ±114, ±120	-
	Backup time display	On, off	-
	Batt. rest interval (days)	1~30	-
	Batt. rest delay (h)	0~48	-
	Batt. rest function	On, off	-
	Cell undervoltage protection (V/cell)	1.667~1.867	-
	Cell test end voltage (V/cell)	1.667~2.300	-
Charge set	Batt. charge current (A)	10 / 20 kVA: 1~10 30 / 40 kVA: 1~20	-
	Cell boost charge voltage (V/cell)	2.083~2.471	-
	Cell float voltage (V/cell)	2.083~2.333	-
	Temperature compensation	On, off	When on, set the compensation coefficient as well.
	Temperature compensation coefficient (mV/°C)	0~5	-
	Forced charging	On, off	On: forced (boost) charging starts
Batt. test	Battery test	Standard, Deep, Periodic, Cancel	Standard: with the UPS on, it runs on battery for 10 s, then returns to mains. Deep: the UPS runs on battery until the low-voltage alarm, then returns to mains. Periodic: set the test time as well; with the UPS on, it runs on battery and returns to mains when the set time has elapsed.
	Test period (min)	1~255	-

NOTE

Backup time display: if the system has a more accurate battery monitor, the UPS display of the remaining backup time can be switched off.

TABLE 4-3 Communication settings (reserved function)

Set item	Set value
Modbus baud rate (bit/s)	9600
Modbus address	1~255

TABLE 4-4 Dry-contact settings

Set item	Set value
Input dry contact 1	NC, NO
Dry contact type	External maint. bypass, Transformer overtemperature, Charging disabled, Discharging disabled

TABLE 4-5 Parameter calibration (customer-service level)

Calibration item	Calibration point
REC.	Mains phase-L1/L2/L3 voltage(V), L1/L2/L3-phase PFC current (A), BUS+/BUS- voltage (V)
Batt.	Positive/negative battery pack voltage (V), Battery pack+/pack-charge current(A)
Bypass	Bypass phase-L1/L2/L3 voltage(V)
Inverter	INV. phase-L1/L2/L3 voltage (V), Load phase-L1/L2/L3 current (A), L1/L2/L3-phase DC component 3/3 (mV), L2/L3-phase DC component 3/1 (mV)

TABLE 4-6 Smart management settings (customer-service level)

Set item	Set value
Electrolytic capacitor service reminder	On, off
Reminder interval (months)	1~84
Fan service reminder	On, off
Reminder interval (months)	1~84
Battery replacement reminder	On, off
Reminder interval (months)	1~120
Dust filter cleaning reminder	On, off
Reminder interval (months)	1~12
Password reset	Confirm, cancel

4.8 More

On the home page, tap the icon to open the More page (Figure 4-13). Table 4-7 describes its settings.

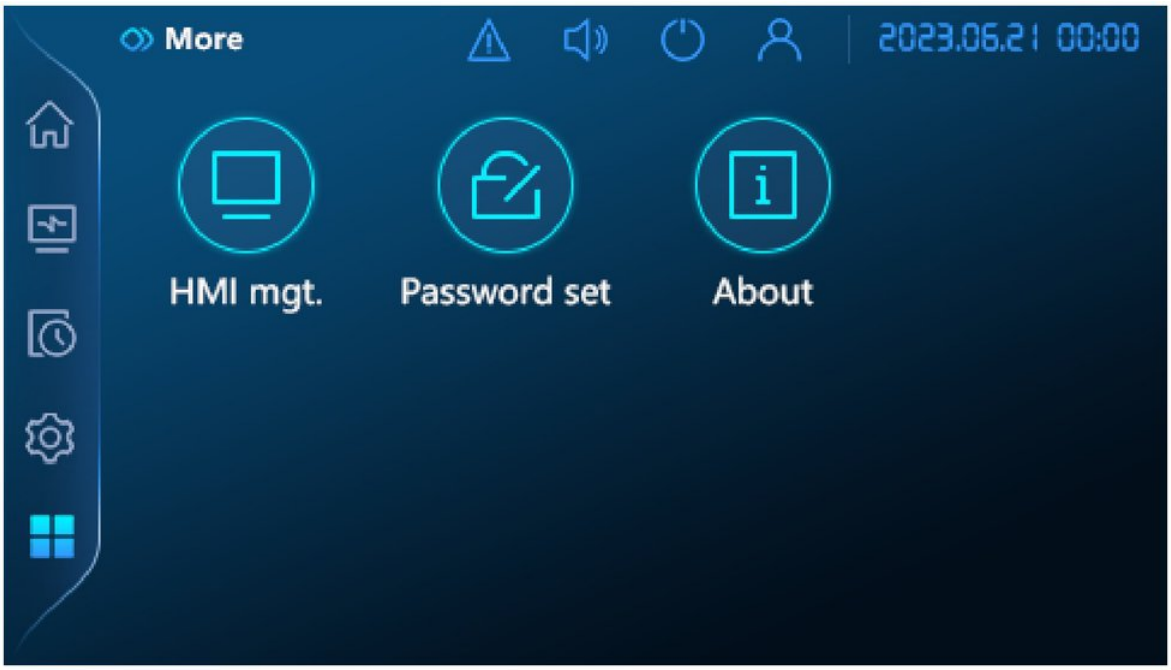

FIGURE 4-13 More page

TABLE 4-7 More page settings

Function page	Item	Setting / description
HMI management	Language	Chinese, English, Italian, Portuguese, Spanish, French, Russian (Central Asia)
	Date (y/m/d)	Sets the date
	Time (h/m/s)	Sets the time
	Screen orientation	Landscape, Portrait, Auto
	Backlight(s)	10~300
	Brightness	1~100
Password set		Changes the user and customer-service passwords
About		Product and company information

05

CHAPTER 5

Daily Operation

This chapter describes operation, routine maintenance and troubleshooting.

IN THIS CHAPTER

5.1 Pre-start Checks
5.2 Start-up
5.3 Shutdown
5.4 Parallel System

5.1 Pre-start Checks

- Check that the connections are tight and that the colours of the AC wires comply with the applicable wiring rules.
- Check that the UPS is properly earthed.
- Check that the voltage between neutral and earth is less than 5 Vac.
- If a remote monitoring device is used, check the wiring of the RS232 port.
- On long-backup models, check that the wiring between the UPS and the battery box is correct and secure.
- Check that the wiring is tidy and the cables are bundled in accordance with the applicable rules.
- Check that the installation leaves room for future changes, expansion and maintenance.
- Check that there is no short circuit at the UPS output and that the load does not exceed the rated capacity of the UPS.
- The IN.1 and EPO ports on the rear panel must be short-circuited for the UPS to work. The default function of IN.1 is BMD; the default state of IN.1 and EPO is NC.

5.2 Start-up

PROCEDURE

1. Close the external mains, bypass and battery breakers.
2. Tap the  icon on the home page, or press and hold the ON/OFF button for 2 s to 3 s, to start the UPS.
3. After about 10 s, when the UPS is running steadily, switch on the loads (e.g. PCs).

⚠ CAUTION

Switch on the loads from the largest to the smallest, to avoid an overload trip when the largest one starts.

5.3 Shutdown

PROCEDURE

1. Switch off the loads and let the UPS run without load for about 10 minutes to cool down.
2. Tap the  icon on the home page, or press and hold the ON/OFF button for 2 s to 3 s, to shut down the UPS.
3. Open the external battery, bypass and mains breakers.

5.4 Parallel System

5.4.1 Starting the Parallel System

> **⚠ CAUTION**
>
> Do not switch on any load until the whole parallel system has started, and make sure all the breakers of the output distribution cabinet are open.

To start the parallel system:

PROCEDURE

1. Check that every unit of the parallel system is installed correctly, then start the units as described in 5.2 Start-up one by one.
2. When every unit is on inverter, measure the inverter voltage of each unit: the difference between the highest and the lowest must be within 8 V. Close the breaker of each unit in the parallel distribution cabinet and measure the circulating current, which must be below 3 A.

If the difference exceeds 8 V, measure the output voltage of each UPS and check that they are all at the set output voltage; if the difference exceeds 15 V, contact AEC technical service. A high circulating current leads to an inverter fault: if it exceeds 3 A, contact AEC technical service.

3. Close the main output breaker of the output distribution cabinet and each output branch breaker, then switch on the loads one by one.

5.4.2 Shutting Down the Parallel System

Avoid starting and stopping the parallel system frequently.

PROCEDURE

1. Switch off all loads.
2. Shut down the UPS units one by one.
3. Open the breakers of each unit (in daily use they can stay closed).

5.4.3 Taking a UPS out of the Running System

If a UPS of the parallel system develops a fault, it leaves the system automatically with an audible and visual alarm. Then follow Figure 5-1 to take the faulty UPS out of the system completely, so it can be serviced or replaced while the system stays online.

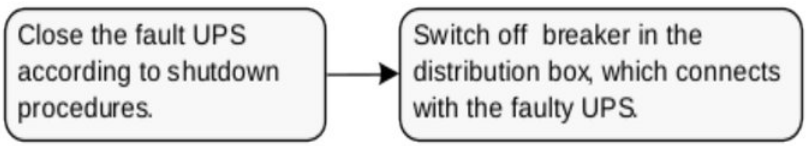

FIGURE 5-1 Taking a UPS out of the running parallel system

> **⚠ CAUTION**
>
> While the parallel system is running normally, do not disconnect a unit's output from the system before switching that unit off; otherwise the system output will be disturbed.

5.4.4 Adding a UPS to the Running System

To add one or more UPS to the parallel system, follow Figure 5-2. When the new UPS is running steadily it joins the system automatically and shares the load.

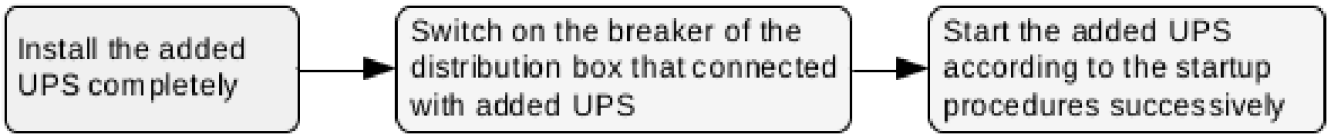

FIGURE 5-2 Adding a UPS to the running parallel system

5.4.5 Redundancy Function of Parallel System

In an N+1 redundant system the total load must not exceed N times the rated power of one unit. If one unit fails, it can leave or rejoin the system without affecting it, which increases reliability. When the load exceeds N times the rated power of one unit, the units give an overload alarm (above N/(N+1) of their rated power): for example, in a redundant system of two UPS, each unit gives the alarm when loaded above 50 % of its rated power.

CHAPTER 6

06 Maintenance and Troubleshooting

This chapter describes maintenance and troubleshooting.

IN THIS CHAPTER

6.1 Periodic Preventive Maintenance
6.2 Battery Maintenance
6.3 Fan Maintenance
6.4 Air Filter
6.5 Troubleshooting

6.1 Periodic Preventive Maintenance

To keep the UPS efficient and reliable, carry out the following maintenance regularly:

- Clean the UPS regularly with a dry cloth. Do not use liquid or spray cleaners. Shut down the UPS before cleaning.
- Check that the input and output connections are tight and in good condition.
- Check the cooling fans regularly. Keep the air outlets free of obstructions. Replace damaged fans promptly.
- Check the battery voltage and the working status of UPS regularly to detect faults early.

6.2 Battery Maintenance

Battery life depends on the ambient temperature and the number of discharge cycles. Prolonged use at high temperature or deep discharge shortens battery life.

For the battery boxes, observe the following:

- Charge the battery for 10 hours before first use. The UPS can be used while charging, but if a power failure occurs during this time the backup time may be shorter than the standard backup time.
- Generally, discharge and recharge the battery every 4 to 6 months: run the UPS on battery until it shuts down at low voltage, then recharge it. In hot areas, do this every 2 months. Each recharge of the standard battery should last more than 10 hours.
- If the UPS is not used for a long time, charge the battery for more than 10 hours every three months.
- Battery life is generally 3 to 5 years. Replace batteries that show reduced capacity without delay. Batteries must be replaced only by authorised service personnel.

6.3 Fan Maintenance

⚠ CAUTION

Before servicing the fans or cleaning/replacing the air filter, switch the UPS off and wait 10 minutes.

PROCEDURE

1. Remove the right side panel.

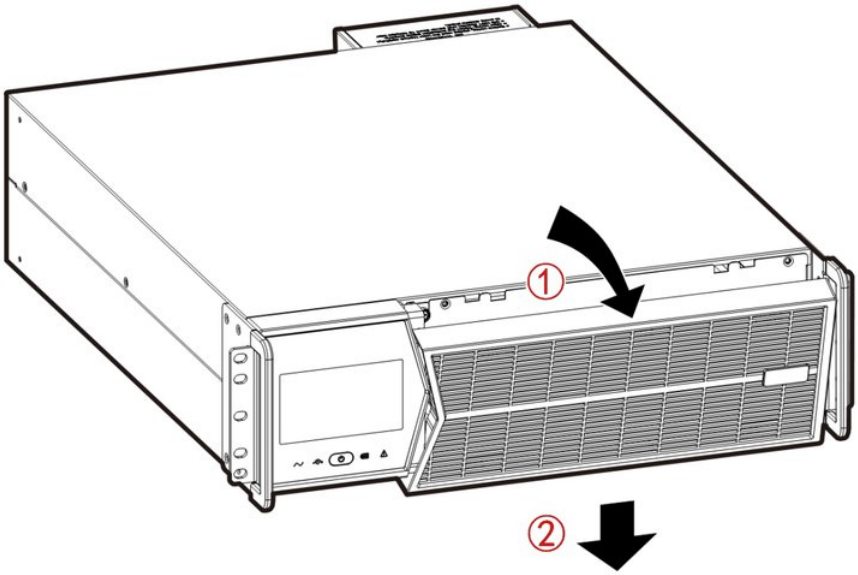

FIGURE 6-1 Removing the right side panel

2 Remove the six screws of the fan plate.

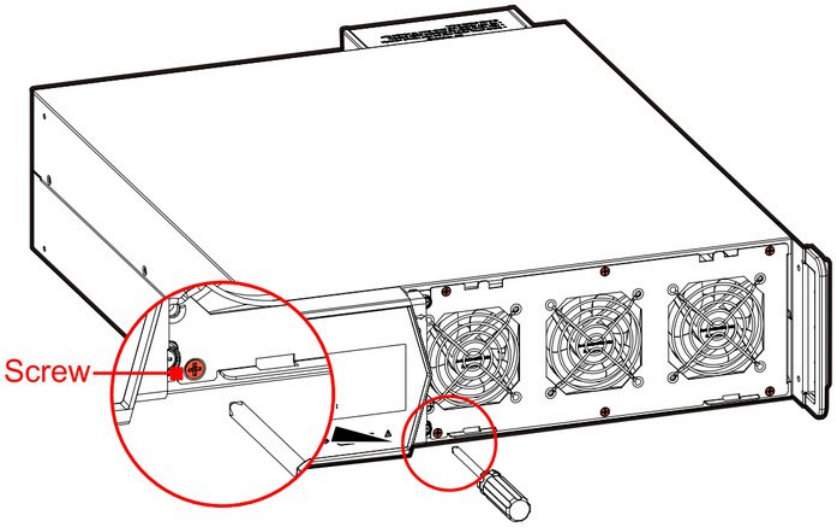

FIGURE 6-2 Removing the screws

3 Unplug the fan connector, remove the fan plate and service the fans.

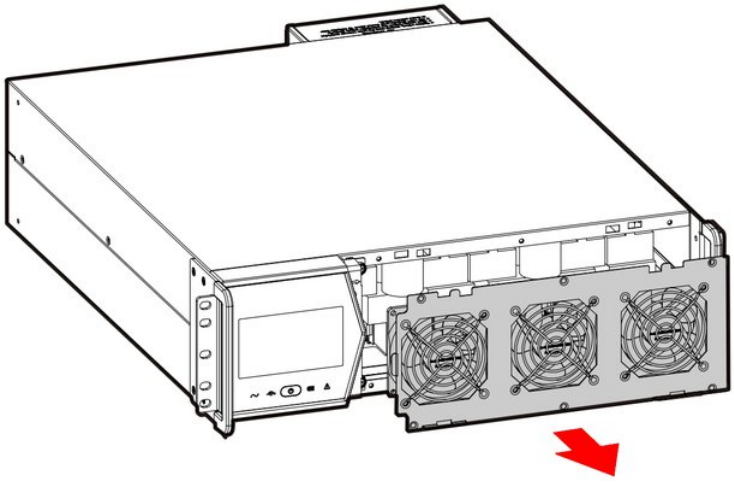

FIGURE 6-3 Removing the fans

4 Plug the fan connector back in and refit the fan plate.

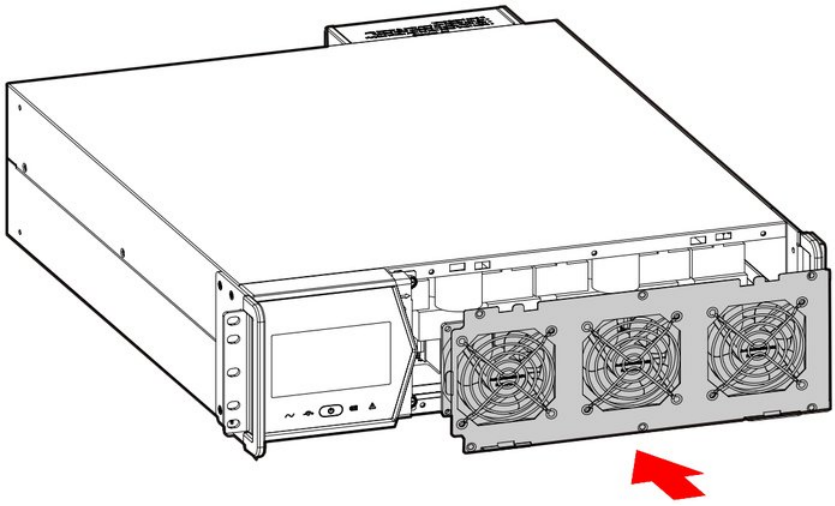

FIGURE 6-4 Refitting the fans

5 Tighten the six screws of the fan plate.

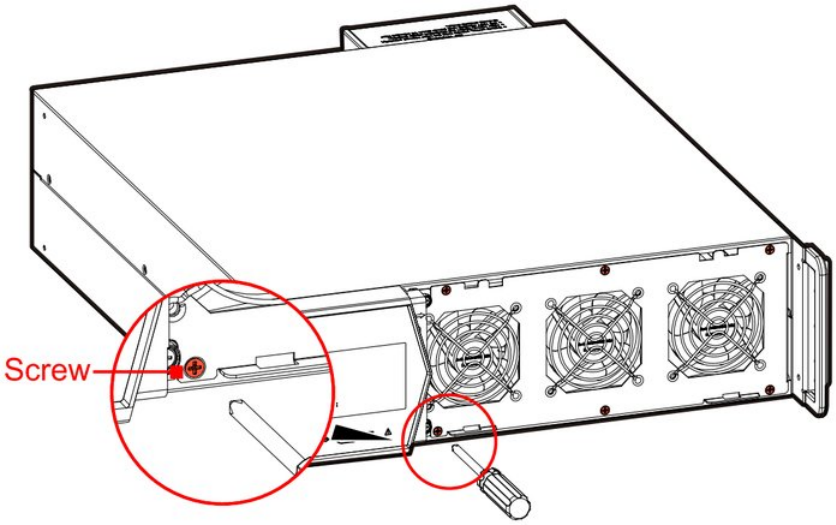

FIGURE 6-5 Tightening the screws

6 Refit the right side panel.

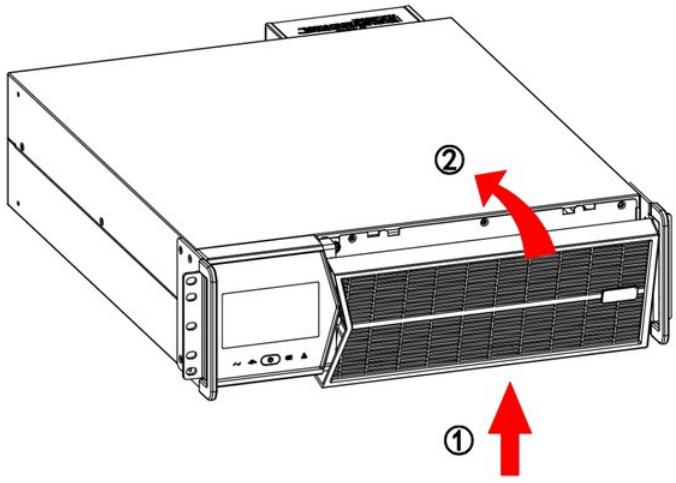

FIGURE 6-6 Refitting the right side panel

6.4 Air Filter

The air filter is an optional accessory.

6.4.1 Air Filter Installation

To fit the air filter:

PROCEDURE

1. Unpack the air filter.

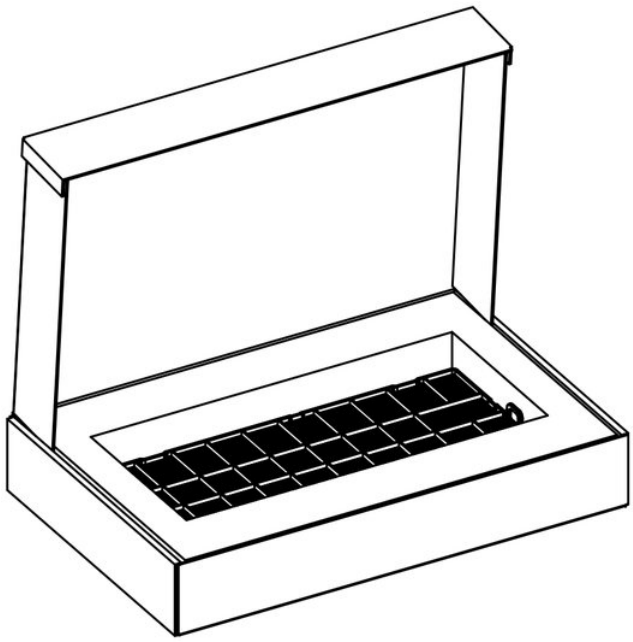

FIGURE 6-7 Unpacking the air filter

2. Remove the right side panel.

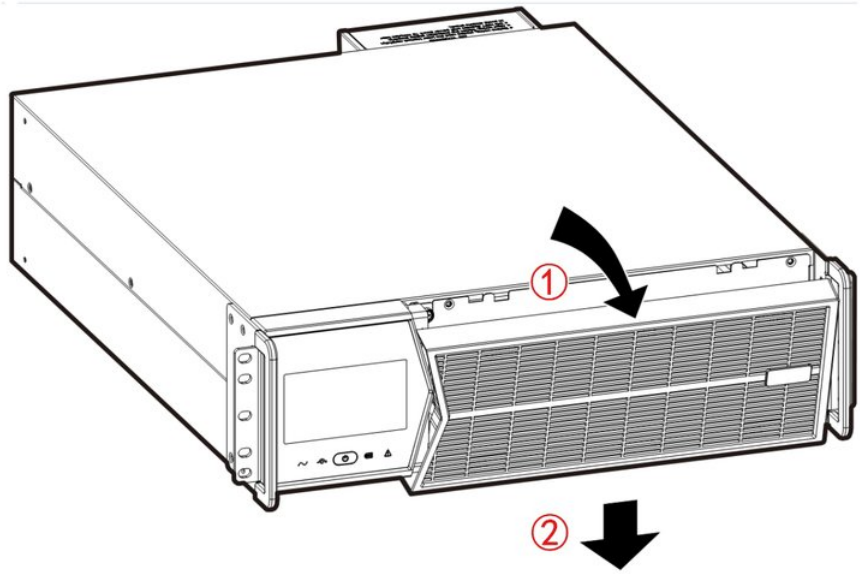

FIGURE 6-8 Removing the right side panel

3. Fit the air filter into the right side panel.

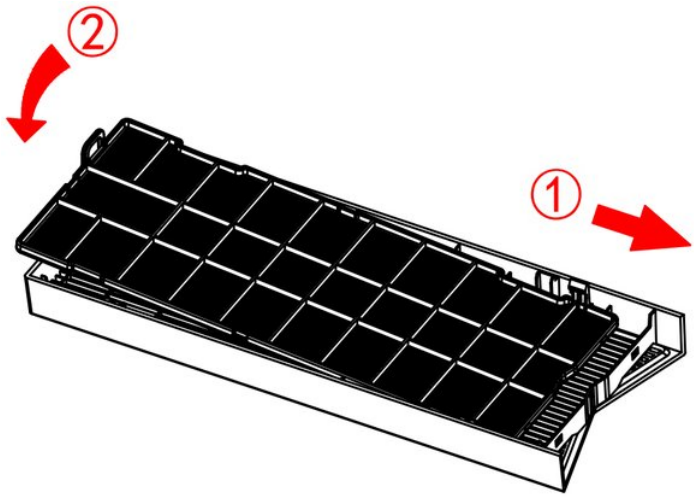

FIGURE 6-9 Fitting the air filter

4 Refit the right side panel.

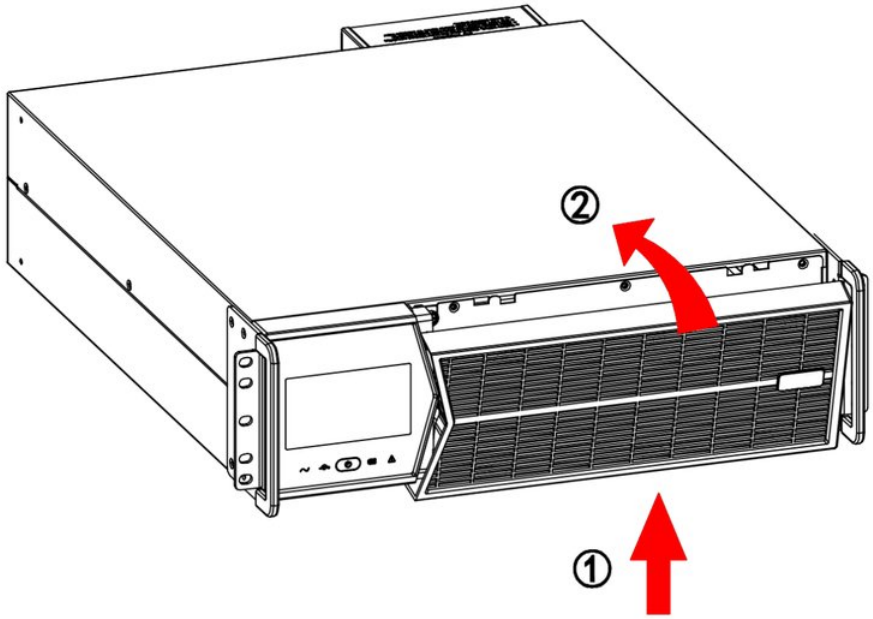

FIGURE 6-10 Refitting the right side panel

5 Log in (see **4.7 Project Management**) and tap the icon on the home page to open "Project management", then tap "Smart mgt.". Set "Dust filter cleaning reminder" to On and the reminder interval to 3 months, and save.

6.4.2 Air Filter Cleaning/Replacement

To clean or replace a fitted air filter:

PROCEDURE

1 Remove the right side panel as in step 2 of **6.4.1 Air Filter Installation**.

2 Take the air filter out of the right side panel.

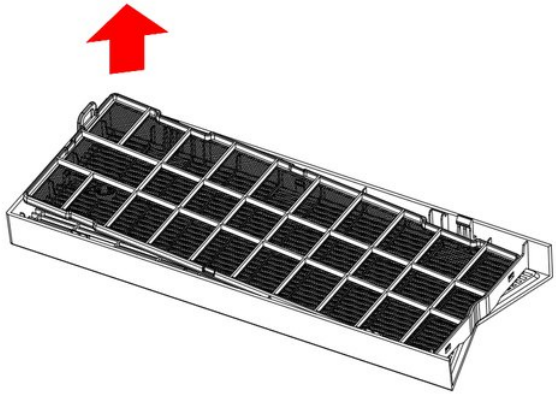

FIGURE 6-11 Removing the air filter

3 Clean and dry the air filter, or use a new one.

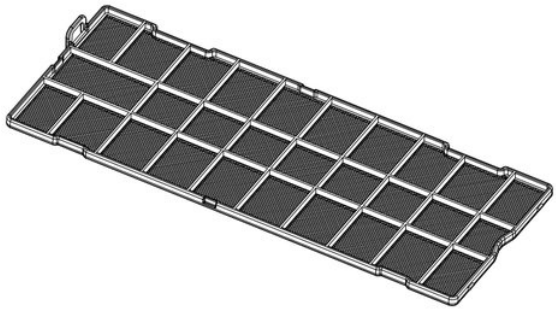

FIGURE 6-12 Cleaning the air filter

4 Fit the air filter into the right side panel and refit the panel as in steps 3 and 4 of **6.4.1 Air Filter Installation**.

5 Log in (see **4.7 Project Management**) and tap the icon on the home page to open "Project management", then tap "Smart mgt.". Set "Dust filter cleaning reminder" to Off and save, then set it to On and save again (this restarts the count).

NOTE

How often to clean and replace the air filter depends on the site; as a guide, clean it every 3 to 6 months and replace it every 2 years.

To activate the “Dust filter cleaning reminder” feature, log in with the customer-service password (ask AEC technical service).

6.5 Troubleshooting

6.5.1 Common Faults

Table 6-1 lists only some common faults. If in doubt, contact your local AEC office or distributor.

TABLE 6-1 Troubleshooting

Symptom	Possible cause
The mains is normal and the UPS output is normal after start-up, but the UPS runs in battery mode and the buzzer beeps intermittently.	1. Check that the contactors and terminals of the input circuit are in good condition; 2. Check on the touch screen whether the mains voltage or frequency is outside the range accepted by the UPS; 3. Check whether the mains input breaker is open; if so, close it.
After installation, switching on the mains blows the fuse or trips the breaker.	Short circuit in the UPS input or output wiring.
After starting, the touch screen display and output are normal. But as soon as a load is connected, the output stops immediately.	1. The UPS is heavily overloaded or the output is short-circuited. Reduce the load or find the short circuit; 2. The loads were not switched on from the largest to the smallest. Restart the UPS and, when it is running steadily, switch on the largest load first and then the smaller ones one by one.
The buzzer beeps continuously, the fault indicator is lit, and the UPS works in bypass mode (inverter failure).	1. Output overload: the load exceeds the rated power of the UPS. Reduce the load or choose a larger UPS; 2. UPS over-temperature protection. Check whether the UPS air inlet or outlet is blocked or the ambient temperature is outside the permitted range.
The UPS works normally, but at a power failure it does not transfer to battery mode, or it transfers to battery mode and soon shuts down on battery under-voltage.	1. Battery aged, capacity lost. Replace the batteries; 2. Battery charger fault: the battery is not being charged; 3. The battery cable is not connected properly or the terminals make poor contact.
With a PC as the load, everything works normally on mains. At a power failure, the UPS runs normally on battery, but the computer stops.	Poor earthing: the neutral-to-earth voltage is too high.

TABLE 6-2 Alarms and buzzer

No.	Alarm	Buzzer	Meaning
1	EPO	Continuous beep	Emergency power off (EPO) activated (if the EPO function is fitted): bypass output and inverter output are switched off.
2	Input/output configuration error	Continuous beep	The set system mode does not match the actual wiring. Check the mains and bypass wiring and make the wiring match the set mode.
3	Maintenance bypass open	Continuous beep	Maintenance bypass protection: inverter output off. Check that the maintenance bypass detection port on the rear panel is short-circuited.
4	Output short circuit	Continuous beep	Check the UPS output for a short circuit.
5	Output configuration mismatch	Continuous beep	The output mode setting of this UPS does not match the rest of the parallel system.
6	Inverter voltage mismatch	Continuous beep	The output voltage setting of this UPS does not match the rest of the parallel system.
7	Inverter frequency mismatch	Continuous beep	The frequency setting of this UPS does not match the rest of the parallel system.

TABLE 6-2 Alarms and buzzer *(continued)*

No.	Alarm	Buzzer	Meaning
8	Bypass voltage range mismatch	Continuous beep	The bypass voltage range setting of this UPS does not match the rest of the parallel system.
9	Bypass frequency range mismatch	Continuous beep	The bypass frequency range setting of this UPS does not match the rest of the parallel system.
10	Parallel mode mismatch	Continuous beep	The parallel mode setting of this UPS does not match the rest of the parallel system.
11	Power mismatch	Continuous beep	The power rating of this UPS does not match the rest of the parallel system.
12	Battery quantity mismatch	Continuous beep	The battery quantity setting of this UPS does not match the rest of the parallel system.
13	Parallel parameter mismatch	Continuous beep	A parameter setting of this UPS does not match the rest of the parallel system.
14	Short-circuit bypass setting mismatch	Continuous beep	The "bypass on output short circuit" setting of this UPS does not match the rest of the parallel system.
15	Parallel cable double-end disconnected	Continuous beep	Parallel cable disconnected at both ends.
16	Parallel cable single-end disconnected	Slow beep	Parallel cable disconnected at one end.
17	15 V auxiliary supply abnormal	Continuous beep	Internal 15 V auxiliary supply fault. If it does not clear by itself, contact service promptly.
18	Fan fault	Rapid beep (about every 0.2 s)	Fan fault warning: check the fans for damage or obstruction.
19	CAN communication abnormal	Slow beep (about every 2 s)	CAN communication of the parallel system abnormal: check whether a parallel cable is damaged or whether only one UPS of the parallel system is running.
20	SCI communication fault	Continuous beep	Internal communication abnormal. If the alarm persists, contact service promptly.
21	Parallel UPS without redundancy alarm	Slow beep (about every 2 s)	The total load of the parallel system exceeds the full load of a single UPS, so redundancy is lost: check the output load.
22	Mains abnormal	Continuous beep	Mains input phase sequence wrong. Check the mains input wiring.
		3 beeps every 10 s	Mains input fault: missing neutral, power failure, over- or under-voltage, over- or under-frequency. Check the mains input.
23	Bypass abnormal	Slow beep (about every 2 s)	In mains mode: bypass voltage, frequency or phase sequence abnormal, or the set mode does not match the wiring. Check that the bypass breaker is closed, that the bypass phase sequence is right and that the bypass wiring matches the set system mode.
24	Battery abnormal	Slow beep (about every 2 s)	Battery over-voltage protection, charger fuse failure or over-voltage alarm. Check the battery.
		Rapid beep (about every 0.2 s)	Battery wiring fault, charger short circuit, under-voltage protection or under-voltage warning. Check the battery wiring and status.
		No beep	Battery charging temperature too high.
25	Rectifier abnormal	Continuous beep	Rectifier fault.
26	Inverter abnormal	Continuous beep	Inverter fault.

NOTE

The buzzer patterns in the table apply when the UPS is on and the buzzer is not muted. When the UPS is off, or the buzzer is muted, the alarms are shown on the touch screen only.

CHAPTER 7

07 Package, Transportation and Storage

IN THIS CHAPTER

7.1 Package
7.2 Transportation
7.3 Storage

7.1 Package

The package carries the handling marks (keep dry, fragile, this way up, stacking limit, etc.) and the model on its side, and the product name on its front. Keep the package in the marked orientation.

7.2 Transportation

During transport, observe the warning marks and avoid severe impacts on the package. Place the device in the marked orientation to avoid damaging components. Flammable, explosive or corrosive materials must not be shipped with the device. Do not leave the device outdoors during transit or intermediate storage. The device must not be exposed to rain, snow, liquids or mechanical damage.

7.3 Storage

Store the UPS in the marked orientation. Keep the package 200 mm above the floor and at least 500 mm from walls, heat sources, cold sources, windows and air inlets.

Storage temperature 0 °C to 40 °C, relative humidity 20 % to 80 %. The warehouse must be free of flammable, explosive or corrosive materials and harmful gases, and of strong vibration, shocks and magnetic fields. Under these conditions the UPS can be stored for 6 months; after longer storage it must be checked again. During long storage, charge the batteries every 3 months.

APPENDIX A

A Technical Specifications

Index ⌄	Model ›	10 kVA	20 kVA	30 kVA	40 kVA
Input	Input mode	3W + N + PE (can be set to 1W + N + PE)		3W + N + PE	
	Voltage range (Vac)	High-voltage mode (output set to 220/230/240 V): full load at a phase voltage of 176 V to 280 V; from 80 V to 176 V the output is derated linearly from 100 % to 15 % Low-voltage mode (output set to 110/115/120 V): full load at a phase voltage of 90 V to 155 V; from 70 V to 90 V the output is derated linearly from 100 % to 75 %			
	Frequency range (Hz)	40~70			
	Bypass synchronisation range (Hz)	50/60 Hz ±10% (50/60 Hz self-adapting)			
	Bypass input voltage range (Vac)	High-voltage mode: 220/230/240 ±20 % (phase voltage) (default 230) Low-voltage mode: 110/115/120 ±20 % (phase voltage) (default 120)			
	Input power factor	≥0.99			
	Input THDI	Resistive full load: ≤ 3 %; non-linear full load: ≤ 5 %			
	Battery voltage (Vdc)	High-voltage mode: ±96 to ±240 (±48 to ±120 cells selectable, default ±96 cells; cell voltage 2 Vdc) Low-voltage mode: ±96 to ±120 (±48 to ±60 cells selectable, default ±60 cells)		High-voltage mode: ±96 to ±240 (±48 to ±120 cells selectable, default ±96 cells; from ±48 to ±90 cells the full load is derated by 100 × 0.0625 × N/6, N = number of cells; cell voltage 2 Vdc) Low-voltage mode: ±96 to ±120 (±48 to ±60 cells selectable, default ±60 cells)	
	Charge current (A)	1 to 10, settable (default 4 A)		1 to 20, settable (default 15 A)	

Index ⌄	Model ›	10 kVA	20 kVA	30 kVA	40 kVA
Output	Output mode	3W + N + PE (can be set to 1W + N + PE)			
	Capacity (kVA/kW)	10/10	High-voltage mode: 20/20 Low-voltage mode: 10/10	30/30	High-voltage mode: 40/40 Low-voltage mode: 20/20
	Voltage (Vac)	High-voltage mode: L-N 220/230/240 (default 230) L-L 380/400/415 (default 400) Low-voltage mode: L-N 110/115/120 (default 120) L-L 190/200/208 (default 208)			
	Frequency (Hz)	Mains normal: tracks the bypass input frequency; mains abnormal: 50 ±0.1 or 60 ±0.1 (default 50)			
	Wave form	Sine-wave			
	Voltage distortion	Resistive full load: ≤ 2 %			
	Power factor	1.0			
	Inverter ↔ bypass transfer time (ms)	Synchronised: < 1 ms; not synchronised: < 10 ms			
	System efficiency	High-voltage mode: up to 96 %; low-voltage mode: up to 94 %			
	Overload capacity	Inverter: Load ≤ 105 %: continuous 105 % < load ≤ 110 %: 60 min 110 % < load ≤ 130 %: 10 min 130 % < load ≤ 155 %: 1 min Load > 155 %: 200 ms Load > 200 %: immediate protection Bypass: < 130 %: continuous 130 % to 155 %: 1 min > 155 %: 200 ms			
Others	Battery cold start	Equipped			
	Panel display	Touch screen with the UPS operating status			
	Communication port	RS232			
	Alarm function	Battery low voltage, mains abnormal, UPS fault, output overload, etc.			
	Protection function	Battery under-voltage, overload, short circuit, over-temperature, input over-voltage, communication fault, etc.			
	Noise (dB)	Half load ≤ 50, 75 % load ≤ 55, full load ≤ 55 (20 °C to 25 °C)		Half load ≤ 55, 75 % load ≤ 58, full load ≤ 60 (20 °C to 25 °C)	
	Operating temperature (°C)	-5 ~ 40			
	Relative humidity	0 to 95%, non-condensing			
	Altitude	≤2000m			
	Size (W×D×H) (mm)	438×535×130		438×720×130	
	Weight (kg)	18.4		34.1	34.2

- Specifications are subject to change without notice.

Dimensions and weights

Overall dimensions in millimetres (W × D × H) and net weights, from the technical data of this manual. Leave the clearances given in the installation chapter around the UPS.

IST9 10 / 20 kVA

3U, rack or tower



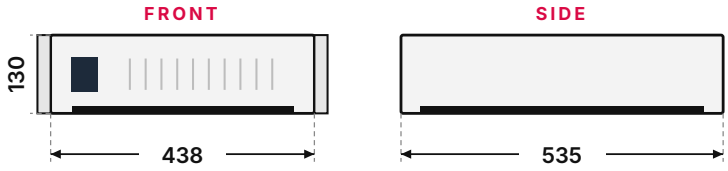

W × D × H	438 × 535 × 130 mm
10 kVA	18.4 kg
20 kVA	18.4 kg

IST9 30 / 40 kVA

3U, rack or tower



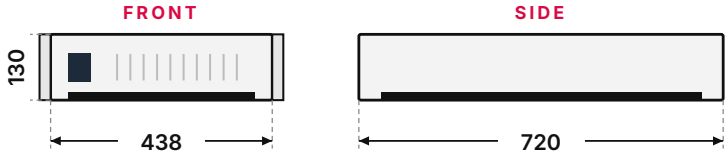

W × D × H	438 × 720 × 130 mm
30 kVA	34.1 kg
40 kVA	34.2 kg

APPENDIX B

B Acronyms and Abbreviations

Acronym	Meaning
AC	Alternating Current
BMD	Bypass Maintenance Detection
DC	Direct Current
ECO	Economic Operation Mode
EPO	Emergency Power Off
HMI	Human-Machine Interface
IEC	International Electrotechnical Commission
IGBT	Insulated-Gate Bipolar Transistor
NC	Normally Closed (contact)
PE	Protective Earth
PFC	Power Factor Correction
RS232	Recommended Standard 232
RS485	Recommended Standard 485 (serial bus)
SNMP	Simple Network Management Protocol
UPS	Uninterruptible Power Supply

More on the AEC partner portal

PARTNER PORTAL

portal.emea.aecups.com

- 3D models of every UPS
- Diagrams and drawings
- Video tutorials
- Manuals and catalogues, always up to date

WHATSAPP SUPPORT

+39 393 080 5211

Technical support 24/7. Scan the code to write to AEC service.

AEC International Srl
Via Nerviano 55 · 20045 Lainate (MI) · Italy

Sales +39 02 9415 8991 · info@aecups.com
Service +39 393 080 5211 · service@aecups.com