MODULAR LITHIUM BATTERY SYSTEM · LIFEPO4 · FOR AEC IST6

L6 LITHIUM

40 · 50 · 100 Ah modules

Modular LiFePO4 battery cabinet for the AEC IST6 modular UPS: up to 20 hot-swappable modules of 40 or 50 Ah, or 12 of 100 Ah, per cabinet, each with its own DC/DC converter, a three-level BMS and a touchscreen master cabinet.

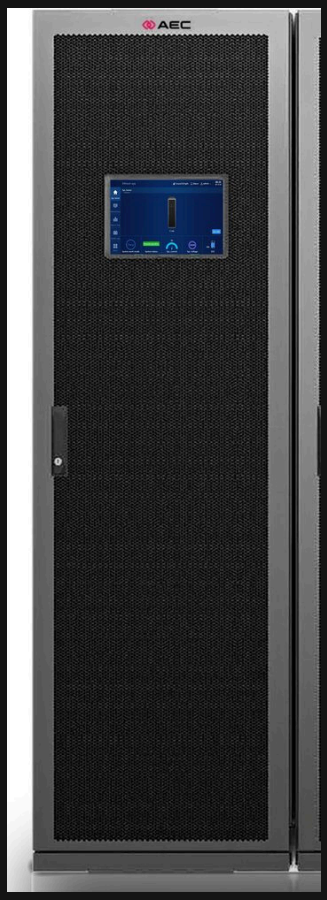

User Manual

Installation · Operation · Maintenance

L6-CAB-10x50LI | L6-CAB-20x50LI | L6-CAB-EMPTY | L6-MOD-50LI | L6-COMBINER | 40 Ah module | 100 Ah module

COPYRIGHT AND NOTICES

Copyright © 2026 AEC International Srl. All rights reserved. No part of this document may be reproduced or transmitted in any form or by any means without the prior written consent of AEC International Srl.

Trademarks. AEC and L6 are trademarks of the AEC group. All other trademarks and trade names mentioned in this document are the property of their respective owners.

Notice. The products, services and features you purchase are defined by the contract between AEC and the customer; some of those described in this document may not be included in your purchase or use. Unless the contract says otherwise, all statements, information and recommendations in this document are provided “as is”, without warranties, guarantees or representations of any kind, express or implied. The information in this document may change without notice. Every effort has been made to ensure its accuracy, but nothing in it constitutes a warranty of any kind, express or implied. The illustrations are for reference: the actual product may differ slightly.

AEC International Srl
Via Nerviano 55, 20045 Lainate (MI), Italy
Office: +39 02 9415 8991
Technical support, 24/7 · phone and WhatsApp: **+39 393 080 5211**
service@aecups.com · sales@aecups.com · aecups.com

AEC-UM-L6-EMEA · Rev. A · November 2026. Rev. A is the first EMEA edition: the L6 cabinet with 50 Ah modules as in the AEC range, plus the 40 Ah and 100 Ah versions, for the AEC IST6 modular UPS, with SI units, IEC 60364 installation references and the AEC EMEA contacts.

BEFORE YOU START

About this manual

Thank you for choosing the AEC L6 lithium battery system. This manual describes the L6 cabinet with 50 Ah modules, and the 40 Ah and 100 Ah versions: safety, the cabinet, its modules and control box, the connection to the AEC IST6 UPS, installation and wiring of one or several cabinets, the power-on test, daily operation, emergency power off, maintenance, troubleshooting, transport, storage and the specifications. Read it before you start, and keep it near the equipment.

MODELS COVERED

L6-CAB-10×50LI and L6-CAB-20×50LI cabinets (10 or 20 × L6-MOD-50LI modules), the empty cabinet L6-CAB-EMPTY, the L6-MOD-50LI module and the L6-COMBINER combiner cabinet; the L6-40 cabinet with 40 Ah modules and the L6-100 cabinet with 100 Ah modules (codes on request), for the AEC IST6 modular UPS. The touchscreen (MBMU) has its own manual, AEC-UM-L6T-EMEA. Ordering codes: Table 2-3.

WHO THIS MANUAL IS FOR

Qualified electricians install and wire the system to IEC 60364 and the local regulations. An engineer approved by AEC commissions it. Trained operators use it every day. Only authorized personnel change settings.

Safety messages

Safety messages in this manual use four signal words. The signal word tells how serious the hazard is:

DANGER	A hazardous situation which, if not avoided, **will** result in death or serious injury.
WARNING	A hazardous situation which, if not avoided, **could** result in death or serious injury.
CAUTION	A hazardous situation which, if not avoided, could result in minor or moderate injury.
NOTICE	Information about practices that could damage the equipment, lose data, reduce performance or give unexpected results — not related to injury.

Other conventions

i NOTE Additional information that stresses or completes the text.

✓ TIP A hint that helps you solve a problem or save time.

Keys are shown like [ON]; menus like **Settings › Battery**. Numbers in red circles on a picture are explained in the list under it. Cross-references in red are links in the PDF.

QUICK START

From delivery to daily use in six steps

The short version — each step points to the full instructions. Read the safety chapter first.

1. **Check the site:** concrete or non-combustible floor, 0–40 °C, 800 mm free in front and behind. Section 3.3, page 34, Section 3.4, page 34.
2. **Move and fix the cabinets** with a forklift or pallet jack, bolt them to the floor and to each other. Section 3.6, page 36, Section 3.7, page 37.
3. **Fit the battery modules** from the bottom up, knobs at OFF (unlocked). Section 3.8, page 39.
4. **Wire the DC output** to the battery input of the IST6 (through the L6-COMBINER for several cabinets), then the auxiliary supply, EPO and communication cables. Section 2.2, page 10, Section 3.12.1, page 43, Section 3.12.2, page 46.
5. **Check and test:** the installation checklist, then the first power-on test with the UPS. Section 3.13, page 52, Section 4.3, page 53.
6. **Daily use:** on — battery breakers, then module knobs; off — UPS first, then breakers, then knobs. Section 4.4, page 54.

40 · 50 · 100 Ah
LiFePO4 modules, hot-swappable

20 · 12
modules per cabinet: 40 / 50 Ah · 100 Ah

240 · ±240 · 480 V DC
DC/DC output to the AEC IST6

5 years
warranty, AEC lithium ranges

CONTENTS

Contents

1 Safety 7
1.1 General safety 7
1.2 Battery safety 8
1.3 Grounding 8
1.4 Warning signs 8
1.5 Operation and maintenance 8
1.6 Handling and disposal of modules 9
1.7 Standards 9

2 Product description 10
2.1 Introduction 10
2.2 IST6 + L6 system 10
2.3 Models and ordering codes 11
2.4 What is in the box 13
2.5 Single cabinet and multi-cabinet systems 14
2.6 Front of the master and slave cabinets 16
2.7 Touchscreen (MBMU) 16
2.8 Indicator panel (slave cabinets) 17
2.9 Inside the cabinet 18
2.10 Battery module 22
2.11 Control box ports 24
2.12 Airflow 26
2.13 How the system works 28
2.14 Options 29

3 Installation 32
3.1 Installation sequence 32
3.2 Tools 33
3.3 Site and environment 34
3.4 Working space and clearances 34
3.5 Cables and terminals 35
3.6 Transport and unpacking 36
3.7 Installing a cabinet 37
3.8 Fitting the battery modules 39
3.9 Installing the combiner cabinet 40
3.10 Fitting the in-row rear frame 40
3.11 Joining several cabinets 41
3.12 Electrical connections 42
3.13 Installation checklist 52

4 Operation 53
4.1 Before you start 53
4.2 Operation sequence 53
4.3 First power-on test 53
4.4 Daily power on and power down 54
4.5 Emergency power off (EPO) 54
4.6 Recovery after an EPO 54

5 Maintenance and troubleshooting 56

5.1 Safety precautions 56
5.2 Preventive maintenance 56
5.3 Care of the modules 56
5.4 Replacing a module 57
5.5 Troubleshooting 57
5.6 What to do in a fault 58

6 Transport and storage 59
6.1 Packaging 59
6.2 Transport 59
6.3 Storage 59

7 Specifications 60

A Acronyms and abbreviations 62

CHAPTER 1

01 Safety

Read this chapter before you install, operate or service the L6 system.
Safety messages also appear in the chapters where each task is described.

⚠ WARNING · IMPORTANT SAFETY INSTRUCTIONS — SAVE THESE INSTRUCTIONS

This manual contains important instructions for the installation, operation and maintenance of the L6 lithium battery system. Follow all danger, warning and caution messages. The messages in this manual do not cover every hazard: they add to the local safety regulations and to IEC 60364 (low-voltage electrical installations).

i NOTE Damage caused by not following the safety instructions, the general safety rules or the standards of design, installation and use is not covered by the warranty.

1.1 General safety

⚠ DANGER

- **Lethal DC voltage.** The cabinet output carries up to 480 V DC (600 V DC maximum). Do not touch terminals or conductors connected to the battery positive or negative.
- A damaged or faulty cabinet can cause electric shock or fire. Before any work, look for damage, and check that the connections to other equipment and circuits are safe.
- Never touch high voltage or mains power directly, or with wet objects.

⚠ WARNING

- Do not put fingers or tools into the fans while they turn.
- In case of fire, use an extinguisher suitable for lithium-ion battery systems.
- Do not open the cabinet panels unless you are an authorized service technician. Only the front door and the panels named in this manual are opened during installation.

⚠ CAUTION

- Do not let liquids or objects enter the cabinet.
- The cabinet output can carry hazardous voltage. Put warning labels around the L6 system that say: "Disconnect the L6 battery system before working on the wiring."

1.2 Battery safety

⚠ WARNING

- Before use, check that the charge voltage of the UPS matches the L6 system (Table 7-1). If in doubt, ask AEC.
- Wire the battery exactly as this manual says, in particular the DC output. Wrong wiring damages the battery and endangers people.
- Never short the positive and negative of the output. Tighten every battery connection.
- Do not touch two terminals or two battery conductors at the same time.
- Keep the battery away from equipment that can make sparks.

1.3 Grounding

⚠ WARNING

High leakage current. Connect the cabinet to ground before any other electrical connection.

- Connect the ground conductor first when you install, and remove it last when you dismantle.
- Do not damage the ground conductor.
- The cabinet must stay permanently connected to protective ground (PE). Before operation, check that the grounding is sound.

1.4 Warning signs

Keep unauthorized people away from the L6 system, and prevent wrong operation, during installation, maintenance and repair:

- Put warning signs on the breakers so that nobody closes them by mistake.
- Mark the work area with warning signs or a safety barrier.
- After maintenance, remove the door key and keep it in a safe place.

1.5 Operation and maintenance

High temperature and high voltage are present inside the cabinet. Follow the safety regulations and the procedures of this manual.

⚠ DANGER

- Never connect or disconnect live wires: open the breakers first. Check that the cables and their labels match the installation.
- Even with all power disconnected, high voltage and residual charge can stay inside the cabinet. Before maintenance, open the battery breakers, set every module knob to OFF, wait at least **10 minutes**, then measure the voltage at the terminals with a voltmeter.

⚠ WARNING

- Only qualified personnel, or people they supervise, may wire and operate the L6 system. The installation must comply with IEC 60364 and local regulations.
- Hazardous voltage can be present at the battery terminals and at the ground terminals. Use insulating protection.
- Remove watches, bracelets, rings and other conductive objects before you work.
- Check the parts and connections every year, and retighten them.
- Replace a battery module only with a module of the same type and capacity as the cabinet: L6-MOD-50LI in a 50 Ah cabinet, a 40 Ah or 100 Ah module in a 40 Ah or 100 Ah cabinet.
- **Do not drill the cabinet.** Drilling damages the parts inside, and metal chips short-circuit the circuit boards.

i NOTE Changing the configuration, structure or assembly affects the performance of the L6 system. Ask AEC before you make any change.

1.6 Handling and disposal of modules

⚠ WARNING

- Do not put a battery module into fire: it can explode.
- Do not open or damage a module. The electrolyte inside is toxic and harmful to skin and eyes.
- Do not touch the positive and negative of one module at the same time.

A module can cause electric shock and very high short-circuit current. When you handle modules:

- Remove watches, rings and other metal objects.
- Use tools with insulated handles.
- Wear rubber gloves and safety shoes.
- Do not put tools or metal parts on a module.
- Set the module knob to OFF (unlocked) before you connect or disconnect anything (Section 2.10.1).
- Recycle used modules according to the local regulations; ask AEC service for return and recycling.

1.7 Standards

TABLE 1-1 Standards and regulations

Standard	Subject
IEC 62040-3	UPS performance — reference for altitude derating
IEC 60364	Low-voltage electrical installations: installation, protection and working space, with the local regulations
IEC 60364-5-52	Selection of wiring systems: sizing of the DC cables (Section 3.5)

02

CHAPTER 2

Product description

What the L6 system is and how it works with the AEC IST6 UPS, the ordering codes, the master and slave cabinets and their panels, the battery module, the control box ports, airflow, how it works and the options.

2.1 Introduction

The L6 is a modular lithium iron phosphate (LiFePO4) battery system for the **AEC IST6** modular UPS. Do not connect it to any other UPS without the written approval of AEC.

An L6 system is one cabinet, or several cabinets in parallel. Each cabinet holds up to 20 hot-swappable modules of 40 Ah or 50 Ah, or up to 12 modules of 100 Ah, with the battery breakers, a control box and the battery management system (BMS). Every module has its own isolated, bidirectional DC/DC converter: it charges its cells from the UPS and, on a mains failure, supplies the UPS DC bus at 240 V, ±240 V or 480 V DC, as the system is set (Section 2.13). No separate high-voltage battery string is needed.

This manual describes the L6 cabinet with 50 Ah modules in detail. The 40 Ah and 100 Ah versions are installed, wired and operated the same way; their differences are given where they apply (Section 2.9.1, Section 2.10.3, Table 7-2).

2.2 IST6 + L6 system

Paired with an AEC IST6 modular UPS, both halves of the system are modular: the power modules of the IST6 and the battery modules of the L6 are redundant (N+X) and hot-swappable, in cabinets side by side. If a power module or a battery module stops, the load stays on the inverter and on the battery. Power modules and battery modules are both replaced online, from the front.



FIGURE 2-1 AEC IST6 modular UPS (left) beside an L6 lithium cabinet with 20 modules (right)

How the L6 connects to the IST6. The DC output of the L6 (+, N, −) goes to the battery input of the IST6, directly from one cabinet or through the L6-COMBINER from several cabinets (Section 3.12.1, Section 3.12.3). The master cabinet sends the battery data to the IST6 over RS485, to the BMS port of the optional **BMS expansion card** of the IST6 (charge- and discharge-disable inputs) (Section 3.12.2).

TABLE 2-1 Battery input of the AEC IST6 (AEC EMEA catalogue)

IST6 range	Battery input
IST6 30–120 kVA	Split battery, ±168 … ±276 V DC (±14 … ±23 × 12 V blocks, default ±16)
IST6 200–500 kVA	Split battery +/N/−, ±240 V DC nominal (40 blocks of 12 V)
IST6 400–1200 kVA	480 V DC nominal with 40 blocks of 12 V (360–600 V); battery neutral optional (±240 V)
Every range	Lithium battery with the optional BMS expansion card

⚠ *WARNING*

The L6 has three output systems: 240 V DC, ±240 V DC with the midline N, and 480 V DC (Section 2.13). AEC configures the system for each UPS. Before you wire, check that the output system of your L6 and the use of the N busbar match the battery input of your IST6 (system documents supplied by AEC, and the IST6 user manual). If in doubt, ask AEC.

TABLE 2-2 L6 at a glance

Feature	What it gives you
Safety	The modules are isolated from the UPS electrically and physically. The module output is low voltage, and there is no output while a module is OFF. A faulty module disconnects itself; the others keep working. On-line insulation monitoring warns of insulation faults. Fire protection at module level. Three-level BMS.
Redundancy	Modules work in parallel (N+1): one module more than the load needs keeps the system running if a module stops.
Smart control	Output power and state of charge (SOC) are balanced between modules and cabinets, so new and old modules can be mixed. Capacity test without risk to the load. Alarm history and data records. Fan speed follows the load.
Simple	Add modules or cabinets in stages, without shutting down. Replace a module in a few minutes.
Monitoring	Touchscreen (MBMU) on the master cabinet; RS485 link to the UPS; network port for a monitoring computer.

2.3 Models and ordering codes

TABLE 2-3 L6 ordering codes

Code	Configuration	Weight
L6-CAB-10×50LI	L6 cabinet with 10 × 50 Ah modules (10 of 20 slots fitted), BMS and smoke detector	615 kg
L6-CAB-20×50LI	L6 cabinet with 20 × 50 Ah modules (full), BMS and smoke detector	985 kg
L6-CAB-EMPTY	L6 cabinet without modules, with BMS and smoke detector; holds up to 20 × L6-MOD-50LI	244.9 kg
L6-MOD-50LI	LiFePO4 module 50 Ah / 2.88 kWh with integrated DC/DC converter, hot-swappable	37 kg

Code	Configuration	Weight
L6-COMBINER	Combiner cabinet (model L6-C-4000): combines the DC output of up to 8 L6 cabinets, 4,000 A	140 kg

TABLE 2-4 40 Ah and 100 Ah versions — codes on request

Item	Configuration	Weight
L6-40 cabinet	Cabinet for up to 20 × 40 Ah modules, master or slave	965 ± 20 kg with 20 modules
40 Ah module	LiFePO4 module 40 Ah / 2.3 kWh, 6C cells, DC/DC 10 kW, hot-swappable	36 ± 1 kg
L6-100 cabinet	Cabinet for up to 12 × 100 Ah modules, master or slave	810 ± 24 kg with 12 modules
100 Ah module	LiFePO4 module 100 Ah / 5.76 kWh, 1C cells, DC/DC 5 kW, hot-swappable	52 ± 1 kg
L6-C-2000 combiner	Combiner cabinet for up to 4 L6 cabinets, 2,000 A	Ask AEC

How to read the code. L6-CAB-20×50LI means an L6 cabinet (CAB) with 20 modules of 50 Ah lithium (50LI). Every cabinet measures 600 × 850 × 2,000 mm (W × D × H). The 40 Ah and 100 Ah cabinets, modules and the 4-cabinet combiner have no ordering code yet: ask AEC. The warranty is 5 years, as on all AEC lithium ranges.

One or two battery breakers. The 40 Ah and 50 Ah cabinets described in this manual (model M) have two battery breakers. Model M1 has one battery breaker and is otherwise the same; it is recommended for a UPS below 100 kVA with a backup time within 30 minutes. Ask AEC for the M1 version.

Master and slave. A system has one master cabinet, with the touchscreen, and up to 14 slave cabinets, with the indicator panel (Section 2.6). They are otherwise identical. Tell AEC the number of cabinets when you order.

How many modules. AEC sizes the system with the UPS: module type, number of modules and cabinets, and the margin, for each project. Choose the module by the backup time: 40 Ah (6C cells) for high power and short backup, 50 Ah (4C cells) for more energy and short backup, 100 Ah (1C cells) for backup times of hours. As a rule for 50 Ah modules, one module carries 10 kW and gives 2.5 kWh to the load: the number of modules is the larger of *load kW ÷ 10* and *load kWh needed ÷ 2.5*. Example: a 200 kW load needs 20 modules for power, and 20 modules then run it for about 15 minutes (20 × 2.5 kWh ÷ 200 kW = 0.25 h). Section 2.3.1 gives the AEC sizing tables for the three module types.

2.3.1 Backup times

Cabinets and modules needed for each UPS power, written *cabinets · modules*, from the AEC sizing tables at initial capacity. Plan a 10 % margin: actual backup = theoretical backup × 0.9. Modules can be added one at a time for a precise sizing.

TABLE 2-5 40 Ah modules — 10 and 20 minutes

UPS kW	10 min	20 min
≤ 60	1 · 6	1 · 12
≤ 80	1 · 8	1 · 16
≤ 100	1 · 10	1 · 20
≤ 200	1 · 20	2 · 40
≤ 300	2 · 30	3 · 60
≤ 400	2 · 40	4 · 80
≤ 500	3 · 50	5 · 100
≤ 600	3 · 60	6 · 120
≤ 800	4 · 80	8 · 160

TABLE 2-6 50 Ah modules — 15 and 30 minutes

UPS kW	15 min	30 min
≤ 60	1 · 6	1 · 12
≤ 80	1 · 8	1 · 16
≤ 100	1 · 10	1 · 20
≤ 200	1 · 20	2 · 40
≤ 300	2 · 30	3 · 60
≤ 400	2 · 40	4 · 80
≤ 500	3 · 50	5 · 100
≤ 600	3 · 60	6 · 120
≤ 800	4 · 80	8 · 160

TABLE 2-7 100 Ah modules — 1, 2 and 4 hours

UPS kW	1 h	2 h	4 h
≤ 6	1 · 2	1 · 3	1 · 5
≤ 10	1 · 2	1 · 4	1 · 8
≤ 15	1 · 3	1 · 6	1 · 12
≤ 20	1 · 4	1 · 8	2 · 16
≤ 40	1 · 8	2 · 16	—

2.4 What is in the box

The cabinet and the modules are packed separately: the cabinet in a honeycomb carton on a wooden pallet, each module in its own carton. Check the delivery against the packing list (Section 3.6.1).

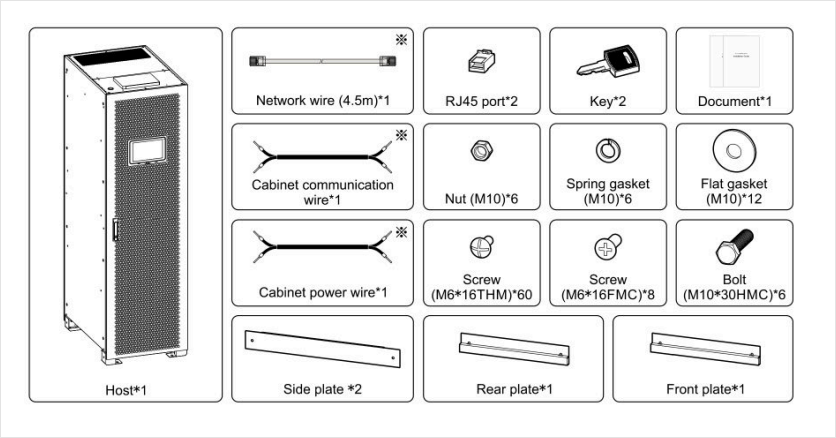

FIGURE 2-2 Packing list of a cabinet — the master cabinet is shown

TABLE 2-8 Contents of the cabinet package

Item	Quantity	Note
L6 cabinet ("Host")	1	Master (touchscreen) or slave (indicator panel)
Network cable, 4.5 m	1	Cabinet-to-cabinet network link
RJ45 connectors	2	For the network and RS485 cables
Keys	2	Front door
Documents	1 set	
Cabinet communication cable	1	Marked ※ on the packing list: supplied with slave cabinets
Cabinet power cable	1	Marked ※: supplied with slave cabinets (auxiliary supply link)
Nuts M10 · spring washers M10 · flat washers M10	6 · 6 · 12	Floor anchoring
Bolts M10 × 30	6	Cabinet-to-cabinet joining
Screws M6 × 16 (two types)	60 · 8	Panels and modules
Side plates · rear plate · front plate	2 · 1 · 1	Bottom plates (base covers)

2.5 Single cabinet and multi-cabinet systems

One cabinet takes up to 20 modules of 40 Ah or 50 Ah, or up to 12 modules of 100 Ah. For more modules, use several cabinets in parallel: up to 15 cabinets in one system. One cabinet is the master; the others are slaves. With several cabinets, the L6-COMBINER can collect their outputs into one connection to the UPS (Section 2.14.1).

FIG
2-
3 S
cab
(ma

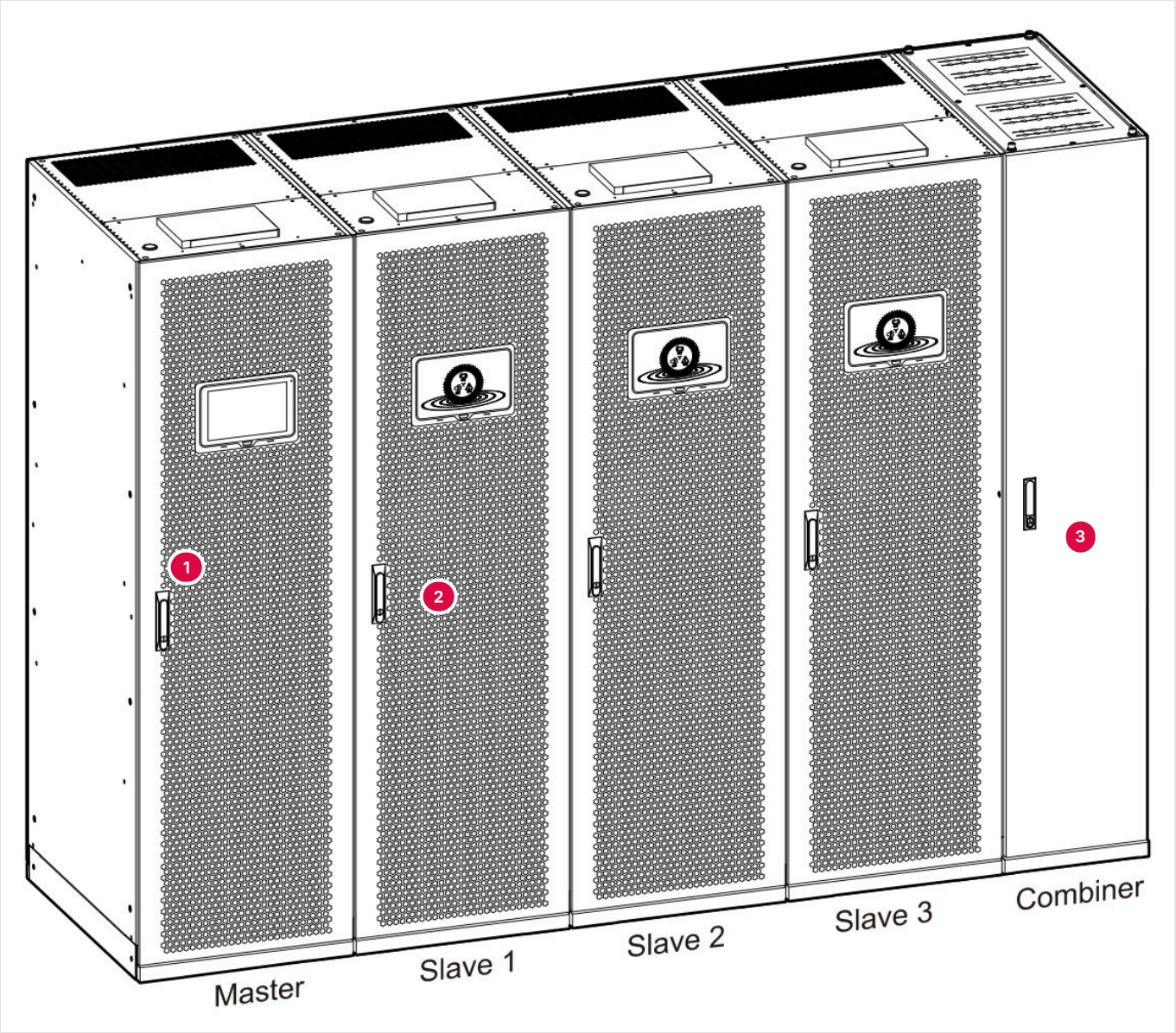

1. Master cabinet (touchscreen)
2. Slave cabinets (indicator panel)
3. L6-COMBINER combiner cabinet

FIGURE 2-4 Multi-cabinet system — master, slaves and combiner

i NOTE The slave cabinets and the combiner can stand to the right or to the left of the master, as the site requires. The pictures of this manual show them to the right.

2.6 Front of the master and slave cabinets



1. Touchscreen (MBMU), master cabinet only (Section 2.7)
2. Screen button, under the touchscreen
3. Indicator panel, slave cabinets only (Section 2.8)
4. Door handle with key lock (master)
5. Door handle with key lock (slave)
6. Perforated front door: cooling air in

FIGURE 2-5 Master cabinet (left) and slave cabinet (right), doors closed

The front door opens to the right. Behind it are the battery breakers, the control box and the modules (Section 2.9).

2.7 Touchscreen (MBMU)

The master cabinet has the 10-inch color touchscreen of the system controller (MBMU). It shows the cabinets, modules and cells, the alarms and the records, and holds the settings of the system.

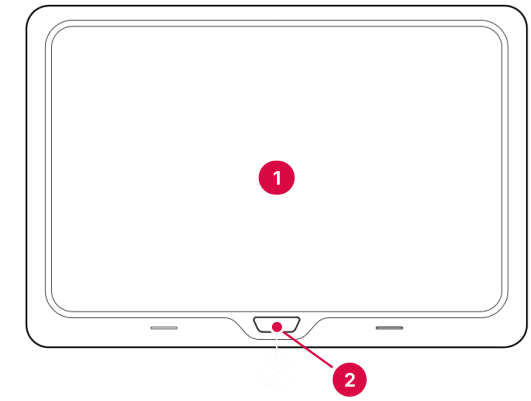

1. Touch panel: the operator interface
2. Screen button — press gently: screen on or off · press and hold: restart the screen

FIGURE 2-6 Touchscreen panel of the master cabinet

i NOTE For the touchscreen pages, the login and every setting, see the **L6 Lithium Touchscreen (MBMU) User Manual, AEC-UM-L6T-EMEA**. The settings are reserved to authorized personnel.

2.8 Indicator panel (slave cabinets)

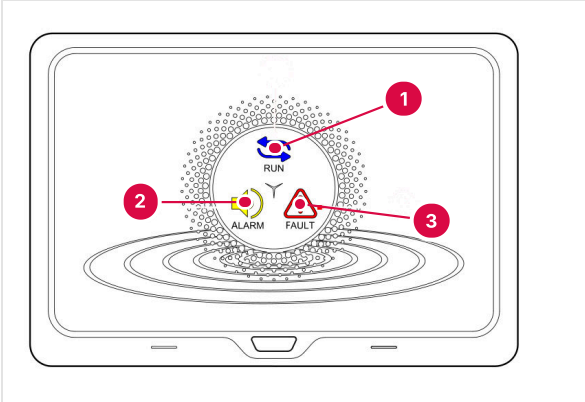

1. RUN indicator, blue
2. ALARM indicator, yellow
3. FAULT indicator, red

FIGURE 2-7 Indicator panel of a slave cabinet

TABLE 2-9 Indicator panel

No.	Indicator	Color	Meaning
1	Run	Blue	On: the system runs normally. Off: there is an alarm or a protection.
2	Alarm	Yellow	On: a module is in alarm or protected. Off: the system is normal, or in fault.
3	Fault	Red	On: system fault. Off: the system is normal, or in alarm.

2.9 Inside the cabinet

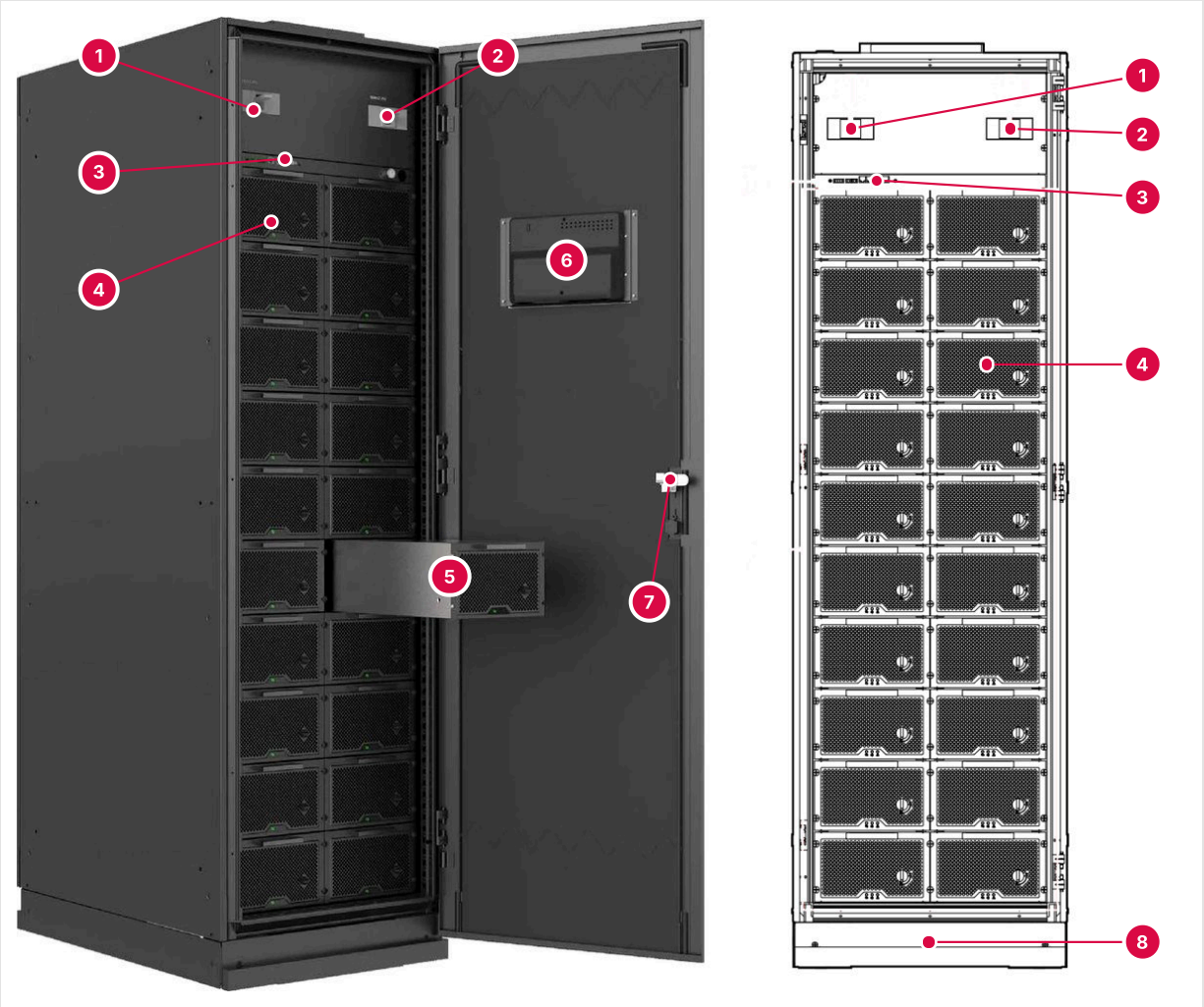

1. Battery breaker 1
2. Battery breaker 2
3. Control box (communication module)
4. Battery modules, 2 columns × 10 rows, 50 Ah
5. Module drawn out of its slot
6. Back of the touchscreen, on the door
7. Door lock
8. Base with removable bottom plates

FIGURE 2-8 Cabinet with the door open (left, master) and layout of a full cabinet (right)

TABLE 2-10 Parts inside the cabinet

No.	Part	What it does
1	Battery breaker 1	Connects the first group of modules to the DC output (Figure 2-21).
2	Battery breaker 2	Connects the second group of modules to the DC output. Both breakers are opened and closed together in every procedure.
3	Control box	Auxiliary supply, EPO, CAN, network and RS485 ports (Section 2.11).
4	Battery modules	Up to 20 × L6-MOD-50LI, fitted from the bottom up. Empty slots get a blank panel (Section 2.14).

The DC output busbars (+, N, −) and the ground bar are at the top of the cabinet, under the top plate (Section 3.12.1).

Figure 2-9 shows how a full cabinet is built: the battery breakers on the wiring plate at the top, the control box right under them, and the 20 module slots below, in two columns of ten. Each module slides out to the front like a drawer. Figure 2-10 shows the module layout: a part-filled cabinet is filled from the bottom row up, and every empty slot gets a blank panel.



1	Top cable entry: all cables enter from the top
2	Battery breaker 1
3	Battery breaker 2
4	Control box: auxiliary supply, EPO, CAN, LAN, RS485 (Section 2.11)
5	Battery modules, 2 columns × 10 rows
6	Module drawn out of its slot
7	Back of the touchscreen, on the door
8	Door handle with key lock
9	Base with removable bottom plates

FIGURE 2-9 Illustration from the AEC 3D model: full cabinet, door open, one module drawn out



1. Battery breaker 1
2. Battery breaker 2
3. Control box
4. Left column, 10 modules
5. Right column, 10 modules

FIGURE 2-10 Illustration: 20 modules (L6-CAB-20x50LI)



6. Modules in the bottom five rows: fit from the bottom up
7. Blank panels in the empty slots

FIGURE 2-11 Illustration: 10 modules (L6-CAB-10x50LI)

2.9.1 Cabinet versions: 40, 50 and 100 Ah

The same 600 × 850 × 2,000 mm cabinet comes in two versions. The 40 Ah and 50 Ah version takes up to 20 modules in two columns, as described above. The 100 Ah version (L6-100) takes up to 12 modules of 100 Ah in one column (Figure 2-12). Both have the battery breakers and the cabinet BMS with the communication module at the top, and the touchscreen (master) or the indicator panel (slave) on the door.

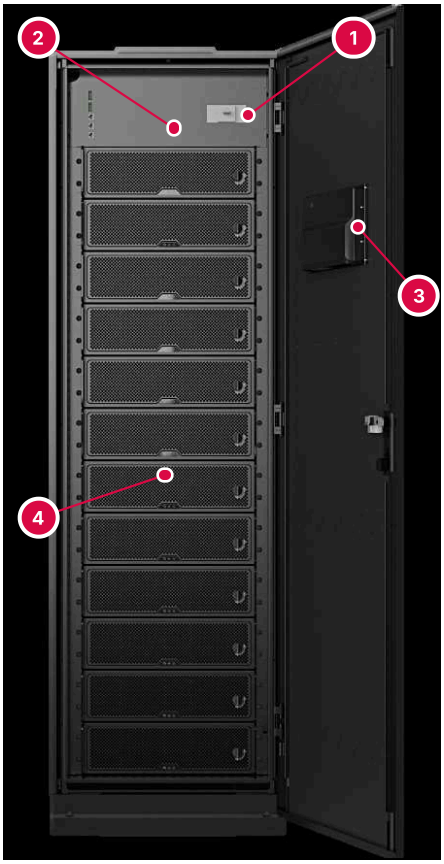

1. Battery breaker
2. Cabinet BMS and communication module
3. Touchscreen (master cabinet), on the door
4. Battery modules, 100 Ah, one column of 12

FIGURE 2-12 L6-100 cabinet, door open: 12 modules of 100 Ah in one column

TABLE 2-11 Cabinet versions

	40 Ah	50 Ah	100 Ah
Modules per cabinet, maximum	20	20	12
Module layout	2 columns	2 columns	1 column
Energy per full cabinet	46 kWh	58 kWh	69 kWh
Rated power per full cabinet	200 kW	200 kW	60 kW
Weight with full modules	965 ± 20 kg (M1: 955 ± 20 kg)	985 ± 20 kg (M1: 975 ± 20 kg)	810 ± 24 kg

2.10 Battery module

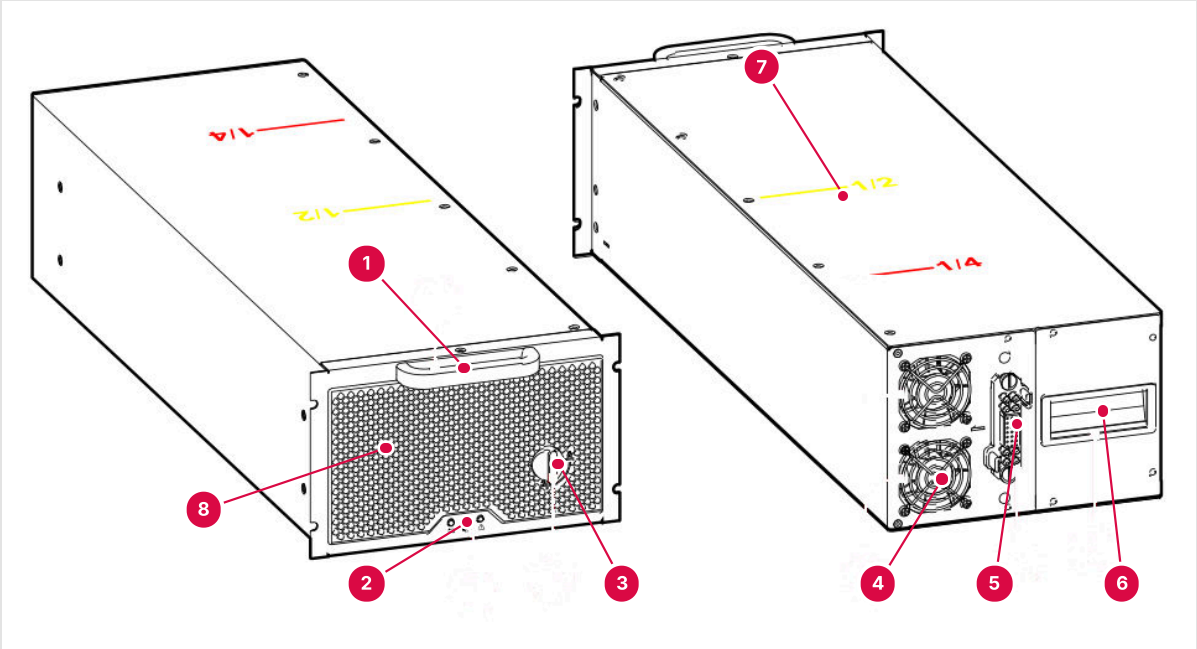

1	Front handle	5	Output connector, mates with the cabinet
2	Indicators: run, alarm, fault (Table 2-13)	6	Rear handle
3	ON/OFF knob, also the slot lock (Section 2.10.1)	7	Position marks on top: yellow 1/2 and red 1/4
4	Fans (2)	8	Front grille: air in

FIGURE 2-13 L6-MOD-50LI battery module — front (left) and rear (right)

Each module holds LiFePO4 cells (50 Ah, 2.88 kWh), its own BMS (PBMU) and a bidirectional DC/DC converter. It weighs 37 ± 1 kg: two people carry it.

Position marks. The marks on top of the module tell how far it is out of its slot. Yellow **1/2**: half of the module is out — slow down. Red **1/4**: only a quarter is still in the cabinet — hold it with both hands, or with two people, so it cannot fall.

2.10.1 ON/OFF knob

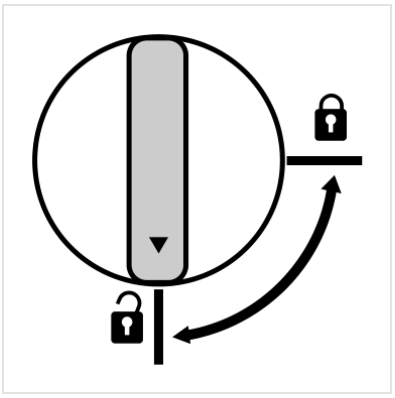

FIGURE 2-14 ON/OFF knob — shown at OFF (unlocked); turn it toward the locked symbol for ON

TABLE 2-12 ON/OFF knob positions

Knob position	Module
OFF — unlocked symbol	Not locked in the cabinet: it can be removed. No output.
ON — locked symbol	Locked in the cabinet: it cannot be removed. It starts automatically and its output carries DC voltage.

> ⚠ ***CAUTION***
>
> At ON the module starts by itself and its output is live. Keep every knob at OFF while you move, fit or remove a module.

2.10.2 Module indicators

The three indicators under the grille are Run (green arrows), Alarm (yellow speaker) and Fault (red triangle).

TABLE 2-13 Module indicator states

State	Run (green)	Alarm (yellow)	Fault (red)
Charge	On	Off	Off
Discharge	Flashes once a second	Off	Off
Sleep	On	Flashes once every 3 s	Off
OFF	Off	Flashes once every 3 s	Off
Module alarm	Any	On	Off
Communication fault	Any	Flashes once a second	Any
Module protection	Off	Off	On
Battery fault	Off	Off	Flashes once a second

"Any" means the indicator can be in any state. At start-up the three indicators flash together for about 10 seconds (self-test).

2.10.3 40 Ah and 100 Ah modules

40 Ah module. It has the same size, front, knob, indicators and slot as the 50 Ah module (223 × 665 × 152 mm) and fits the same two-column cabinet. It uses 6C cells for high power and short backup: 2.3 kWh, DC/DC output 10 kW, 36 ± 1 kg.

100 Ah module. It uses 1C cells for backup times of one to four hours: 5.76 kWh, DC/DC output 5 kW. It is wider and lower (440 × 665 × 132 mm), weighs 52 ± 1 kg and fills the 12-slot 100 Ah cabinet, in one column. Its parts: front handle, indicators, in-place switch (the ON/OFF knob), one fan and the power and signal connector at the rear, and side handles (Figure 2-15).

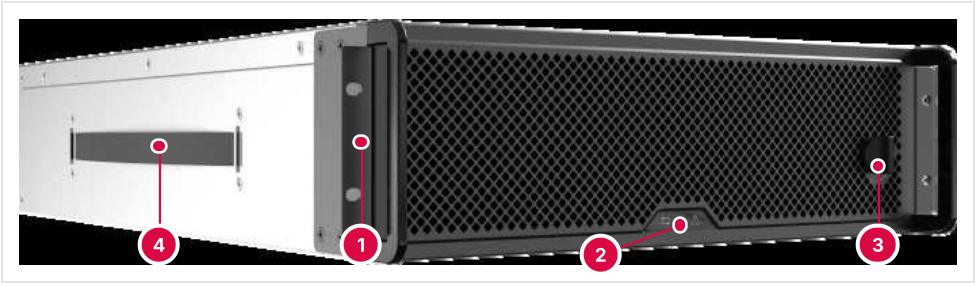

1. Front handle
2. Indicators: run, alarm, fault (Table 2-13)
3. In-place switch (ON/OFF knob): locks the module and starts its output (Section 2.10.1)
4. Side handle

FIGURE 2-15 100 Ah battery module, front

WARNING

A 100 Ah module weighs 52 ± 1 kg: lift it with two people, or with a lifting platform.

2.11 Control box ports

The control box sits under the battery breakers (Figure 2-8, item 3; Figure 2-17). It carries every external signal connection of the cabinet.

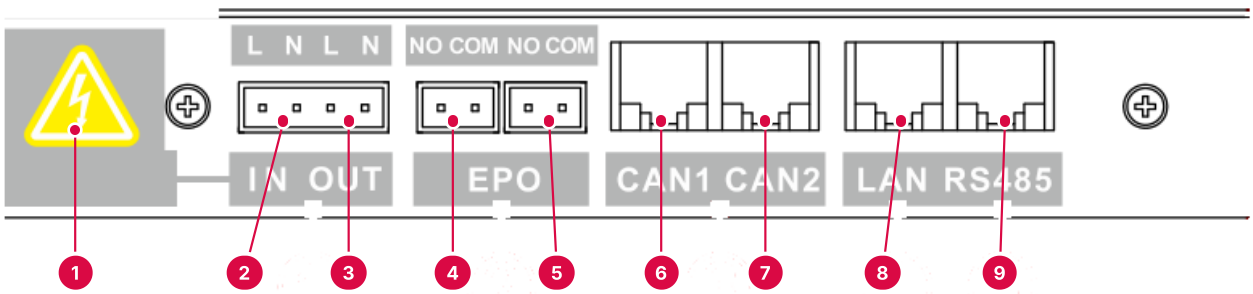

1. Warning label: hazardous voltage
2. AC IN (L, N): auxiliary supply in
3. AC OUT (L, N): auxiliary supply out to the next cabinet
4. EPO left (NO, COM): external EPO switch, or link from the previous cabinet
5. EPO right (NO, COM): link to the next cabinet
6. CAN1
7. CAN2
8. LAN (RJ45): network
9. RS485 (RJ45): to the UPS

FIGURE 2-16 Ports of the control box

TABLE 2-14 Control box ports

No.	Port	Silk-screen	Use
2	Auxiliary supply in	AC IN · L, N	160–300 V AC input that powers the touchscreen and the BMS of the cabinet.
3	Auxiliary supply out	AC OUT · L, N	160–300 V AC output, linked to AC IN: feeds AC IN of the next cabinet.
4	EPO, left	EPO · NO, COM	Master: the external EPO switch. Slave: the link from the right EPO terminal of the previous cabinet, so that all cabinets share one EPO switch.
5	EPO, right	EPO · NO, COM	Link to the left EPO terminal of the next cabinet.
6–7	CAN	CAN1 · CAN2	Reserved for cabinet and external CAN communication. Not used.
8	Network	LAN	Monitoring computer, and the cabinet-to-cabinet network through the networking device. Pin-out: Figure 2-19.
9	RS485	RS485	Communication with the UPS (BMS expansion card of the IST6). Pin-out: Figure 2-18.

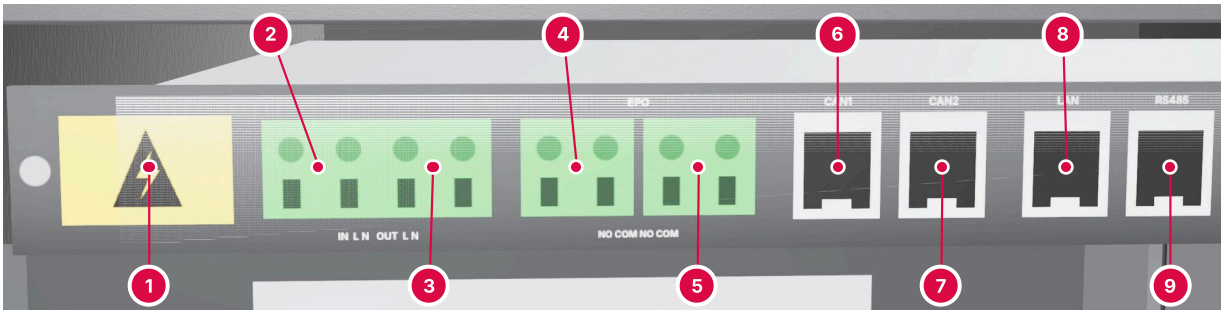

1. Warning label: hazardous voltage
2. AC IN (L, N): auxiliary supply in
3. AC OUT (L, N): auxiliary supply out
4. EPO left (NO, COM)
5. EPO right (NO, COM)
6. CAN1 (not used)
7. CAN2 (not used)
8. LAN (RJ45): network
9. RS485 (RJ45): to the UPS

FIGURE 2-17 Illustration: the control box in the cabinet, under battery breaker 1 (door open)

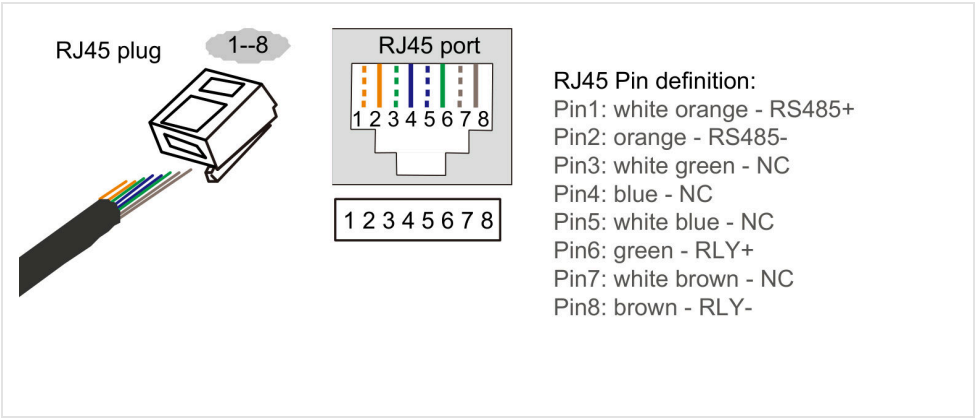

FIGURE 2-18 RS485 port — RJ45 pin-out

TABLE 2-15 RS485 port, RJ45 (T568B colors)

Pin	Wire color	Signal
1	White-orange	RS485+
2	Orange	RS485−
3, 4, 5, 7	White-green, blue, white-blue, white-brown	Not connected
6	Green	RLY+ (relay contact)
8	Brown	RLY− (relay contact)

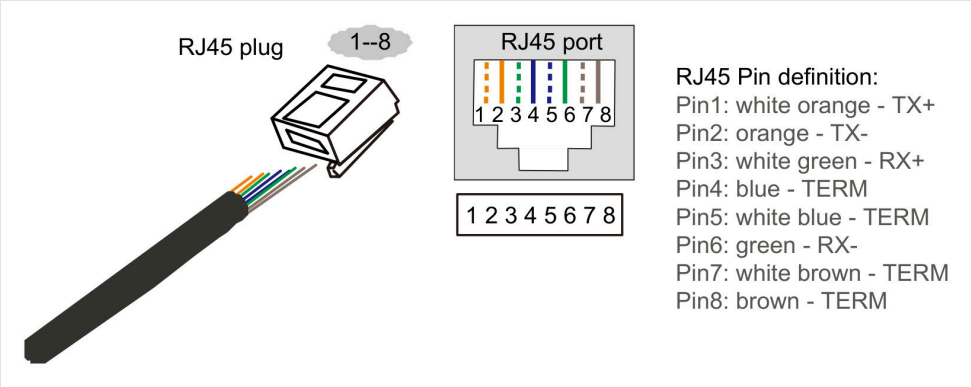

FIGURE 2-19 LAN port — RJ45 pin-out

TABLE 2-16 LAN port, RJ45 (T568B colors)

Pin	Wire color	Signal
1	White-orange	TX+
2	Orange	TX−
3	White-green	RX+
6	Green	RX−
4, 5, 7, 8	Blue, white-blue, white-brown, brown	Termination

2.12 Airflow

Air enters through the front door and leaves at the rear. If the top cover plate with holes is removed, air can also leave through the top. Every L6 cabinet cools the same way.

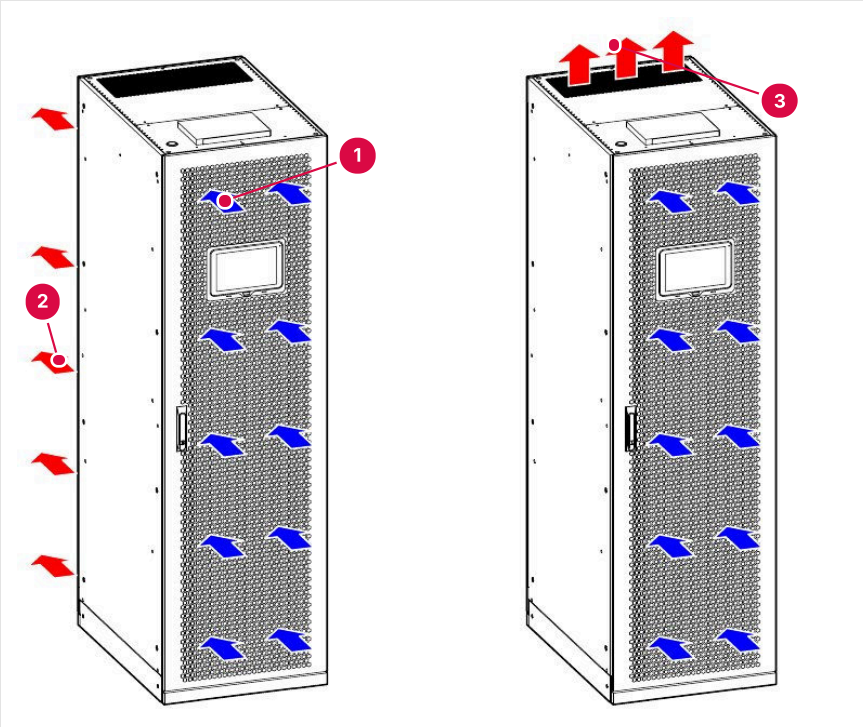

1. Air in through the front door
2. Air through the modules, front to rear
3. Air out through the top, top cover plate removed

FIGURE 2-20 Airflow — front in, rear out (left) or front in, top out with the top cover plate removed (right)

⚠ CAUTION

Keep the air inlets, outlets and fans clear, and keep the room ventilated around the cabinets.

2.13 How the system works

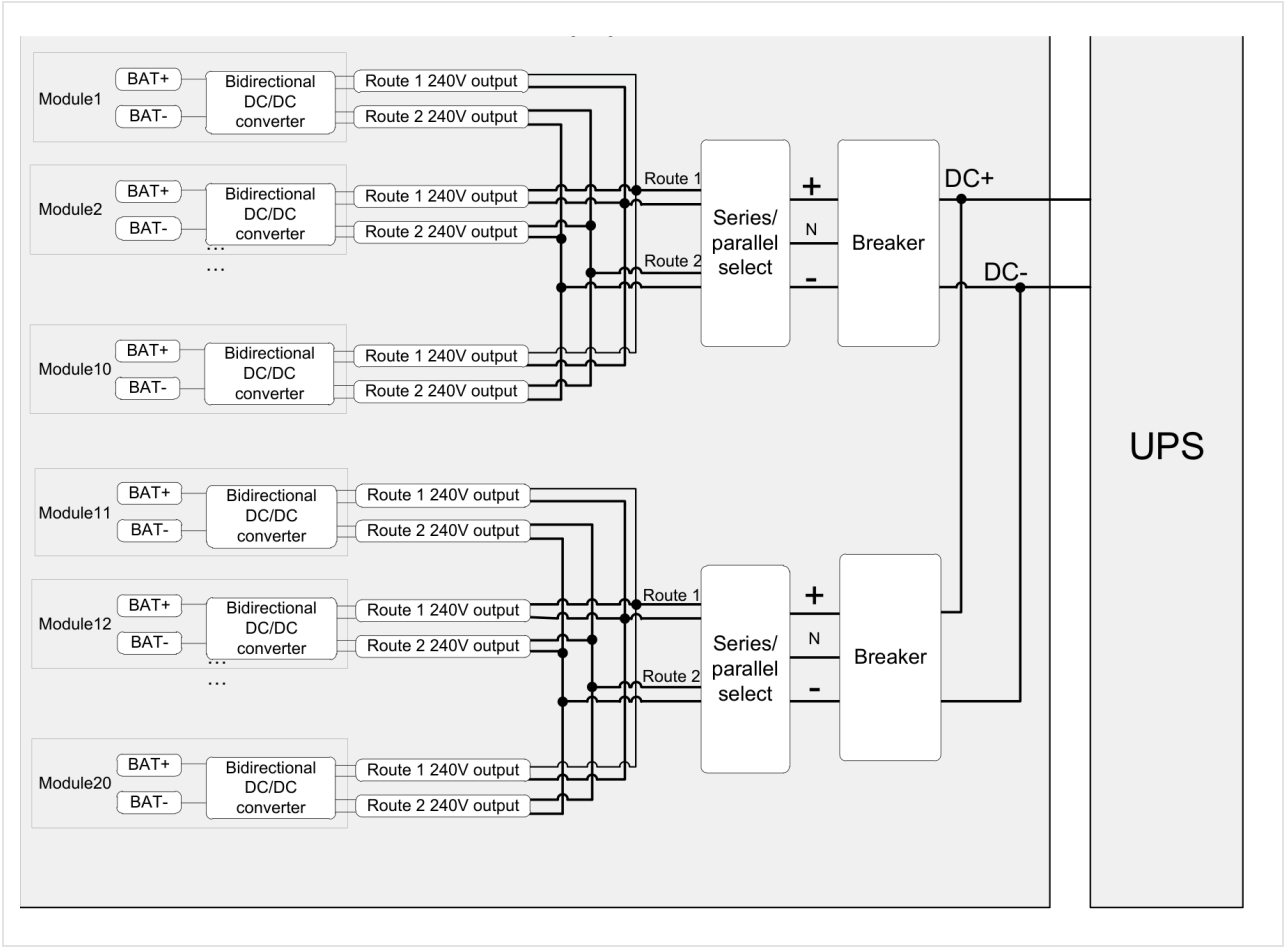

FIGURE 2-21 Principle diagram of one cabinet — two groups of modules, each with its breaker

Each module has two 240 V outputs ("Route 1" and "Route 2"). Inside the cabinet the routes of a group of modules are set **in series or in parallel**, and a battery breaker connects each group to the DC output: +, N and −. The result is one of three output systems: 240 V DC, ±240 V DC (with a midline N) or 480 V DC. **The output system must match the battery input of the IST6** (Table 2-1): AEC sets it for each system.

TABLE 2-17 Operating modes

Mode	What happens
Charge	The UPS mains input is normal and the modules need charge. Each DC/DC converter steps the UPS charge voltage (265 V / ±265 V / 530 V DC) down and charges its cells at constant current, then at limited voltage.
Sleep	The mains is normal and the modules are full. They neither charge nor discharge, until the battery voltage or the SOC falls below the set value; then they charge again.
Discharge	The UPS mains input fails. From charge or sleep, the system goes to discharge: each DC/DC converter boosts the cell voltage to 240 V / ±240 V / 480 V DC and feeds the UPS.

2.14 Options

2.14.1 Combiner cabinet (L6-COMBINER)

The combiner cabinet collects the DC outputs of several L6 cabinets on one set of busbars, and feeds the UPS from there. This manual describes the 8-cabinet model, L6-COMBINER (L6-C-4000). A 4-cabinet model, L6-C-2000 (2,000 A), is available on request.

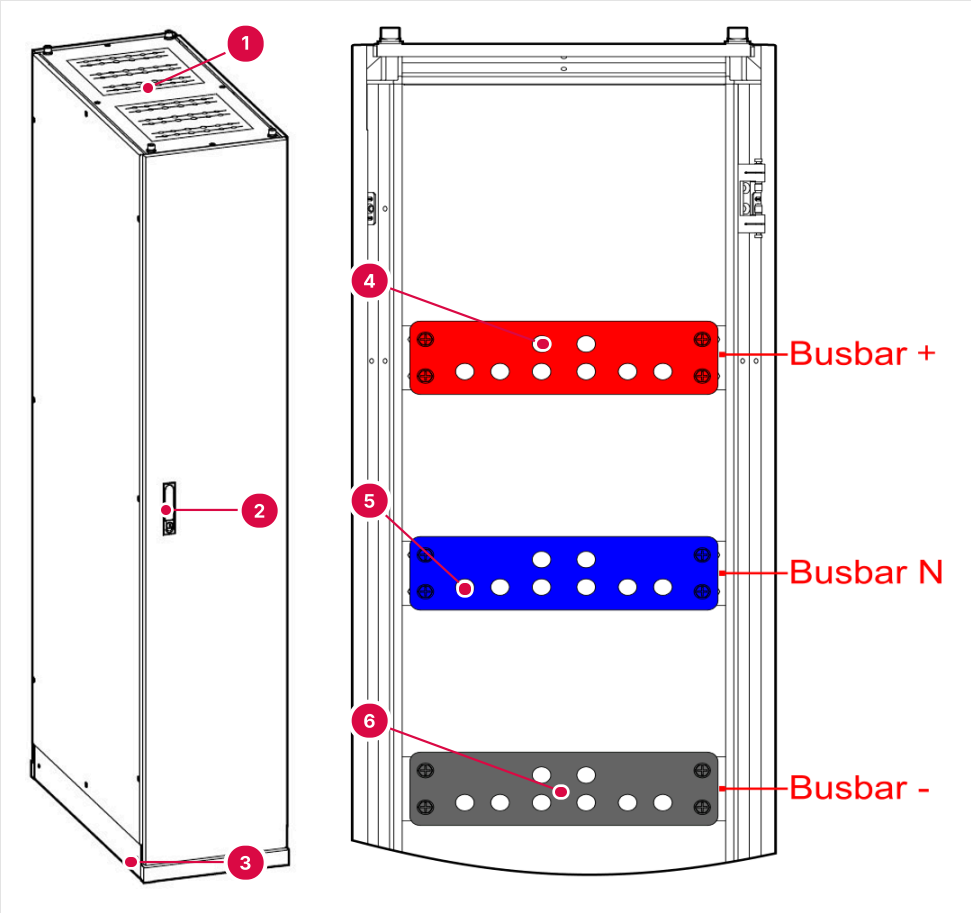

1. Top: cable entry from the cabinets
2. Door handle
3. Base: bottom cable exit to the UPS
4. Middle holes, 2 per busbar: cables to the UPS
5. Outer holes, 4 per busbar: cables from the cabinets
6. Busbars from the top: +, N, –

FIGURE 2-22 L6-COMBINER (left) and its busbars with the front door open (right)

TABLE 2-18 L6-COMBINER

Item	Value
Model	L6-C-4000
Cabinets per combiner	Up to 8
Maximum output current	4,000 A
Size W × D × H	400 × 850 × 2,000 mm

Item	Value
Weight	140 kg
Cables to the UPS	From the top or from the bottom

2.14.2 Networking device

The networking device links the network of several cabinets. It has 8 network ports and serves up to 7 cabinets. Above 7 cabinets, add a second networking device (Section 3.12.4).

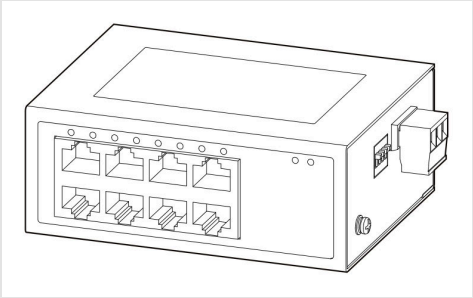

FIGURE 2-23 Networking device

2.14.3 Blank panel

A blank panel closes every slot without a module (for example the ten upper slots of an L6-CAB-10×50LI). The 100 Ah cabinet has its own blank panel, of the size of a 100 Ah module. A blank panel is fitted like a module (Section 3.8).

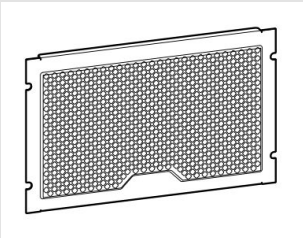

FIGURE 2-24 Blank panel for an empty module slot

2.14.4 In-row rear frame

The in-row rear frame makes the cabinet deeper, so that it lines up with a modular UPS or with IT racks in a row (Section 3.10).

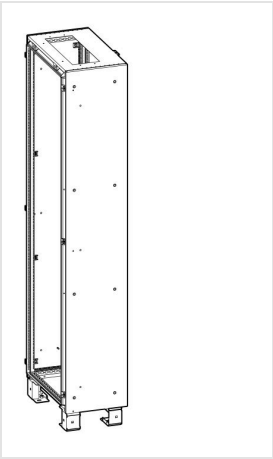

FIGURE 2-25 In-row rear frame

03

CHAPTER 3

Installation

Site, cables, moving and fixing the cabinets, fitting the modules and the options, joining several cabinets, power, auxiliary supply, EPO and communication wiring, and the final check.

⚠ CAUTION

Only trained personnel qualified for high-voltage DC and AC work may install the L6 system. Install it only on concrete or another non-combustible floor.

3.1 Installation sequence

1. Check that the delivery is complete (Section 3.6.1). If you do not install it now, store it (Section 6.3).
2. Choose the site (Section 3.3, Section 3.4).
3. Install the cabinets and the modules (Section 3.7, Section 3.8, Section 3.11).
4. Make the electrical connections (Section 3.12).
5. Check the installation before commissioning (Section 3.13).
6. Start the system (Section 4.3). If it does not run normally, see Section 5.5.

3.2 Tools

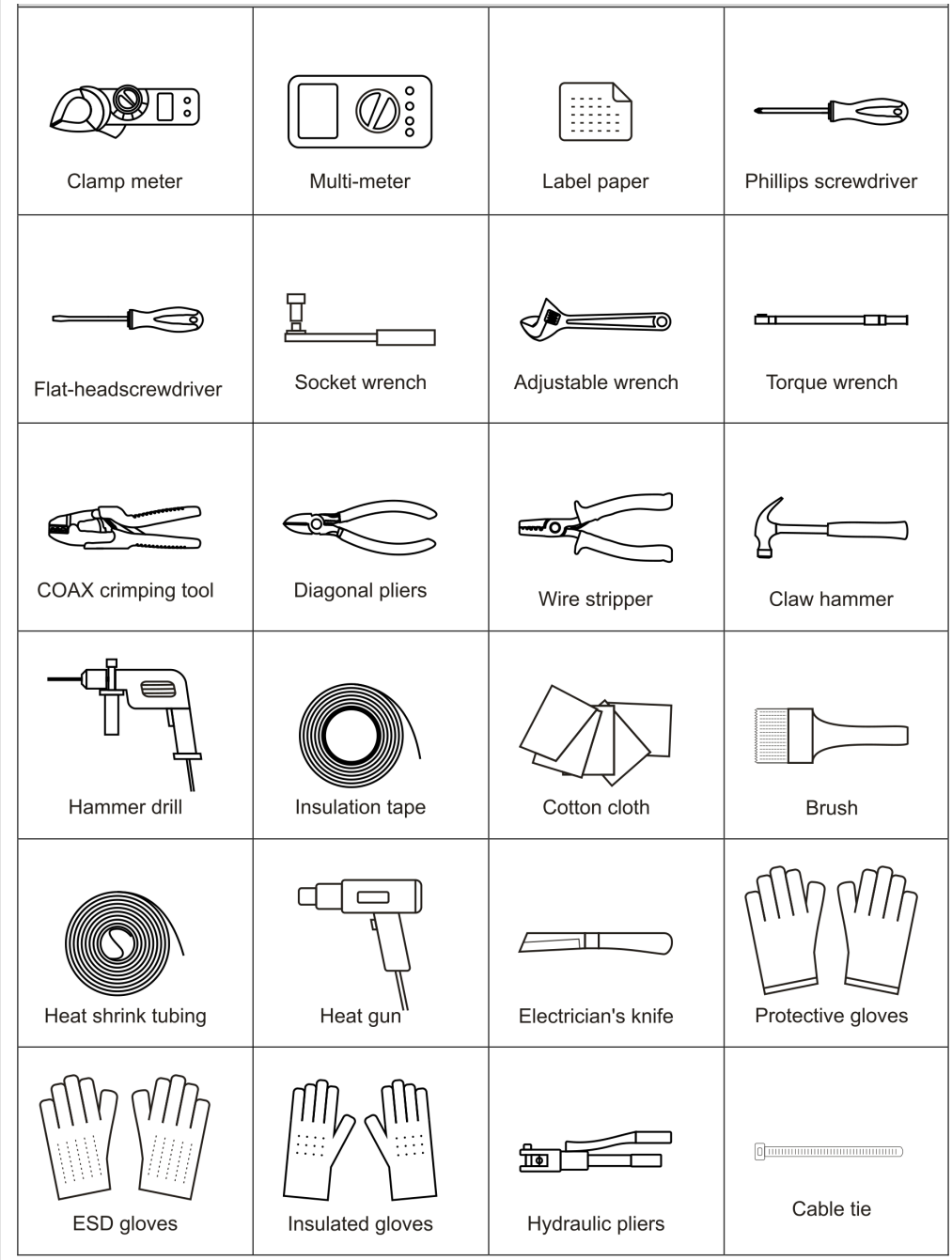

FIGURE 3-1 Installation tools

The tools are: clamp meter, multimeter, label paper, Phillips and flat screwdrivers, socket wrench, adjustable wrench, torque wrench, crimping tool, diagonal pliers, wire stripper, claw hammer, hammer drill, insulating tape, cotton cloth, brush, heat-shrink tubing, heat gun, electrician's knife, protective gloves, ESD gloves, insulated gloves, hydraulic crimping pliers and cable ties.

CAUTION

Use insulated tools only, to avoid electric shock.

3.3 Site and environment

DANGER

Do not install or operate the L6 system where flammable or explosive gas or smoke is present. Operating electrical equipment in such an atmosphere is extremely dangerous.

The environment affects the life and reliability of the system. Install it:

- Indoors, never in the open air, out of direct sunlight.
- At 0–40 °C and 5–95 % relative humidity, non-condensing.
- Below 4,000 m. Above 2,000 m the rated power is derated according to IEC 62040-3.
- In a well-ventilated room, away from water, heat sources and flammable or explosive materials.
- Away from dust, volatile gases, corrosive materials and salt air. Never where conductive metal dust is present.
- On a DC system within the input limits of the L6: at most 300 V DC (parallel mode); at most 300 V DC from + to N and from N to – (series mode with midline); at most 600 V DC (series mode without midline).

CAUTION

The best battery temperature is 20–30 °C. Above 30 °C the battery life is shorter. Below 20 °C the runtime is shorter.

3.4 Working space and clearances

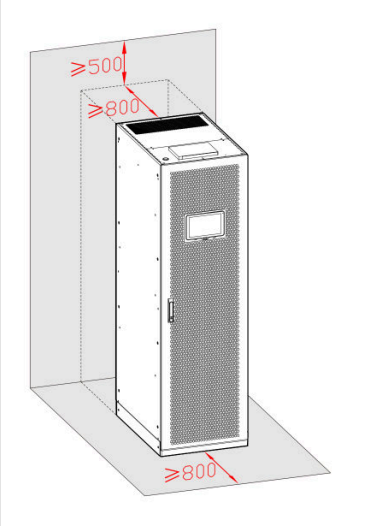

FIGURE 3-2 Minimum clearances, in mm

- **Front:** at least 800 mm free, for the door, the modules and the airflow.
- **Rear:** at least 800 mm to the wall, for the air outlet.
- **Top:** at least 500 mm to the ceiling.
- Keep also the working space required by IEC 60364 and the local regulations in front of the cabinets.

- Several cabinets in a row need the same clearances. Keep the vents clear: blocked vents raise the temperature inside and shorten the battery life.

3.5 Cables and terminals

The DC cables between the L6 cabinets and the UPS (or the combiner), and between the combiner and the UPS, are supplied by the customer. Use copper conductors. The sizes below are AEC recommendations for cables of about 5 m.

TABLE 3-1 DC output cables of one cabinet (recommended, cable about 5 m)

Conductor	L6-40 and L6-50 cabinet	L6-100 cabinet
Positive (+)	2 × 120 mm², lug DT120	1 × 50 mm², lug DT50
Negative (–)	2 × 120 mm², lug DT120	1 × 50 mm², lug DT50
Midline (N) — only with a midline (Section 2.2)	2 × 120 mm², lug DT120	1 × 50 mm², lug DT50
Ground (PE)	1 × 50 mm², lug DT50	1 × 25 mm², lug DT25
Busbar capacity, + N –	2 cables of 120 mm² at most	2 cables of 95 mm² at most

TABLE 3-2 Combiner to UPS — L6-40 and L6-50 (per pole)

UPS power	Cable	Lug
200 kVA	1 × 240 mm²	DT240
300 kVA	2 × 240 mm²	DT240
400 kVA	2 × 240 mm²	DT240
500 kVA	3 × 240 mm²	DT240
600 kVA	3 × 240 mm²	DT240
800 kVA	4 × 240 mm²	DT240
1,000 kVA	5 × 240 mm²	DT240
1,200 kVA	6 × 240 mm²	DT240

TABLE 3-3 Combiner to UPS — L6-100 (per pole)

UPS power	Cable	Lug
60 kVA	1 × 50 mm²	DT50
80 kVA	1 × 70 mm²	DT70
100 kVA	1 × 95 mm²	DT95
120 kVA	1 × 120 mm²	DT120
160 kVA	1 × 150 mm²	DT150
200 kVA	1 × 240 mm²	DT240

⚠ WARNING · Cable sizing

The sizes above are AEC recommendations for cables of about 5 m. A qualified electrician sizes and checks every DC conductor for the actual installation to IEC 60364-5-52 and the local regulations (installation method, grouping, ambient temperature, length and protection). For cables longer than 5 m, ask AEC for the cable size.

⚠ CAUTION

Each busbar of the combiner takes at most 4 cables of 240 mm². In the 8-cabinet combiner each pole has 2 busbars: share the cables between them according to the number of modules on each cabinet.

i NOTE Cables supplied by AEC are certified. If you buy cables yourself, use the sizes above for cables of about 5 m; for longer cables, ask AEC.

3.6 Transport and unpacking

⚠ CAUTION

- Only trained personnel move the L6 system. Avoid shocks and falls.
- If the system will be stored for a long time after unpacking, repack it in its original packaging.

Move the packed cabinet with an electric forklift or a manual pallet jack.

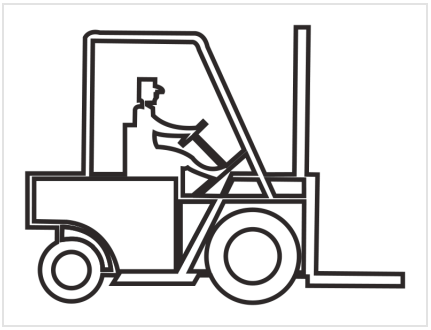

FIGURE 3-3 Electric forklift

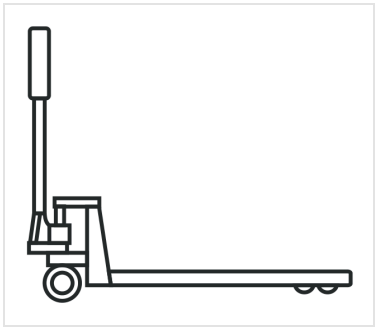

FIGURE 3-4 Manual pallet jack

⚠ CAUTION

Keep the cabinet balanced and upright while you lift and move it. Do not set it down or lift it suddenly.

3.6.1 Unpacking

1. Check the packaging for transport damage. If it is damaged, tell the carrier at once.
2. Move the packed cabinet to the installation site.
3. Remove the outer packaging, the foam pads and the plastic bag. Take out the accessories.
4. Inspect the cabinet for transport damage; report damage to the carrier at once. Check the accessories against the packing list (Figure 2-2, Table 2-8); report missing or wrong items to AEC.
5. Unscrew the bolts that fix the cabinet to the pallet with a wrench (Figure 3-5).

⚠ CAUTION

To avoid tilting, keep the center of gravity of the cabinet between the forklift arms, and let the arms reach beyond the far side of the pallet.

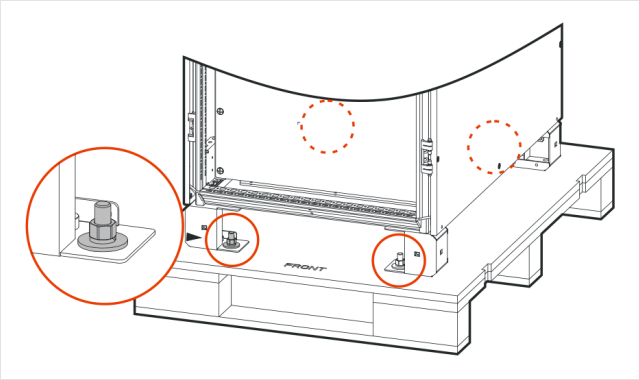

FIGURE 3-5 Bolts that fix the cabinet to the pallet (circled)

3.7 Installing a cabinet

1. Choose the location from the cabinet size (Figure 3-6) and the clearances (Section 3.4).
2. Drill 4 holes of 14 mm diameter in the floor at the fixing holes of the cabinet (Figure 3-7). On a U-channel steel base, drill the 4 holes as in Figure 3-8.
3. Fit the expansion anchors (Figure 3-9). The anchor sleeve must sit fully in the hole, not above the floor. The anchor bolts must stand 30–50 mm above the floor.
4. Move the cabinet onto the anchors. Fit the spring washers and flat washers and tighten the nuts.
5. Refit the bottom plates of the cabinet (Figure 3-10). With several cabinets, fit the bottom plates only after the cabinets are joined (Section 3.11).

⚠ CAUTION

Move the cabinet with the forklift arms inserted from the side of the cabinet, with its center of gravity between the arms.

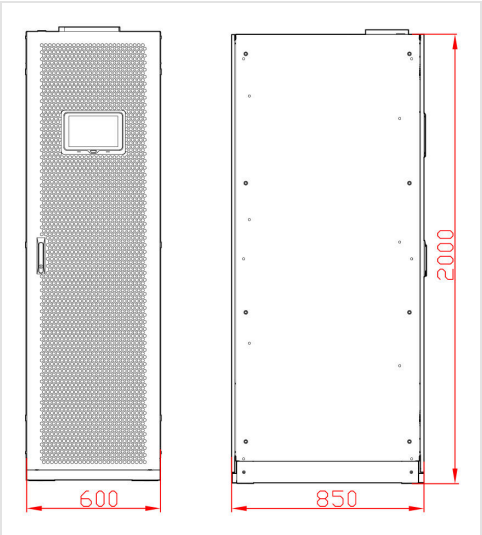

FIGURE 3-6 Cabinet size, mm (600 × 850 × 2,000)

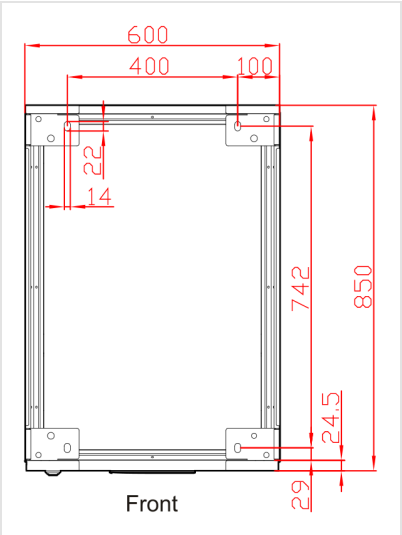

FIGURE 3-7 Floor fixing holes, mm, seen from above

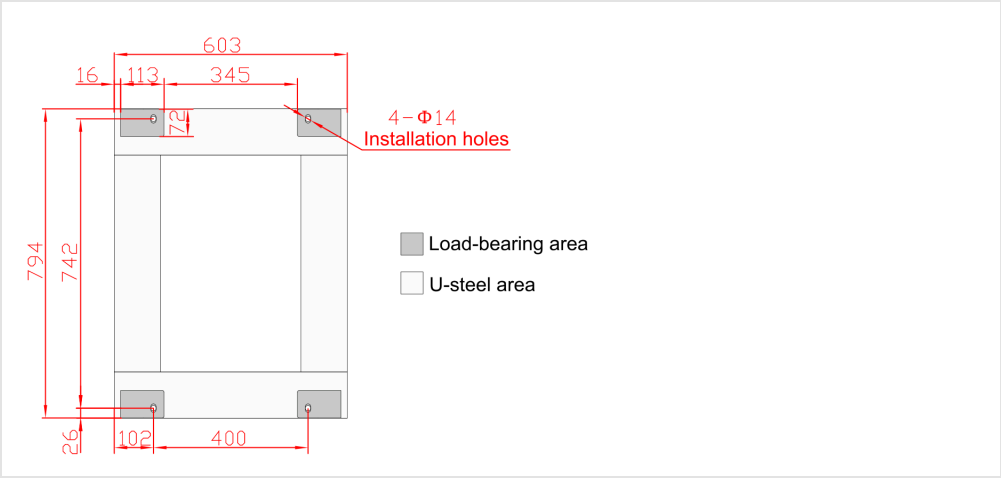

FIGURE 3-8 U-channel steel base, mm — 4 holes of 14 mm

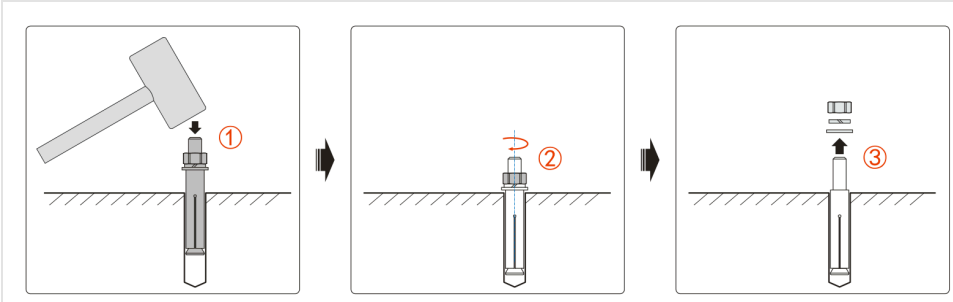

FIGURE 3-9 Fitting an expansion anchor — drill, drive in the sleeve, fit the bolt

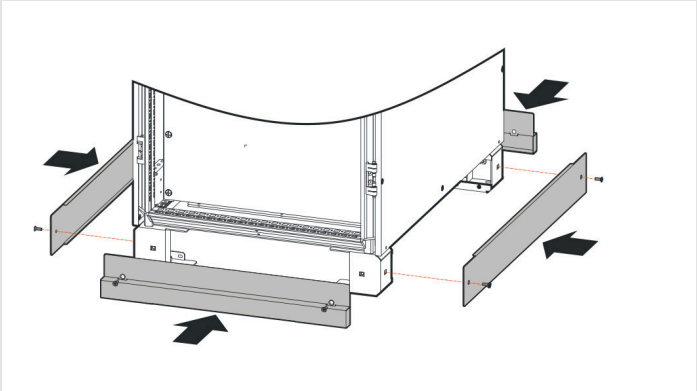

FIGURE 3-10 Refitting the bottom plates

i NOTE To fit the rear bottom plate, first remove the rear cover plate of the cabinet.

3.8 Fitting the battery modules

The modules ship in their own cartons and are fitted on site.

1. Take the module out of its carton.
2. Check that the knob is at **OFF** (unlocked, Figure 2-14).
3. Slide the module into the lowest free slot (Figure 3-11). Fit the modules from the bottom up.
4. Fix the module with its screws (Figure 3-12).
5. Fit a blank panel in every empty slot.
6. Leave every knob at OFF until the power-on test (Section 4.3).

In an L6-100 cabinet the 12 modules of 100 Ah sit in one column: fit them the same way, from the bottom up.

⚠ CAUTION

- A module weighs 37 ± 1 kg (40 Ah: 36 ± 1 kg; 100 Ah: 52 ± 1 kg): carry it with two people.
- A module is dangerous goods: carry it gently, do not knock or drop it.
- Do not force the module into the slot: you can damage the rear connector.
- Above 1 m from the floor, use a lifting platform.

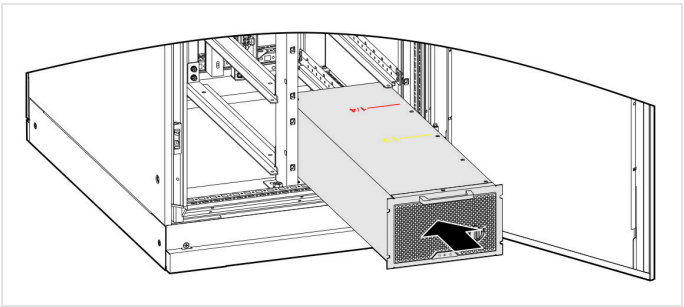

FIGURE 3-11 Sliding a module into its slot

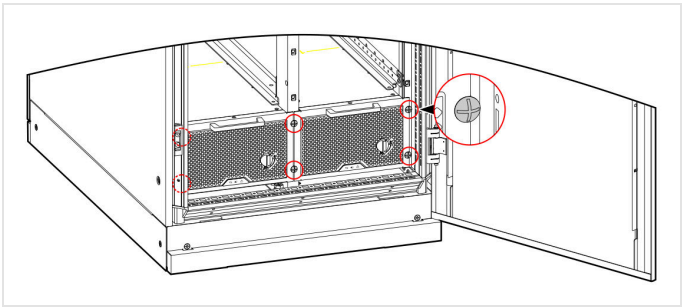

FIGURE 3-12 Fixing the module with its screws (circled)

To remove a module: set its knob to OFF, then pull it out by its handle. Watch the marks on top (Section 2.10): at the yellow 1/2 slow down; at the red 1/4 hold it with both hands or with two people.

3.9 Installing the combiner cabinet

1. Choose the location from the combiner size (Figure 3-13) and the clearances (Section 3.4). The combiner can stand at the left, at the right or between the cabinets.
2. Drill 4 holes of 14 mm at its fixing holes (Figure 3-14); on a U-channel base, as in Figure 3-15.
3. Fit the expansion anchors, as for the cabinet (Figure 3-9): sleeves flush with the floor, bolts 30–50 mm above it.
4. Move the combiner onto the anchors (forklift arms from the side). Fit the spring and flat washers and tighten the nuts. It is fixed to its pallet with the same bolts as the cabinet (Figure 3-5).
5. Refit its bottom plates, as for the cabinet (Figure 3-10).

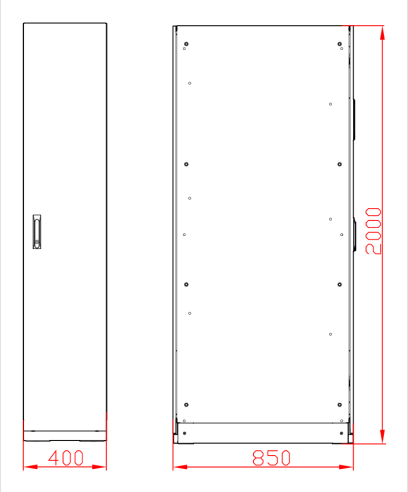

FIGURE 3-13 Combiner size, mm (400 × 850 × 2,000)

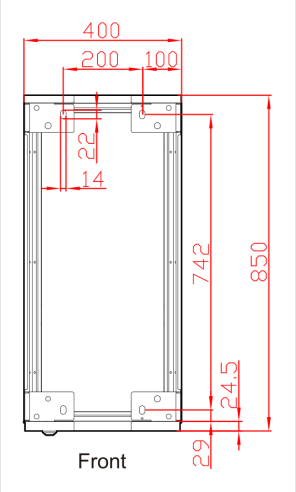

FIGURE 3-14 Combiner fixing holes, mm

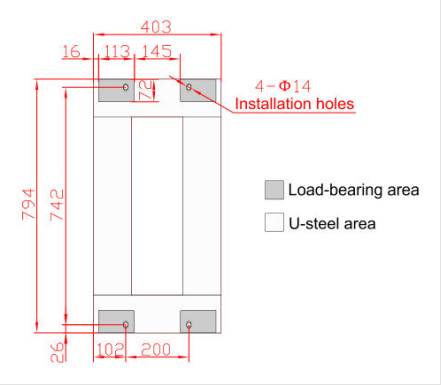

FIGURE 3-15 Combiner on U-channel steel, mm

3.10 Fitting the in-row rear frame

1. Remove the rear plate and the bottom plate of the cabinet (Figure 3-16).
2. Fix the in-row rear frame to the rear of the cabinet with its 4 fixing parts (Figure 3-17).
3. For a data-center floor, fit the bottom fixing part (Figure 3-19) to the bottom of the frame (Figure 3-20).
4. Refit the rear plate and the bottom plate (Figure 3-18).

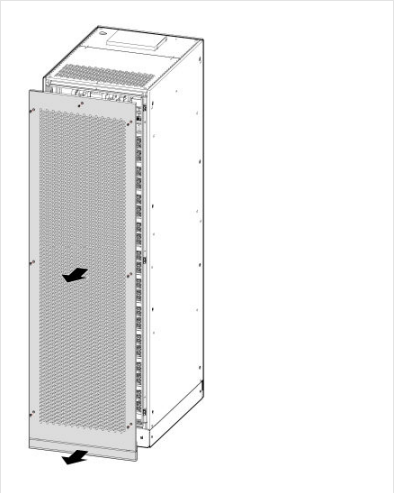

FIGURE 3-16 Removing the rear and bottom plates

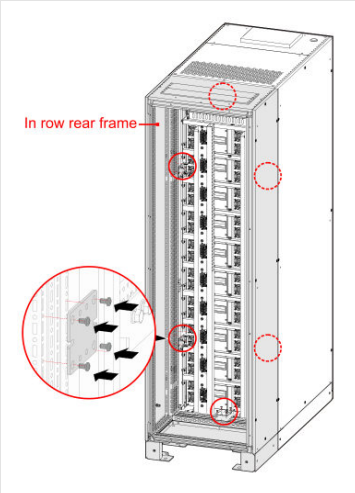

FIGURE 3-17 Fixing the in-row rear frame

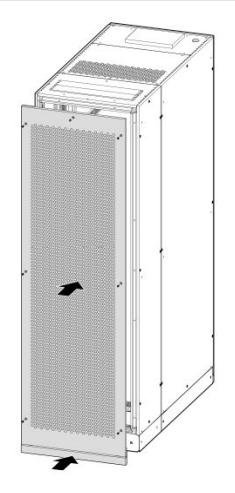

FIGURE 3-18 Refitting the plates

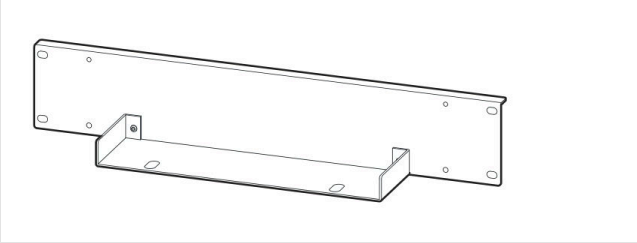

FIGURE 3-19 Bottom fixing part

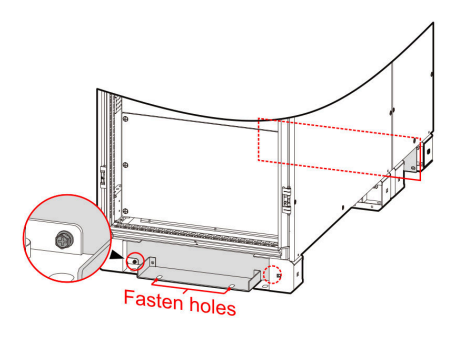

FIGURE 3-20 Where the bottom fixing part goes (fixing holes circled)

3.11 Joining several cabinets

The example shows four cabinets and one combiner.

1. Place and anchor each cabinet as in steps 1 to 4 of Section 3.7, in the planned layout (Figure 3-21). Align the fronts and the rears of all cabinets before you tighten.
2. Open the front doors and remove the rear plates. Bolt the front and rear posts of each pair of adjacent cabinets together: 6 bolts per pair, 3 at the front and 3 at the rear (Figure 3-22). The combiner is joined the same way.
3. Refit the rear plates and the bottom plates. Check that every rear, bottom and side plate is in place (Figure 3-23).

⚠ CAUTION

Fasten the front posts with two people.

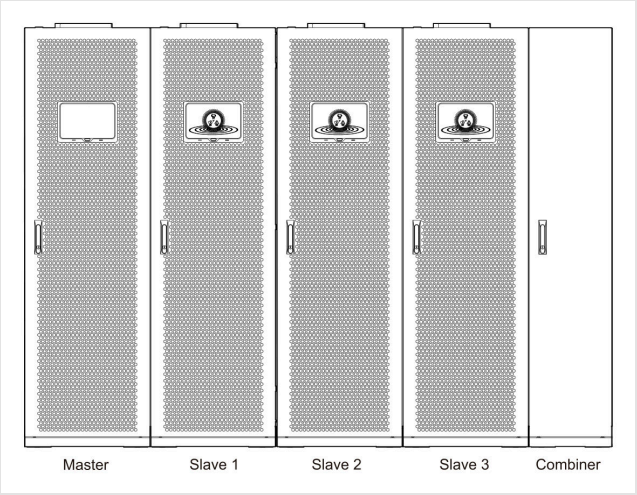

FIGURE 3-21 Layout — master, slaves 1 to 3, combiner

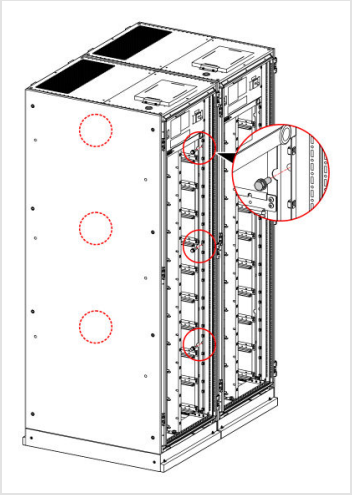

FIGURE 3-22 Joining bolts between two cabinets (circled)



FIGURE 3-23 Joined cabinets, ready for wiring

3.12 Electrical connections

All cables enter the L6 cabinet from the **top**. The combiner takes the cabinet cables from the top, and its cables to the UPS from the top or the bottom.

TABLE 3-4 Cables for the electrical connection

Cable	L6 cabinet	Supplied
DC output (+, –, N, PE)	Every cabinet	By the customer (Section 3.5)
Cabinet communication cable (2#)	Every slave	1 per slave cabinet, by AEC
Cabinet power cable (3#) — auxiliary supply link	Every slave	1 per slave cabinet, by AEC
Network cable (1#)	Every cabinet	4.5 m per cabinet by AEC; longer runs by the customer
RJ45 connectors	Every cabinet	2 per cabinet by AEC; more by the customer

Cable	L6 cabinet	Supplied
Auxiliary supply cable to the master, RS485 cable to the UPS, EPO cable	Master	By the customer

DANGER

Before any wiring, open both battery breakers of every cabinet, and check that every module knob is at OFF.

3.12.1 Power wiring — single cabinet

1. Open the front door and remove the top plate (wiring plate) (Figure 3-24).
2. Lead the +, – and ground (PE) cables through the foam of the top entry, and connect them to the busbars (Figure 3-25, Figure 3-27, Table 3-5): **PE first**, then + and –. Check the polarity with a voltmeter before you connect the UPS end.
3. Connect the N busbar only if the battery input of the IST6 has a neutral (midline) and the L6 is set to ±240 V with midline (Section 2.2). Otherwise leave N unconnected (Figure 3-28).
4. Connect the other end of the cables to the battery terminals of the IST6: + to battery +, – to battery –, N to the battery neutral (only as in step 3), PE to the ground bar (see the IST6 user manual).
5. Make the communication connections (Section 3.12.2), then refit the top plate and close the door.

CAUTION

For a UPS without a battery midline, connect only +, – and ground. Connect N only to a UPS that has a midline input.

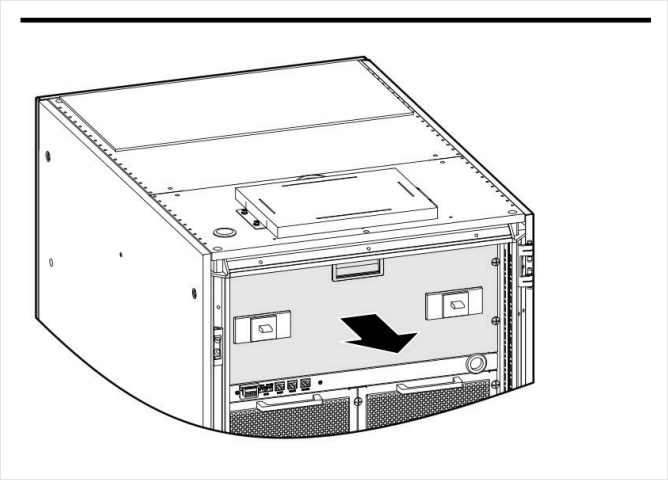

FIGURE 3-24 Removing the top plate (wiring plate), door open

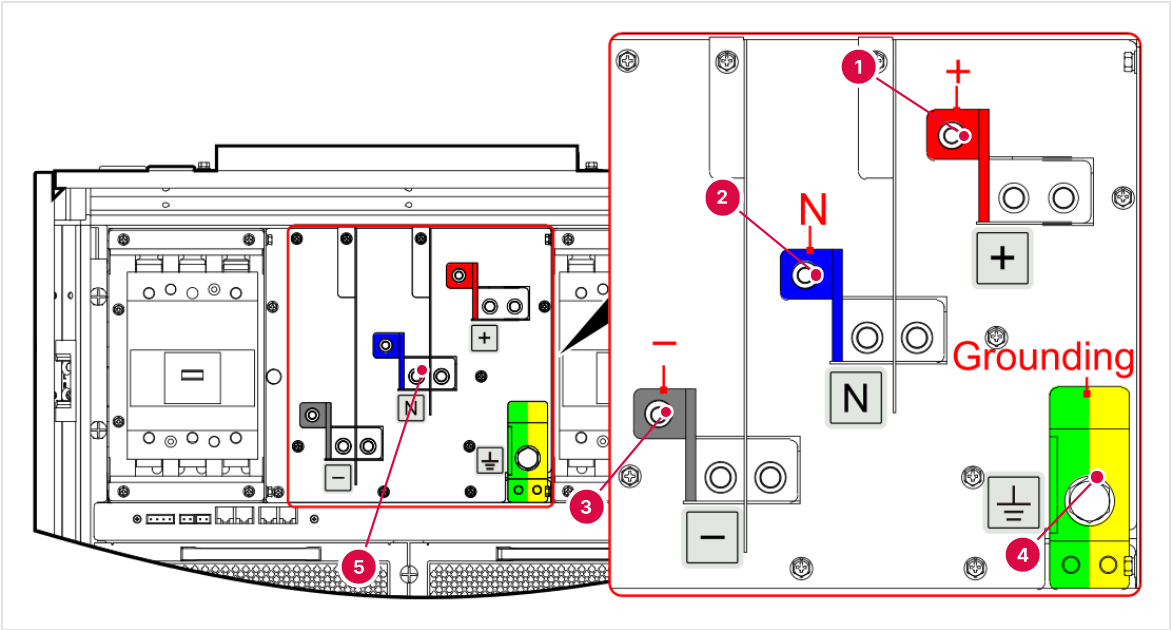

1. Busbar + (positive)
2. Busbar N (midline): only for an IST6 battery input with neutral
3. Busbar – (negative)
4. Ground bar (PE)
5. Terminal area, seen from the front

FIGURE 3-25 DC output terminals at the top of the cabinet — overview (left) and detail (right)

Where the terminals are. The busbars sit at the top of the cabinet, behind the wiring plate that carries the battery breakers, right under the top cable entry (Figure 3-26). Figure 3-27 numbers them; Table 3-5 gives the bolt, torque, conductor and lug for each one.

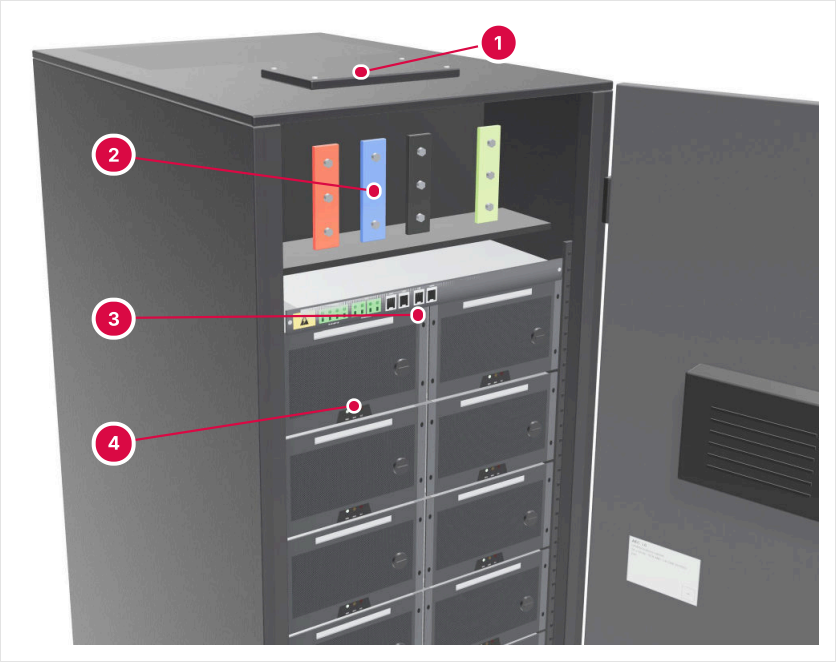

1. Top cable entry with foam
2. DC output busbars and ground bar (Figure 3-27)
3. Control box (Figure 2-17)
4. Battery modules (top rows)

FIGURE 3-26 Illustration: terminal area with the wiring plate (and the battery breakers on it) removed

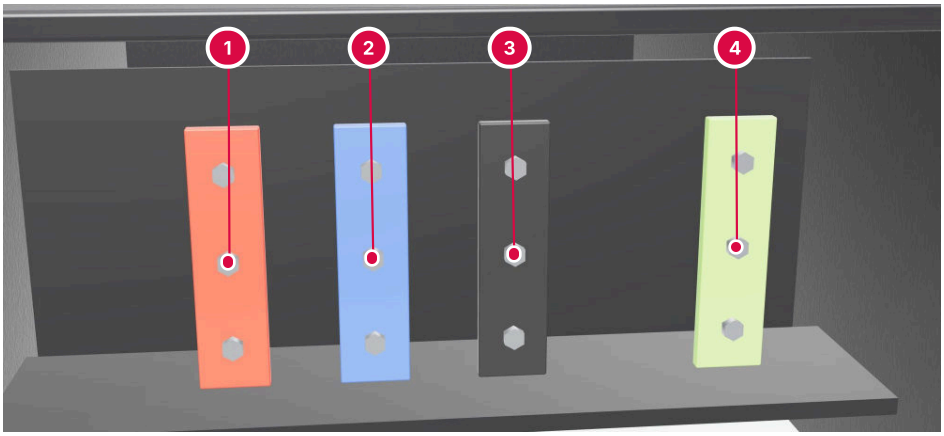

1. Busbar + (positive)
2. Busbar N (midline): only for an IST6 battery input with neutral
3. Busbar – (negative)
4. Ground bar (PE)

FIGURE 3-27 Illustration: DC output busbars seen from the front

TABLE 3-5 DC output terminals of one cabinet

Terminal	Bolt	Torque	Conductor, recommended (cable about 5 m)	Conductor, maximum (busbar capacity)	Lug
1 Busbar +	Ask AEC	Ask AEC	2 × 120 mm² (L6-100: 1 × 50 mm²)	2 cables of 120 mm² (L6-100: 2 of 95 mm²)	DT120 (L6-100: DT50)
2 Busbar N	Ask AEC	Ask AEC	2 × 120 mm² (L6-100: 1 × 50 mm²) — only with a midline	2 cables of 120 mm² (L6-100: 2 of 95 mm²)	DT120 (L6-100: DT50)
3 Busbar –	Ask AEC	Ask AEC	2 × 120 mm² (L6-100: 1 × 50 mm²)	2 cables of 120 mm² (L6-100: 2 of 95 mm²)	DT120 (L6-100: DT50)
4 Ground bar (PE)	Ask AEC	Ask AEC	1 × 50 mm² (L6-100: 1 × 25 mm²)	Ask AEC	DT50 (L6-100: DT25)

- Values from Table 3-1. Size and check every DC conductor as Section 3.5 explains; if the sizing for your installation exceeds the busbar capacity, ask AEC.
- The busbar bolt size and tightening torque are not documented: ask AEC before you order lugs, and tighten to the value AEC gives.
- The rating of the battery breakers is not documented: ask AEC.

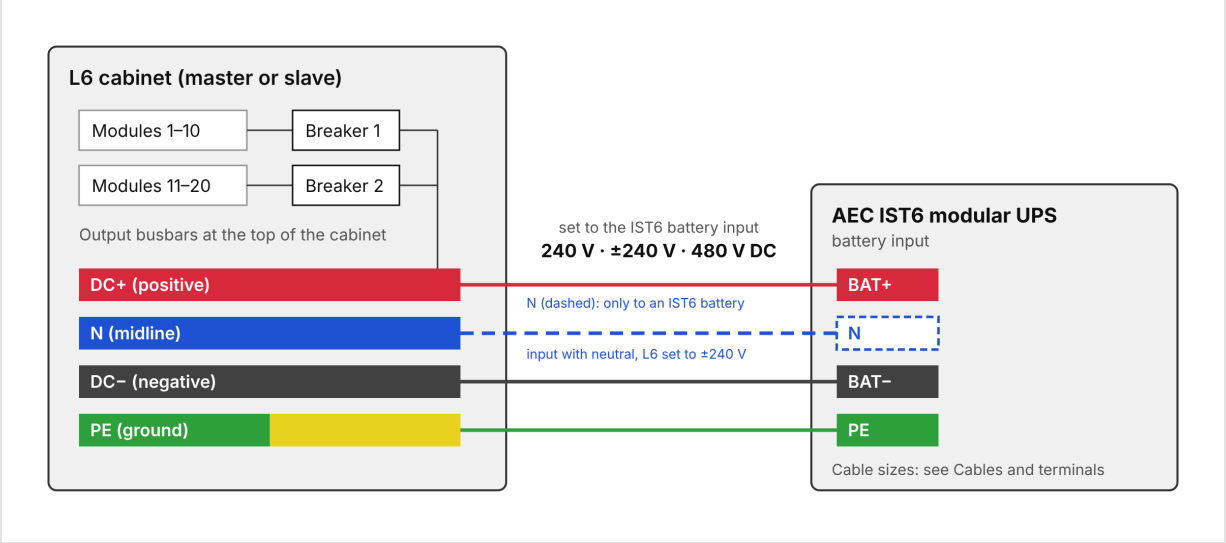

FIGURE 3-28 Power wiring — one L6 cabinet to the AEC IST6 (40 / 50 Ah cabinet shown)

3.12.2 Auxiliary supply, EPO and communication — single cabinet

Connect the cables to the control box (Section 2.11). Route them as in Figure 3-30.

1. **Auxiliary supply** to AC IN (L, N): a single-phase supply within 160–300 V AC, for example 220–230 V AC, from a circuit with its own overcurrent protection. It powers the touchscreen and the BMS.
2. **EPO** to the left EPO terminal (NO, COM): the external EPO switch (Section 3.12.6).
3. **RS485** to the BMS port of the BMS expansion card of the IST6, with an RJ45 cable: pins 1 (RS485+) and 2 (RS485–), Table 2-15. Then set the battery of the IST6 to lithium with BMS, as the IST6 user manual describes.
4. **LAN** (optional) to the monitoring computer.

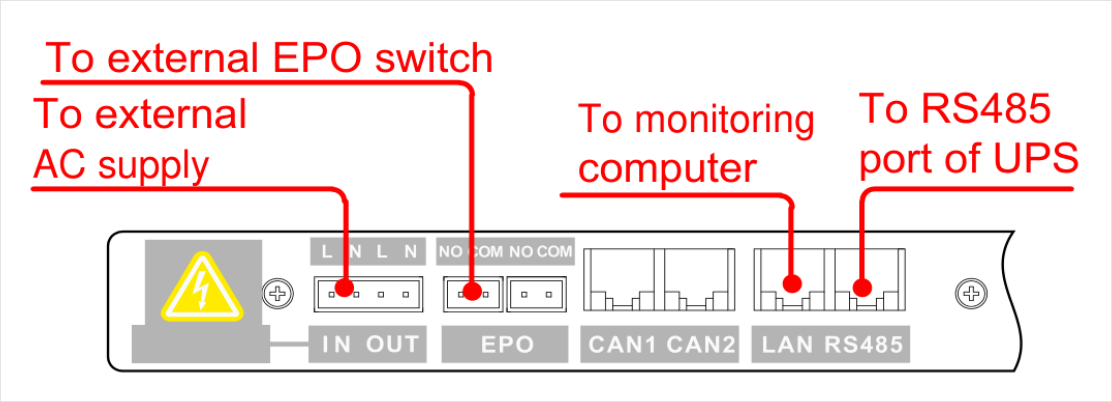

FIGURE 3-29 Control box connections of a single cabinet

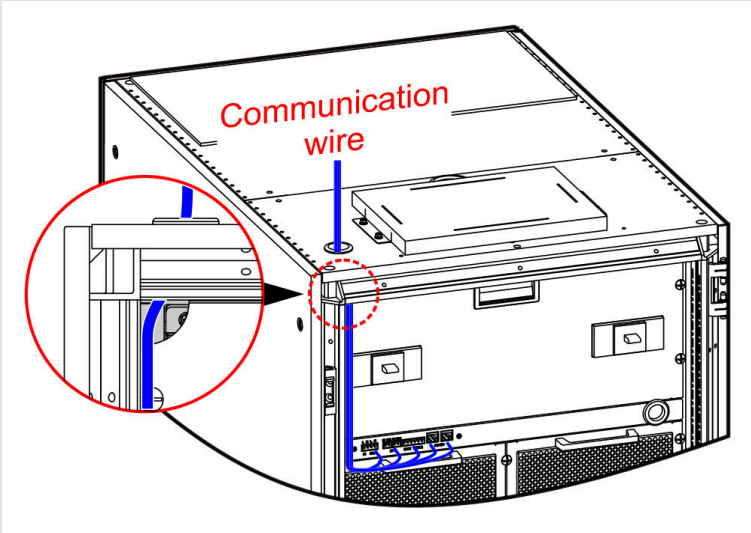

FIGURE 3-30 Route of the communication cables to the control box

3.12.3 Power wiring — several cabinets

With several cabinets, the L6-COMBINER collects their outputs. The example shows one combiner.

1. Connect the +, –, (N) and PE cables of every cabinet as in Section 3.12.1, steps 1 to 3.
2. Lead the other end of each cabinet's cables through the top of the combiner, and connect them to the busbars (Figure 3-32, Figure 3-33): + to busbar +, – to busbar –, N to busbar N (only with a midline, Section 2.2), PE to the ground bar.
3. Each busbar has 6 holes: the **4 outer holes** take the cabinet cables, the **2 middle holes** take the UPS cables.
4. Connect the combiner to the battery terminals of the IST6 from the middle holes, through the top or the bottom of the combiner (Figure 3-31).

i NOTE

- The combiner can stand at the left, at the right or between the cabinets: the wiring is the same.
- The front busbars take 4 cabinets. For up to 8 cabinets, remove the front and rear plates: the rear busbars are the same as the front ones.

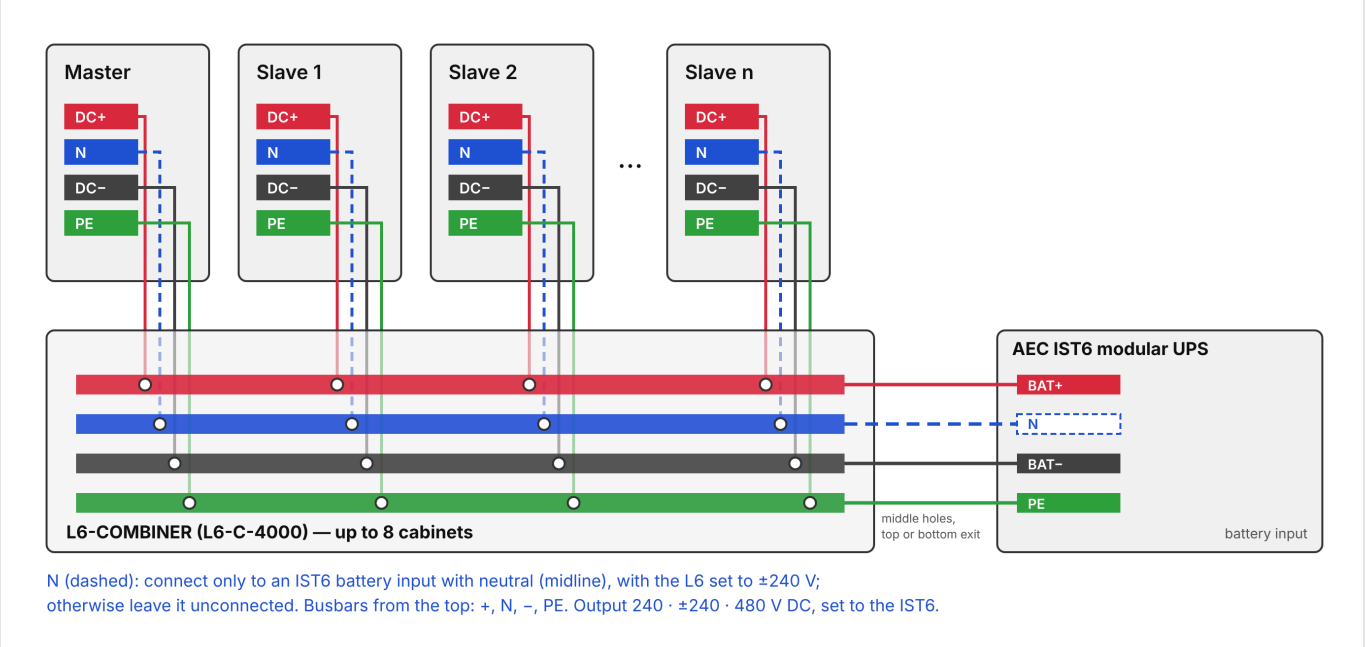

FIGURE 3-31 Power wiring — several L6 cabinets through the L6-COMBINER to the AEC IST6

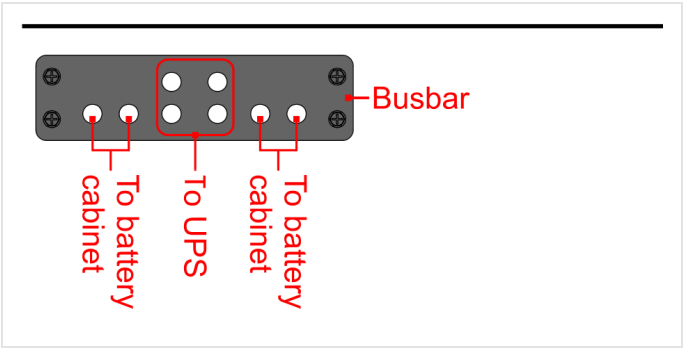

FIGURE 3-32 Holes of one busbar

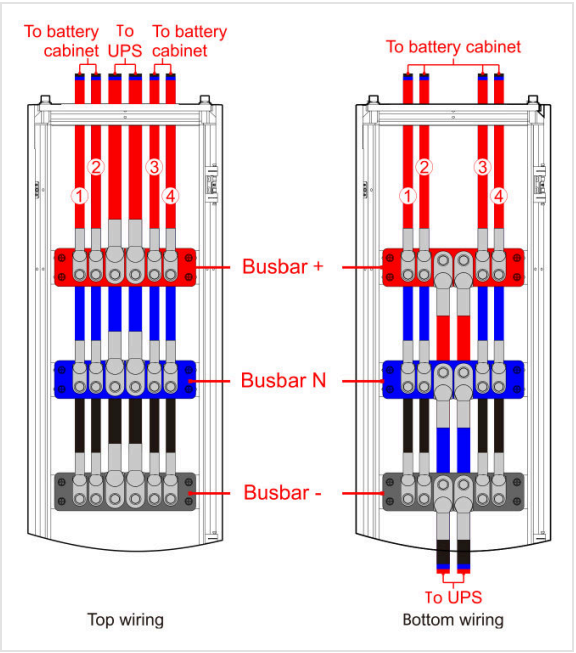

FIGURE 3-33 Combiner wiring — top exit (left) and bottom exit (right) to the UPS

3.12.4 Installing the networking device

With two or more cabinets, install a networking device on the master. With more than 7 cabinets, install a second one on a slave (for example slave 6), where the site allows.

1. Remove the top plate of the networking device (Figure 3-34).
2. Pull out the two network cables in the cabinet and remove the clamp of the networking device (Figure 3-35).
3. Fit the networking device to the clamp (Figure 3-36).

4. Refit the assembled networking device (Figure 3-37).
5. Pull out the green terminal block at the right of the networking device, cut the cable tie of the reserved power cable, and connect the power cable to the networking device (Figure 3-38).
6. Plug the two network cables of step 2 into any ports of the networking device. Lead the network cables of the slaves through the top cable holes and plug them into free ports (Figure 3-39, Figure 3-40).

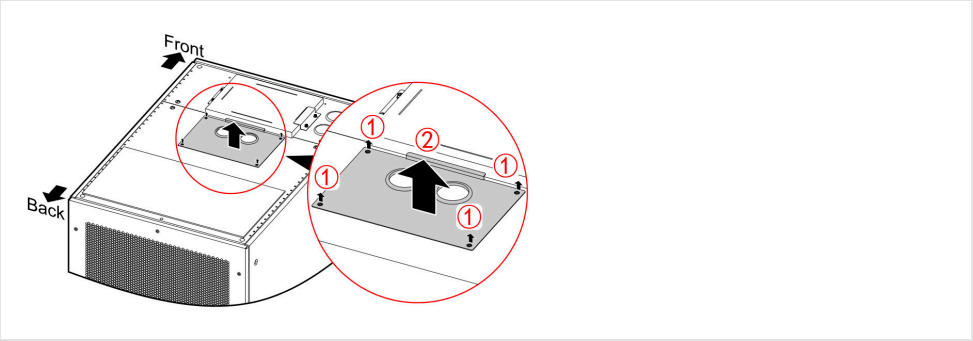

FIGURE 3-34 Step 1 — top plate of the networking device

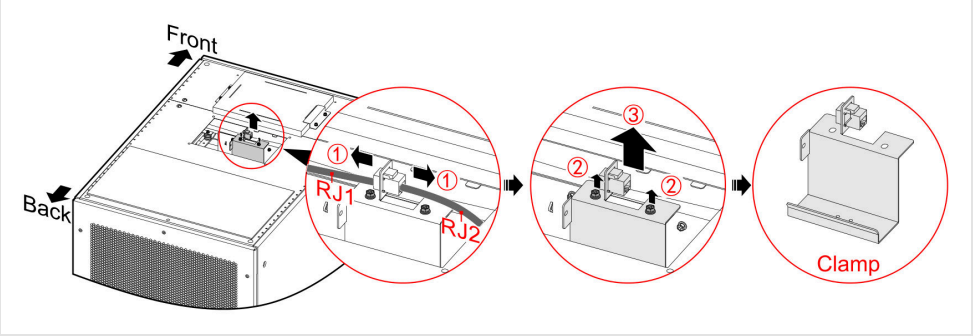

FIGURE 3-35 Step 2 — network cables (RJ1, RJ2) and clamp

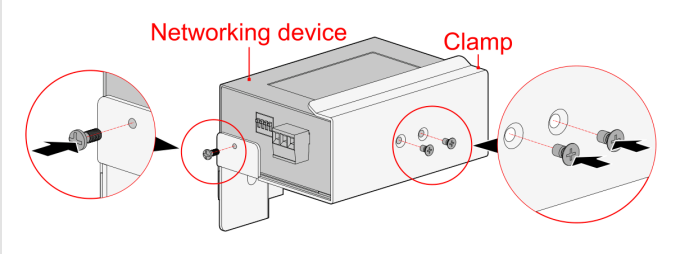

FIGURE 3-36 Step 3 — device on the clamp

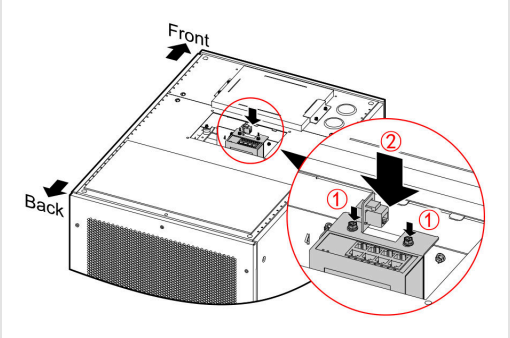

FIGURE 3-37 Step 4 — refit the device

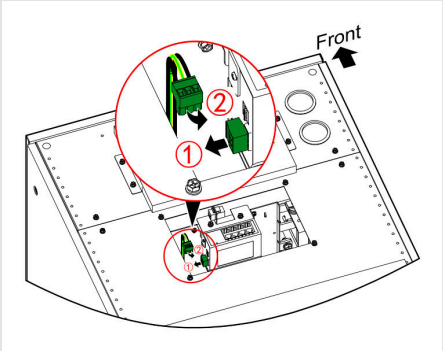

FIGURE 3-38 Step 5 — power cable

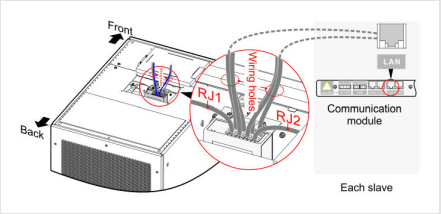

FIGURE 3-39 Step 6 — network cables into the device

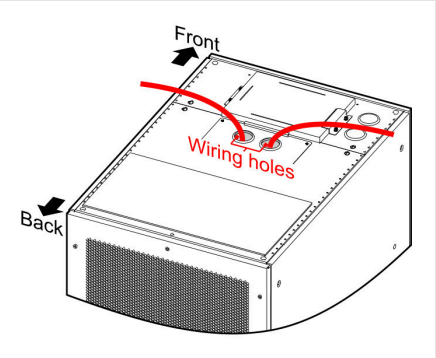

FIGURE 3-40 Cable holes for the slaves

3.12.5 Auxiliary supply, EPO and communication — several cabinets

1. **Auxiliary supply:** the external supply to AC IN of the master. AC OUT of the master to AC IN of slave 1, AC OUT of slave 1 to AC IN of slave 2, and so on, with the cabinet power cables (3#).
2. **EPO:** the external switch to the left EPO terminal of the master; the right EPO terminal of each cabinet to the left EPO terminal of the next one (Section 3.12.6).
3. **Network:** the LAN port of every slave to the networking device of the master (up to 7 cabinets). From 8 to 13 cabinets, slaves 7 to 11 and 12 go to the networking device of slave 6, linked to the master's device (Figure 3-42).
4. **RS485:** from the master only, to the BMS expansion card of the IST6.
5. **LAN of the master** (optional) to the monitoring computer.
6. Refit the plates and close the doors.

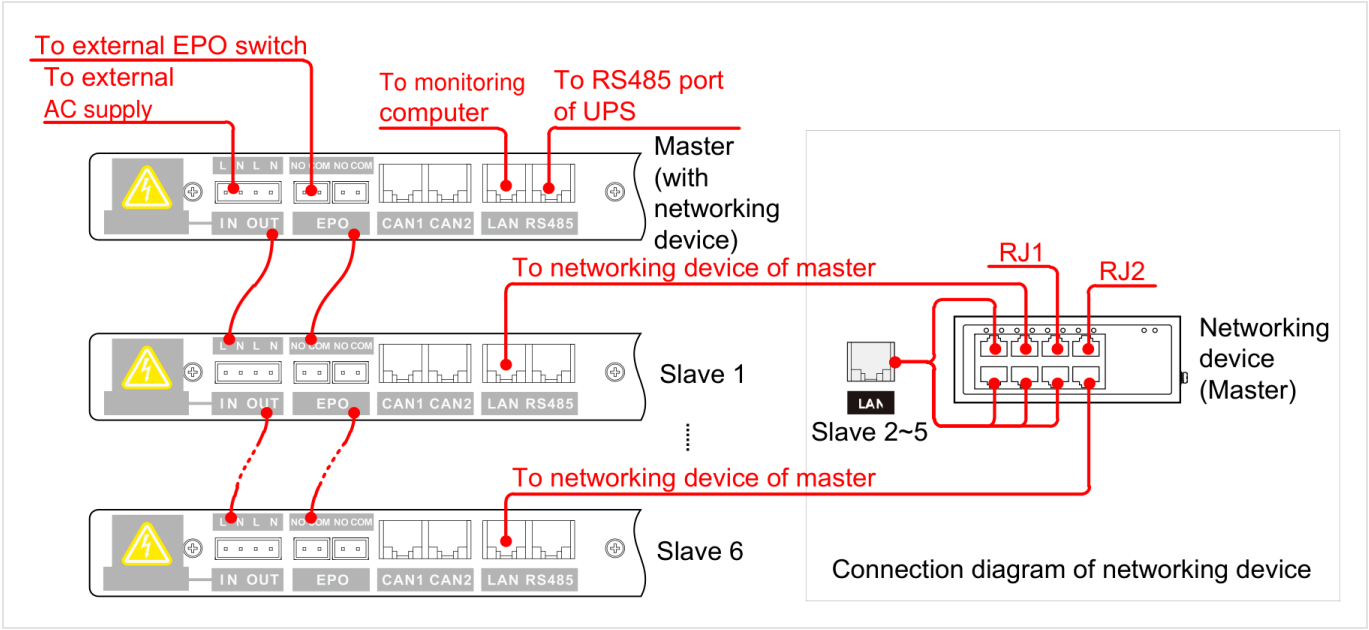

FIGURE 3-41 Connections for 2 to 7 cabinets

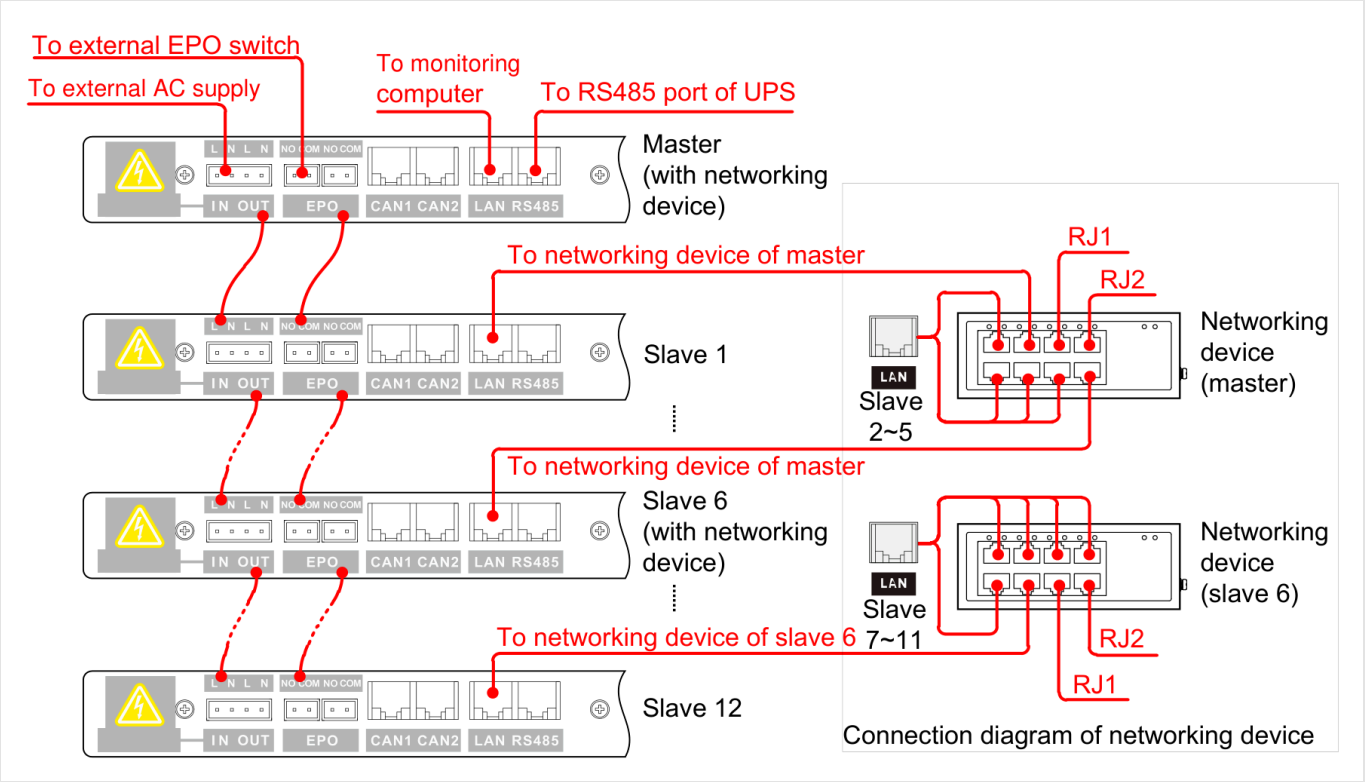

FIGURE 3-42 Connections for 8 to 13 cabinets

i NOTE On the touchscreen, give each cabinet its own SBMU address and enter the module quantity of each cabinet before the first start (L6 Touchscreen manual, AEC-UM-L6T-EMEA, first start-up of several cabinets).

3.12.6 EPO wiring

The EPO needs an external **latching (self-locking) switch with a normally open contact**, rated 12 V DC and more than 2 A, supplied by the user. Pressing the switch closes the contact: the L6 system stops supplying the UPS (Section 4.5).

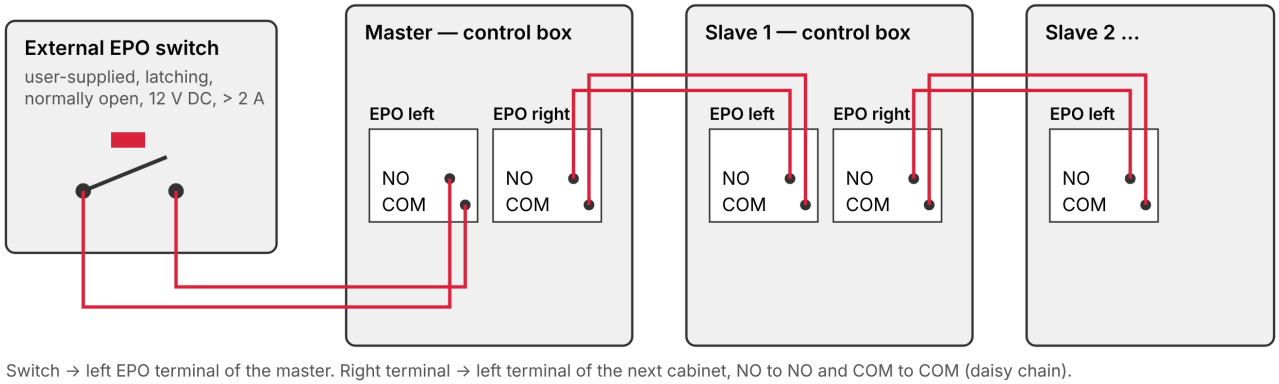

FIGURE 3-43 EPO wiring — one switch for all cabinets

1. Connect the two wires of the switch to the left EPO terminal of the master: NO and COM.

2. Several cabinets: connect the right EPO terminal of the master to the left EPO terminal of slave 1 (NO to NO, COM to COM). Continue the same way to the last slave.
3. Test the EPO during commissioning (Section 4.5).

3.13 Installation checklist

TABLE 3-6 Installation checklist

No.	Check	Result
1	The cable colors of the L6 system and of the UPS follow the specification.	Yes ☐ No ☐
2	The cables are firmly fixed to the L6 system.	Yes ☐ No ☐
3	Every connection is tight.	Yes ☐ No ☐
4	The polarity between the L6 system and the UPS is correct (+ to +, – to –).	Yes ☐ No ☐
5	Every cable is labeled correctly.	Yes ☐ No ☐
6	The wiring is neat and complies with the specification, IEC 60364 and the local regulations.	Yes ☐ No ☐
7	The installation leaves room for future changes, expansion and maintenance.	Yes ☐ No ☐
8	No objects are left inside the cabinet (behind the modules, on top of the cabinet, at the terminals and breakers).	Yes ☐ No ☐

04 CHAPTER 4 Operation

Before you start, the operation sequence, the first power-on test, daily power on and power down, emergency power off and recovery.

4.1 Before you start

- Each cabinet has battery breakers. **Close them before you start the UPS**: otherwise the UPS has no battery and no output on a mains failure. **Open them before you service the UPS**, to avoid a short circuit between positive and negative.
- Check the UPS load before you start the L6 system. The UPS load must not exceed **90 % of the rated output power of the L6 system**, or the L6 system goes to overload protection.
- The UPS charge voltage must match the charge input of the L6 system (Table 7-1); otherwise the L6 system does not charge.
- The L6 system has three output systems: 240 V DC, ±240 V DC and 480 V DC. Check that the output matches the battery input of the IST6 (Table 2-1).

4.2 Operation sequence

Do the power-on test (Section 4.3) before the first start, and again after the system has stood unused for a long time. Start the system for daily use only after the test has passed.

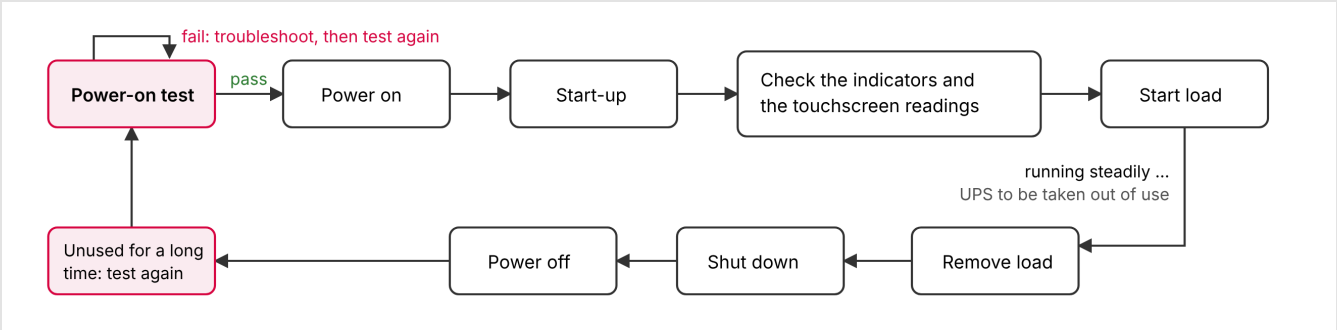

FIGURE 4-1 Operation sequence

4.3 First power-on test

Before the first start, test the system as below. Start it only when the test has passed.

> i NOTE **Several cabinets:** set the SBMU address of each cabinet on the touchscreen. If the module quantity of a cabinet differs from the default, the touchscreen raises an alarm: set the module quantity (L6 Touchscreen manual, AEC-UM-L6T-EMEA: SBMU setting › Basic setting).

4.3.1 Power-on test of the L6 system

1. **Connect the auxiliary supply** of the L6 system (AC IN of the master, Figure 2-16).
   You see: after about 30 seconds the touchscreen of the master has started (Figure 2-5); the yellow indicator of each slave cabinet lights (Figure 2-7).
2. **Check that all battery breakers are open** (OFF) in every cabinet (Figure 2-8, items 1 and 2).

3. **Start the modules:** turn the knob of every module to ON (locked symbol, Figure 2-14).
   You see: the three indicators of each module flash together (self-test). After about 10 seconds the green indicator flashes once a second: the module is in discharge mode (Table 2-13). The touchscreen lights.
4. **Check on the touchscreen** that the system output voltage is **490 ± 5 V DC**, and that the blue indicator of each slave cabinet is on.

4.3.2 Power-on test with the UPS

1. **Wait until the voltage shown on the touchscreen is below 20 V DC.** Then close all battery breakers of the L6 cabinets, and start the IST6 from the battery (battery cold start, see the IST6 user manual).
   You see: the UPS starts from the battery and gives a normal AC output.
2. **When the UPS output is steady, connect the load** — no larger than the rated output of the L6 system. On the touchscreen, check the readings of every module: the load is shared equally, or by state of charge when SOC balance is enabled.
3. **Close the AC input breaker of the UPS.**
   You see: the UPS moves from battery to mains (inverter on mains power). The L6 system moves from discharge to charge: every module is in charge mode and its green indicator stays on.

4.4 Daily power on and power down

4.4.1 Power on

1. Close all battery breakers of the L6 cabinets (Figure 2-8, items 1 and 2).
2. Turn the knob of every module to ON (locked symbol).
   You see: the green indicators of all modules light. The system is on.

4.4.2 Power down

1. Before you shut the L6 system down, **switch the UPS off**. Then open all battery breakers of the L6 cabinets.
2. Turn the knob of every module to OFF (unlocked symbol).
   You see: all module indicators go off. The system is off.

4.5 Emergency power off (EPO)

The EPO needs the external latching switch described in Section 3.12.6. Use it only in an emergency.

Press the external EPO switch. The L6 system goes to emergency power off: the touchscreen shows **EPO protection**, and every battery module in every cabinet switches off.

> ⚠ ***WARNING***
>
> After an EPO the L6 system has no output. If the UPS runs on battery, the load can lose power.

4.6 Recovery after an EPO

1. Release the external EPO switch (contact open, no EPO).
2. Restart the L6 system with one of the methods of Table 4-1.
3. You see: the L6 system starts, and the EPO state is released.

TABLE 4-1 Restart methods after an EPO

Condition	Method
Voltage at the output terminals normal (UPS charge voltage present) — method 1	Open the battery breakers, wait 5 seconds, close them again.
Voltage at the output terminals normal — method 2	Turn the knob of every module to OFF, wait 5 seconds, turn them all back to ON.
No voltage at the output terminals	Turn the knob of any one module to OFF, wait 5 seconds, turn it back to ON.

CHAPTER 5

05 Maintenance and troubleshooting

Safety precautions, the preventive maintenance schedule, care of the modules, replacing a module, troubleshooting and what to do in a fault.

Proper maintenance keeps the L6 system in its best condition and gives the longest life.

5.1 Safety precautions

- Hazardous voltage is present inside the L6 system even when it is not operating. Before maintenance, check with a multimeter that the system is completely shut down and safe.
- Before you close a battery breaker, measure the voltage and the polarity at the terminals with a multimeter. If the voltage is abnormal or the polarity is reversed, **do not close the breaker**.
- Do not wear rings, watches or other metal objects.
- Follow the safety regulations strictly. If in doubt, ask AEC service.

5.2 Preventive maintenance

- Keep the room clean: no dust or chemical pollution.
- Every 6 months, check the input and output cable terminals for good contact.
- Check the fans regularly; keep the vents clear. Have a damaged fan repaired or replaced.
- Check the SOC and the state of health (SOH) of the modules regularly.
- Check the status of the L6 system regularly, so that any fault is found early.

TABLE 5-1 L6 maintenance schedule

Interval	Task
Weekly	On the touchscreen: no alarm; state of charge and cell temperatures normal; all modules on line.
Monthly	Vents and fans clear; room temperature within the operating range; no smell, noise or heat at the cabinets.
Every 6 months	Read the alarm and event history; check the balance of the cell voltages shown by the BMS; check the cable terminals.
Yearly	AEC service: power connections (tightness, signs of heating), parts and connections, module and BMS firmware, smoke detector test.

⚠ *CAUTION*

The modules carry high DC voltage and energy even when the UPS is off. Opening modules or the DC busbars is reserved to AEC service.

5.3 Care of the modules

Charging. At the first start, start the UPS and charge the battery. The L6 system can be used while it charges, but if the mains fails during this first charge, the runtime can be shorter than rated.

A system or a module that is not used must be charged regularly:

TABLE 5-2 Charging an unused module

State of charge (SOC)	Charge
SOC ≤ 10 %	At once
10 % < SOC < 40 %	Every month
40 % ≤ SOC < 80 %	Every 3 months
80 % ≤ SOC < 100 %	Every 6 months

- Clean the module front with a dry cloth. Never use oil or solvents such as gasoline or thinner.
- Keep modules away from fire and from equipment that makes sparks.
- If the L6 system is taken out of use, open the battery breakers and turn every knob to OFF, so that the modules do not discharge for a long time and get damaged.

5.4 Replacing a module

⚠ WARNING

- Do not put a module into fire, and do not open it or its cells: risk of explosion, electric shock and burns.
- The output of a module can carry hazardous voltage: check before you touch it.
- Recycle used modules according to the regulations.

The modules are hot-swappable: the system keeps working while one module is replaced.

1. Turn the knob of the module to OFF (Figure 2-14).
2. Remove the fixing screws (Figure 3-12).
3. Pull the module out by its handle, watching the 1/2 and 1/4 marks (Section 2.10).
4. Fit the new module, of the same type and capacity, as in Section 3.8, and turn its knob to ON.
5. If the number of modules has changed, set the module quantity on the touchscreen.
6. Keep the knob of the removed module at OFF. To ship it, use its original packaging, or ask AEC service.

5.5 Troubleshooting

If the L6 system does not work normally after it starts, look for the cause in Table 5-3. Check also whether the environment is the cause: temperature or humidity outside the limits, or an overload. The table covers only simple diagnosis. If it does not identify or solve the problem, contact AEC service.

TABLE 5-3 Troubleshooting

No.	What you see	Possible cause and action
1	The touchscreen or the indicator panel does not light.	The auxiliary AC supply is not connected, and the modules are not started.
2	The module quantity on the touchscreen differs from the modules fitted.	The module quantity is not set to the modules really fitted: set it on the touchscreen.
3	Mains normal and module SOC below 80 %, but the modules do not charge.	The UPS charge voltage is outside the allowed range. The battery cables are loose or the polarity is reversed. The battery breaker is open.

No.	What you see	Possible cause and action
4	The L6 system goes to protection as soon as it switches to discharge.	The load exceeds the rated output of the L6 system: reduce the load or add modules. The system has not been charged for a long time: the SOC is low or the battery is damaged, and it goes to low-SOC protection.
5	The L6 system works normally after start, then shuts down by itself some time later.	Normal: on battery, the system reached the end of discharge (low-voltage protection) and shut down. When the mains returns, it starts and charges by itself.
6	The red indicator of a module is on.	Low-SOC protection of the module. Temperature outside the range, or the fan does not run. Module fault: replace the module (Section 5.4).

5.6 What to do in a fault

System fault. Read the fault on the touchscreen. Low-SOC protection and overload protection are normal. For any other fault, switch the modules off from the touchscreen and, if needed, open the battery breakers to prevent further damage. Call AEC service.

Module fault. A faulty module disconnects itself from the system. The system normally keeps working, with less redundancy. Switch the faulty module off, pull it out of the cabinet (Section 5.4) and call AEC service.

CHAPTER 6

06 Transport and storage

How the system is packed, and how to move and store it safely.

6.1 Packaging

The packages carry handling marks on their sides: keep dry, handle with care, this way up and stacking limit, with the model label. The front of each package carries the AEC logo and the product name. Keep each package in the marked direction.

6.2 Transport

- Follow the handling marks and avoid strong shocks. Keep each package in the marked direction.
- Do not ship flammable, explosive or corrosive goods with the L6 system.
- Do not leave the packages in the open during transport: protect them from rain, snow, liquids and mechanical damage.
- Ship the modules at 20–50 % state of charge.

6.3 Storage

- Store the packages in the marked direction, at least 200 mm off the floor and at least 500 mm from walls, heat and cold sources, windows and air inlets.
- Storage temperature −10 to +45 °C; best 0–35 °C. If the system was moved or stored outside this range, let it stand at normal temperature for more than 4 hours before you install and start it.
- No flammable, explosive or corrosive materials or harmful gases in the store; no strong vibration, shock or magnetic fields.
- These conditions allow 6 months of storage. After more than 6 months, have the system checked again. During long storage, charge the L6 system every 3 months (Table 5-2 gives the interval by state of charge).

07

CHAPTER 7

Specifications

The technical data of the L6 lithium battery system: data common to every version, then the data of each module type.

TABLE 7-1 Technical specifications — common to the 40, 50 and 100 Ah versions

Item	Value
Electrical	
Chemistry	Lithium iron phosphate (LiFePO4), cells 3.2 V
Charge current, per module	40 A maximum, 20 A default (set on the touchscreen as Max. cell chg. cur.)
Rated output voltage (discharge)	240 / ±240 / 480 V DC, three output systems, set to the battery input of the IST6 (Table 2-1)
Overload (discharge)	125–135 %: protection after 1 min · 135–150 %: after 30 s · above 150 %: after 500 ms
Rated input voltage (charge)	265 / ±265 / 530 V DC
DC input voltage limit	300 V DC (parallel mode) · 300 V DC + to N and N to – (series with midline) · 600 V DC (series without midline)
Current balance between modules and cabinets	Unbalance ≤ 3 %
Cabinets in parallel	15 maximum; up to 8 per L6-COMBINER (L6-C-4000), up to 4 per L6-C-2000
Auxiliary supply	160–300 V AC, single-phase, to AC IN of the master; linked to the slaves through AC OUT
Cell cycle life	5,000 cycles at 50 % depth of discharge
Functions	
Discharge SOC balance · battery cold start · automatic restart after power returns · EPO	Yes
Fire protection	At module level
SOC accuracy · SOH accuracy	≥ 95 % · ≥ 90 %
Charge to discharge transfer	Meets the dynamic output requirements of the UPS
Cell insulation monitoring	Yes
Switching overshoot	≤ 3 % of the rated voltage
Protections	Over-temperature, overcurrent, short circuit, battery overvoltage and undervoltage, low SOC
Communication	RS485 (to the UPS), TCP/IP (LAN); CAN reserved
Operator interface	10-inch touchscreen (MBMU) on the master · indicator panel on the slaves
EPO switch	External, latching, normally open, 12 V DC, > 2 A, user-supplied
Environment	

Item	Value
Operating temperature	0–40 °C; best 20–30 °C
Storage temperature	−10 to +45 °C; best 0–35 °C
Relative humidity	5–95 %, non-condensing
Altitude	Up to 4,000 m; derate above 2,000 m per IEC 62040-3
Noise	Cabinet < 65 dB · module 58 dB
Overvoltage category, battery side	II
Protection degree	IP20
Seismic rating	Level 9
Mechanical	
Cabinet size W × D × H	600 × 850 × 2,000 mm
Cable entry	Top
Cooling	Front to rear, or front to top with the top cover plate removed; fan speed controlled
Warranty	5 years (AEC lithium ranges)

TABLE 7-2 Data by module type

Item	40 Ah	50 Ah	100 Ah
Module ordering code	On request	L6-MOD-50LI	On request
Cell discharge rate	6C	4C	1C
Module voltage · energy	57.6 V · 2.3 kWh	57.6 V · 2.88 kWh; 2.5 kWh to the load (AEC rating)	57.6 V · 5.76 kWh
DC/DC output per module	10 kW	10 kW	5 kW
Module size W × D × H	223 × 665 × 152 mm	223 × 665 × 152 mm	440 × 665 × 132 mm
Module weight	36 ± 1 kg	37 ± 1 kg	52 ± 1 kg
Modules per cabinet, maximum	20	20	12
Nominal capacity, full cabinet	46 kWh	58 kWh (29 kWh with 10 modules)	69 kWh
Rated output power, full cabinet	200 kW	200 kW (100 kW with 10 modules)	60 kW
Cabinet weight	965 ± 20 kg full (M1: 955 ± 20 kg)	Empty 244.9 kg · 10 modules 615 kg · full 985 ± 20 kg (M1: 975 ± 20 kg)	810 ± 24 kg full
Typical backup (Section 2.3.1)	10 / 20 min	15 / 30 min	1 / 2 / 4 h

Specifications are subject to change without notice.

APPENDIX A

A Acronyms and abbreviations

The abbreviations used in this manual.

TABLE A-1 Acronyms

Term	Meaning
BMS	Battery management system
CAN	Controller area network
DC	Direct current
EPO	Emergency power off
IEC	International Electrotechnical Commission
IST6	AEC modular UPS, three-phase 400 V
LAN	Local area network
LED	Light-emitting diode
LiFePO4	Lithium iron phosphate
MBMU	Main battery management unit: the system controller with the touchscreen, in the master cabinet
PBMU	Pack battery management unit: the BMS inside each module
PE	Protective earth (equipment ground)
RS485	Serial communication standard TIA-485
SBMU	Subsystem battery management unit: the BMS of each cabinet
SOC	State of charge
SOH	State of health
UPS	Uninterruptible power supply

Service and support

AEC technical support is available 24 hours a day, 7 days a week. For help with installation, start-up, alarms, settings, spare parts, warranty claims and service visits, contact us by WhatsApp, phone or e-mail.

TECHNICAL SUPPORT · 24/7	**+39 393 080 5211**	WhatsApp and phone — always available
SERVICE E-MAIL	**service@aecups.com**	Technical questions, service requests, warranty claims
SALES	**sales@aecups.com**	
OFFICE	**+39 02 9415 8991**	
ADDRESS	**AEC International Srl**	Via Nerviano 55, 20045 Lainate (MI), Italy
WEB	**aecups.com**	

When you contact us, have ready: the cabinet version and serial number (on the rating label), the UPS model, the number of cabinets and modules, and the alarm shown on the touchscreen — a photo of the touchscreen and of the label speeds things up on WhatsApp.