ONLINE UPS · LITHIUM · RACK / TOWER

LUMINA

1–3 kVA

Online double-conversion UPS, single-phase 120 V,
with built-in lithium iron phosphate (LiFePO4) battery.



User Manual

Installation · Operation · Maintenance

LUMINA 1K | LUMINA 1.5K | LUMINA 2K | LUMINA 2.2K | LUMINA 3K

COPYRIGHT AND NOTICES

Copyright © 2026 AEC UPS USA LLC. All rights reserved. No part of this document may be reproduced or transmitted in any form or by any means without the prior written consent of AEC UPS USA LLC.

Trademarks. AEC and LUMINA are trademarks of AEC UPS USA LLC. All other trademarks and trade names mentioned in this document are the property of their respective owners.

Notice. The products, services and features you purchase are defined by the contract between AEC and the customer; some of those described in this document may not be included in your purchase or use. Unless the contract says otherwise, all statements, information and recommendations in this document are provided “as is”, without warranties, guarantees or representations of any kind, express or implied. The information in this document may change without notice. Every effort has been made to ensure its accuracy, but nothing in it constitutes a warranty of any kind, express or implied. The illustrations are for reference: the actual product may differ slightly.

AEC UPS USA LLC
4872 SW 72nd Ave, Miami, FL 33155
Technical support, 24/7 · phone and WhatsApp: **+1 786 553 2100**
service.us@aecups.com · sales@aecups.com · aecups.com

AEC-UM-LUM-US · Rev. B · November 2026. Rev. B restores the input current and breaker data, sizes the branch circuit to the NEC, rewrites the battery text for the LiFePO4 battery, corrects the overload ratings and adds labeled pictures of every panel, port and procedure.

BEFORE YOU START

About this manual

Thank you for choosing an AEC LUMINA UPS. This manual describes the LUMINA 1–3 kVA online UPS — features, controls and connections, operating principle, installation, operation, maintenance, transport and storage. Read it before you start, and keep it with the UPS for future reference.

MODELS COVERED

LUMINA 1K (1,000 VA), 1.5K (1,500 VA, for a 15 A receptacle), 2K (2,000 VA), 2.2K (2,200 VA, extended runtime) and 3K (3,000 VA), with or without the SNMP card fitted at the factory. Ordering codes: Table 2-1.

WHO THIS MANUAL IS FOR

Installers, electricians, IT and facility staff who install, operate and maintain the UPS. The branch circuit and any wiring must be installed by qualified personnel to the National Electrical Code (NFPA 70) and local codes.

Safety messages

Safety messages in this manual follow ANSI Z535.6. The signal word tells how serious the hazard is:

DANGER	A hazardous situation which, if not avoided, **will** result in death or serious injury.
WARNING	A hazardous situation which, if not avoided, **could** result in death or serious injury.
CAUTION	A hazardous situation which, if not avoided, could result in minor or moderate injury.
NOTICE	Information about practices that could damage the equipment, lose data, reduce performance or give unexpected results — not related to injury.

Other conventions

i NOTE Additional information that stresses or completes the text.

✓ TIP A hint that helps you solve a problem or save time.

Keys are shown like [ON]; menus like **Settings › Battery**. Numbers in red circles on a picture are explained in the list under it. Cross-references in red are links in the PDF.

QUICK START

Up and running in six steps

The short version — each step points to the full instructions. Read the safety chapter first.

1. **Check the site.** Flat, dry, ventilated, 32–104 °F (0–40 °C), 12–20 in (300–500 mm) of free space around the UPS and 20 in (500 mm) above it. Section 5.2, page 26.
2. **Check the branch circuit.** A grounded receptacle on its own branch circuit, sized from the maximum input current as in Table 5-1. Section 5.3, page 27.
3. **Mount the UPS** in a 19-inch rack with its brackets, or stand it as a tower on its stands and set the display to TWR. Section 5.6, page 28.
4. **Plug in the battery connector** (DC INPUT) on the rear panel — it ships unplugged. Section 5.9, page 34.
5. **Plug in.** Power cord to the utility receptacle; loads, still switched off, to the output receptacles. Section 5.10, page 34.
6. **Start.** Hold ON for 1 s, wait about 10 s, then switch the loads on, largest first. Leave the UPS on utility power for 5 hours before relying on the full runtime. Section 6.2, page 37.

0 ms	LiFePO4	11–23 min	5 years
transfer to battery, online double conversion	lithium battery inside the 2U chassis, 12–15 year design life	runtime at full load	warranty, UPS and battery

CONTENTS

Contents

1	**Safety**	**7**
1.1	General	7
1.2	UPS safety	7
1.3	Battery safety	8
1.4	Electrostatic discharge (ESD)	8
1.5	Measuring with power on	9
1.6	Installation and service safety	9
1.7	Operating environment	10
1.8	Standards and compliance	10
2	**Product overview**	**12**
2.1	Introduction	12
2.2	Models covered	12
2.3	Key features	13
2.4	How LUMINA is built	14
2.5	Front view and operation panel	15
2.6	LCD	17
2.7	Rear panels	18
2.8	Emergency power off (EPO)	19
2.9	Communication ports and the intelligent slot	19
2.10	How LUMINA works	22
3	**Display, settings and fault codes**	**23**
3.1	Reading the display	23
3.2	Changing the settings	23
3.3	Fault codes	24
4	**Planning the installation**	**25**
4.1	Sizing the load	25
4.2	Estimating the runtime	25
4.3	Running on a generator	25
5	**Installation**	**26**
5.1	Before you install	26
5.2	Site and environment	26
5.3	Input protection and branch circuit	27
5.4	Cable size	28
5.5	Unpacking and inspection	28
5.6	Mounting the UPS	28
5.7	Installing an option card	30
5.8	Where the connections are	31
5.9	Connecting the battery	34
5.10	Connecting the input and the loads	34
5.11	Checking the installation	36
6	**Operation**	**37**
6.1	Before starting	37
6.2	Starting the UPS	37
6.3	Shutting down the UPS	37
6.4	Battery test and buzzer	37

6.5 Operating modes 38

7 Maintenance and troubleshooting 39
7.1 Safety during maintenance 39
7.2 Preventive maintenance 39
7.3 Battery care 40
7.4 Replacing the battery 40
7.5 Troubleshooting 40

8 Network monitoring 42
8.1 The SNMP-L card 42
8.2 AEC monitoring software 42

9 Packaging, transport and storage 43
9.1 Packaging 43
9.2 Transport 43
9.3 Storage 43

A Technical specifications 44

B Runtime 46

C Acronyms and abbreviations 47

D Frequently asked questions 48

E Installation record 49

01

CHAPTER 1

Safety

Read this chapter before you install, operate or service the UPS. It collects the hazards of the LUMINA and the precautions that keep people and equipment safe. Safety messages also appear in the chapters where each task is described.

WARNING

IMPORTANT SAFETY INSTRUCTIONS — SAVE THESE INSTRUCTIONS. This manual contains important instructions for the LUMINA 1–3 kVA UPS that must be followed during installation, operation and maintenance.

1.1 General

Follow all instructions and observe every DANGER, WARNING and CAUTION message in this manual and on the unit. These messages add to — they do not replace — the electrical codes and safety rules in force where the UPS is installed: in the US, the National Electrical Code (NFPA 70) and local requirements.

NOTICE

Damage caused by failing to follow the safety instructions, or by design, installation or use that does not meet the applicable safety standards, is not covered by the warranty.

1.2 UPS safety

DANGER

Hazardous voltage. The input and output of the UPS carry lethal voltage. Contact can cause death or serious injury. Read this manual and the labels on the unit before installing or operating it. Only qualified, authorized personnel may remove covers or open the UPS.

DANGER

A damaged or faulty unit can cause electric shock or fire.

- Before operating the UPS, inspect it for damage or any other visible hazard.
- Check that all external equipment and connections are safe.
- Do not work on the UPS, its input or its output during a lightning storm. Provide lightning protection and a proper grounding system for the installation.

WARNING

Do not connect unbalanced loads, half-wave rectifier loads or inductive loads to the UPS output — for example air conditioners, blowers, motor starters, power drills, motors or fluorescent lamps.

⚠ WARNING

Keep fingers and tools away from the cooling fans while they turn.

⚠ WARNING

In case of fire, use a dry-chemical (powder) extinguisher. A liquid extinguisher can cause electric shock.

⚠ CAUTION

- Keep the air inlets, the air outlets and the area in front of the fans clear so the unit is always well ventilated.
- Do not let liquids or foreign objects enter the unit.

NOTICE

This is an EMC Class A product. In a residential environment it may cause radio interference; the user may need to take additional measures. See the FCC statement in Section 1.8.

1.3 Battery safety

LUMINA has an internal lithium iron phosphate (LiFePO4) battery, monitored by a battery management system (BMS). The battery is installed and wired at the factory. The only battery connection you make is the battery connector on the rear panel (Section 5.9).

⚠ CAUTION

Use only the battery supplied by AEC for your LUMINA model. Another battery can damage the UPS. Battery service and replacement are done by AEC service (Section 7.4).

⚠ WARNING

Lithium battery. Incorrect handling can cause fire, burns or injury.

- Do not open, crush, puncture or modify the battery. Do not dispose of it in fire.
- Never connect the battery positive (+) to the battery negative (–). Never touch two battery terminals, or two bare wire ends, at the same time.
- Keep the battery away from fire, heat sources and any electrical equipment that can produce sparks.
- If the UPS is damaged, swollen, unusually hot, or gives off smoke or an odor: do not touch it, unplug it only if this is safe, keep people away and call AEC service.

1.4 Electrostatic discharge (ESD)

⚠ CAUTION

Static electricity from the human body can damage sensitive components on the circuit boards and on the option cards. Before touching them, wear an anti-static wrist strap with its other end properly grounded.

1.5 Measuring with power on

DANGER

Hazardous voltage is present inside the unit. Accidental contact can cause electric shock. When you take measurements with power on, use protective equipment such as insulated gloves.

The measuring instrument must:

- have a range and ratings suited to the site;
- be connected correctly, following good practice, to avoid arcing.

1.6 Installation and service safety

High temperatures and high voltages are present inside the UPS. During installation, operation and maintenance, follow the applicable safety regulations and procedures to avoid injury and damage. The safety messages in this manual supplement local safety regulations.

CAUTION

- Installation and wiring must be done by qualified personnel, so that every electrical connection meets the applicable codes and standards.
- Installers must be trained, know all the safety precautions and use the correct procedures before installing, operating or servicing the UPS.

DANGER

Do not connect or disconnect power cables before the power is switched off. Before wiring, make sure that the cables and cable labels match the actual installation.

WARNING

Contact with high voltage or the utility supply, directly or through damp objects, can be fatal.

- Only authorized personnel may open the UPS.
- Before servicing, unplug the UPS from the utility supply and unplug the battery connector, then confirm with a voltmeter that the input power is off and the unit is safe.
- Even with all external power disconnected, the UPS holds a residual charge that can be lethal. Wait at least 10 minutes for it to discharge before opening the unit.
- The battery is not isolated from the AC input: hazardous voltage can exist between the battery terminals and ground.
- Remove watches, bracelets, rings and other conductive objects before working on the unit.
- Only persons qualified for high-voltage and AC power work may install, maintain or repair the power system.
- High leakage current: the UPS must be grounded before any electrical connection is made. Plug it only into a grounded receptacle.

WARNING

Do not drill holes in the unit. Drilling damages internal components, and metal chips that fall inside can short-circuit the circuit boards.

NOTICE

Any change to the system configuration, structure or components affects UPS performance. Contact AEC before making any change.

1.7 Operating environment

The environment affects the service life and reliability of the UPS. Do not use the UPS:

- where the temperature or relative humidity is outside the specifications — operating temperature 32–104 °F (0–40 °C) for full output, up to 140 °F (60 °C) with reduced output; relative humidity 0–95 %, non-condensing;
- in direct sunlight or where it can get wet;
- where it is exposed to vibration or impact;
- where there is dust, corrosive material, salt or flammable gas;
- in a closed or poorly ventilated space.

1.8 Standards and compliance

The UPS is designed according to the standards in Table 1-1. LUMINA is cETLus listed by Intertek to UL 1778 and CSA C22.2 No. 107.3 (Table A-1).

TABLE 1-1 Design standards

Standard	Subject
UL 1778	Uninterruptible power systems — safety (United States)
CSA C22.2 No. 107.3	Uninterruptible power systems — safety (Canada)
FCC Part 15, Subpart B	Radio-frequency emissions, Class A digital device (United States)
IEC 62040-1	UPS — general and safety requirements
IEC 62040-2	UPS — electromagnetic compatibility (EMC)
IEC 62040-3	UPS — performance and test requirements
IEC 61000-3-2 · IEC 61000-3-12	Harmonic currents (up to 16 A · above 16 A per phase)
IEC 61000-3-3 · IEC 61000-3-11	Voltage fluctuations and flicker
IEC 61000-4-2 to -4-8	Immunity to electrostatic discharge (-4-2), radiated fields (-4-3), fast transients / bursts (-4-4), surges (-4-5), conducted disturbances (-4-6) and power-frequency magnetic fields (-4-8)
IEC 63000	Restriction of hazardous substances (RoHS) — technical documentation

1.8.1 FCC statement

This equipment has been tested and found to comply with the limits for a Class A digital device, pursuant to Part 15 of the FCC Rules. These limits are designed to provide reasonable protection against harmful interference when the equipment is operated in a commercial environment. This equipment generates, uses and can radiate radio-frequency energy and, if not installed and used in accordance with this manual, may cause harmful interference to radio communications. Operation of this equipment in a residential area is likely to cause harmful interference, in which case the user will be required to correct the interference at his own expense.

Changes or modifications not expressly approved by AEC could void the user's authority to operate the equipment.

CHAPTER 2

02 Product overview

What LUMINA is, the models this manual covers, the controls on the front, the connections on the back, the communication options and how the UPS works.

2.1 Introduction

LUMINA is a high-frequency, online double-conversion UPS with an internal lithium iron phosphate (LiFePO4) battery, single-phase 120 V in and out. Its 2U chassis fits a 19-inch rack or stands upright as a tower (Figure 2-1). It protects file and enterprise servers, workstations, network and telecom equipment, data-center equipment and other loads that need clean, continuous power — in sectors such as finance, telecom, transportation and government services.



FIGURE 2-1 LUMINA as a tower on its stands (back) and as a 2U rack unit (front)

2.2 Models covered

This manual covers five ratings (Table 2-1). Each is available without a network card, or with the SNMP card fitted at the factory (-NC codes). Table 2-2 explains the ordering code printed on the rating label.

TABLE 2-1 LUMINA models and ordering codes

Model	Rating	Ordering code	With SNMP card	Output receptacles	UPS input
LUMINA 1K	1,000 VA / 900 W	LUM1000RT-2U-LI	LUM1000RT-2U-LI-NC	8 × NEMA 5-15R	IEC C14 inlet, power cord supplied
LUMINA 1.5K	1,500 VA / 1,350 W	LUM1500RT-2U-LI	LUM1500RT-2U-LI-NC	6 × NEMA 5-15R	IEC C14 inlet, power cord with NEMA 5-15P plug supplied
LUMINA 2K	2,000 VA / 1,800 W	LUM2000RT-2U-LI	LUM2000RT-2U-LI-NC	6 × NEMA 5-20R	IEC C20 inlet, power cord with NEMA 5-20P plug supplied
LUMINA 2.2K	2,200 VA / 1,980 W	LUM2200RT-2U-LI	LUM2200RT-2U-LI-NC	6 × NEMA 5-20R	IEC C20 inlet, power cord with NEMA 5-20P plug supplied
LUMINA 3K	3,000 VA / 2,700 W	LUM3000RT-2U-LI	LUM3000RT-2U-LI-NC	4 × NEMA 5-20R + 1 × NEMA L5-30R	Attached cord, NEMA L5-30P plug

The 1.5K is the 2K derated to 1,500 VA / 1,350 W so that it runs from a 15 A receptacle: the same 2U chassis, the same 48 V, 10.2 Ah battery and the same electronics, with an IEC C14 inlet, a power cord with NEMA 5-15P plug and NEMA 5-15R output receptacles. It follows the same runtime curve as the 1K, 2K and 3K at its own load: 11 min at full load, 27 min at half load (Table B-1).

The 2.2K carries the largest internal lithium battery (13.6 Ah, 979.2 Wh; Table A-2): 23 min at full load instead of 11 min for the 1K, 2K and 3K (Table B-1).

TABLE 2-2 How to read the ordering code — example LUM2000RT-2U-LI-NC

Part	Meaning
LUM	LUMINA series
2000	Rating in VA: 1000, 1500, 2000, 2200 or 3000
RT	Rack / tower: mounts in a 19-inch rack or stands as a tower
2U	Height: 2 rack units, 3.4 in (87 mm)
LI	Lithium battery inside (LiFePO4)
NC	Network card: the SNMP card is fitted at the factory. Codes without NC have a cover on the intelligent slot.

2.3 Key features

ONLINE DOUBLE CONVERSION

The load always runs from the inverter: the output is rebuilt from scratch, with 0 ms transfer to battery.

LITHIUM INSIDE

LiFePO4 battery built into the 2U chassis, with a design life of 12–15 years (3,000 cycles) — no external battery pack is needed for the rated runtime.

HIGH INPUT POWER FACTOR

Active power-factor correction (PFC) draws a clean, sinusoidal current and eases the load on the utility supply.

EFFICIENT AND COMPACT

High-frequency PWM conversion gives high efficiency (up to 92.6 %), small size and low weight, improving reliability and running cost.

COMPLETE PROTECTION

Output overvoltage, battery undervoltage, input overvoltage and triple overcurrent protection make the UPS robust on weak or disturbed supplies.

WIDE INPUT WINDOW

LUMINA stays on utility power down to 88 V at full load (60 V below 50 % load), so the battery is saved for real outages, cycled less and lasts longer.

USB MONITORING

With the USB port and UPS power-management software, a computer can monitor the UPS, read its electrical data and switch it on or off remotely.

NETWORK READY

The intelligent slot takes an optional SNMP card, or an RS-485 and dry-contact card, for network monitoring and building-management systems.

2.4 How LUMINA is built

LUMINA is one 2U steel chassis: the operation panel and the air grille at the front, a rack-mount bracket with handle on each side, the internal LiFePO4 battery and the electronics under the top cover, and every connection on the rear panel (Figure 2-2). Figure 2-3 shows the inside with the top cover lifted off. These two pictures are renders of the AEC 3D model of the LUMINA 2K; the photos and drawings in this manual show the real unit. All ratings look the same from the front.

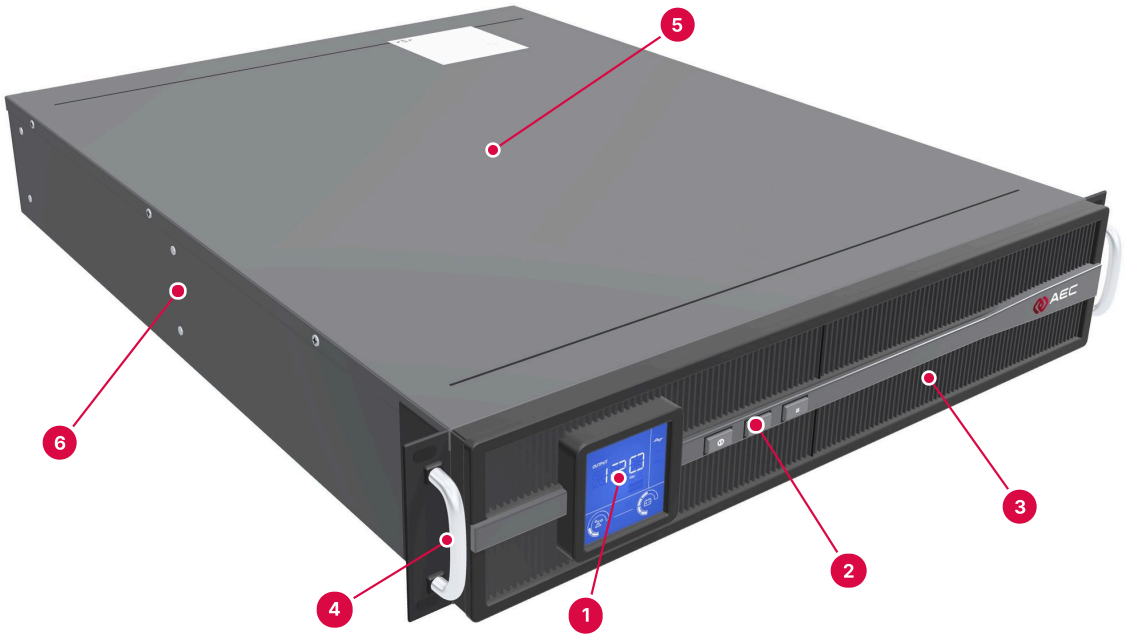

1	LCD (Section 2.6)	4	Rack-mount bracket with handle (one each side)
2	Keys ON, OFF and SELECT (Table 2-3)	5	Top cover
3	Front panel and air grille: cooling air in	6	Side of the chassis: bracket or tower-stand screws

FIGURE 2-2 LUMINA from the front left — render of the LUMINA 2K

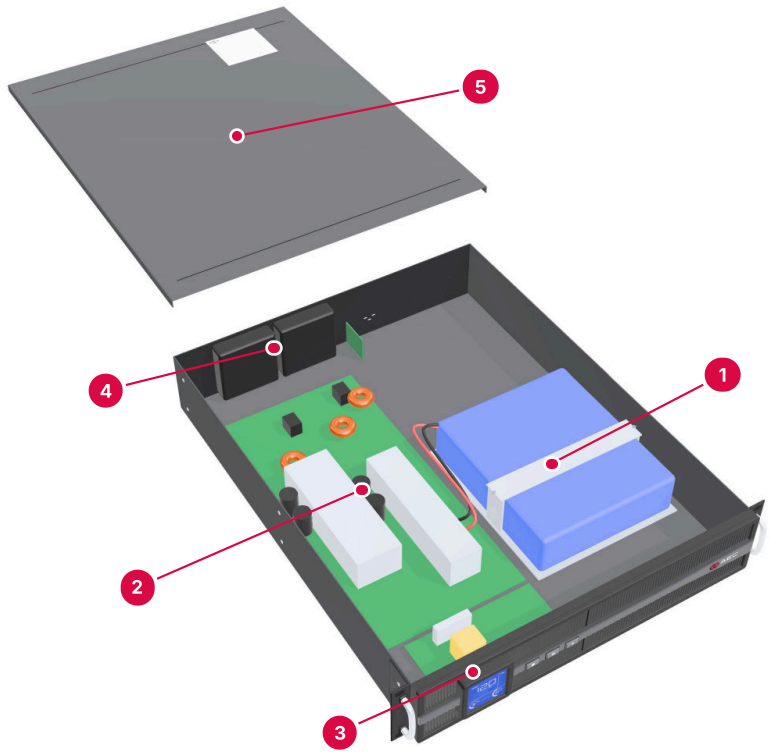

1	Internal lithium battery (LiFePO4)	4	Cooling fans, at the rear panel
2	Main control board	5	Top cover, lifted off
3	Display board, behind the operation panel		

FIGURE 2-3 Illustration — internal layout simplified: LUMINA 2K with the top cover lifted off

> ⚠ ***WARNING***
>
> The top cover is shown off for illustration only. Only qualified service personnel may open the UPS (Section 1.6).

2.5 Front view and operation panel

All LUMINA ratings look the same from the front; Figure 2-4 shows the LUMINA 1K with its rack-mount brackets fitted. The operation panel (Figure 2-5) has the LCD and three keys; Table 2-3 explains them.

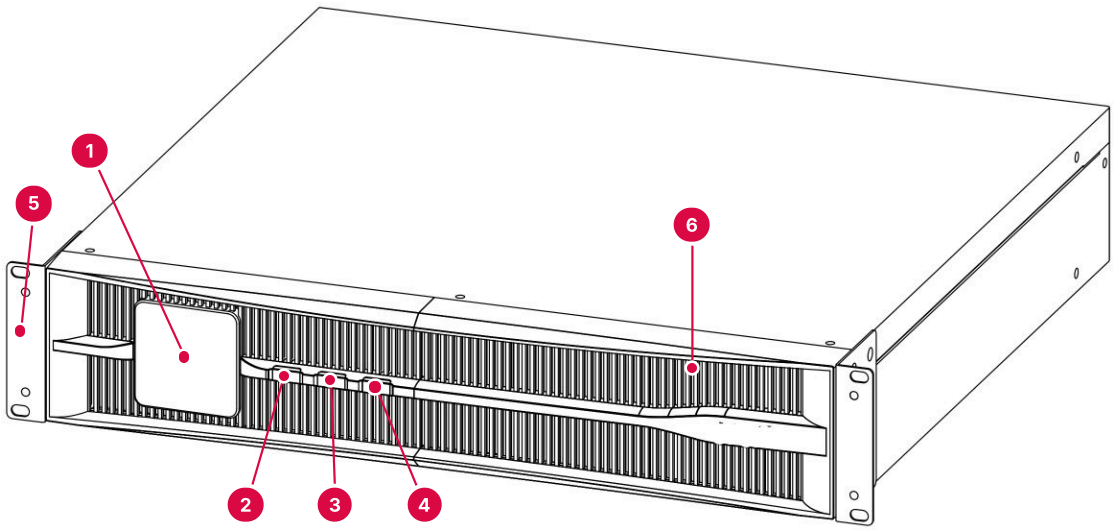

1. LCD (Section 2.6)
2. **ON** key
3. **OFF** key
4. **SELECT** key
5. Rack-mount bracket (one each side)
6. Front air inlet — keep clear

FIGURE 2-4 LUMINA front view (LUMINA 1K shown, rack brackets fitted)

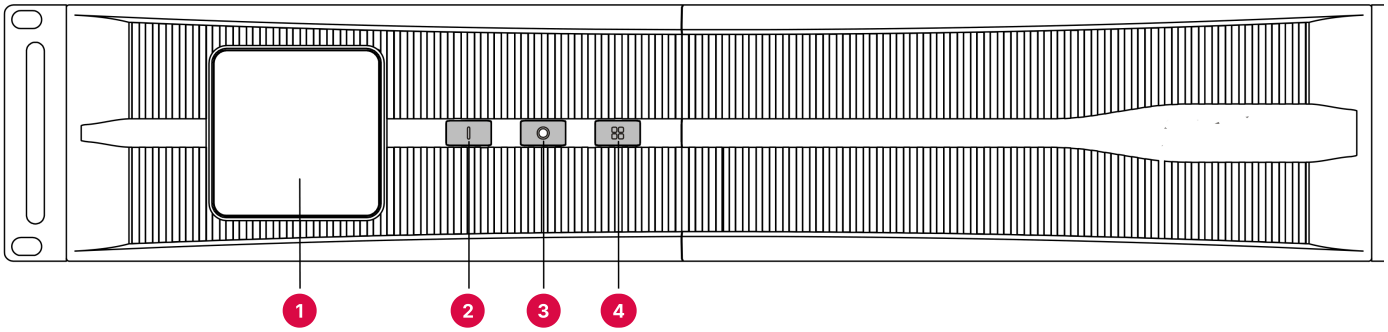

1. LCD
2. **ON** key — symbol: vertical bar
3. **OFF** key — symbol: circle
4. **SELECT** key — symbol: four squares

FIGURE 2-5 Operation panel

TABLE 2-3 Operation panel keys

No.	Key	When	Action
2	**ON**	UPS off	Hold 1 s: the UPS turns on.
		Utility mode	Hold 3 s: battery test.
		Battery mode	Hold 3 s: silence the buzzer (the utility-failure alarm). Hold 3 s again: buzzer back on.
		Battery mode, low-battery alarm	Hold 3 s: silence the buzzer. Hold 3 s again: buzzer back on.
		Settings open	Hold more than 1 s: confirm the flashing setting (Section 3.2).
3	**OFF**	UPS on	Hold 1 s: the UPS turns off.

No.	Key	When	Action
4	SELECT	UPS on	Press: next reading — output voltage and frequency, input voltage and frequency, battery voltage, internal temperature, load percentage, fault information (Section 3.1).
		UPS on	Hold 5 s: open the settings (Section 3.2).

2.6 LCD

Figure 2-6 shows the LCD in the rack (horizontal) orientation with every segment lit. In use, only the segments for the present state light.

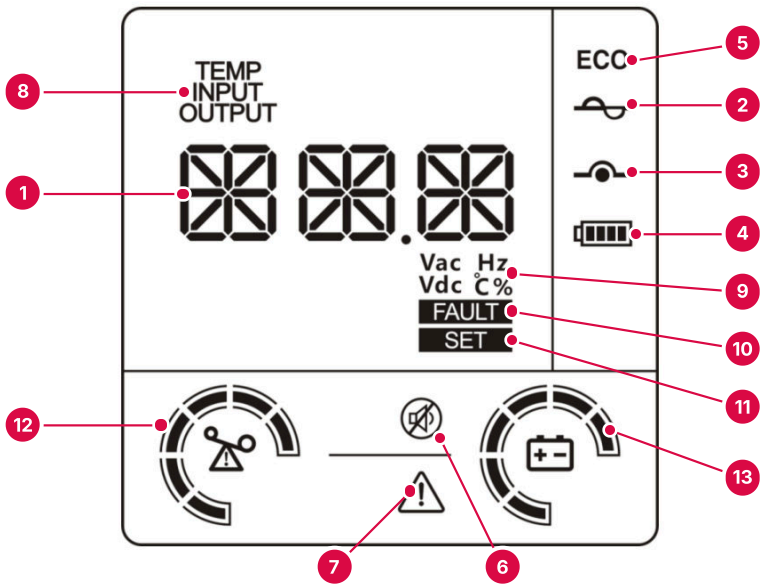

1. Digits: the reading, a fault code or a setting
2. Utility mode: the load runs on the inverter, fed from the utility
3. Bypass mode: the load runs on the utility through the bypass
4. Battery mode: the load runs on the battery
5. ECO mode
6. Buzzer silenced
7. UPS fault
8. What the digits show: TEMP, INPUT or OUTPUT
9. Unit of the reading: Vac, Vdc, Hz, °C or %
10. FAULT: the digits show a fault code
11. SET: the settings are open
12. Load level bars (all flash on overload)
13. Battery level bars (frame flashes when nearly exhausted)

FIGURE 2-6 LCD, rack orientation, all segments shown

2.7 Rear panels

The rear panel differs by rating: Figure 2-7 (1K), Figure 2-8 (2K and 2.2K, which share the same panel) and Figure 2-9 (3K). The 1.5K is built on the 2K chassis, with two cooling fans and the same connections as Figure 2-8, except two: the AC INPUT is an IEC C14 inlet, for the power cord with NEMA 5-15P plug supplied, and the output receptacles are 6 × NEMA 5-15R (15 A); it is not pictured. The labels on the unit name each connection. The intelligent slot holds a cover as standard; on -NC models the SNMP card is fitted in it. Photos of the 1K and 3K are in Section 5.10.

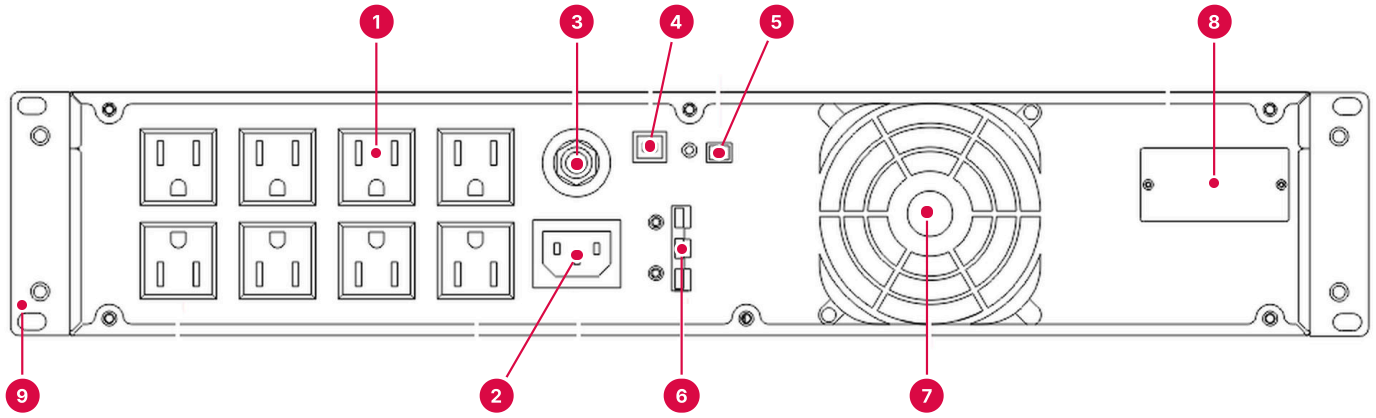

1. Output receptacles, 8 × NEMA 5-15R (15 A)
2. AC INPUT inlet, IEC C14 (power cord supplied)
3. CIRCUIT PROTECTOR — input over-current protector
4. USB port (type B)
5. EPO connector, 2 terminals (Section 2.8)
6. DC INPUT — battery connector, shipped unplugged (Section 5.9)
7. Cooling fan
8. INTELLIGENT SLOT — cover, or optional card (Section 2.9)
9. Rack-mount bracket

FIGURE 2-7 Rear panel — LUMINA 1K

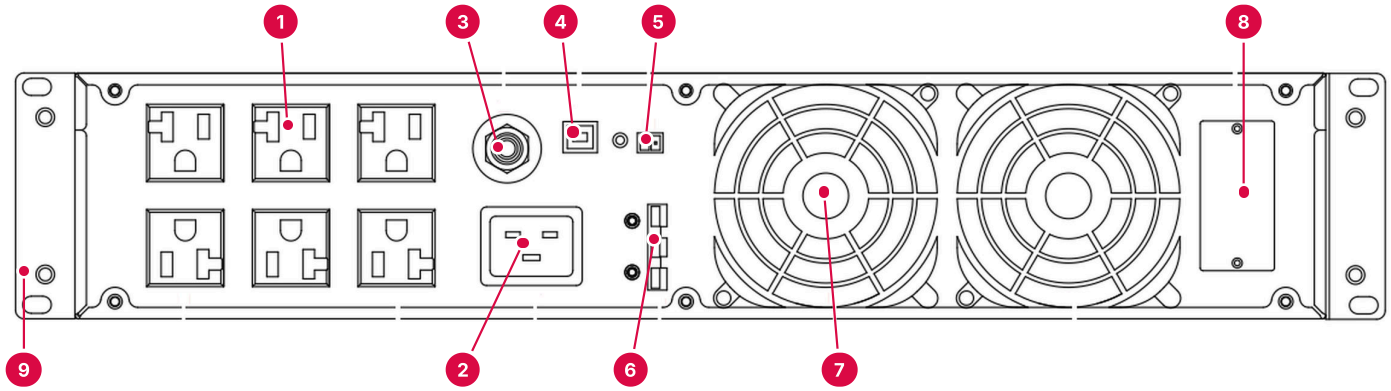

1. Output receptacles, 6 × NEMA 5-20R (20 A)
2. AC INPUT inlet, IEC C20 (power cord with NEMA 5-20P plug supplied)
3. CIRCUIT PROTECTOR — input over-current protector
4. USB port (type B)
5. EPO connector, 2 terminals (Section 2.8)
6. DC INPUT — battery connector, shipped unplugged (Section 5.9)
7. Cooling fans
8. INTELLIGENT SLOT — cover, or optional card (Section 2.9)
9. Rack-mount bracket

FIGURE 2-8 Rear panel — LUMINA 2K and LUMINA 2.2K

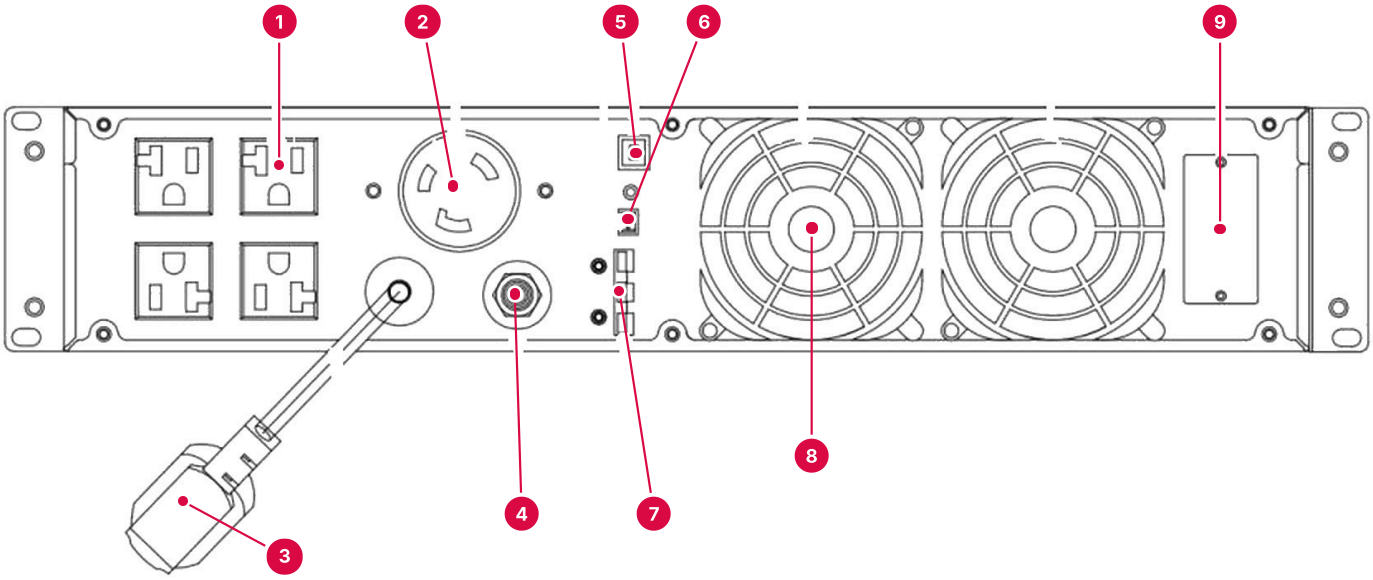

1. Output receptacles, 4 × NEMA 5-20R (20 A)
2. Output receptacle, 1 × NEMA L5-30R twist-lock (30 A)
3. AC INPUT — attached cord with NEMA L5-30P twist-lock plug
4. CIRCUIT PROTECTOR — input over-current protector
5. USB port (type B)
6. EPO connector, 2 terminals (Section 2.8)
7. DC INPUT — battery connector, shipped unplugged (Section 5.9)
8. Cooling fans
9. INTELLIGENT SLOT — cover, or optional card (Section 2.9)

FIGURE 2-9 Rear panel — LUMINA 3K

2.8 Emergency power off (EPO)

The EPO connector on the rear panel (item 5 in Figure 2-7 and Figure 2-8, item 6 in Figure 2-9) lets an external emergency switch shut the UPS output down. Use a normally open switch, so that pressing it closes the circuit.

- **To shut the output down:** connect (short) the two terminals of the EPO connector. Both the bypass output and the inverter output switch off, and the LCD shows **EPO** (Figure 3-5).
- **To restore the output:** disconnect the two terminals, turn the UPS off with OFF, then turn it on again with ON.

⚠ *CAUTION*

The EPO cuts the power to every load at once. Use it only in an emergency.

2.9 Communication ports and the intelligent slot

LUMINA has a USB port as standard, and an intelligent slot that accepts one optional card. To fit a card, follow Section 5.7.

TABLE 2-4 Communication options

Port	Standard or option	Use
USB (type B)	Standard	Connects to a computer running UPS power-management software: monitoring, electrical data, remote on/off.
SNMP card in the intelligent slot	Option (fitted on -NC models)	Network monitoring, e-mail alarms, remote on/off (Chapter 8).

Port	Standard or option	Use
RS-485 and dry-contact card in the intelligent slot	Option	Three relay outputs and an RS-485 port for building-management systems.
EPO connector	Standard	Emergency power off (Section 2.8).

2.9.1 SNMP card (optional)

The SNMP card lets you monitor the UPS over the network — input voltage and frequency, output voltage and frequency, load and more — and switch it on or off remotely (Figure 2-10). Its set-up is in Section 8.1.

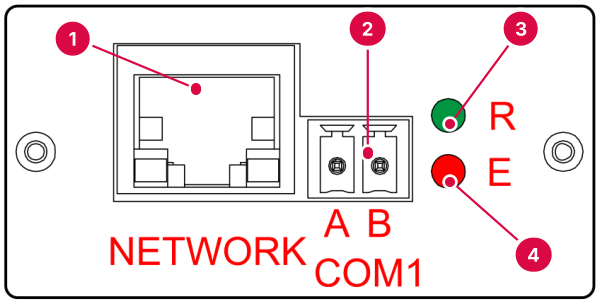

1. NETWORK — RJ45 Ethernet port: to your network switch (Figure 2-11)
2. COM1 — two-pole terminal A / B (RS-485), for an optional sensor
3. R — green status indicator
4. E — red alarm indicator

FIGURE 2-10 SNMP card plate

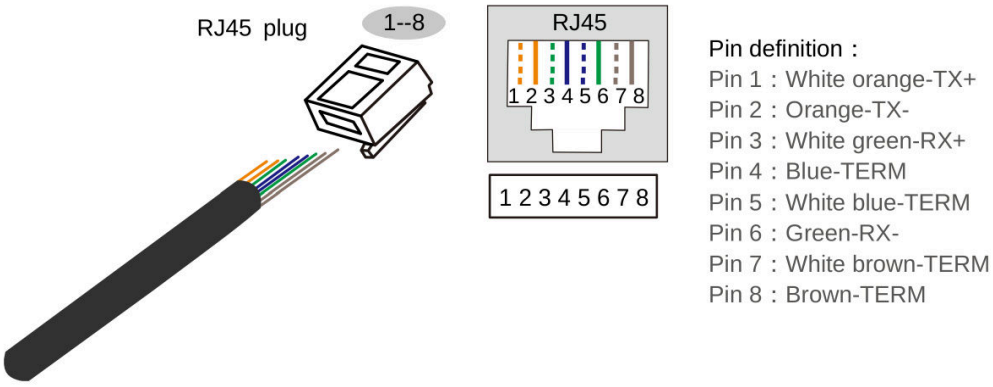

FIGURE 2-11 Network cable: standard RJ45 pin-out (T568B colors)

2.9.2 RS-485 and dry-contact card (optional)

The card has an 8-pin terminal block (Figure 2-12). Pins 1–6 are three relay outputs; pins 7–8 are the RS-485 port (Figure 2-13 and Table 2-5).

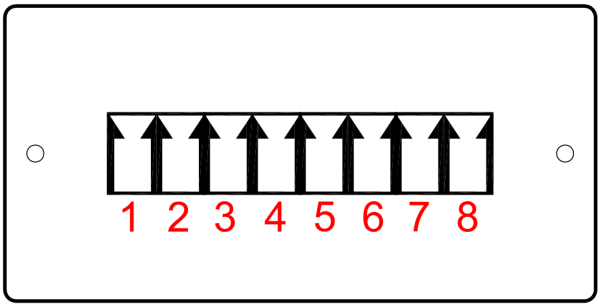

FIGURE 2-12 RS-485 and dry-contact card: terminal block, pins 1 to 8

TABLE 2-5 Pin assignment, RS-485 and dry contacts

Pin	Signal	Relay and jumper
1	Utility failure — common	RLY1, jumper CN1
2	Utility failure — NC or NO	RLY1, jumper CN1
3	Battery low — common	RLY2, jumper CN2
4	Battery low — NC or NO	RLY2, jumper CN2
5	UPS fault — common	RLY3, jumper CN3
6	UPS fault — NC or NO	RLY3, jumper CN3
7	RS-485 A	—
8	RS-485 B	—

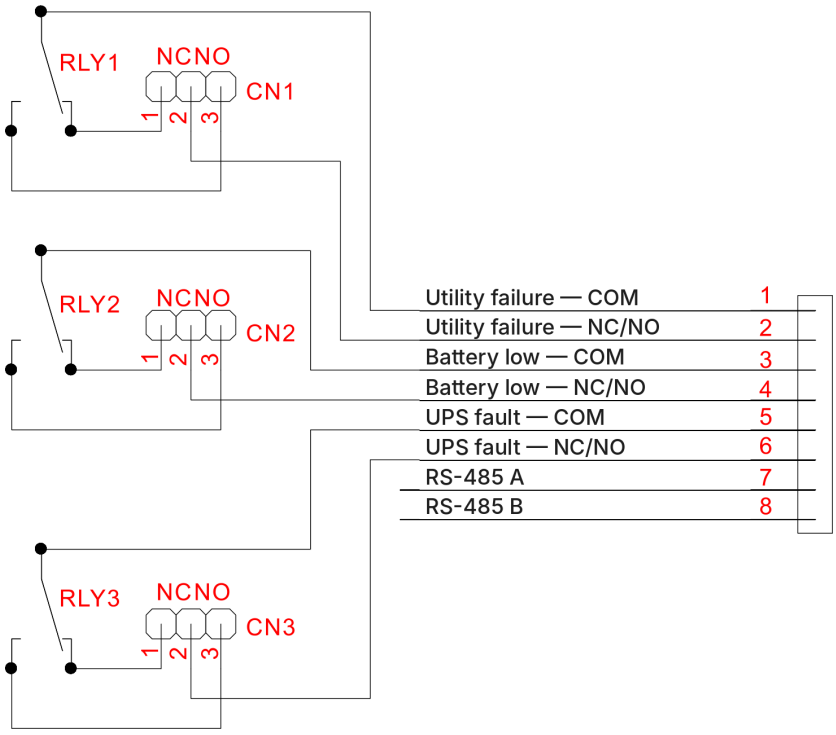

FIGURE 2-13 Relay outputs and jumpers CN1–CN3 on the RS-485 and dry-contact card

- Jumpers CN1, CN2 and CN3 set each relay output as normally closed (NC) or normally open (NO). The default is normally closed: pin 1 of the jumper connected to pin 2. To make an output normally open, connect pin 2 to pin 3.
- Signals connected to the dry contacts must stay below 60 V DC or 42 V AC RMS, and below 1.25 A.

2.10 How LUMINA works

With utility power present, the PFC rectifier converts the AC input into a regulated ±180 V DC bus. The inverter (DC/AC) turns the bus into a stable 110 or 120 V AC output, while the charger keeps the battery charged. When utility power fails, a DC/DC boost converter raises the battery voltage to ±190 V DC and the inverter keeps running with no interruption (Figure 2-14). The transfer switch moves the load to the bypass (the utility) on overload or on an inverter fault, and in ECO mode.

The inverter uses a half-bridge topology; the DC/DC stage uses a push-pull or boost circuit; the PFC stage is an active power-factor correction circuit.

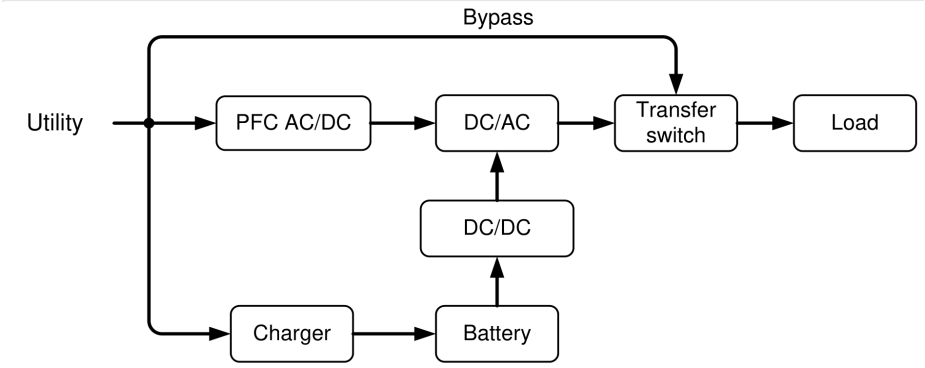

FIGURE 2-14 Block diagram

CHAPTER 3

03 Display, settings and fault codes

How to read the values on the LCD, how to change the three settings from the front panel, and how to read the fault codes.

3.1 Reading the display

With the UPS on, press SELECT (Figure 2-5, item 4) to step through the readings in Table 3-1. The word above the digits and the unit beside them (Figure 2-6, items 8 and 9) tell you what the number is.

TABLE 3-1 Readings, in the order SELECT shows them

Reading	Word lit	Unit lit
Output voltage	OUTPUT	Vac
Output frequency	OUTPUT	Hz
Input voltage	INPUT	Vac
Input frequency	INPUT	Hz
Battery voltage	—	Vdc
Internal temperature	TEMP	°C
Load, % of the rating	—	%
Fault information (only when there is a fault)	—	FAULT

3.2 Changing the settings

Three settings can be changed from the front panel: **ECO / INV** (operating mode), **RCK / TWR** (LCD orientation for rack or tower) and the **output voltage** (110 or 120 V).

1. Press and hold SELECT for 5 s. SET lights and the settings open.
2. Press SELECT to move to the setting you want. Its three letters flash on the LCD.
3. Press and hold ON for more than 1 s to confirm. The setting is saved and the UPS leaves the settings.
4. To leave without changing anything, do nothing: the UPS leaves the settings automatically after 20 s.

3.2.1 ECO mode and INV mode

ECO (energy-saving operation) and INV (normal online inverter operation) are chosen on the same page. When “ECO” or “INV” flashes, press and hold ON for more than 1 s to select it. The LCD then shows the mode as in Figure 3-1 and Figure 3-2. In ECO mode the load runs on the bypass while the utility is good: efficiency is higher, but the load is not protected from disturbances. Use INV mode for critical loads.

3.2.2 Rack (RCK) or tower (TWR) display

The default is RCK. To set the LCD for a tower installation, select “TWR” and press and hold ON for more than 1 s; to return to rack, select “RCK” the same way (Figure 3-3, Figure 3-4).

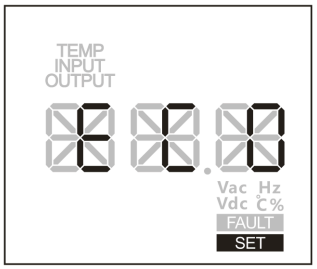

FIGURE 3-1 ECO selected

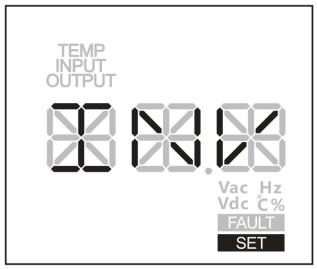

FIGURE 3-2 INV selected

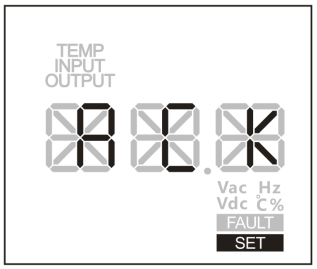

FIGURE 3-3 RCK (rack) display

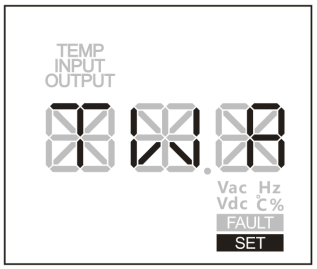

FIGURE 3-4 TWR (tower) display

3.2.3 Output voltage

Select the output voltage, 110 V or 120 V, the same way: the digits show the voltage while it flashes. After saving, check it: press SELECT until OUTPUT and Vac light.

3.3 Fault codes

The UPS detects these faults: emergency power off (EPO), DC bus voltage fault, IGBT over-temperature, fan fault (fan blocked or damaged), output fault (overload or short circuit), repeated inverter faults and battery fault (battery over- or undervoltage). Each one appears on the LCD as a three-letter code with FAULT lit, as shown below (rack orientation). To see the code, press SELECT until FAULT lights. What to do for each code: Table 7-4.

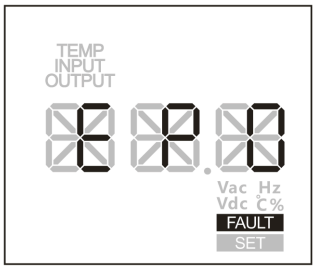

FIGURE 3-5 EPO — emergency power off

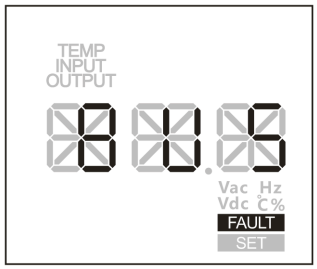

FIGURE 3-6 BUS — DC bus voltage fault

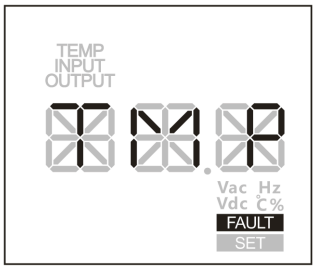

FIGURE 3-7 TMP — IGBT over-temperature

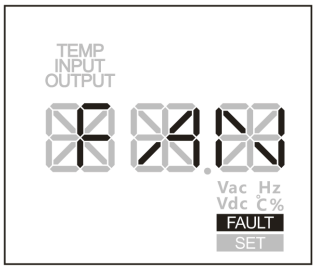

FIGURE 3-8 FAN — fan fault

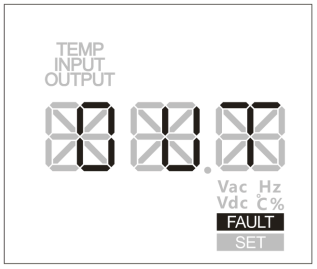

FIGURE 3-9 OUT — output fault

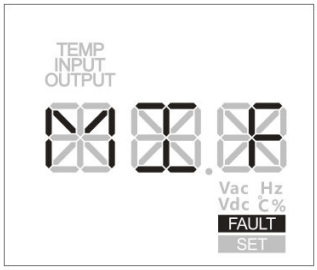

FIGURE 3-10 MIF — repeated inverter faults

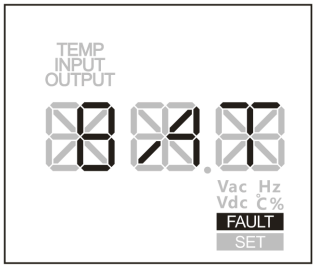

FIGURE 3-11 BAT — battery fault

CHAPTER 4

04 Planning the installation

Sizing the load, estimating the runtime and running on a generator — before you install.

4.1 Sizing the load

LUMINA delivers up to 900, 1,350, 1,800, 1,980 or 2,700 W (output power factor 0.9). Size the UPS on the watts the loads draw.

1. List every device that will run on the UPS.
2. Read its power in watts on the label or in the data sheet. If only volts and amps are given, multiply them (V × A): that gives VA, which is equal to or higher than the watts, so the estimate is on the safe side.
3. Add the watts and keep the total at or below 80 % of the rating: the margin covers start-up currents, growth and battery ageing.
4. Measure once the UPS runs: press SELECT until % lights to read the real load (Section 3.1).

TABLE 4-1 Worked example — LUMINA 2K

Load	Watts
Two 1U servers	600 W
Network switch	120 W
Firewall	60 W
NAS	150 W
Total	**930 W — 52 % of 1,800 W**

Runtime: about 27 minutes at 50 % load, a little less at 52 % — read it in Table B-1.

4.2 Estimating the runtime

1. Work out the load as a percentage of the rated output power (W).
2. Find the two load rows either side of it in Table B-1 and estimate between them.
3. Allow a margin: the runtime is shorter with a battery that is old, cold, hot or not fully charged.
4. Remember that halving the load roughly doubles the runtime, or more.

4.3 Running on a generator

The active PFC input loads a generator cleanly, and the wide input window (60–148 V depending on the load, 50/60 Hz ±10 %) rides through the swings of a standby generator.

- As a general rule, choose a generator rated at least 1.5 times the UPS input power, to cover the battery recharge as well.
- Let the generator reach stable voltage and frequency before it feeds the UPS; the UPS stays on battery until the input is within range.
- If the UPS keeps returning to battery on the generator, the generator is too small or unstable.

05

CHAPTER 5

Installation

Preparing the site and the branch circuit, unpacking, mounting the UPS in a rack or as a tower, fitting an option card, plugging in the battery connector, the utility supply and the loads, and checking the work.

5.1 Before you install

LUMINA is compact: it can stand on any flat, level surface without fixing. Leave 12–20 in (300–500 mm) of free space around the UPS and 20 in (500 mm) above it, for operation, service and cooling, and keep the room well ventilated. The battery lasts longest at about 68 °F (20 °C); where possible, air-condition the room. Follow the rules in Figure 5-1.

- Place the UPS on a flat, level floor — never on a sloped or uneven surface.
- Do not place objects on or around the UPS that block the vents. Do not sit on the UPS.
- Keep the UPS out of direct sunlight, rain and damp locations.
- Do not install the UPS where corrosive gases are present.
- Keep the UPS away from fire and from electrical equipment that can produce sparks.

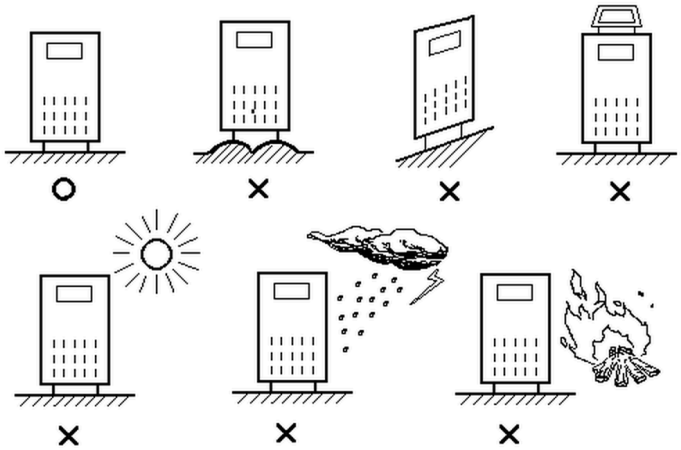

FIGURE 5-1 Installation do's (o) and don'ts (×)

5.2 Site and environment

⚠ CAUTION

Before installing the UPS, make sure the site and its environment meet the basic conditions below for safe, normal operation. Correct anything that does not, then install the UPS.

SITE

- Fire-fighting equipment is available at the site.
- The utility supply feeding the UPS has a suitable branch circuit and receptacle (Section 5.3).
- No flammable or explosive materials are stored at the site.
- The grounding is ready before installation; the neutral-to-ground voltage of the supply is below 5 V.
- Construction work is finished, the floor is hardened, and the site is clean and dust-free.

- Working space in front of the rack or the UPS meets NEC 110.26.

ENVIRONMENT

- Operating temperature: 32–104 °F (0–40 °C) at full output; 104–140 °F (40–60 °C) possible for long periods with reduced output.
- Relative humidity: 0–95 %, non-condensing.
- Cooling: forced air (internal fans).
- Altitude: up to 6,560 ft (2,000 m) at full output; above that the output must be reduced — consult AEC.
- Mounting: free from vibration, tilted no more than 5°.
- Pollution degree: 2.

Install the UPS in a well-ventilated, dust-free place with suitable temperature and humidity. Recommended: 68–77 °F (20–25 °C) and about 50 % relative humidity.

⚠ CAUTION

Do not install the UPS where conductive (metallic) dust is present. The UPS is designed for non-tropical climates only.

5.3 Input protection and branch circuit

Plug the UPS into a grounded receptacle on its own branch circuit. The breaker of that circuit has the same rating as the plug of the UPS (Table 5-1) and is never larger: NEC 210.21(B) requires the receptacle to match the rating of the branch circuit. The maximum input current in the table is the factory value at low input voltage, full load and full battery recharge; it is not a continuous current.

- Use a breaker without ground-fault (GFCI) or leakage protection: it could trip unnecessarily.
- Do not use an extension cord or a power strip on the UPS input.
- Use copper conductors rated 75 °C (167 °F) and terminations rated 75 °C (NEC 110.14(C)).

TABLE 5-1 Input current and branch circuit

Model	UPS input	Max. input current (factory data)	Building breaker, 1-pole	Receptacle	Branch conductor, Cu (NEC 240.4(D))
LUMINA 1K	IEC C14 inlet, power cord supplied	12 A	15 A	NEMA 5-15R	14 AWG
LUMINA 1.5K	IEC C14 inlet, power cord with NEMA 5-15P plug supplied	17.5 A	15 A	NEMA 5-15R	14 AWG
LUMINA 2K	IEC C20 inlet, power cord with NEMA 5-20P plug supplied	24 A	20 A	NEMA 5-20R	12 AWG
LUMINA 2.2K	IEC C20 inlet, power cord with NEMA 5-20P plug supplied	26 A	20 A	NEMA 5-20R	12 AWG
LUMINA 3K	Attached cord, NEMA L5-30P plug	36 A	30 A	NEMA L5-30R	10 AWG

⚠ WARNING

Breaker = plug rating. The maximum input current is reached only for short periods, at low input voltage with full load while the battery recharges; the breaker that matches the plug carries it. Do not install a larger breaker and do not change or adapt the plug.

5.4 Cable size

The power cord of the UPS is supplied. If you make up AC input or AC output cables yourself, size them from Table 5-2, choosing the next size up. The values are for cables about 16 ft (5 m) long; longer cables need a larger size. The branch circuit itself is sized to the NEC (Table 5-1).

TABLE 5-2 Recommended cable cross-section

Cross-section (mm²)	1	1.5	2.5	4	6	10	16	25
Nearest AWG size	18	16	14	12	10	8	6	4
Ampacity at 77 °F (25 °C), rubber insulation (A)	8	12	20	28	42	70	96	125
Ampacity at 77 °F (25 °C), PVC insulation (A)	6	9	15	20	30	50	64	100

AWG sizes are the nearest standard sizes. In the US, conductors are sized to the National Electrical Code; the installer's calculation prevails.

i NOTE The cables supplied with the UPS are good-quality cables that meet the safety requirements and carry international and UL approvals.

5.5 Unpacking and inspection

1. Inspect the unit for shipping damage. Report any damage to the carrier immediately.
2. Check the accessories against the packing list: the power cord (1K, 1.5K, 2K, 2.2K), the battery connector, the rack mounting parts and the tower stands. Report anything missing or wrong to your AEC dealer immediately.
3. Keep the carton and the packing: the UPS contains a lithium battery and must travel in its original packaging (Section 9.2).

⚠ CAUTION

The 2.2K weighs 42.1 lb (19.1 kg) and the 3K 37.7 lb (17.1 kg). Lift them with two people, especially when sliding them into a rack.

5.6 Mounting the UPS

i NOTE All LUMINA ratings mount the same way; the pictures show the LUMINA 1K.

5.6.1 Rack mounting

1. Fit the two mounting brackets to the sides of the UPS, at the front, with four M4 × 8 screws (Figure 5-2).
2. With a second person, slide the UPS into the rack (Figure 5-3).
3. Secure the brackets to the rack posts with screws (Figure 5-4).

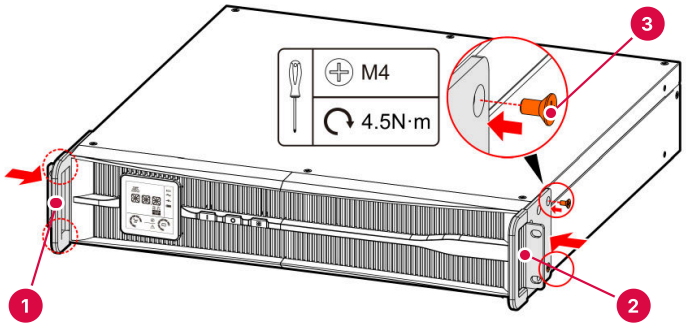

1. Mounting bracket, left
2. Mounting bracket, right
3. M4 × 8 screws, two per bracket — 4.5 N·m (40 lbf·in)

FIGURE 5-2 Rack step 1 — fit the mounting brackets

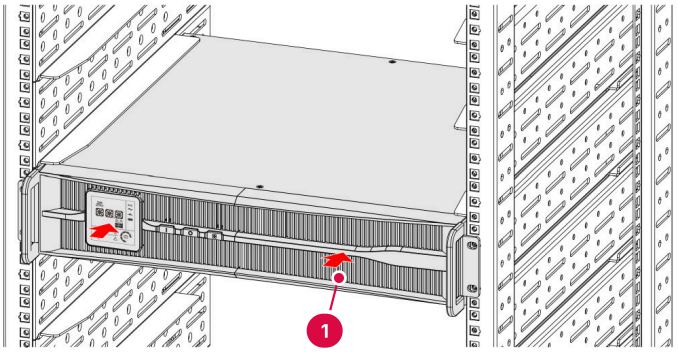

1. Push the UPS in at the front

FIGURE 5-3 Rack step 2 — slide the UPS into the rack

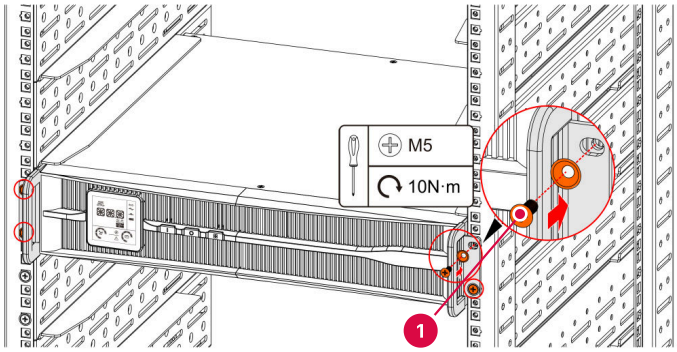

1. Rack screws, two each side — M5, 10 N·m (89 lbf·in)

FIGURE 5-4 Rack step 3 — screw the brackets to the rack

5.6.2 Tower mounting

1. Stand the UPS upright, with the battery side at the top and the operation panel at the bottom (Figure 5-5).
2. Join the two halves of each stand (Figure 5-6).
3. Fix the two stands to the UPS with two M4 × 10 screws (Figure 5-7).
4. Set the UPS on its stands (Figure 5-8), then set the LCD to tower orientation (TWR) — see Section 3.2.2.

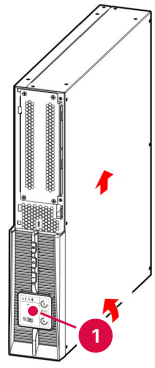

1. Operation panel at the bottom

FIGURE 5-5 Tower step 1 — stand the UPS upright

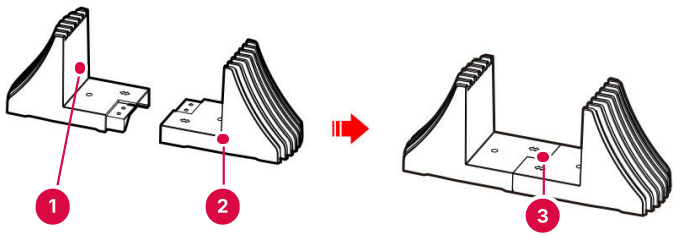

1. Stand half
2. Stand half
3. Assembled stand

FIGURE 5-6 Tower step 2 — join the two halves of each stand

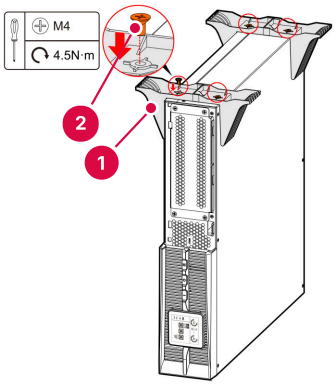

1. Stand
2. M4 × 10 screw, 4.5 N·m (40 lbf·in)

FIGURE 5-7 Tower step 3 — fix the stands

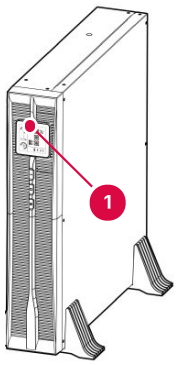

1. Operation panel: set the LCD to TWR

FIGURE 5-8 Tower step 4 — UPS on its stands

5.7 Installing an option card

All LUMINA ratings take the card the same way; the pictures show the LUMINA 1K. The card fits the intelligent slot on the rear panel (Section 2.7).

> **⚠ CAUTION**
>
> Fit or remove a card with the UPS switched off and unplugged. Touch the UPS chassis first to discharge static electricity (Section 1.4).

1. Remove the two screws and pull out the standard slot cover. Keep the screws (Figure 5-9).
2. Insert the option card in the slot guides, push it until it is fully seated, and secure it with the two screws (Figure 5-10).
3. Connect the communication cable — the network cable for the SNMP card, or the terminal plug for the RS-485 and dry-contact card (Figure 5-11).

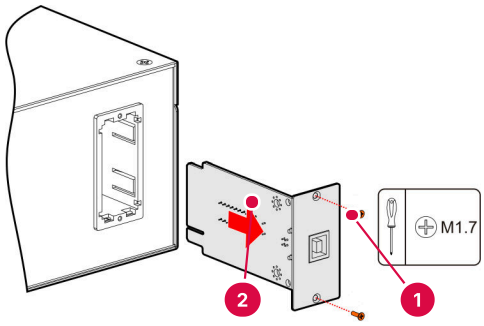

1. Screws (keep them)
2. Slot cover

FIGURE 5-9 Removing the slot cover

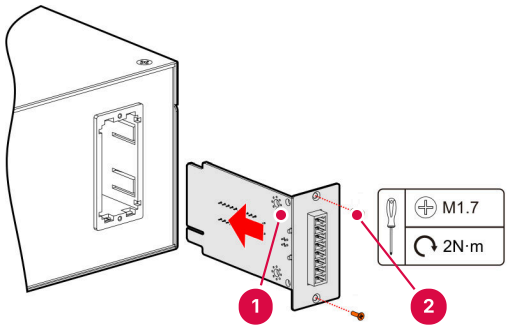

1. Option card
2. Screws, M1.7, 2 N·m (18 lbf·in)

FIGURE 5-10 Installing the option card

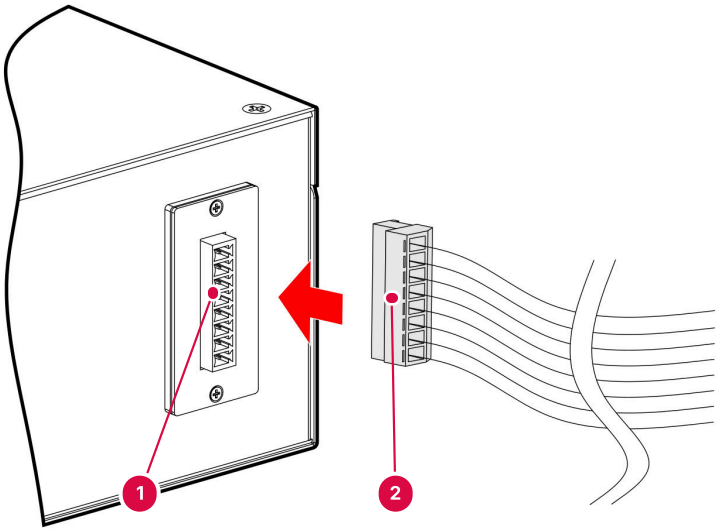

1. Terminal block of the card (Table 2-5)
2. Cable plug

FIGURE 5-11 Connecting the communication cable (RS-485 and dry-contact card shown)

5.8 Where the connections are

LUMINA has no wiring terminals for power: the input, the outputs and the battery are plug-in connections, all on the rear panel (Figure 5-12). Figure 5-13, Figure 5-14 and Figure 5-15 number them as the rear-panel drawings in Section 2.7 do, and Table 5-3 gives the connector of each. The LUMINA 1.5K is not pictured: its panel is the 2K panel with an IEC C14 inlet and 6 × NEMA 5-15R receptacles (Section 2.7). The pictures are renders of the AEC 3D model, shown with the battery connector plugged in and the slot cover fitted.



1. Rear panel: all connections (Figure 5-14)
2. Output receptacles
3. Intelligent slot

FIGURE 5-12 The rear panel, seen from the rear left — render of the LUMINA 2K

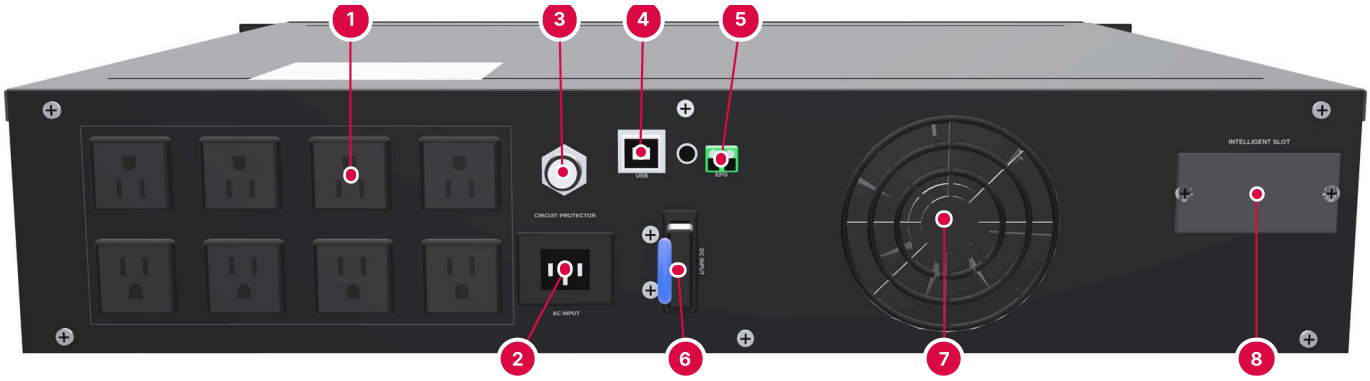

1. Output receptacles, 8 × NEMA 5-15R
2. AC INPUT inlet, IEC C14
3. CIRCUIT PROTECTOR
4. USB port (type B)
5. EPO connector, 2 terminals
6. DC INPUT — battery connector
7. Cooling fan
8. INTELLIGENT SLOT, cover fitted

FIGURE 5-13 Rear-panel connections — LUMINA 1K (render)

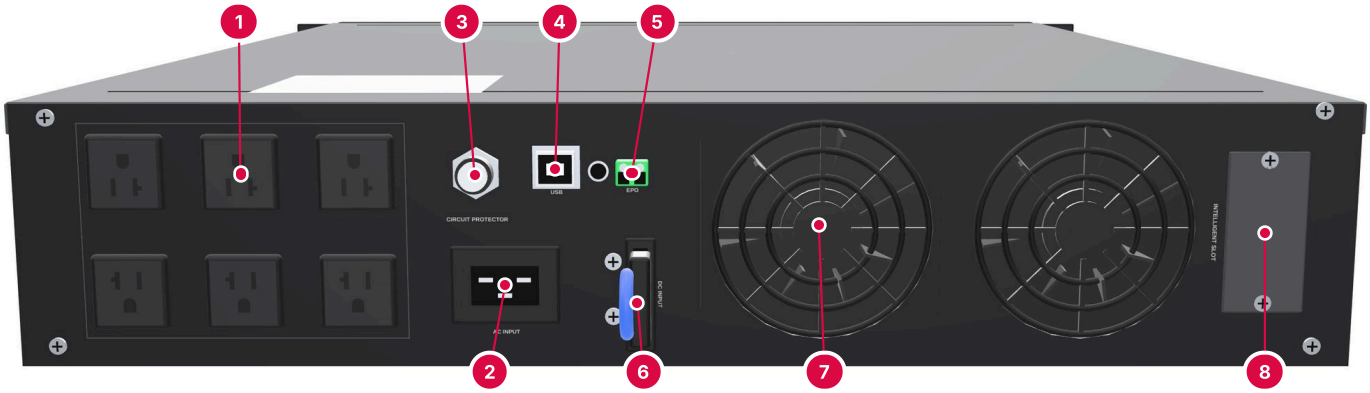

1. Output receptacles, 6 × NEMA 5-20R
2. AC INPUT inlet, IEC C20
3. CIRCUIT PROTECTOR
4. USB port (type B)
5. EPO connector, 2 terminals
6. DC INPUT — battery connector
7. Cooling fans
8. INTELLIGENT SLOT, cover fitted

FIGURE 5-14 Rear-panel connections — LUMINA 2K and 2.2K (render)

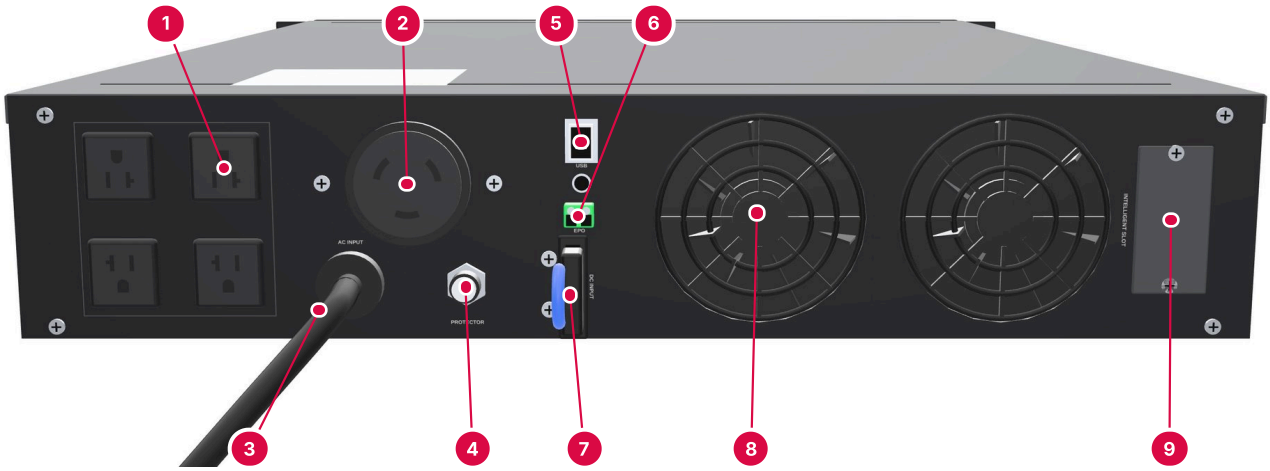

1. Output receptacles, 4 × NEMA 5-20R
2. Output receptacle, NEMA L5-30R twist-lock
3. AC INPUT — attached cord with NEMA L5-30P plug
4. CIRCUIT PROTECTOR
5. USB port (type B)
6. EPO connector, 2 terminals
7. DC INPUT — battery connector
8. Cooling fans
9. INTELLIGENT SLOT, cover fitted

FIGURE 5-15 Rear-panel connections — LUMINA 3K (render)

TABLE 5-3 Rear-panel connections

Connection	On the UPS	Mates with	Rating	Conductor
Output receptacles	1K: 8 × NEMA 5-15R · 1.5K: 6 × NEMA 5-15R · 2K, 2.2K: 6 × NEMA 5-20R · 3K: 4 × NEMA 5-20R + 1 × NEMA L5-30R	Plugs of the loads	15 A per 5-15R, 20 A per 5-20R, 30 A for the L5-30R; total per model in Table 5-4	Cords of the loads
AC input	1K, 1.5K: IEC C14 inlet · 2K, 2.2K: IEC C20 inlet · 3K: attached cord	Power cord supplied (1.5K: NEMA 5-15P plug; 2K, 2.2K: NEMA 5-20P plug) · 3K: NEMA L5-30P plug into a NEMA L5-30R receptacle	Max. input current 12 / 17.5 / 24 / 26 / 36 A (1K / 1.5K / 2K / 2.2K / 3K)	Cord supplied or attached; branch circuit per Table 5-1
CIRCUIT PROTECTOR	Input over-current protector	—	Rating not stated: ask AEC	—
USB	Type B	USB cable to the computer	—	—
EPO	2-terminal connector	Normally open emergency switch (Section 2.8)	—	Wire size and screw torque: ask AEC
DC INPUT	Battery port	Battery connector supplied, shipped unplugged (Section 5.9)	Internal battery: 24 / 48 / 48 / 72 / 72 V DC	Connects the internal LiFePO4 battery (Section 2.3)
INTELLIGENT SLOT	Slot for one card	SNMP card: RJ45 network cable · RS-485 and dry-contact card: 8-pin terminal block (Table 2-5)	Dry contacts: below 60 V DC or 42 V AC RMS, below 1.25 A	Terminal-block wire size: ask AEC

5.9 Connecting the battery

For shipping, the battery connector is left unplugged so that the UPS cannot be switched on by accident. All ratings connect the same way; the picture shows the LUMINA 1K.

1. Take the battery connector out of the packaging.
2. Plug it into the battery port marked DC INPUT on the rear panel (Figure 5-16; item 6 in Figure 2-7 and Figure 2-8, item 7 in Figure 2-9). Push it fully home.

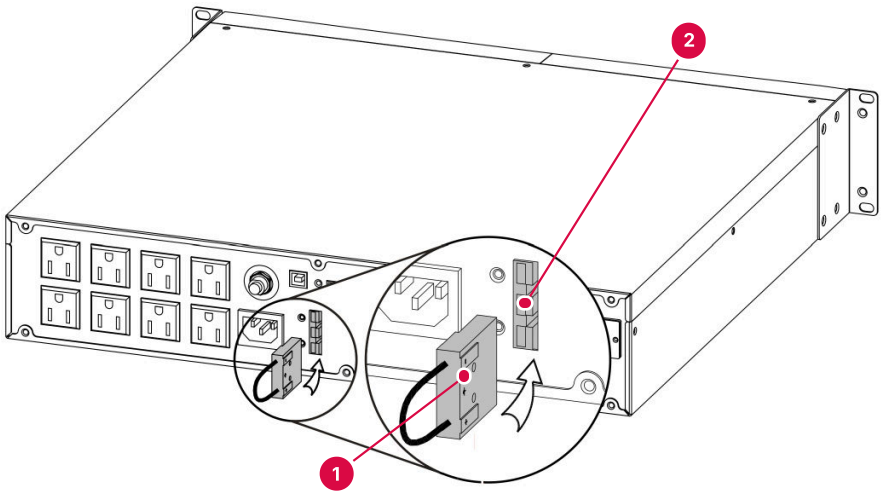

1. Battery connector
2. Battery port DC INPUT

FIGURE 5-16 Plugging in the battery connector

> ⚠ ***WARNING***
>
> Never touch the contacts of the battery port or of the connector. Plug in the connector only with the UPS switched off and unplugged.

5.10 Connecting the input and the loads

The AC input and the outputs of LUMINA are plug-in connections: plug the UPS into the utility receptacle, and plug the loads into the output receptacles. The 1K, 1.5K, 2K and 2.2K use the power cord supplied; the 3K has an attached cord with a NEMA L5-30P twist-lock plug.

> ⚠ ***CAUTION***
>
> The utility receptacle must be installed near the UPS and be easily accessible: unplugging the UPS is the way to disconnect it from the utility.

1. Check that the branch circuit and receptacle match Table 5-1.
2. 1K, 1.5K, 2K and 2.2K: plug the power cord into the AC INPUT inlet of the UPS. Do not plug it into the utility receptacle yet — that is the first step of Section 6.2.
3. Switch the loads off, then plug them into the output receptacles. All receptacles share the UPS output: keep each receptacle, and the total of all of them, within the limits for your model (Table 5-4).

4 Optional: connect the USB cable to the computer that runs the power-management software, the EPO switch (Section 2.8) and the network or dry-contact cable (Section 5.7).



1. Loads: output receptacles, 8 × NEMA 5-15R
2. AC INPUT: power cord to the utility receptacle
3. CIRCUIT PROTECTOR
4. USB: cable to the computer
5. EPO: emergency switch (optional)
6. DC INPUT: battery connector, plugged in
7. Cooling fan — keep clear
8. INTELLIGENT SLOT with SNMP card: network cable

FIGURE 5-17 Connections — LUMINA 1K (SNMP card fitted, battery connector plugged in)

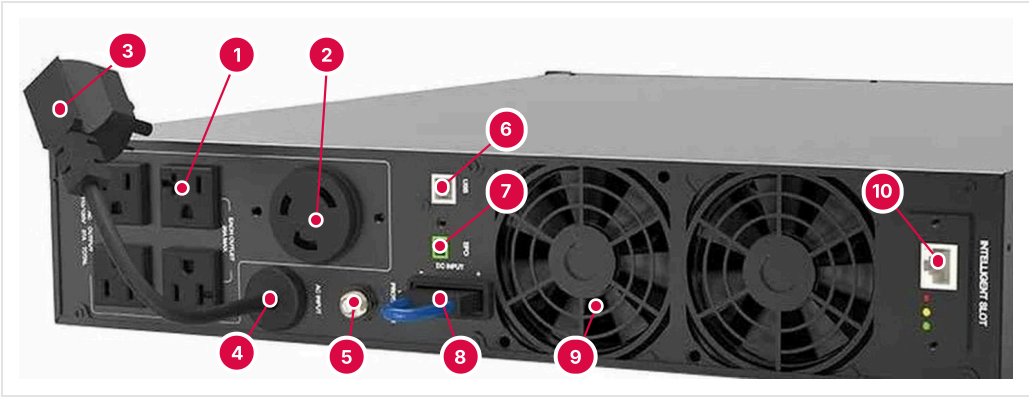

1. Loads: output receptacles, 4 × NEMA 5-20R
2. Load: output receptacle, NEMA L5-30R
3. Input cord with NEMA L5-30P plug: to the utility receptacle
4. AC INPUT cord entry
5. CIRCUIT PROTECTOR
6. USB: cable to the computer
7. EPO: emergency switch (optional)
8. DC INPUT: battery connector, plugged in
9. Cooling fans — keep clear
10. INTELLIGENT SLOT with SNMP card: network cable

FIGURE 5-18 Connections — LUMINA 3K (SNMP card fitted, battery connector plugged in)

TABLE 5-4 Output receptacle limits

Model	Output receptacles	Max. current per receptacle	Max. total output current	Rear panel
LUMINA 1K	8 × NEMA 5-15R	15 A	9 A	Figure 2-7, Figure 5-17

Model	Output receptacles	Max. current per receptacle	Max. total output current	Rear panel
LUMINA 1.5K	6 × NEMA 5-15R	15 A	13.7 A	Section 2.7 (2K panel, 5-15R receptacles)
LUMINA 2K	6 × NEMA 5-20R	20 A	18 A	Figure 2-8
LUMINA 2.2K	6 × NEMA 5-20R	20 A	20 A	Figure 2-8
LUMINA 3K	4 × NEMA 5-20R + 1 × NEMA L5-30R	20 A (L5-30R: 30 A)	27 A	Figure 2-9, Figure 5-18

5.11 Checking the installation

When the connections are complete, check them against Table 5-5.

TABLE 5-5 Installation checklist

No.	Check	Yes	No
1	The branch circuit, breaker and receptacle match Table 5-1.	☐	☐
2	The battery connector is plugged into DC INPUT.	☐	☐
3	All cables and plugs are connected securely.	☐	☐
4	The neutral-to-ground voltage is below 5 V AC.	☐	☐
5	The output load is within the limits of Table 5-4; no inductive loads.	☐	☐
6	Cables are routed neatly and tied according to good workmanship practice, leaving room for future changes, expansion and maintenance.	☐	☐

CHAPTER 6

06 Operation

Checks before the first start, starting and stopping the UPS, the battery test, silencing the alarm and the operating modes.

6.1 Before starting

Before using the UPS, check that:

- the input and output are connected correctly;
- the input is connected to a supply matching the rated input;
- the output has no short circuit and the load does not exceed the UPS rating;
- the computers and other loads are switched off;
- the battery connector is plugged in (Section 5.9).

NOTICE

Do not connect inductive loads to the UPS output. Feed them directly from the utility supply.

6.2 Starting the UPS

1. Plug the UPS into the utility receptacle.
2. Press and hold ON for 1 s (Figure 2-5, item 2). The UPS starts and the LCD lights.
3. Wait about 10 s. When the UPS is running steadily — utility-mode symbol lit (Figure 2-6, item 2), no FAULT — switch on the loads.
4. Check the load: press SELECT until % lights (Section 3.1).

⚠ CAUTION

Switch on the largest loads first and the smallest last, so that starting a large load does not trigger the overload protection.

i NOTE **First start.** The battery may not be fully charged after shipping and storage. Leave the UPS on utility power for at least 5 hours — the recharge time in Table A-1 — before relying on the full runtime. You can use the UPS meanwhile.

6.3 Shutting down the UPS

1. Switch off the loads and let the UPS run with no load for about 10 minutes to cool down.
2. Press and hold OFF for 1 s (Figure 2-5, item 3). The UPS shuts down.
3. Unplug the UPS from the utility receptacle.

6.4 Battery test and buzzer

- **Battery test:** in utility mode, press and hold ON for 3 s. The battery-mode symbol lights (Figure 2-6, item 4) while the UPS runs briefly on the battery, then the utility-mode symbol returns. If the UPS cannot carry the load on battery, see Section 7.5.

- **Silence the buzzer:** in battery mode, press and hold ON for 3 s; the buzzer-silenced symbol lights (Figure 2-6, item 6). Press and hold ON for 3 s again to turn the buzzer back on.

6.5 Operating modes

TABLE 6-1 Operating modes and what the LCD shows

Mode	When	LCD (Figure 2-6)
Utility (online)	Utility power is within range: the inverter feeds the load and the charger charges the battery.	Utility-mode symbol (item 2)
Battery	Utility power has failed or is out of range: the battery feeds the inverter with no break. The buzzer beeps.	Battery-mode symbol (item 4), battery level bars (item 13)
Bypass	The load is too high, an inverter fault occurred, or a load inrush moved the load for a moment: the utility feeds the load directly, without protection.	Bypass symbol (item 3)
ECO	Selected in the settings (Section 3.2.1): the load runs on the bypass while the utility is good.	ECO (item 5)

CHAPTER 7

07 Maintenance and troubleshooting

Keeping the UPS and its lithium battery in top condition — what to check and when, the service life of the parts that wear — and finding the cause of a problem.

✓ TIP **AEC technical support — 24/7.** WhatsApp and phone +1 786 553 2100, always available · e-mail service.us@aecups.com. Send the model, the serial number and a photo of the display and of the alarm: it is the fastest way to a solution.

Correct maintenance keeps the UPS working at its best and extends its service life.

7.1 Safety during maintenance

- Hazardous voltage can be present inside the UPS even when it is not running. Before servicing, check with a meter that the UPS is completely shut down and safe.
- Operators must be familiar with the UPS and this manual.
- Remove rings, watches and other conductive objects before working on the UPS.
- Follow the safety regulations strictly. If in doubt, ask a qualified professional.

7.2 Preventive maintenance

To keep the UPS efficient and reliable, carry out the tasks in Table 7-1.

TABLE 7-1 Maintenance schedule

Interval	Task
Weekly	Look at the display: utility (online) mode, no FAULT, load within the rating.
Monthly	Check that the vents are clear and the fans run; check that the room temperature is within 32–104 °F (0–40 °C); keep the room free of dust and chemical pollutants.
Every 6 months	Run a battery test (Section 6.4); check the battery voltage reading (Section 3.1) and that the battery level bars fill after a utility failure.
Yearly	AEC service: inspection of the connections (tightness, signs of heating), fans, capacitors and firmware.
After any alarm	Note the code and the buzzer signal, look them up in Table 7-4, and call AEC support if the alarm persists.

TABLE 7-2 Typical service life at 77 °F (25 °C)

Component	Typical life	Action
Cooling fans	5–7 years	Replace at the end of the period, or at once if a fan has stopped (FAN alarm).
DC bus electrolytic capacitors	7–10 years	Replaced by AEC service.
AC filter capacitors	5–7 years	Replaced by AEC service.

Component	Typical life	Action
Lithium (LiFePO4) battery	12–15 years design life (3,000 cycles)	Monitored by the BMS; replaced by AEC service when the capacity has dropped.

Life is shorter at higher temperature, in dusty rooms and under continuous heavy load. The figures are typical of the industry for online UPS; AEC service plans replacement during preventive maintenance.

7.3 Battery care

The LiFePO4 battery is charged and protected by the UPS and its BMS. It needs no topping up or cleaning.

- **Keep it charged.** The UPS recharges the battery whenever it runs on utility power. Recharge time: 5 hours or less (Table A-1).
- **Do not leave it empty.** After a long utility failure the UPS shuts down at the end of discharge and restarts when utility power returns. If utility power stays off, press OFF to shut the UPS down rather than letting the battery discharge for a long time, and recharge it within 24 hours once utility power is back.
- **Temperature.** The battery lasts longest at about 68 °F (20 °C). Avoid running the UPS above 104 °F (40 °C) for long periods.
- **Out of service.** If the UPS is not used for a long time, recharge the battery every 3 months: plug in the UPS and leave it on utility power for at least 5 hours (Section 9.3).
- **Check it.** Run a battery test every 6 months (Section 6.4).

7.4 Replacing the battery

⚠ *WARNING*

- Battery replacement must be done by AEC service. Contact AEC.
- The replacement battery must be the AEC battery for your LUMINA model.
- Do not open, crush or burn the battery: it can catch fire or explode.
- Before touching the battery, check for hazardous voltage between the battery terminals and ground. Never touch both battery contacts or two bare terminals at the same time.

Recycle the used lithium battery according to federal, state and local regulations. Do not put it in household waste.

7.5 Troubleshooting

If the UPS does not work normally, look for the cause in Table 7-3. Check also whether the problem comes from the environment — temperature or humidity out of range — or from an overload. The table covers simple cases only; if the cause is not clear or the problem persists, contact your AEC dealer or AEC service.

TABLE 7-3 Troubleshooting

No.	Symptom	Possible cause and remedy
1	Utility power is normal and the UPS starts with 110/120 V output, but it runs on battery and the buzzer beeps intermittently.	Poor contact in the supply circuit or receptacle: the input is not reaching the UPS. Check the plug, the receptacle and the CIRCUIT PROTECTOR.
2	The UPS starts with 110/120 V output, but runs in bypass (the bypass symbol stays on).	(1) The load exceeds the UPS rating: reduce the load or use a larger UPS. (2) Normal if a load inrush moved the UPS to bypass for a moment: it returns to normal by itself.
3	The output is normal after start-up, but stops as soon as a load is switched on.	(1) Severe overload or output short circuit: reduce the load or find the short circuit — often a faulty power strip or a damaged load. (2) Loads were switched on smallest first: restart the UPS and, when it is steady, switch on the loads largest first.

No.	Symptom	Possible cause and remedy
4	The UPS runs normally, then turns off by itself after a while.	Normal in battery mode: the battery is exhausted and the low-battery protection has shut the UPS down. When utility power returns, the UPS restarts automatically and recharges the battery.
5	Long beep, fault symbol on, inverter fault, UPS transfers to bypass.	(1) Overload or output short circuit — the UPS turns off. (2) Driver or power-transistor failure. (3) Main control board failure. (4) UPS over-temperature protection. For (2) and (3), contact AEC service.
6	The UPS runs normally, but there is no output when utility power fails.	(1) Battery connector not plugged into DC INPUT (Section 5.9). (2) Battery fault. (3) Charger fault: the battery is not charging. Contact AEC service for (2) and (3).
7	The input is normal, but the buzzer beeps intermittently.	The utility voltage or frequency is outside the UPS input range (Table A-1). Check the input readings (Section 3.1).
8	All indicators on the panel are off.	Faulty display-board connection or display board. Contact AEC service.

When the UPS reports a fault, press SELECT to page through the readings to the fault information (FAULT lit) and find the cause quickly. The fault codes and buzzer signals are explained in Table 7-4.

TABLE 7-4 Fault codes and buzzer signals

Code or sign	Buzzer	Meaning and action
EPO (Figure 3-5)	Long beep	Emergency power off active: both the bypass and inverter outputs are off. Open the EPO circuit, turn the UPS off and on again (Section 2.8).
BUS (Figure 3-6)	Long beep	DC bus voltage fault: the inverter output is off. Contact AEC service.
TMP (Figure 3-7)	Long beep	Over-temperature protection: the inverter output is off. Check the cooling fans and make sure the vents are clear.
OUT (Figure 3-9)	Long beep	Output fault: check the output for a short circuit or an excessive load.
MIF (Figure 3-10)	Long beep	With the UPS on and in bypass: more than five inverter faults within five minutes. Check for inductive loads on the output, or an excessive load.
BAT (Figure 3-11)	Long beep	Battery fault: battery voltage too low or too high. Check that the battery connector is plugged in; if it is, contact AEC service.
FAN (Figure 3-8)	Rapid beep (about every 0.2 s)	Fan fault: the inverter output is about to shut down. Check the cooling fan.
All load bars flash	Rapid beep (about every 0.2 s)	Output overload: the output is about to shut down. Reduce the load.
All battery bars flash	Slow beep (about every 2 s)	Battery voltage too high: contact AEC service to check the battery and the charger.
Battery bars off, frame flashes	Rapid beep (about every 0.2 s)	Battery nearly exhausted: protect your equipment and save your work.

CHAPTER 8

08 Network monitoring

The AEC SNMP-L card in the intelligent slot, its web page and the AEC monitoring and shutdown software.

8.1 The SNMP-L card

The AEC SNMP-L card puts LUMINA on your network: its own web page in any browser, SNMP V1/V2c/V3 with the standard RFC 1628 UPS MIB, and e-mail alarms. It fits the INTELLIGENT SLOT at the right of the rear panel (Section 2.7); on -NC models the card is already fitted.

1. Fit the card (Section 5.7) and connect its NETWORK port to your network with an RJ45 cable (Figure 2-10).
2. On a Windows PC in the same network, install the AEC card search program from the AEC app (**Support › Downloads › SNMP › SNMP-L**) and press **Search**: the card appears at its factory address 192.168.0.100.
3. Select the card › **Network** › **Use Following Static IP**: give it a free address of your network, its netmask and gateway (ask your IT department). The card does not work at the factory address.
4. Open the card's web page and log in with the user name **admin** and the password given by AEC technical service. Change the password at the first login.
5. **Setting › Serial port setting**: baud rate 2400 on COM1 and COM2. **Management › Device management › UPS › Edit**: select the single-phase UPS protocol (WRWF-1101-15338-01_1P) and enter the UPS data from its rating label.
6. **Home** shows the UPS values: the card reads the UPS. Then set the e-mail alarms (**Management › Alarm management**).

8.2 AEC monitoring software

TABLE 8-1 AEC monitoring programs (license-free)

AEC program	File in the download folder	What it does
Card search and network set-up	WiseFind_Setup.exe	Finds AEC SNMP cards on the network and sets their IP address (steps 2–3 above).
Multi-UPS monitoring	WiseInsight_Setup.exe	Watches one or many UPS (up to 1,000) from a Windows PC: live data, events, e-mail and audible alerts, a site map.
Safe shutdown	WiseClose_Setup.exe	Runs on a PC or server fed by the UPS and shuts it down safely before the battery runs out. With a lithium UPS, use the utility-fail and UPS-fail timers, not the battery-low time.

✓ TIP Step-by-step instructions for every web page, SNMP and the programs: AEC SNMP-L Network Card User Manual, in the AEC app (**Support › Downloads › SNMP › SNMP-L**).

CHAPTER 9

09 Packaging, transport and storage

How LUMINA is packed, and how to move and store it — and its lithium battery — safely.

9.1 Packaging

LUMINA is packed in a carton. Keep the carton in the orientation it shows. One side of the carton carries handling symbols (keep dry, fragile, this way up, stacking limit, etc.); the other side carries the model label.

9.2 Transport

- Handle the UPS with care and avoid hard impacts. Always keep the carton in the orientation printed on it.
- LUMINA contains a lithium-ion battery. Shipping it is regulated as dangerous goods (lithium-ion batteries contained in equipment, UN 3481). Ship it only in its original packaging with its labels, and ask AEC for the shipping documents before returning a unit.
- Unplug the battery connector before transport.

9.3 Storage

- Store the UPS in a dry warehouse, away from sunlight and rain, in the orientation printed on the carton.
- Storage temperature: 32–104 °F (0–40 °C) with the battery inside, relative humidity 20–80 %. The UPS alone, without battery, withstands −13 to +131 °F (−25 to +55 °C).
- The warehouse must be free of toxic gases, flammable or explosive materials and corrosive chemicals, strong vibration, impact and strong magnetic fields.
- Under these conditions the UPS can be stored for six months. For longer storage, recharge the battery every three months: plug in the UPS and leave it on utility power for at least 5 hours.

APPENDIX A

A Technical specifications

The ratings common to all LUMINA models, then the values that differ by model.

TABLE A-1 Specifications common to all LUMINA models

Item	Value
Input	
Voltage range	88–148 V AC with load above 75 %; 77–88 V with 50–75 % load; 60–77 V with load below 50 %
Frequency range	50 / 60 Hz ±10 % (auto-sensing)
Input wiring	Single phase, three wire (L, N, G)
Output	
Voltage	110 / 120 V AC ±1 % (selectable)
Frequency	50 / 60 Hz ±0.2 % (battery mode)
Waveform	Pure sine wave
Voltage distortion	THD < 3 % (linear load)
Power factor	0.9
Transfer time, utility ↔ battery	0 ms
Overload	100–130 % for 1 min; 130–150 % for 1 s; above 150 % for 200 ms (values per model in Table A-2)
Battery	
Type	Lithium iron phosphate (LiFePO4), internal, with BMS
Recharge time	≤ 5 h
Design life	12–15 years (3,000 cycles)
General	
Communication	Standard: USB port and EPO connector. Optional, in the intelligent slot: SNMP card, or RS-485 and dry-contact card
Display	LCD showing the operating status, rack or tower orientation
Alarms	Low battery, utility failure, UPS fault, output overload
Protection	Battery undervoltage, overload, short circuit, over-temperature, input overvoltage
Noise	< 55 dB
Operating temperature	32–104 °F (0–40 °C) at full output; up to 140 °F (60 °C) with reduced output
Relative humidity	0–95 %, non-condensing
Altitude	Up to 6,560 ft (2,000 m) at full output; reduce the output above
Degree of protection	IP20

Item	Value
Form factor	2U, 19-inch rack or tower (stands supplied)
Safety listing	cETLus listed (Intertek): UL 1778 and CSA C22.2 No. 107.3; battery tested to UN 38.3
Warranty	5 years on the whole unit, UPS and lithium battery

TABLE A-2 Specifications by model

	LUMINA 1K	LUMINA 1.5K	LUMINA 2K	LUMINA 2.2K	LUMINA 3K
Rating (VA / W)	1,000 / 900	1,500 / 1,350	2,000 / 1,800	2,200 / 1,980	3,000 / 2,700
Max. input current	12 A	17.5 A	24 A	26 A	36 A
Input connection	IEC C14 inlet, cord supplied	IEC C14 inlet, cord with NEMA 5-15P plug supplied	IEC C20 inlet, cord with NEMA 5-20P plug supplied	IEC C20 inlet, cord with NEMA 5-20P plug supplied	Attached cord, NEMA L5-30P
Branch circuit	Table 5-1	Table 5-1	Table 5-1	Table 5-1	Table 5-1
Max. total output current	9 A	13.7 A	18 A	20 A	27 A
Output receptacles	8 × NEMA 5-15R (15 A)	6 × NEMA 5-15R (15 A)	6 × NEMA 5-20R (20 A)	6 × NEMA 5-20R (20 A)	4 × NEMA 5-20R (20 A) + 1 × NEMA L5-30R (30 A)
Overload, 1 min	≤ 1,300 VA / 1,170 W	≤ 1,950 VA / 1,755 W	≤ 2,600 VA / 2,340 W	≤ 2,860 VA / 2,574 W	≤ 3,900 VA / 3,510 W
Overload, 1 s	≤ 1,500 VA / 1,350 W	≤ 2,250 VA / 2,025 W	≤ 3,000 VA / 2,700 W	≤ 3,300 VA / 2,970 W	≤ 4,500 VA / 4,050 W
Overload, 200 ms	> 1,500 VA / 1,350 W	> 2,250 VA / 2,025 W	> 3,000 VA / 2,700 W	> 3,300 VA / 2,970 W	> 4,500 VA / 4,050 W
Efficiency (AC–AC, up to)	91.7 %	92.5 %	92.5 %	92.6 %	92.5 %
Nominal battery voltage	24 V DC	48 V DC	48 V DC	72 V DC	72 V DC
Battery capacity	10.2 Ah · 244.8 Wh	10.2 Ah · 489.6 Wh	10.2 Ah · 489.6 Wh	13.6 Ah · 979.2 Wh	10.2 Ah · 734.4 Wh
Runtime at full load	11 min	11 min	11 min	23 min	11 min
Dimensions W × D × H, in	17.2 × 16.5 × 3.4	17.2 × 22.4 × 3.4	17.2 × 22.4 × 3.4	17.2 × 24.2 × 3.4	17.2 × 22.4 × 3.4
Dimensions W × D × H, mm	438 × 420 × 87	438 × 570 × 87	438 × 570 × 87	438 × 615 × 87	438 × 570 × 87
Net weight	19.6 lb (8.9 kg)	29.5 lb (13.4 kg)	30.0 lb (13.6 kg)	42.1 lb (19.1 kg)	37.7 lb (17.1 kg)

Specifications are subject to change without notice. Runtimes as published by AEC, with a new, fully charged battery; the 1.5K follows the 1K, 2K and 3K curve at its own load (Table B-1). Overload watts are at power factor 0.9; each overload band starts where the one above ends (1 min: from the rating; 1 s: from the 1 min limit).

APPENDIX B

B Runtime

Typical runtime on battery at 77 °F (25 °C), with a new, fully charged battery, by load as a percentage of the rated output power (W).

TABLE B-1 Runtime by load

Load	LUMINA 1K, 2K, 3K (min)	LUMINA 2.2K (min)
10 %	125 (2 h 05)	236 (3 h 56)
20 %	66 (1 h 06)	118 (1 h 58)
25 %	55	98 (1 h 38)
30 %	44	78 (1 h 18)
40 %	33	59
50 %	27	46
60 %	24	42
70 %	21	37
75 %	19	35
80 %	17	32
90 %	14	28
100 %	11	23

Published AEC runtime data. Actual runtime depends on load type, temperature and battery age.

LUMINA 1.5K. The 1.5K follows the same curve as the 1K, 2K and 3K: read the 1K, 2K, 3K column at the load as a percentage of the 1.5K rating (1,350 W). Full load: 11 min; half load: 27 min.

C

APPENDIX C

Acronyms and abbreviations

The terms and abbreviations used in this manual.

TABLE C-1 Acronyms and abbreviations

Term	Meaning
AC	Alternating current
AWG	American Wire Gauge
BMS	Battery management system
DC	Direct current
ECO	Economy (energy-saving) operating mode
EPO	Emergency power off
ESD	Electrostatic discharge
FCC	Federal Communications Commission
GFCI	Ground-fault circuit interrupter
IEC	International Electrotechnical Commission
IGBT	Insulated-gate bipolar transistor
INV	Inverter (online) operating mode
LCD	Liquid-crystal display
LiFePO4	Lithium iron phosphate (battery chemistry)
NC / NO	Normally closed / normally open (contacts); NC in an ordering code: network card fitted
NEC	National Electrical Code (NFPA 70)
NEMA	National Electrical Manufacturers Association (receptacle and plug types)
PFC	Power-factor correction
RCK / TWR	Rack / tower display orientation
RS-485	Serial communication standard (TIA-485)
SNMP	Simple Network Management Protocol
THD	Total harmonic distortion
UPS	Uninterruptible power supply
USB	Universal Serial Bus

D

APPENDIX D

Frequently asked questions

Short answers to the questions AEC support hears most.

TABLE D-1 Frequently asked questions

Question	Answer
Should the UPS stay switched on?	Yes. Leave it on all the time: it protects the load and keeps the battery charged.
Is the output a pure sine wave?	Yes: the UPS is online double conversion, on utility and on battery.
Why lithium?	LiFePO4 lasts much longer than lead-acid (12–15 years design life), recharges faster (≤ 5 h), weighs less and stands heat better; the BMS protects every cell.
What happens when the battery runs out?	The UPS switches its output off at the end of discharge, and restarts and recharges when the utility returns.
Which model runs from a 15 A receptacle?	The 1K and the 1.5K: their cords have a NEMA 5-15P plug for a NEMA 5-15R receptacle on a 15 A circuit. The 2K and 2.2K need a 20 A circuit (NEMA 5-20R), the 3K a 30 A twist-lock circuit (NEMA L5-30R) — Table 5-1.
Can I fit a larger breaker than the plug rating?	No. The breaker matches the plug and its receptacle (Table 5-1). If it trips at full load and low input voltage, call AEC; do not change the plug.
Can the UPS run from a generator?	Yes — see Section 4.3.
What is ECO mode?	The load runs on the bypass while the utility is good: higher efficiency, but no protection from disturbances. Use online (INV) mode for critical loads.
How do I monitor it on the network?	With the SNMP-L card — see Section 8.1.

E

APPENDIX E

Installation record

Fill this record in at installation and keep it with the UPS: it is the first thing AEC support asks for.

TABLE E-1 Installation record

Item	Value
Model and ordering code	
Serial number	
Installation date	
Installed / commissioned by	
Site, room and rack	
Branch circuit: breaker rating, receptacle type, conductor size	
Mounting: rack or tower (display RCK / TWR)	
Battery connector plugged in (date)	
Settings: output voltage (110 / 120 V), mode (INV / ECO)	
Option card and SNMP-L card IP address	
Load at start-up (W, %)	
Battery test result and date	

Service and support

AEC technical support is available 24 hours a day, 7 days a week. For help with installation, start-up, alarms, settings, spare parts, warranty claims and service visits, contact us by WhatsApp, phone or e-mail.

TECHNICAL SUPPORT · 24/7	**+1 786 553 2100**	WhatsApp and phone — always available
SERVICE E-MAIL	**service.us@aecups.com**	Technical questions, service requests, warranty claims
SALES	**sales@aecups.com**	
ADDRESS	**AEC UPS USA LLC**	4872 SW 72nd Ave, Miami, FL 33155
WEB	**aecups.com**	

When you contact us, have ready: the model and ordering code, the serial number (on the rating label), the alarm or event shown, the load and the battery set-up — a photo of the display and of the label speeds things up on WhatsApp.