AEC

MODULAR ONLINE UPS · INTERNAL BATTERIES · 208/120 V

RADIANT-IB 20–100 kVA

Quick Installation Guide

From delivery to normal mode, for the 100 kVA cabinet. The installer prepares the site, the cabinet and the wiring; an engineer approved by AEC commissions the UPS. Qualified electricians only. Read every safety message.

100 kVA cabinet · 5 slots | RADIB100-1X20 ... -5X20 | RADIB-PWR-20 module



AEC-QG-RADIB-US · REV. C · NOVEMBER 2026

i NOTE **Who does what.** The installer (a qualified electrician) does steps 1 to 6: site, placing, power modules, breakers and cables to the NEC, terminals, battery trays and control cables — with every breaker open and no power applied. **An engineer approved by AEC commissions the UPS** (steps 7 and 8): do not apply power before the AEC engineer is on site. Book the commissioning with AEC support when the wiring is finished.

1 Safety first

⚠ DANGER

Hazardous voltage. The utility inputs and the internal battery are lethal. The cabinet holds 240 VRLA blocks in 12 strings of 240 V DC nominal (±120 V to the neutral), more while charging; the battery bus stays live when the UPS is off. Before you move or reconnect any cable, open all input breakers and the battery breaker, wait at least 10 minutes and check with a multimeter that the terminals are below 36 V.

⚠ WARNING

- Only qualified electricians install and wire the UPS. Do not put the UPS into operation until an engineer approved by AEC has commissioned it: otherwise there is a risk to people, the equipment may malfunction and the warranty is void.
- Ground the UPS and size every conductor and breaker according to the National Electrical Code (NFPA 70) and local codes. Connect the protective earth (PE) first.
- Battery work: remove rings, watches and metal jewelry, wear rubber gloves and eye protection, and use tools with insulated handles. Reversed battery polarity can cause explosion and fire.
- Work on energized parts follows NFPA 70E: wear the PPE of the site's arc-flash assessment and field-mark the arc-flash warning label (NEC 110.16(A)).
- In case of fire, use a dry-chemical (powder) extinguisher only.

2 Check the delivery and the site

1. While the crate is still on the truck, inspect it for damage. If damage is apparent, notify the carrier and AEC at once.
2. Move the crate to the site with a forklift rated for the weight: up to about 2,200 lb (1,000 kg) with modules and batteries.
3. Open the top plate of the crate, then the side boards. Remove the protective foam around the cabinet.
4. Check the cabinet for transport damage, the product label (model, cabinet and capacity) and the contents: the 100 kVA cabinet with the bypass & monitoring module, the touchscreen and the breakers, on four leveling feet (no casters: moved with a pallet truck or forklift); the power modules ordered and the 24 battery trays (fitted, or packed separately); the user manual.

5 Remove the bolts that hold the cabinet to the pallet.

TABLE 2-1 Site

Item	Requirement
Location	Indoors; dry, clean and ventilated; away from water, heat sources, flammable or corrosive substances, conductive dust, salt air and direct sunlight
Temperature · humidity	32–104 °F (0–40 °C), 68–77 °F (20–25 °C) for maximum battery life · 0–95 % RH, non-condensing
Altitude	Full power up to 3,300 ft (1,000 m); up to 6,600 ft (2,000 m) derate 1 % per 330 ft (100 m)
Floor	Level (less than 5° slope), no vibration; up to 2,174 lb (986 kg) on four leveling feet: 337 lb/ft² (1,643 kg/m²) over the footprint, about 544 lb (247 kg) per foot (calculated)
Heat	Up to 21,780 BTU/h (6.38 kW) at 100 kW, calculated at 94 % efficiency: size the cooling with margin
Ventilation	Fresh air according to NFPA 70 Article 480 and IEEE 1635: the VRLA batteries give off hydrogen at the end of charging

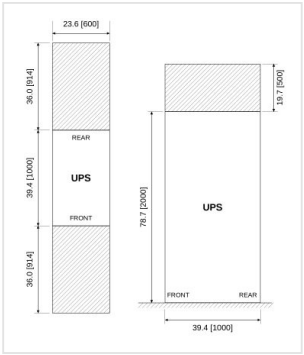

FIGURE 2-1 Space to keep free: plan view (front at the bottom) and side view — hatched: keep free; inches [mm]

- **Front:** working space at least 36 in (914 mm) deep, 30 in (762 mm) wide or the width of the equipment, and 6.5 ft (1.98 m) high (NEC 110.26(A)). It also covers the AEC minimum of 31.5 in (800 mm) to open the door and replace modules.
- **Rear:** working space at least 36 in (914 mm) deep, 30 in (762 mm) wide and 6.5 ft (1.98 m) high (NEC 110.26(A)): the breakers and the power terminals are at the rear. It also covers the AEC minimum of 19.7 in (500 mm) for ventilation.
- **Top:** at least 19.7 in (500 mm). **Sides:** no distance is stated; ask AEC if the cabinet stands against a wall or another cabinet.

3 Place the cabinet and fit the power modules

⚠ *WARNING*

The cabinet is heavy and tall: 430 lb (195 kg) empty, plus 44 lb (20 kg) per module and 63.5 lb (28.8 kg) per battery tray. It has no casters and can tip over while it is moved: move it with a pallet truck or forklift rated for the weight, slowly, on a flat floor, and keep people away from its sides. Fit the power modules and battery trays only after the cabinet is in its final place. On a weak floor, spread the load with steel plates or larger supports under the leveling feet. The leveling feet do not fix the cabinet to the floor: in a seismic zone, ask AEC before installation.

1 Turn the four leveling feet (spacing 21.1 × 29.5 in / 535 × 750 mm) counterclockwise with a wrench to raise them, so the pallet truck can set the cabinet down without catching them.

2 Set the cabinet down in its final place, over the floor opening for the cables.

3 Turn the leveling feet clockwise until the cabinet rests on them. Check that the four feet are at the same height and that the cabinet is level and does not move.

4 Remove the slot covers for the number of modules ordered.

5. Insert the modules from the bottom slot upward (No. 1 at the bottom, Figure 3-2, item 2), with any number of modules.
6. Push each module fully in and fasten it with the screws on both sides of its front panel. Leave the empty slots closed with their covers.



1. Touchscreen and EPO button

FIGURE 3-1 Front, door closed

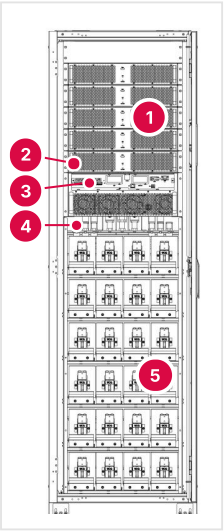

1. Power modules, 20 kVA: up to 5
2. Slot No. 1, at the bottom: fit modules from the bottom up
3. Bypass & monitoring module: communication panel
4. Battery bus connectors
5. Battery trays: 6 rows of 4, 24 trays

FIGURE 3-2 The 100 kVA cabinet, door open

4 Wire the power

The breakers and the power terminals are at the rear, behind the two rear doors (Figure 4-1). Install the external breakers in the distribution panel.

- The UPS is a continuous load: every overcurrent device is at least **125 % of the continuous current** (NEC 210.20(A), 215.3), rounded up to the next standard rating (NEC 240.6(A)).
- **Single feed (as delivered):** the copper link joins the main input and the bypass input, and the external main input breaker protects both. Connect nothing to bA, bB, bC, bN and never connect a second breaker to the linked terminals. **Separate bypass feed:** remove the link; each input has its own breaker, fed from sources with the same neutral.
- Use 3-pole breakers; the neutral is not switched. Breakers with ground-fault (RCD) protection are not recommended on the UPS feeds.
- Size the breakers and cables for the full rating of the cabinet, so that modules can be added later without rewiring.

TABLE 4-1 Currents and breakers — 100 kVA cabinet, 208 V

Item	100 kVA cabinet
Main input current (maximum)	348 A
Bypass input and output current (rated)	277 A
Neutral current rating, bypass and output	471 A (1.7 × 277 A)
External main input breaker	450 A, 3-pole
External bypass input breaker (separate bypass feed only)	350 A, 3-pole
External output breaker	350 A, 3-pole
External maintenance bypass breaker (for full isolation)	350 A, 3-pole

TABLE 4-2 Minimum copper conductors — 100 kVA cabinet, 75 °C, NEC Table 310.16

Circuit (breaker)	Phases	Neutral	EGC, in each raceway
Main input (450 A)	2 × 4/0 AWG [2 × 107 mm²]	2 × 250 kcmil [2 × 127 mm²]	2 AWG [33.6 mm²]
Bypass input and output (350 A)	2 × 2/0 AWG [2 × 67.4 mm²]	2 × 250 kcmil [2 × 127 mm²]	3 AWG [26.7 mm²]

- Copper, 75 °C (NEC 110.14(C)), 86 °F (30 °C), two sets in two raceways, three current-carrying conductors each (NEC 310.15). Each pair carries at least its breaker rating. Parallel sets 1/0 AWG or larger, equal (NEC 310.10(G)); a full-size EGC in each raceway (NEC 250.122(F)). Voltage drop below 3 %. Final sizing: the engineer of record.
- Neutral rated 1.7 × 277 A; with the link fitted the main input neutral carries it too. Mainly non-linear load: the neutral counts as current-carrying (NEC 310.15(E)(3), 80 %): 2 × 250 kcmil main input, 2 × 3/0 AWG bypass and output, 2 × 300 kcmil neutral (calculated).
- All terminals are M10 bolts, two per pole: torque **133 lb-in (15 N·m)**. Use crimped ring lugs; the largest lug the terminals accept: ask AEC.

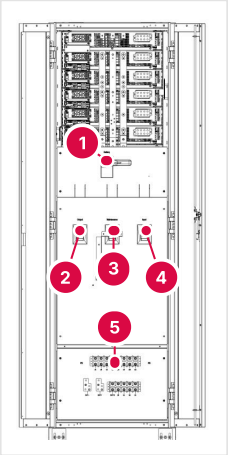

1. Battery breaker
2. Output breaker
3. Maintenance bypass breaker
4. Main input breaker
5. Power terminals, behind the cover

FIGURE 4-1 Rear doors open — the 100 kVA cabinet



1. Breakers
2. Terminal cover

FIGURE 4-2 Illustration — rear doors open

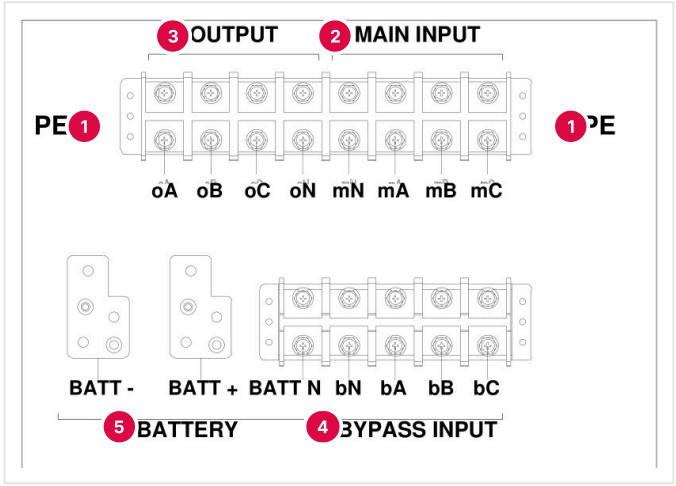

1. **PE** — protective earth, two places: connect first
2. **Main input** — mN, mA, mB, mC
3. **Output** — oA, oB, oC, oN
4. **Bypass input** — bN, bA, bB, bC (separate bypass feed only)
5. **Battery** — BATT –, BATT +, BATT N: factory-wired to the internal battery, connect nothing

FIGURE 4-3 Power terminals, cover removed — numbers in wire order

TABLE 4-3 Wire order

Terminal group	Marking, left to right	Notes
Main input	mN · mA (L1) · mB (L2) · mC (L3)	Clockwise phase rotation A-B-C.
Output	oA (L1) · oB (L2) · oC (L3) · oN	208 V line to line, 120 V line to neutral.
Bypass input	bN · bA (L1) · bB (L2) · bC (L3)	Same phase rotation and neutral as the main input (else alarm Bypass Sequence Error). Copper link to the main input as delivered.
Battery	BATT – · BATT + · BATT N	Factory-wired to the internal battery: connect nothing (external battery cabinet only if AEC supplies one).
PE	PE (two places)	First on and last off.

1. Check that every external breaker is open, and that all four breakers in the cabinet — **Battery**, **Output**, **Maintenance** and **Input** — are open (Figure 7-1, state A). Lock them out and hang warning signs on them.
2. Open the rear doors and remove the cover over the terminals (Figure 4-1, item 5; Figure 4-2, item 2). Bring the cables in from the bottom only (the roof has no cable entry); close any remaining opening against rodents.

3. Connect the protective earth (PE) conductors first (Figure 4-3, item 1).
4. Connect the main input cables to mA, mB, mC, mN (item 2) and the load cables to oA, oB, oC, oN (item 3).
5. Separate bypass feed only: remove the copper link between the main input and the bypass input, then connect the bypass cables to bA, bB, bC, bN (item 4).
6. Tighten every lug to 133 lb-in (15 N·m). Check the phase rotation and the wiring, then refit all covers.

5 Fit and connect the battery trays

The battery is inside: 240 VRLA blocks of 12 V, 9 Ah, in 24 trays of ten. Two trays form one string of 20 blocks with the neutral at the midpoint; the 12 strings are in parallel on the battery bus. The battery breaker is at the rear (Figure 4-1, item 1).



1. Trays in place: six rows of four
2. A tray drawn out: ten 12 V blocks
3. Tray front with the tray connector (50 A)

FIGURE 5-1 Battery trays behind the front door, some drawn out

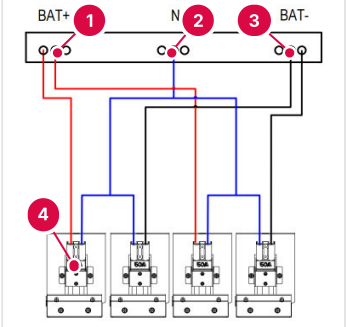

1. BAT+ busbar
2. N busbar (center tap)
3. BAT– busbar
4. Tray connector, 50 A

FIGURE 5-2 Battery bus: each group of four trays (two strings) connects to BAT+, N and BAT– — red +, blue N, black –

1. Check that the **Battery** breaker at the rear is open.
2. Slide the 24 battery trays into their places, from the bottom row up (Figure 5-1).
3. Plug each tray into the battery bus with its 50 A Anderson-type connector (Figure 5-1, item 3). The trays are wired in groups of four (two strings) to BAT+, N and BAT– (Figure 5-2).
4. Measure each string and check the polarity: about 240 V DC from BAT+ to BAT–, about 120 V DC from each to N. Reversed polarity can cause explosion and fire.
5. Leave the **Battery** breaker **open**: only the AEC engineer closes it.

6 Connect the control cables

The communication panel is on the front of the bypass & monitoring module (Figure 3-2, item 3). Use shielded, double-insulated signal cable, 20–16 AWG (0.5–1.5 mm²), at most 80–160 ft (25–50 m), apart from the power cables.

TABLE 6-1 Control connections

Connection	How to wire it
Remote EPO	In normal operation EPO-3 and EPO-4 are linked and EPO-1/EPO-2 open. Opening EPO-3/EPO-4, or closing EPO-1/EPO-2, triggers the EPO. Use a voltage-free normally-open or normally-closed contact.
Generator	Normally-open auxiliary contact of the generator between IP3-5 (GEN CONNECTED) and IP3-6 (+24 V).
Temperature sensors	TEMP-1 ambient, TEMP-4 battery, TEMP-2 · TEMP-3 common. Optional sensors, specific to the UPS: order them from AEC.

Connection	How to wire it
Battery breaker (BCB)	IP1 and IP2 read normally-open auxiliary contacts of a battery breaker; OP4-4 BCB DRV (+24 V, max. 100 mA) drives its trip coil at end of discharge or on EPO. Ask AEC whether the internal battery breaker is wired to them at the factory before you connect anything here.
Alarm relays	OP1 battery low, OP2 general alarm, OP3 utility failure: NC · NO · common.

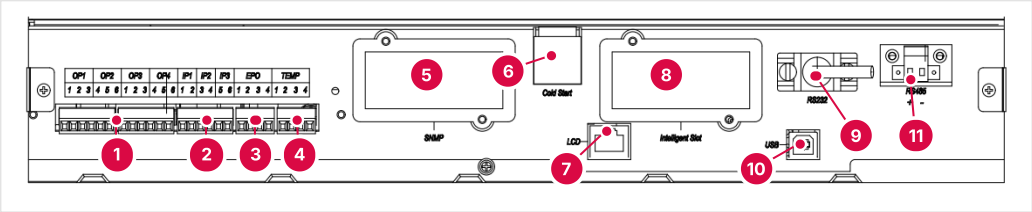

1. OP1 · OP2 · OP3 · OP4: alarm relays and battery breaker trip
2. IP1 · IP2 · IP3: BCB status, BCB online, generator input
3. EPO: remote emergency power off input
4. TEMP: ambient and battery temperature sensors
5. SNMP slot: SNMP-M network card
6. Red cold-start button (start on battery)
7. LCD: cable to the touchscreen (RJ45) — not a network port
8. Intelligent slot: dry-contact expansion card
9. RS-232 port (DB9)
10. USB port
11. RS-485 port (terminal, + −)

FIGURE 6-1 Communication panel on the front of the bypass & monitoring module

Parallel cabinets (up to three) need parallel cables, an external maintenance bypass and settings: follow the user manual, section "Parallel system".

7 Start the UPS — with the AEC engineer

NOTICE

The AEC commissioning engineer performs steps 7 and 8, or directs them on site. Before the engineer arrives, check: cabinet level on its four leveling feet, front and rear working space free; modules fitted from the bottom up; all 24 trays plugged in, string voltages checked and the battery breaker open; breakers and conductors as in Table 4-1 and Table 4-2, PE first, 133 lb-in; phase rotation of both inputs; EPO, sensors and cards connected.

⚠ WARNING

The output terminals become live. If loads are connected, check with their users that it is safe to apply power; otherwise isolate them from the UPS output.

1. Check that all breakers are open (Figure 7-1, state A).
2. Close the external main input breaker, and the external bypass input breaker if the bypass has a separate feed.
3. Open the rear doors. Close the **Output** breaker, then the **Input** breaker, one by one (Figure 7-1, state B). You see: the touchscreen lights and shows the home page (Figure 8-1); the power modules' indicators turn green.
4. Wait about 30 s: the rectifiers start, the static bypass feeds the load and the inverters start.
5. Wait: after about 90 s the UPS transfers from bypass to inverter. You see: on the home page the energy flow runs from the utility through rectifier and inverter to the output (Figure 8-1, item 2).
6. Close the **Battery** breaker (Figure 7-1, state C). The UPS starts charging the batteries. You see: **Cabinet › Battery** shows the battery connected and charging (Figure 8-2).
7. Close the external output breaker, then the branch breakers of the loads one by one.

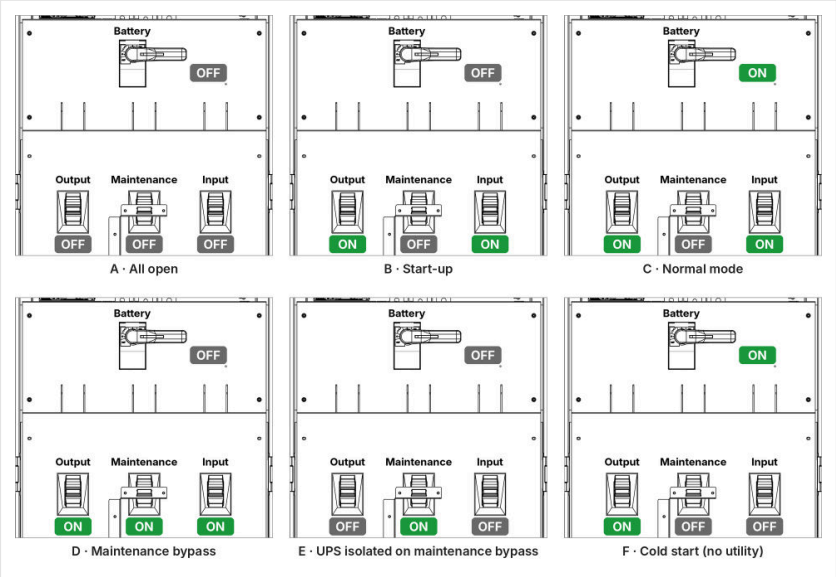

FIGURE 7-1 Breaker states A to F at the rear — green ON, gray OFF. External breakers: see the text.

8 Set and check

Settings are protected by login. The AEC engineer makes the battery settings from the battery maker's values.

1. **Set › BATT Set**: Battery Number **20** blocks per string (internal trays); Battery Capacity **108 Ah** (12 strings × 9 Ah; 84 Ah with 7 Ah blocks); the charge and end-of-discharge values from the battery maker.
2. **Set › Sys Set**: System Mode **Single** for one cabinet (parallel cabinets: see the user manual); **Redundant Modules Qty** (N+X), so that the UPS alarms when redundancy is lost.
3. **Set › Sys Func**: system date and time. **Set › Language**: display language.

Checks — the UPS is in normal mode when:

- the status indicators are steady green and the home page shows no warning (Figure 8-1, item 3);
- the energy flow runs through rectifier and inverter to the output; the status bar shows the right number of modules (N = ...);
- **Module** lists every fitted module and **Log** shows no fault;
- **Cabinet › Battery** shows 20 blocks per string, the battery connected and charging (Figure 8-2).

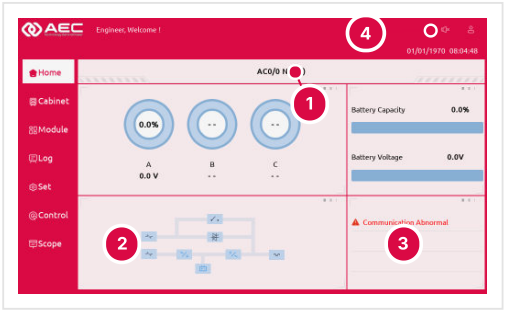

1. Status bar: capacity, number of modules (N = ...), single (S) or parallel (P)
2. Energy flow: bypass, maintenance bypass, main input, rectifier, inverter, battery, output
3. Warnings: red = serious alarm, orange = general alarm
4. Speaker icon: mute the alarm

FIGURE 8-1 Home page

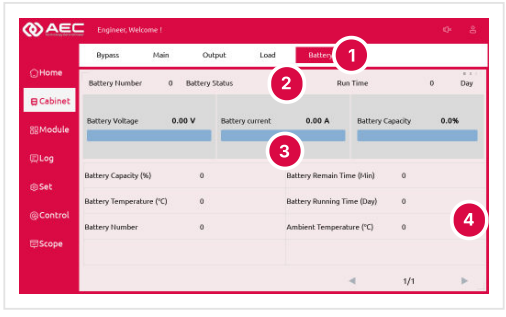

1. Cabinet tabs: Bypass, Main, Output, Load, Battery
2. Battery number per string (20), status (boost / float), run time
3. Battery voltage, current and capacity, positive and negative half
4. Capacity, remaining time, battery and ambient temperature

FIGURE 8-2 Cabinet — Battery

The UPS boost-charges the battery to full, then changes to float charge. Do not rely on the full runtime until **Cabinet › Battery** shows float charge.

9 Maintenance bypass and shutdown

From normal mode to maintenance bypass — check first on the touchscreen that the bypass is normal and the inverters are synchronized with it.

1. **Control › Function › Manual Bypass**. The inverters stop and the static bypass feeds the load. Silence the alarm with the speaker icon (Figure 8-1, item 4).
2. Open the **Battery** breaker.
3. Close the **Maintenance** breaker (Figure 7-1, state D). The maintenance bypass and the static bypass feed the load together.

From maintenance bypass to normal mode

1. Check that the **Input** and **Output** breakers are closed (Figure 7-1, state D). After about 30 s the static bypass closes.
2. Check on the touchscreen that the static bypass feeds the load, then open the **Maintenance** breaker.
3. Wait: the rectifiers start, then the inverters; after about one minute more the UPS transfers to inverter. If the load stays on bypass, select **Control › Function › Ecs Manual Bypass**.
4. Close the **Battery** breaker (Figure 7-1, state C).

> ⚠ ***WARNING***
>
> Open the Maintenance breaker only while the static bypass feeds the load, or the load drops. In maintenance bypass, dangerous voltage stays on the terminals and the internal busbars. To isolate the UPS as well (state E), follow the user manual, section "Isolating the UPS on the maintenance bypass".

Shutting the UPS down completely

1. Shut down the loads correctly.
2. Open the **Battery** breaker.
3. Open the **Input** breaker (or the external main input breaker) and, with a separate bypass feed, the external bypass input breaker. The touchscreen goes dark.
4. Open the **Output** breaker (Figure 7-1, state A). If the UPS was in maintenance bypass, also open the **Maintenance** breaker.

AEC technical support · 24/7
+1 786 553 2100 — WhatsApp and phone

service.us@aecups.com
sales@aecups.com

AEC UPS USA LLC
4872 SW 72nd Ave, Miami, FL 33155 · aecups.com

Parallel systems, settings, alarms, maintenance and every detail: **RADIANT-IB 20–100 kVA User Manual, AEC-UM-RADIB-US** (aecups.com · AEC app › Support › Downloads).