AEC

MODULAR ONLINE UPS · THREE-PHASE 208/120 V

# RADIANT 15–90 kVA

## Quick Installation Guide

From delivery to normal mode. The installer prepares the site, the frame and the wiring; an engineer approved by AEC commissions the UPS. Qualified electricians only. Read every safety message.

RAD90-1X15 ... RAD90-6X15 | RAD90-FRAME | RAD-PWR-15 module

AEC-QG-RAD-US · REV. A · NOVEMBER 2026



**i NOTE** **Who does what.** The installer (a qualified electrician) does steps 1 to 6: site, placing, power modules, breakers and cables to the NEC, terminals, battery and control cables — with every breaker open and no power applied. **An engineer approved by AEC commissions the UPS** (steps 7 and 8): do not apply power before the AEC engineer is on site. Book the commissioning with AEC support when the wiring is finished.

## 1 Safety first

**⚠ DANGER**

**Hazardous voltage.** The utility inputs and the battery are lethal. The battery string is 240 V DC nominal (±120 V to the center tap), more while charging, and stays live when the UPS is off. Before you move or reconnect any cable, open all input breakers and the battery breaker, wait at least 10 minutes and check with a multimeter that the terminals are below 36 V.

**⚠ WARNING**

- Only qualified electricians install and wire the UPS. Do not put the UPS into operation until an engineer approved by AEC has commissioned it: otherwise there is a risk to people, the equipment may malfunction and the warranty is void.
- Ground the UPS and size every conductor and breaker according to the National Electrical Code (NFPA 70) and local codes. Connect the protective earth (PE) first.
- Battery work: remove rings, watches and metal jewelry, wear rubber gloves and eye protection, and use tools with insulated handles. Reversed battery polarity can cause explosion and fire.
- In case of fire, use a dry-chemical (powder) extinguisher only.

## 2 Check the delivery and the site

1. While the frame is still on the truck, inspect it and the shipping container. If damage is apparent, do not install it: file a claim with the carrier and notify AEC.
2. Check the product label: model, capacity and main parameters must match the order.
3. Check the contents: the frame with the bypass module, the touchscreen and the four breakers, on four casters; the power modules ordered (fitted, or packed separately); the user manual.

TABLE 2-1 Site

| Item | Requirement |
|---|---|
| Location | Indoors; cool, dry, clean and ventilated; on a concrete or other non-combustible floor |

| Item | Requirement |
|---|---|
| Temperature · humidity | 32–104 °F (0–40 °C), 68–77 °F (20–25 °C) for maximum battery life · 0–95 % RH, non-condensing |
| Altitude | Full power up to 9,800 ft (3,000 m); above, derate 2 % per 330 ft (100 m), up to 13,100 ft (4,000 m) |
| Floor | Rated for up to 390.5 lb (177.2 kg) for the frame with six modules, plus the battery |
| Battery room | Ventilated according to NFPA 70 Article 480 and IEEE 1635 |

- **Front:** working space at least 36 in (914 mm) deep, 30 in (762 mm) wide or the width of the equipment, and 6.5 ft (1.98 m) high (NEC 110.26(A)). The doors must open fully.
- **Rear:** the power terminals are reached from the rear (terminal box, 33.1 in / 840 mm overall depth) and the air leaves at the rear: keep it accessible and clear. **Top:** keep it free for the air and for top cable entry.
- AEC has not published fixed rear and top distances for this frame: ask AEC when you plan the room.

## 3 Place the frame and fit the power modules

**⚠ *WARNING***

Lifting equipment must be rated for the weight: frame 207.5 lb (94.1 kg), each 15 kVA module 30.5 lb (13.85 kg), up to 390.5 lb (177.2 kg) with six modules. Fit the power modules only after the frame is in its final place: they raise the weight and the center of gravity. On a raised floor, mount the frame on a pedestal designed for its point loading.

1. Roll the frame on its four casters, with care, on a flat floor to its place. Lock the casters.
2. Remove the slot covers for the number of modules ordered.
3. Insert the modules from the bottom slot upward (No. 1 at the bottom, Figure 3-1).
4. Push each module fully in and tighten its fixing screws (Figure 3-2, item 6).
5. Leave the empty slots closed with their covers.

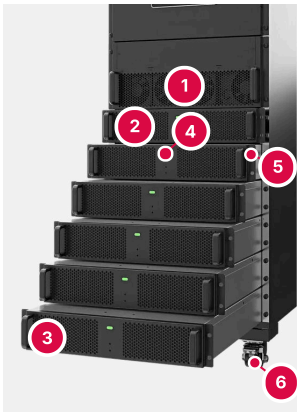


1. Bypass module: one per frame
2. Power module, top slot (No. 6)
3. Power module, bottom slot (No. 1): fit modules from the bottom up
4. Status lamp of the module
5. Mounting ears with the fixing screws
6. Casters

FIGURE 3-1 Bypass module and power modules (drawn out)

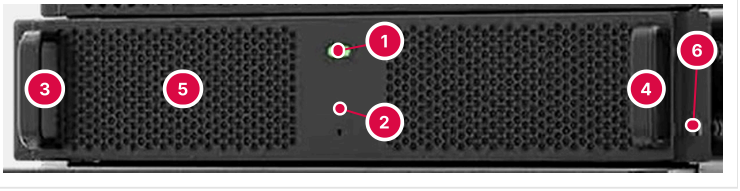


1. Status lamp: green = the module runs
2. OFF key and cold-start button
3. Left handle
4. Right handle
5. Air inlet grille
6. Mounting ear: fixing screws

FIGURE 3-2 Front of a 15 kVA power module (RAD-PWR-15)

## 4 Wire the power

Install breakers upstream of the UPS in the distribution panel, and a DC breaker in the battery circuit (in the external battery cabinet).

- The UPS is a continuous load: every overcurrent device is at least **125 % of the continuous current** (NEC 215.2, 215.3), rounded up to the next standard rating (NEC 240.6).
- Use 3-pole breakers; the neutral is not switched. Main input and bypass input must share the same neutral.
- With a split bypass (separate bypass supply), the main input and the bypass input each need their own breaker.
- Breakers with ground-fault (RCD) protection are not recommended on the UPS feeds.
- If modules will be added later, size the breakers and cables for the final build.

TABLE 4-1 Currents and external breakers for each build — 208 V

| Build | Modules | Max. input current | Rated bypass / output current | Max. battery current | Main input breaker | Bypass input breaker | Output breaker | Battery breaker (DC) |
|---|---|---|---|---|---|---|---|---|
| 15 kVA | 1 | 53 A | 42 A | 67 A | 70 A | 60 A | 60 A | 90 A |
| 30 kVA | 2 | 106 A | 84 A | 134 A | 150 A | 110 A | 110 A | 175 A |
| 45 kVA | 3 | 159 A | 126 A | 202 A | 200 A | 175 A | 175 A | 300 A |
| 60 kVA | 4 | 213 A | 168 A | 269 A | 300 A | 225 A | 225 A | 350 A |
| 75 kVA | 5 | 265 A | 210 A | 336 A | 350 A | 300 A | 300 A | 450 A |
| 90 kVA | 6 | 318 A | 252 A | 403 A | 400 A | 350 A | 350 A | 600 A |

Currents at 208 V; all AC breakers are 3-pole; the battery current is the maximum, at end of discharge. The maintenance bypass breaker in the frame is 315 A, 3-pole, for every build.

TABLE 4-2 Minimum copper conductors — 75 °C, NEC Table 310.16

| Build | Main input A, B, C, N | Bypass input and output A, B, C, N | Battery +, N, – | Equipment grounding (PE) |
|---|---|---|---|---|
| 15 kVA | 4 AWG [21.2 mm²] | 6 AWG [13.3 mm²] | 3 AWG [26.7 mm²] | 8 AWG [8.4 mm²] |
| 30 kVA | 1/0 AWG [53.5 mm²] | 2 AWG [33.6 mm²] | 2/0 AWG [67.4 mm²] | 6 AWG [13.3 mm²] |
| 45 kVA | 3/0 AWG [85 mm²] | 2/0 AWG [67.4 mm²] | 350 kcmil [177 mm²] | 4 AWG [21.2 mm²] |
| 60 kVA | 350 kcmil [177 mm²] | 4/0 AWG [107 mm²] | 500 kcmil [253 mm²] | 3 AWG [26.7 mm²] |
| 75 kVA | 500 kcmil [253 mm²] | 350 kcmil [177 mm²] | 2 × 4/0 AWG [2 × 107 mm²] | 2 AWG [33.6 mm²] |
| 90 kVA | 600 kcmil or 2 × 3/0 AWG [304 or 2 × 85 mm²] | 500 kcmil [253 mm²] | 2 × 350 kcmil [2 × 177 mm²] | 1/0 AWG [53.5 mm²] |

- Copper, up to three current-carrying conductors in a raceway, 86 °F (30 °C) ambient: correct for other conditions (NEC 310.15). Keep the voltage drop below 3 % on AC runs and 1 % on the battery run (AC runs over about 164 ft / 50 m and battery runs over about 98 ft / 30 m need larger conductors).
- Size the neutral 1.5 to 1.7 times the phase conductor for mainly non-linear loads (the output neutral carries up to 170 %).
- All terminals are M12 studs: torque **248 lb-in (28 N·m)**. Use crimped ring lugs.




1. Terminal box with the rear protective cover
2. Cable entry plates (top entry)

FIGURE 4-1 Where the power terminals are — rear of the frame

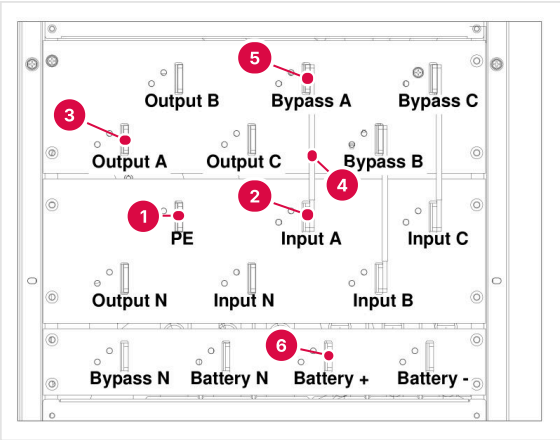


1. **PE** — protective earth: connect first
2. **Main input** — Input A, Input B, Input C, Input N
3. **Output** — Output A, Output B, Output C, Output N
4. Copper links Bypass A–Input A, B–B, C–C (three): they join the two inputs for a single supply. Remove them only for a split bypass.
5. **Bypass input** — Bypass A, Bypass B, Bypass C, Bypass N (split bypass only)
6. **Battery** — Battery +, Battery N, Battery –

FIGURE 4-2 Power terminals, rear view with the rear cover removed — numbers in wire order

TABLE 4-3 Wire order

| Terminal group | Order | Notes |
|---|---|---|
| Main input | A (L1) · B (L2) · C (L3) · N | Clockwise phase rotation A-B-C. |
| Bypass input | A (L1) · B (L2) · C (L3) · N | Same phase rotation as the main input, or the UPS alarms Bypass Sequence Error. Same neutral as the main input. |
| Output | A (L1) · B (L2) · C (L3) · N | 208 V line to line, 120 V line to neutral. |
| Battery | + · N · – | + to the positive end of the string, N to the center tap, – to the negative end. |
| PE | PE | First on and last off. |

**Cables** enter at the rear, from the top or the bottom, through the removable cover plates (bottom entry: fit the rubber cable protector first). Close any remaining opening against rodents.

1. Open every upstream breaker and every breaker in the frame (Figure 7-1, state A). Lock them out and hang warning signs on them.
2. Remove the rear protective cover over the power terminals (top of the rear, on the terminal box: Figure 4-1, item 1).
3. Connect the protective earth (PE) first (Figure 4-2, item 1).
4. Connect the main input cables to Input A, B, C, N (item 2) and the load cables to Output A, B, C, N (item 3).
5. Split bypass only: remove the three links (item 4), then connect the bypass cables to Bypass A, B, C, N (item 5).
6. Connect the battery cables to Battery +, N and – (item 6) — see step 5 of this guide. Leave the battery breaker open.
7. Tighten every lug to 248 lb-in (28 N·m), check the wiring and the phase rotation, then refit the rear cover.

## 5 Connect the battery

The battery bank is external: VRLA, **20, 22 or 24 blocks of 12 V per string** (an even number; 20 is the factory setting), connected as a split string with a center tap: ±120 to ±144 V DC (+, N, –). The battery cabinet has its own breaker. AEC sizes the battery for the runtime you need.

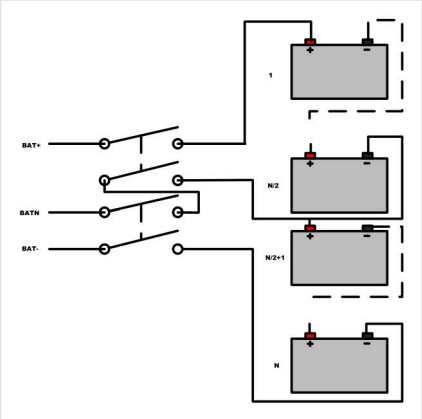


FIGURE 5-1 Battery string: blocks 1 to N/2 between BAT+ and BATN, blocks N/2+1 to N between BATN and BAT−, through the battery breaker

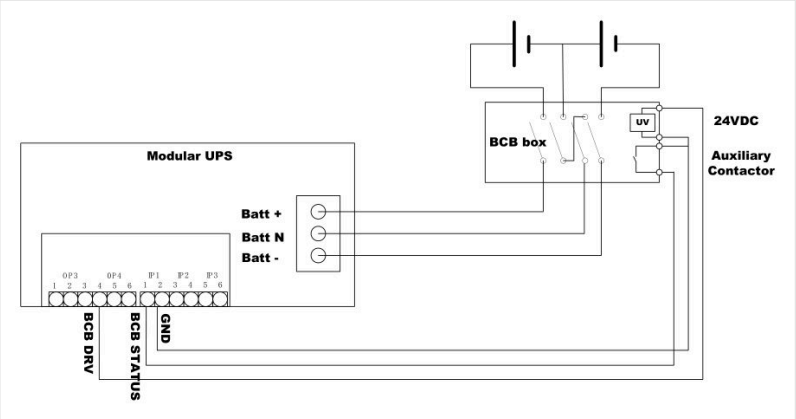


FIGURE 5-2 Battery breaker (BCB) wiring: power cables to Batt +, N, −; trip coil on OP4-4 BCB DRV; auxiliary contact on IP1 BCB STATUS and GND

1. Install the battery in a locked cabinet or battery room open only to qualified personnel. Install the blocks from the bottom shelf upward, fixed against vibration, with at least 0.4 in (10 mm) free on all vertical sides of each block.
2. Use blocks of the same type, capacity and age throughout. Write down the number of blocks per string and the capacity (Ah): the AEC engineer enters them at start-up.
3. Connect the string with its center tap (Figure 5-1). Tighten the block terminals to the battery maker's torque and insulate each terminal.
4. With the battery breaker open and the charging power off, run the cables from the breaker to Battery +, N and − of the UPS (Figure 4-2, item 6). Connect the breaker end of each cable first. Do not cross or bundle the battery cables; bend them no tighter than 10 times their outer diameter.
5. Check with a voltmeter the polarity of every connection and the voltage of each half of the string (+ to N and N to −).
6. Leave the battery breaker **open**: only the AEC engineer closes it.

> ⚠ ***WARNING***
>
> Do not connect any conductor across the positive and negative terminals of a battery. Check that the battery is not accidentally grounded. The number of blocks set on the touchscreen must equal the number installed, or the batteries and the UPS can be seriously damaged.

## 6 Connect the control cables

The communication panel is on the front of the bypass module (Figure 3-1, item 1). Run the communication cables from the front of the frame, away from the power cables.

TABLE 6-1 Control connections

| Connection | How to wire it |
|---|---|
| Remote EPO | As delivered EPO-3 and EPO-4 are linked and EPO-1/EPO-2 open. Use a voltage-free contact: a normally-closed switch in place of the EPO-3/EPO-4 link, or a normally-open switch across EPO-1/EPO-2 (24 V DC, below 20 mA). The remote EPO function is enabled with the monitoring software. |
| Battery breaker (BCB) | Auxiliary contact (normally open) on IP1-1 BCB STATUS and IP1-2 GND; trip coil on OP4-4 BCB DRV (24 V, max. 100 mA) (Figure 5-2). If BCB status is not valid, the UPS reports the battery as not connected. |
| Temperature sensors | TEMP-1 ambient, TEMP-4 battery, TEMP-2 · TEMP-3 common. Sensors specific to the UPS: order them from AEC. |
| Generator | Normally-open auxiliary contact of the generator between IP3-5 (GEN) and IP3-6 (+24 V). |
| Alarm relays | OP1 battery low, OP2 general alarm, OP3 utility failure: NC · NO · common. |
| Monitoring | RS-232 (pin 2 TXD, 3 RXD, 5 GND), RS-485 or USB to UPS View or Modbus; SNMP-M card in the intelligent slot. |

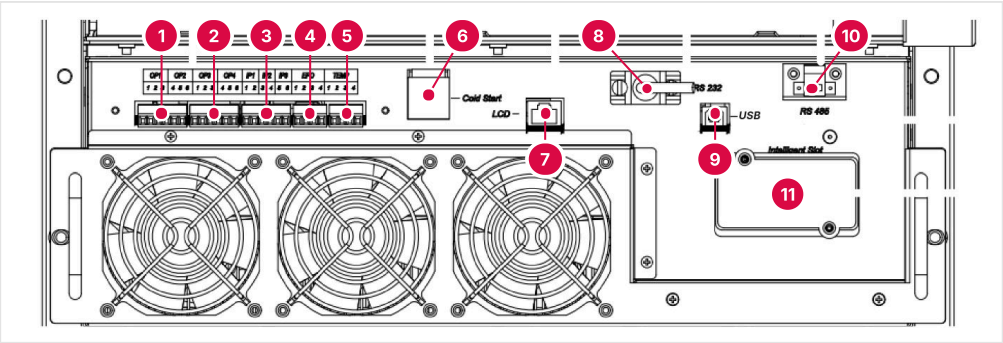


1. OP1 · OP2: battery-low and general alarm relays
2. OP3 · OP4: utility-fail relay and battery breaker trip (BCB DRV)
3. IP1 · IP2 · IP3: BCB status, BCB online, generator input
4. EPO: remote emergency power off input
5. TEMP: ambient and battery temperature sensors
6. Cold-start button (start on battery)
7. LCD: cable to the touchscreen (RJ45) — not a network port
8. RS-232 port (DB9)
9. USB port
10. RS-485 port (terminal)
11. Intelligent slot: SNMP-M network card

FIGURE 6-1 Communication panel on the front of the bypass module

Parallel frames (up to four) need parallel cables, an external maintenance bypass and settings: follow the user manual, section "Parallel system".

## 7 Start the UPS — with the AEC engineer

**NOTICE**

The AEC commissioning engineer performs steps 7 and 8, or directs them on site. Before the engineer arrives, check: casters locked; modules fitted from the bottom up; breakers and conductors as in Table 4-1 and Table 4-2, PE first, 248 lb-in; phase rotation of both inputs; battery polarity checked and battery breaker open; EPO, sensors and cards connected.

**⚠ WARNING**

The output terminals become live. If loads are connected, check with their users that it is safe to apply power; otherwise isolate them from the UPS output.

1. Check that all breakers are open (Figure 7-1, state A) and that the cables are connected with the correct phase rotation.
2. Close the **Bypass** breaker and the **Output** breaker in the frame (Figure 7-1, state B), and the external output breaker.
3. Close the external main input breaker, then the **Input** breaker in the frame (Figure 7-1, state C). You see: the touchscreen starts; the rectifiers start and, after initialization, the static bypass feeds the load.
4. Wait: the inverters start by themselves. After about one minute the UPS transfers from bypass to inverter. You see: green indicator; on the home page the energy flow runs from the main input through rectifier and inverter to the output (Figure 7-2, item 4).
5. Close the external battery breaker. A few minutes later the battery starts charging. You see: **Cabinet › Battery** shows the battery connected and charging (Figure 7-3).




FIGURE 7-1 Breaker states A to E — green ON, gray OFF. The battery breaker is in the battery cabinet.

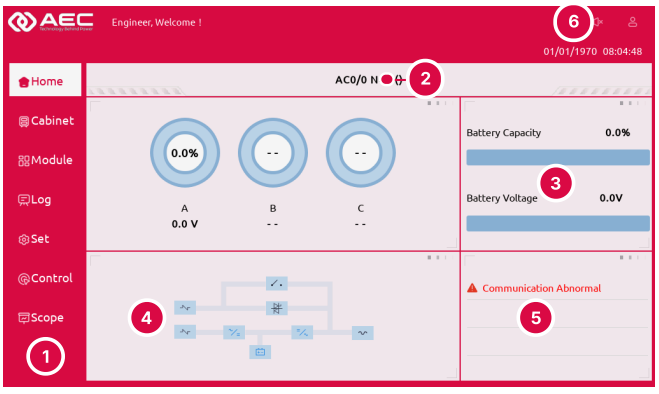


1. Main menu: Home, Cabinet, Module, Log, Set, Control, Scope
2. Status bar: capacity, number of modules (N = ...), single (S) or parallel (P)
3. Battery capacity and voltage bars
4. Energy flow: bypass, maintenance bypass, main input, rectifier, inverter, battery, output
5. Warnings: red = serious alarm, orange = general alarm
6. Speaker icon: mute the alarm

FIGURE 7-2 Home page

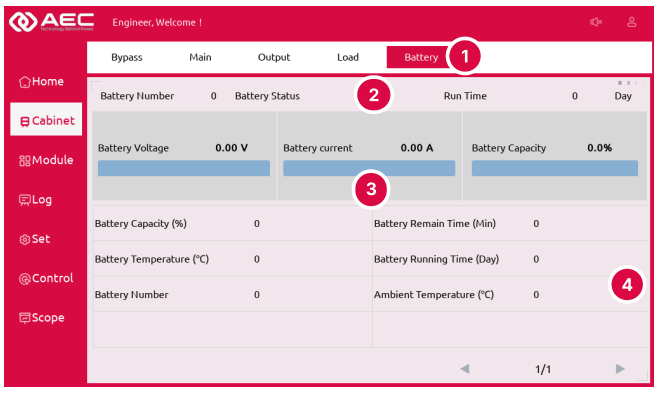


1. Cabinet tabs: Bypass, Main, Output, Load, Battery
2. Battery number per string, status (boost / float), run time
3. Battery voltage, current and capacity, positive and negative half
4. Capacity, remaining time, battery and ambient temperature

FIGURE 7-3 Cabinet — Battery

## 8 Set and check

Settings are protected by login. The AEC engineer makes the battery settings from the battery maker's values.

1. **Set › BATT Set**: Battery Number = the blocks per string installed (20, 22 or 24); Battery Capacity (Ah) of the installed battery; the charge and end-of-discharge values of the battery maker.
2. **Set › Sys Set**: System Mode **Single** for one frame (parallel frames: see the user manual); **Redundant Modules Qty** (N+X), so that the UPS alarms when redundancy is lost.
3. **Set › Sys Func**: system date and time (every log entry carries them). **Set › Language**: display language.
4. Measure the battery voltage and calibrate it on the touchscreen (AEC engineer).

**Checks — the UPS is in normal mode when:**

- the status bars beside the screen are green and the home page shows no warning (Figure 7-2, item 5);
- the energy flow runs through rectifier and inverter to the output; the status bar shows the right number of modules (N = ...);
- **Module** lists every fitted module and **Log** shows no fault;
- **Cabinet › Battery** shows the battery number set, the battery connected and charging (Figure 7-3).

The UPS boost-charges the battery, then changes to float charge. Do not rely on the full runtime until **Cabinet › Battery** shows float charge.

## 9 Maintenance bypass and shutdown

**From normal mode to maintenance bypass** — check first on the touchscreen that the bypass is normal and the inverters are synchronized with it.

1. **Control › Function › Manual Bypass**. Silence the alarm with the speaker icon (Figure 7-2, item 6).
2. Close the **Maintenance** breaker (Figure 7-1, state D). The maintenance bypass and the static bypass feed the load together.
3. **Control › Function › Module Button Power Enable**, then press OFF on each power module.
4. Open the external battery breaker. The power modules can now be serviced.

**From maintenance bypass to normal mode**

1. Check that the **Bypass**, **Input** and **Output** breakers are closed (Figure 7-1, state D).
2. Check on the home page that the static bypass feeds the load, then open the **Maintenance** breaker (Figure 7-1, state C).
3. If the load stays on bypass, select **Control › Function › Ecs Manual Bypass**. After about 60 s the UPS transfers to inverter.
4. Close the external battery breaker.

> ***WARNING***
>
> Open the Maintenance breaker only while the static bypass feeds the load, or the load drops. In maintenance bypass parts of the UPS stay live: wait 10 minutes before you remove a module. Whole frame (state E): user manual, "Isolating the frame on the maintenance bypass".

**Shutting the UPS down completely**

1. Shut down or transfer the loads.
2. Press EPO on the front of the UPS: the output stops.
3. Open the external battery breaker.
4. Open the **Bypass**, **Input** and **Output** breakers (Figure 7-1, state A), and the external breakers.

**AEC technical support · 24/7**
+1 786 553 2100 — WhatsApp and phone
service.us@aecups.com
sales@aecups.com
AEC UPS USA LLC
4872 SW 72nd Ave, Miami, FL 33155 · aecups.com

Parallel systems, settings, alarms, maintenance and every detail: **RADIANT 15–90 kVA User Manual, AEC-UM-RAD-US** (aecups.com · AEC app › Support › Downloads).